Directions for use of Parts Catalogue

1. Applicable model of machines

All component and option parts used for ＮＰ６０ rice transplanters are listed in this parts catalogue.

1) MODEL TYPE

G····· 2-CYLINDER GASOLINE ENGINE OF WATER-COOLED

D····· 3-CYLINDER DIESEL ENGINE

L····· ROTOR

F····· FERTILIZER

2) AREA CODE

E16····· KOREA

2. Explanation for head paragraph

KEY	PART CODE	DESCRIPTION	SPC	TYPE OF MODEL						ITC	COL	GRP	REMARKS
				SSM48M	SSM48F	SSM48G	SRM48M	SRM48F	SRM48G				
1	8595-211-001-20	CASE/UPPER	*	1 -229									
1A	8657-201-081-00	CASE/UPPER	*	1 230-			1						
2	8595-211-002-10	CASE/LOWER	*	1			1						
3	V523-100-801-80	PIN	*	2			2						
4	V211-260-803-00	BOLT, SEMS	*	6			6						
			*	2 -229									
			*	2 230-			2						
				2			2						
				1			1						
										3			

① ② ③ ④ ⑤ ⑥ ⑦ ⑧ ⑨

① KEY shows the location of parts diagramed in the illustration.

② Parts numbers begin with `V´ and `W´ are standard parts of the market.

③ `LH´ and `RH´ on the parts name are described against the moving direction of the machine or are described on the condition how to install parts on the machines.

④ SPC : The following symbol classifies parts to be used for machines.

`*´ means standard parts.

`T´ shows that the parts can be installed as optional parts.

`R´ shows that the parts can be used as applicable parts to replace originally equipped parts.

⑤ Upper column : QTY shows the number of parts to be used for one unit of machine.

`M´ is indicated for parts supplied by a meter long.

`l´ is indicated for parts supplied by liter.

`AR´ is indicated for parts need to be adjusted or regulated.

Lower column : serial number

—229 means serial number up to 229.

230— means serial number 230 and after.

⑥ ITC : Interchangeability

`1´…OLD ← NEW

New parts can be used in place of the old parts.

`2´…OLD → NEW

Old parts can be used in place of the new parts.

`3´…OLD →← NEW

Old parts and new parts can not be replaced each other.

⑦ COL : Color code

Color is signified with color code number for colored parts.

Please see the color list shown in the next page.

⑧ GRP : Parts shown in this column can be replaced by SET parts.

Example : Parts marked Ⓐ can be replaced by parts marked Ⓑ, and Ⓓ for Ⓒ, so the rest follow in the same alphabetical order.

⑨ Remarks

＊Other maker's part code number is shown in this column.

＊When Fig. No. is shown in the Remark column of SET parts or ASSY parts, each of their component parts are listed in said Fig. No.

3. Color :

The following colors are used color parts.

COLOR CODE	COLOR	SPRAY TYPE PARTS CODE	PAINTS 4K DRUM PARTS CODE	PAINTS 16K DRUM PARTS CODE
4 L	NEO BLUE	1300-985-001-10	1300-985-003-00	1300-985-004-00
5 N	GRAY NO.1	1300-983-001-10	1300-983-003-00	――――
6 G	SUMMER WHITE	1300-958-001-10	1300-958-003-00	1300-958-004-00
7 F	MIRROR BLACK	1300-954-001-10	1300-954-003-00	1300-954-004-00

NOTE : Color code is signified only for the parts assigned by the maker as color parts.

4. Serial Numbers :

1) For engines serial number is stamped on CRANK CASE COMP.
   Please see Fig. No. 1－15.
2) For engines serial number is stamped on ＣＯＶＥＲ/ＣＹＬＩＮＤＥＲ HEAD.
   Please see Fig. No. 2－1.
3) For chassies serial number is shown on the LABEL.
   Please see

5. Parts Order

1) When you order parts, please make sure of correct numbers.
2) When substitute parts is available, the part number ordered will be automatically turned to a new part number.
3) Please be sure to use “ISEKI GENUINE PARTS”.
   Any other similar parts other than ISEKI parts when used may cause a trouble that makes us unable to repair or guarantee the warrant.

*** Structure Table of Model ***

MODEL / FIG.	NP60E16	DLFE16	GLFE16									
1			*									
2		*										
3			*									
4		*										
5			*									
6			*									
7			*									
8		*										
9		*										
10			*									
11		*										
12			*									
13		*										
14		*	*									
15			*									
16		*										
17			*									
18		*										
19			*									
20		*										
21		*	*									
22			*									
23		*										
24			*									
25		*										
26			*									
27		*										
28			*									
29		*										
30		*	*									
31			*									
32		*										
33			*									
34		*										
35		*	*									
36		*	*									
37		*	*									
38		*										
39			*									
40		*	*									
41		*	*									
42		*	*									
43			*									
44		*										
45			*									

*** Structure Table of Model ***

MODEL / FIG.	NP60E16	DLFE16	GLFE16									
46	*											
47	*	*										
48	*											
49			*									
50			*									
51	*											
52	*	*										
53	*	*										
54			*									
55	*											
56	*	*										
57	*	*										
58	*	*										
59	*	*										
60	*	*										
61	*	*										
62			*									
63	*											
64	*	*										
65			*									
66	*											
67			*									
68	*											
69	*	*										
70	*											
71			*									
72	*											
73			*									
74	*	*										
75	*	*										
76			*									
77	*											
78	*											
79			*									
80	*											
81	*	*										
82			*									
83	*											
84	*	*										
85	*	*										
86	*	*										
87	*	*										
88	*	*										
89	*											
90			*									

*** Structure Table of Model ***

MODEL / FIG.	NP60E16	DLFE16	GLFE16									
91	*											
92		*										
93	*	*										
94		*										
95	*											
96	*	*										
97	*	*										
98	*	*										
99	*	*										
100	*	*										
101	*	*										
102	*	*										
103	*	*										
104	*	*										
105	*	*										
106	*	*										
107	*	*										
108	*	*										
109	*	*										
110	*	*										
111	*	*										
112	*	*										
113	*	*										
114	*	*										
115		*										
116	*											
117	*	*										
118	*	*										
119	*	*										
120	*	*										
121	*	*										
122	*	*										
123	*	*										
124	*	*										
125	*	*										
126	*	*										
127	*	*										
128	*	*										
129	*	*										
130	*	*										
131	*	*										
132	*	*										
133	*	*										
134	*	*										
135	*	*										

*** Structure Table of Model ***

MODEL / FIG.	NP60E16	DLFE16	GLFE16									
136	**											
137	**											
138	**											
139	**											
140	**											
141	*											
142	*											
143	*											
144	*											
145	**											
146	**											
147	**											
148	*											
149	*											
150	*											
151	*											
152	**											
153	**											
154	**											

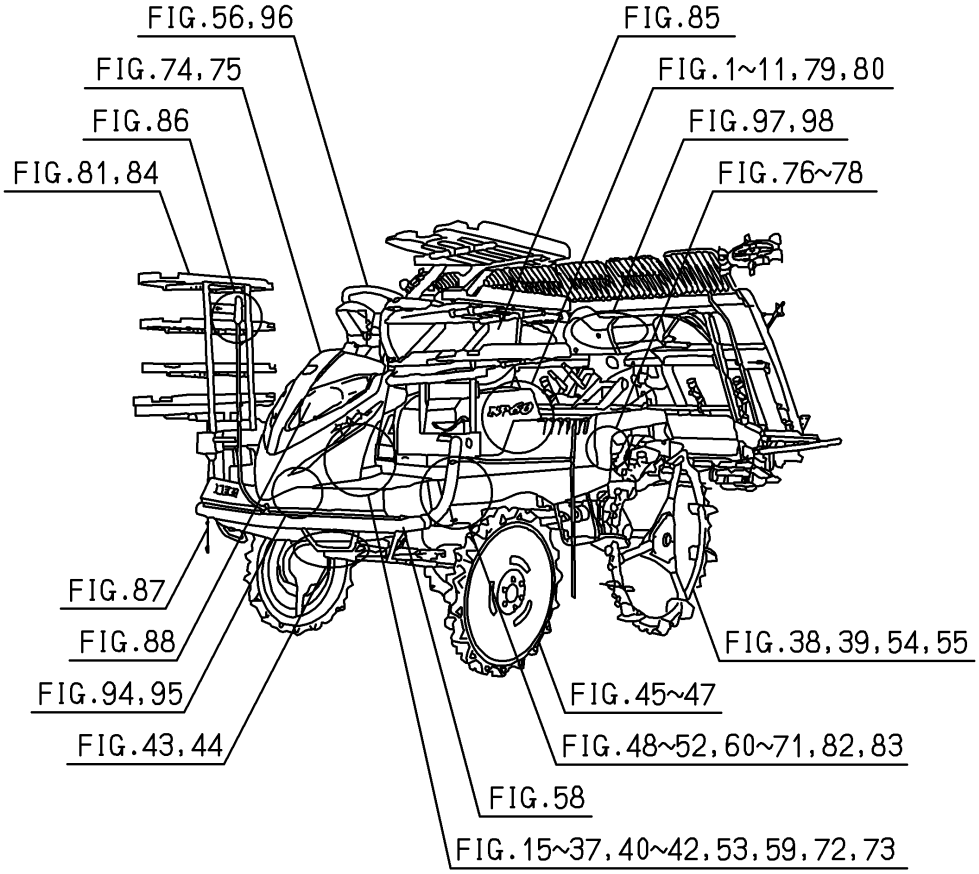
FIG.56,96
FIG.74,75
FIG.86
FIG.81,84
FIG.85
FIG.1~11,79,80
FIG.97,98
FIG.76~78
FIG.87
FIG.88
FIG.94,95
FIG.43,44
FIG.38,39,54,55
FIG.45~47
FIG.48~52,60~71,82,83
FIG.58
FIG.15~37,40~42,53,59,72,73

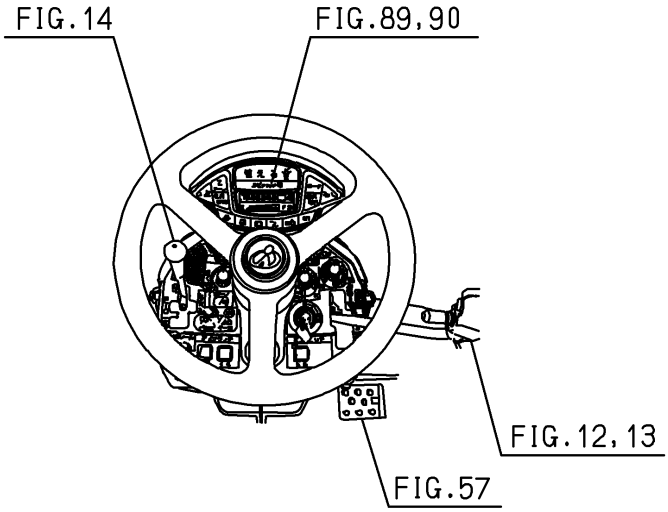
FIG.14
FIG.89,90
FIG.12,13
FIG.57

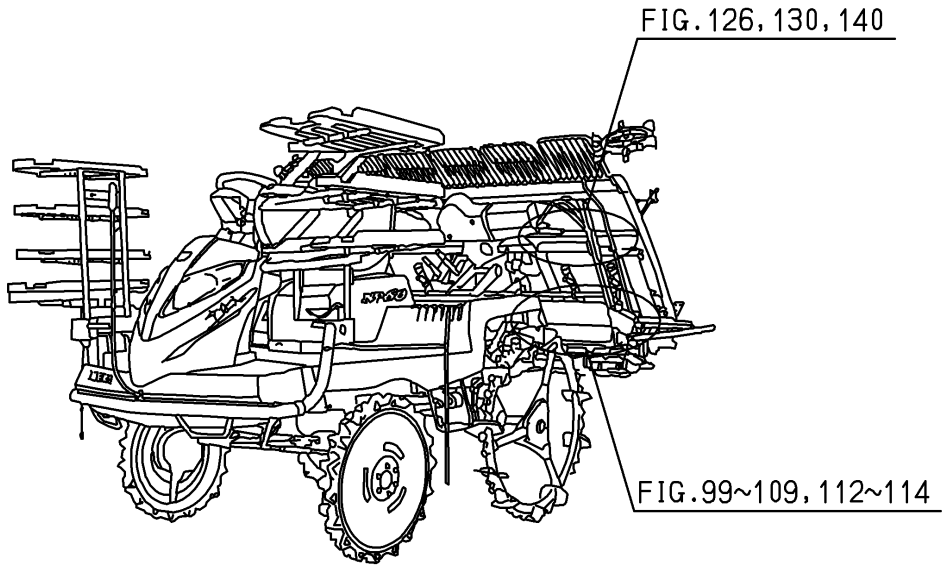
FIG.126,130,140
FIG.99~109,112~114

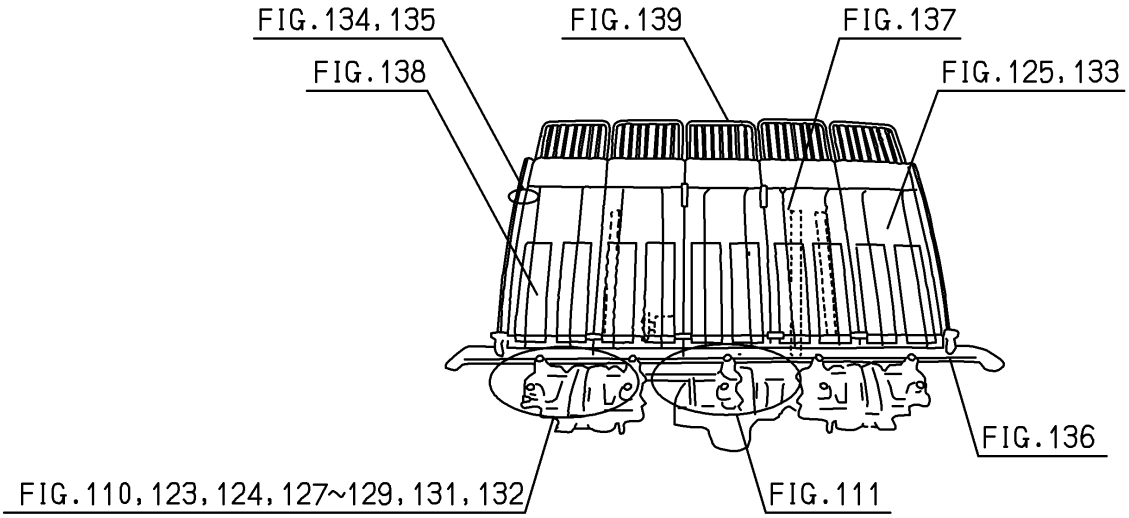
FIG.134,135
FIG.139
FIG.137
FIG.138
FIG.125,133
FIG.136
FIG.110,123,124,127~129,131,132
FIG.111

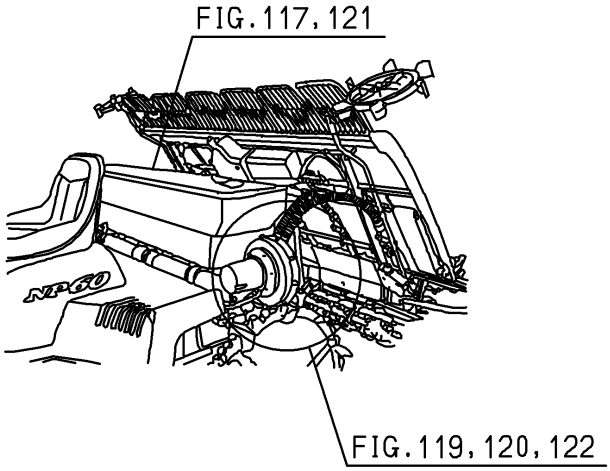
FIG.117,121
FIG.119,120,122

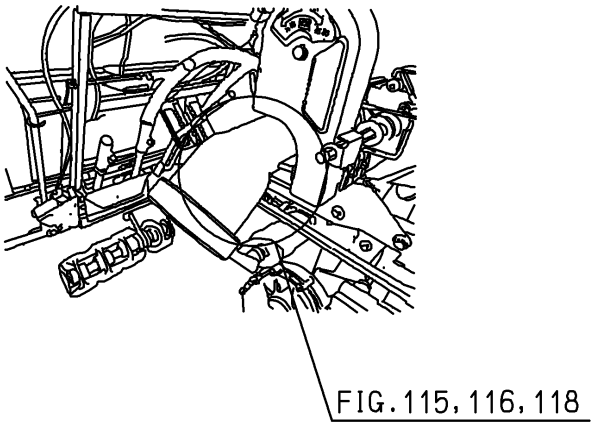
FIG.115,116,118

Contents

NP60E16

ENGINE(FD620D-NB02)

CYLINDER/CRANKCASE····· Fig. 1
PISTON/CRANKSHAFT····· Fig. 2
VALVE/CAMSHAFT····· Fig. 3
LUBRICATION-EQUIPMENT····· Fig. 4
COOLING-EQUIPMENT····· Fig. 5
ELECTRIC-EQUIPMENT····· Fig. 6
CONTROL-EQUIPMENT····· Fig. 7
CARBURETOR····· Fig. 8
AIR-FILTER/MUFFLER····· Fig. 9
FUEL-TANK/FUEL-VALVE····· Fig. 10
STARTER····· Fig. 11

Contents

NP60E16

ENGINE(E3112-UP03)

CYLINDER HEAD····· Fig. 1
CYLINDER HEAD COVER····· Fig. 2
INLET MANIFOLD····· Fig. 3
EXHAUST MANIFOLD····· Fig. 4
CYLINDER BLOCK····· Fig. 5
BEARING/UNDER SIZE (OPTION)····· Fig. 6
OIL PAN····· Fig. 7
REAR PLATE····· Fig. 8
TIMING GEAR CASE····· Fig. 9
HANGER····· Fig. 10
VALVE····· Fig. 11
CAM SHAFT····· Fig. 12
PISTON····· Fig. 13
PISTON/OVER SIZE (OPTION)····· Fig. 14
CRANK SHAFT····· Fig. 15
OIL PUMP····· Fig. 16
WATER PUMP····· Fig. 17
COOLING FAN····· Fig. 18
INJECTION NOZZLE····· Fig. 19
INJECTION PUMP····· Fig. 20
FUEL PIPE····· Fig. 21
ADAPTER····· Fig. 22
ELECTRIC (1)····· Fig. 23
ELECTRIC (2)····· Fig. 24

REPAIR PARTS(OPTION)……Fig. 25
COMPONENT PARTS
FOR 6215-300-036-10 ON Fig.19……Fig. 26
COMPONENT PARTS
FOR 6215-600-156-20 ON Fig.20……Fig. 27
COMPONENT PARTS
FOR 6281-100-014-00 ON Fig.23……Fig. 28

Contents

CHASSIS

MUFFLER SYSTEM(G TYPE)····· Fig. 1
GUIDE(HARNESS/ENGINE)SYSTEM(D TYPE)····· Fig. 2
RADIATOR SYSTEM(G TYPE)····· Fig. 3
RADIATOR SYSTEM(D TYPE)····· Fig. 4
GENERATOR SYSTEM(G TYPE)····· Fig. 5
BASE(ENGINE)SYSTEM(G TYPE)····· Fig. 6
PULLEY(ENGINE)SYSTEM(G TYPE)····· Fig. 7
PULLEY(ENGINE)SYSTEM(D TYPE)····· Fig. 8
STAY(ARM/TENSION)SYSTEM(D TYPE)····· Fig. 9
TANK(FUEL)SYSTEM(G TYPE)····· Fig. 10
TANK(FUEL)SYSTEM(D TYPE)····· Fig. 11
LEVER(HST)SYSTEM(G TYPE)····· Fig. 12
LEVER(HST)SYSTEM(D TYPE)····· Fig. 13
LEVER(CHANGE)SYSTEM····· Fig. 14
HST SYSTEM(G TYPE)····· Fig. 15
HST SYSTEM(D TYPE)····· Fig. 16
LINK(HST)SYSTEM(G TYPE)····· Fig. 17
LINK(HST)SYSTEM(D TYPE)····· Fig. 18
PEDAL(ACCELERATOR)SYSTEM(G TYPE)····· Fig. 19
PEDAL(ACCELERATOR)SYSTEM(D TYPE)····· Fig. 20
CASE(TRANSMISSION)SYSTEM····· Fig. 21
SHAFT(INPUT)SYSTEM(G TYPE)····· Fig. 22
SHAFT(INPUT)SYSTEM(D TYPE)····· Fig. 23
SHAFT(COUNTER)SYSTEM(G TYPE)····· Fig. 24
SHAFT(COUNTER)SYSTEM(D TYPE)····· Fig. 25
SHAFT(CHANGE)SYSTEM(G TYPE)····· Fig. 26
SHAFT(CHANGE)SYSTEM(D TYPE)····· Fig. 27

SHAFT(OUTPUT)SYSTEM(G TYPE)……Fig. 28
SHAFT(OUTPUT)SYSTEM(D TYPE)……Fig. 29
SHAFT(DRIVE/FRONT)SYSTEM……Fig. 30
SHAFT(DRIVE/PLANTING)SYSTEM(G TYPE)……Fig. 31
SHAFT(DRIVE/PLANTING)SYSTEM(D TYPE)……Fig. 32
SHAFT
(PLANTING INTERVAL/OUT)SYSTEM(G TYPE)……Fig. 33
SHAFT(PLANTING/OUT)SYSTEM(D TYPE)……Fig. 34
SHIFTER(CHANGE)SYSTEM……Fig. 35
LEVER(PLANTING INTERVAL)SYSTEM……Fig. 36
SHAFT(DIFF-LOCK)SYSTEM……Fig. 37
WHEEL(REAR)SYSTEM(D TYPE)……Fig. 38
WHEEL(REAR)SYSTEM(G TYPE)……Fig. 39
STEERING SYSTEM……Fig. 40
ROD(TIE)SYSTEM……Fig. 41
TURN SYSTEM……Fig. 42
CASE(FINAL)SYSTEM(G TYPE)(1/2)(2/2)……Fig. 43
CASE(FINAL)SYSTEM(D TYPE)(1/2)(2/2)……Fig. 44
WHEEL(FRONT)SYSTEM(G TYPE)……Fig. 45
WHEEL(FRONT)SYSTEM(D TYPE)……Fig. 46
CAP(WHEEL/FRONT)SYSTEM……Fig. 47
FRAME(MAIN)SYSTEM(D TYPE)……Fig. 48
FRAME(MAIN)SYSTEM(G TYPE)……Fig. 49
SHAFT(DRIVE/REAR)SYSTEM(G TYPE)……Fig. 50
SHAFT(DRIVE/REAR)SYSTEM(D TYPE)……Fig. 51
SHAFT(PLANTING)SYSTEM……Fig. 52
SHAFT(BRAKE)SYSTEM……Fig. 53
CASE(REAR)SYSTEM(G TYPE)(1/2)(2/2)……Fig. 54
CASE(REAR)SYSTEM(D TYPE)(1/2)(2/2)……Fig. 55
WHEEL(STEERING)SYSTEM……Fig. 56
PEDAL(BRAKE)SYSTEM……Fig. 57
BUMPER SYSTEM……Fig. 58
PUMP SYSTEM……Fig. 59

CYLINDER SYSTEM ..... Fig. 60
PIPING SYSTEM ..... Fig. 61
ARM(CYLINDER)SYSTEM(G TYPE) ..... Fig. 62
ARM(CYLINDER)SYSTEM(D TYPE) ..... Fig. 63
ACCUMULATOR SYSTEM ..... Fig. 64
LINK(LOWER)SYSTEM(G TYPE) ..... Fig. 65
LINK(LOWER)SYSTEM(D TYPE) ..... Fig. 66
LINK(UPPER)SYSTEM(G TYPE) ..... Fig. 67
LINK(UPPER)SYSTEM(D TYPE) ..... Fig. 68
CLUTCH(PLANTING)SYSTEM ..... Fig. 69
VALVE SYSTEM(D TYPE) ..... Fig. 70
VALVE SYSTEM(G TYPE) ..... Fig. 71
POWER ASSIST(STEERING)SYSTEM(D TYPE) ..... Fig. 72
POWER ASSIST(STEERING)SYSTEM(G TYPE) ..... Fig. 73
HOOD SYSTEM ..... Fig. 74
HOOD(REAR)SYSTEM ..... Fig. 75
STEP(MAIN)SYSTEM(G TYPE) ..... Fig. 76
STEP(MAIN)SYSTEM(D TYPE) ..... Fig. 77
STEP(SIDE)SYSTEM(D TYPE) ..... Fig. 78
COVER(ENGINE)SYSTEM(G TYPE) ..... Fig. 79
COVER(ENGINE)SYSTEM(D TYPE) ..... Fig. 80
TRAY(SEEDLING/SUB)SYSTEM ..... Fig. 81
STAY
(FRAME/SEEDLING/SUB)SYSTEM(G TYPE) ..... Fig. 82
STAY
(FRAME/SEEDLING/SUB)SYSTEM(D TYPE) ..... Fig. 83
MIRROR(BACK)SYSTEM ..... Fig. 84
SEAT SYSTEM ..... Fig. 85
MARKER(CENTER)SYSTEM ..... Fig. 86
MARKER(SIDE)SYSTEM ..... Fig. 87
LAMP(HEAD)SYSTEM ..... Fig. 88
PANEL(MONITOR)SYSTEM(D TYPE)(1/2)(2/2) ..... Fig. 89
PANEL(MONITOR)SYSTEM(G TYPE)(1/2)(2/2) ..... Fig. 90

HARNESS
(TRAVELING SECTION)SYSTEM(D TYPE)····· Fig. 91
HARNESS
(TRAVELING SECTION)SYSTEM(G TYPE)····· Fig. 92
HARNESS(PLANTING SECTION)SYSTEM····· Fig. 93
BATTERY SYSTEM(G TYPE)····· Fig. 94
BATTERY SYSTEM(D TYPE)····· Fig. 95
CONTROLLER(FRONT)SYSTEM····· Fig. 96
CONTROLLER(REAR)SYSTEM····· Fig. 97
CLUTCH(PLANTING)SYSTEM····· Fig. 98
DRIVE(ROTOR)SYSTEM····· Fig. 99
ROTOR SYSTEM····· Fig.100
CONTROL(DEPTH/ROTOR)SYSTEM····· Fig.101
CASE(CHAIN)SYSTEM(1/2)(2/2)····· Fig.102
LIFT SYSTEM····· Fig.103
STOPPER(ROLLING)SYSTEM····· Fig.104
FRAME(PLANTING)SYSTEM····· Fig.105
LINK(FLOAT)SYSTEM····· Fig.106
LINK(FLOAT)SYSTEM····· Fig.107
CAM(LEAD)SYSTEM····· Fig.108
CAM(SEEDLING)SYSTEM····· Fig.109
LEVER(DEPTH/PLANTING)SYSTEM····· Fig.110
FLOAT(CENTER)SYSTEM····· Fig.111
ADJUSTMENT(ROLLING)SYSTEM····· Fig.112
AUTOMATIC(ROLLING)SYSTEM····· Fig.113
RAKE SYSTEM····· Fig.114
DRIVE(FERTILIZER)SYSTEM(G TYPE)(1/2)(2/2)····· Fig.115
DRIVE(FERTILIZER)SYSTEM(D TYPE)(1/2)(2/2)····· Fig.116
HARNESS&SENSOR(FERTILIZER)SYSTEM····· Fig.117
AIR CHAMBER SYSTEM(1/2)(2/2)····· Fig.118
FRAME(FERTILIZER)SYSTEM(1/2)(2/2)····· Fig.119
SEND OUT(FERTILIZER)SYSTEM(1/3)-(3/3)····· Fig.120
HOPPER SYSTEM(FERTILIZER)SYSTEM····· Fig.121

PIPING(FERTILIZER)SYSTEM Fig.122
FRAME(SIDE)SYSTEM Fig.123
DRIVE(PLANTING)SYSTEM Fig.124
LUBRICATION(SLIDER)SYSTEM Fig.125
FRAME(TANK/SEEDLING)SYSTEM Fig.126
LEVER(PICKING/SEEDLING)SYSTEM Fig.127
FLOAT(SIDE)SYSTEM Fig.128
MARKER SYSTEM Fig.129
GUARD(PLATE/FRONT)SYSTEM Fig.130
PLANTER(LH)SYSTEM Fig.131
PLANTER(RH)SYSTEM Fig.132
TANK(SEEDLING)SYSTEM Fig.133
REFLECTOR SYSTEM Fig.134
WINKER SYSTEM Fig.135
PLATE(FRONT)SYSTEM Fig.136
HOLDER(SEEDLING)SYSTEM Fig.137
FEED(SEEDLING)SYSTEM Fig.138
EXTENSION(TANK/SEEDLING)SYSTEM Fig.139
SENSOR
(STOPPER/TANK/SEEEDLING)SYSTEM Fig.140
LABEL(CAUTION)(D TYPE) Fig.141
LABEL(CAUTION)(G TYPE) Fig.142
ORNAMENT&LABEL(G TYPE) Fig.143
ORNAMENT&LABEL(D TYPE) Fig.144
LABEL(PLANTING INTERVAL) Fig.145
LABEL(FERTILIZER) Fig.146
ACCESSORIES(FERTILIZER) Fig.147
ACCESSORIES(G TYPE) Fig.148
ACCESSORIES(D TYPE) Fig.149

COMPONENT PARTS

COMPONENT PARTS
FOR K510-021-000-20 ON Fig.15 ..... Fig.150

COMPONENT PARTS
FOR K510-022-000-00 ON Fig.16 ····· Fig.151
COMPONENT PARTS
FOR 2204-738-440-40 ON Fig.131(1/2)(2/2) ····· Fig.152
COMPONENT PARTS
FOR 2204-739-440-40 ON Fig.132(1/2)(2/2) ····· Fig.153
COMPONENT PARTS
FOR 2232-686-250-40 ON Fig.121 ····· Fig.154

WIRING DIAGRAM

WIRING DIAGRAM(1/5)
WIRING DIAGRAM(2/5)
WIRING DIAGRAM(3/5)
WIRING DIAGRAM(4/5)
WIRING DIAGRAM(5/5)

E N G I N E

FD620DNB02···NP60(G-TYPE)

5402-097-110-00

FIG. 1 CYLINDER/CRANKCASE

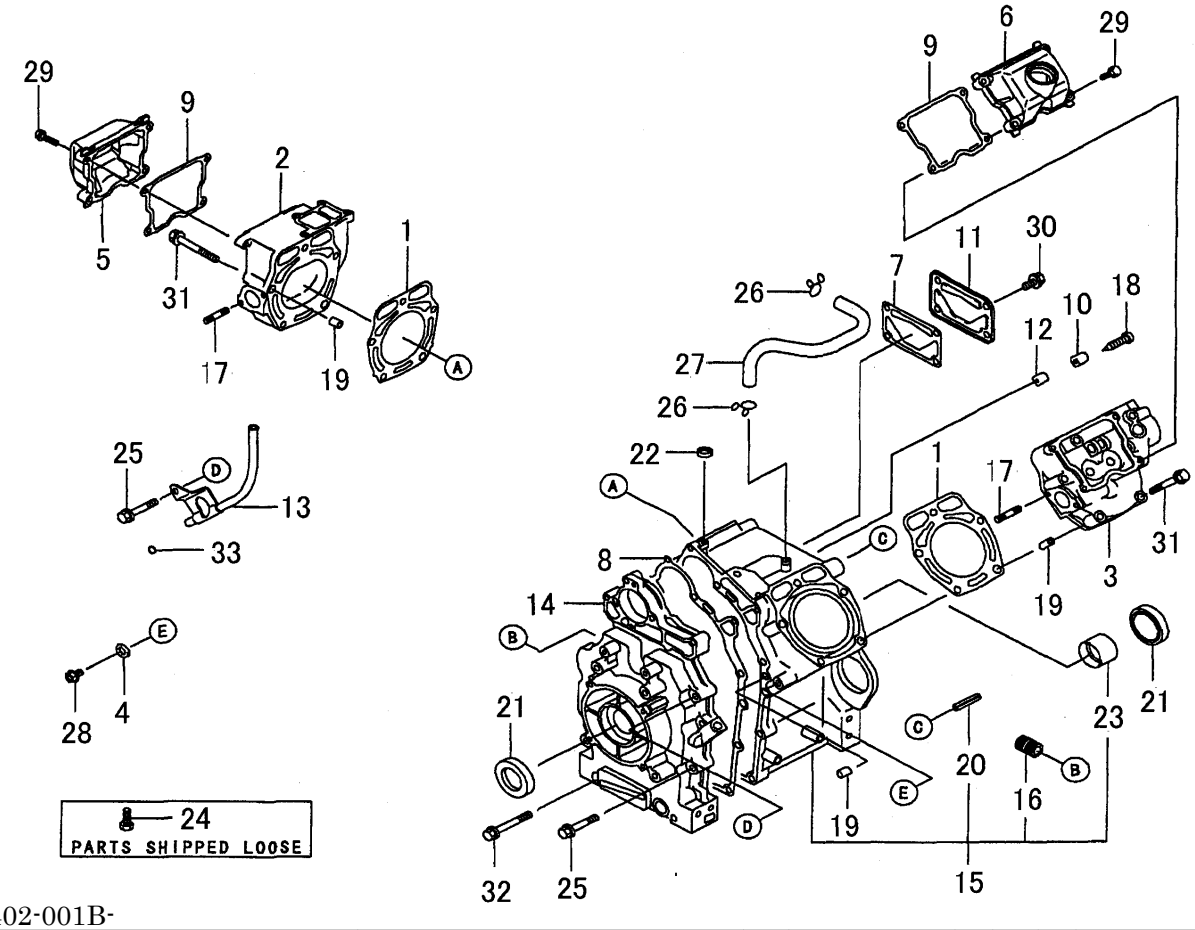

5402-001B-

KEY	PART CODE	DESCRIPTION	SPC	TYPE OF MODEL FD602D	NB02	ITC	COL	GRP	REMARKS
1	5110-042-107-XX	GASKET,HEAD	*	2					110042107
2	5110-080-830-XX	HEAD COMP CYLINDER	*	1					110080830
3	5110-086-047-XX	HEAD COMP CYLINDER	*	1					110086047
4	5110-093-028-XX	GASKET,8.2X12X1	*	2					110093028
5	5110-222-081-XX	CASE-ROCKER	*	1					110222081
6	5110-222-082-XX	CASE-ROCKER	*	1					110222082
7	5110-602-089-XX	GASKET,BREATHER,COVE	*	1					110602089
8	5110-602-449-XX	GASKET,CRANKCASE COV	*	1					110602449
9	5110-612-199-XX	GASKET,CASE-ROCKER	*	2					110612199
10	5132-712-054-XX	PLATE	*	1					132712054
11	5140-242-292-XX	COVER	*	1					140242292
12	5161-262-146-XX	VALVE	*	1					161262146
13	5215-120-329-HX	PIPE,OIL GAUGE	*	1					3215120329H
14	5490-156-310-XX	COVER-CRANKCASE	*	1					490156310
15	5491-200-840-XX	CRANKCASE-COMP	*	1					491200840
16	5590-717-025-XX	JOINT	*	1					590717025
17	5920-042-142-XX	STUD	*	4					920042142
18	5920-092-308-XX	SCREW	*	1					920092308
19	5920-431-037-XX	PIN	*	6					920431037
20	5920-432-227-XX	PIN	*	1					920432227
21	5920-492-112-XX	SEAL OIL	*	2					920492112
22	5920-492-255-XX	SEAL-OIL,VC 8X12X2.5	*	1					920492255
23	5921-412-122-XX	BEARING-PLATE	*	1					921412122
24	5921-512-067-XX	BOLT	*	2					921512067
25	5921-532-130-XX	BOLT,8X45	*	6					921532130
26	5921-702-002-XX	CLAMP	*	2					921702002
27	5921-922-054-XX	TUBE	*	1					921922054
28	5130-AB0-812-XX	BOLT-FLANGED,8X12	*	2					130AB0812
29	5130-BA0-625-XX	BOLT-FLANGED,6X25	*	8					130BA0625
30	5130-BA0-816-XX	BOLT-FLANGED,8X16	*	4					130BA0816

FIG. 1 CYLINDER/CRANKCASE

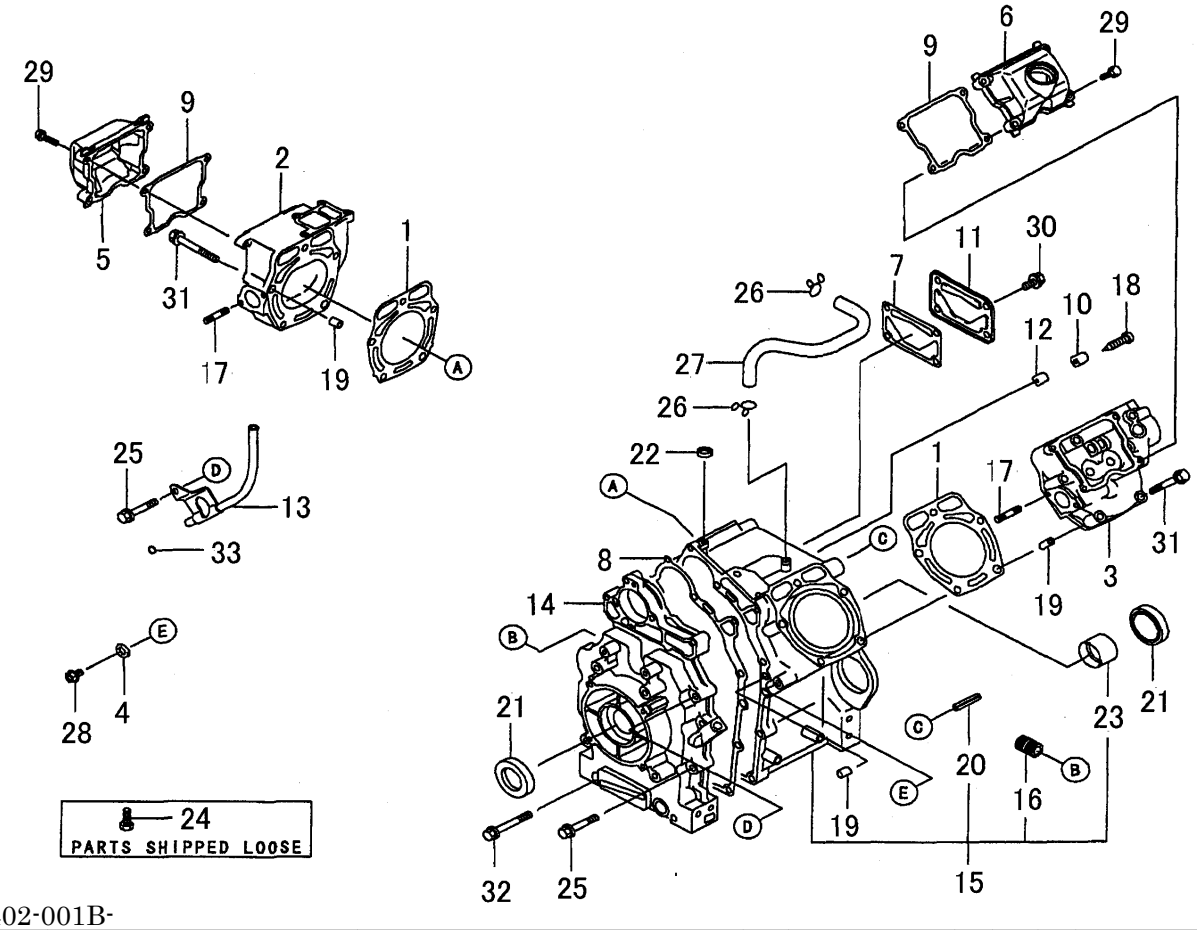

5402-001B-

KEY	PART CODE	DESCRIPTION	SPC	TYPE OF MODEL FD602D NB02		ITC	COL	GRP	REMARKS
31	5130-BA0-865-XX	BOLT-FLANGED,8X65	*	10					130BA0865
32	5130-CA0-860-XX	BOLT-FLANGED,8X60	*	2					130CA0860
33	5670-B20-10X-XX	O RING,10MM	*	1					670B2010

FIG. 2 PISTON/CRANKSHAFT

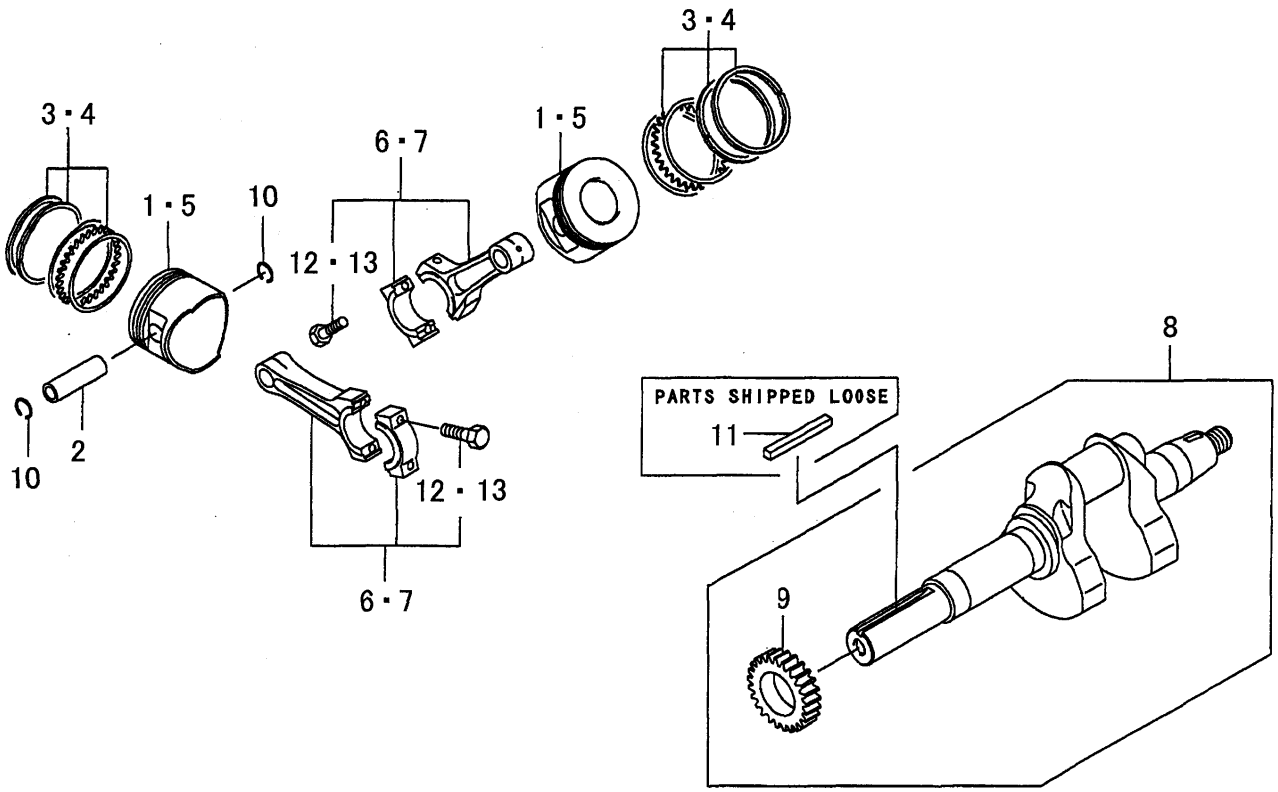

5402-002B-

KEY	PART CODE	DESCRIPTION	SPC	TYPE OF MODEL FD602D	NB02	ITC	COL	GRP	REMARKS
1	5130-012-204-XX	PISTON-ENGINE	*	2					130012204
2	5130-021-013-XX	PIN-PISTON	*	2					130021013
3	5130-086-025-XX	RING SET	*	2					130086025
4	5130-256-008-XX	RING PISTON SET	*	AR					130256008
5	5130-292-131-XX	PISTON,ENGINE/L 0.50	*	AR					130292131
6	5132-510-034-XX	ROD-ASSY CONNECTING	*	2					132510034
7	5132-510-042-XX	ROD-ASSY CONNECTING	*	AR					132510042
8	5491-190-005-XX	CRANKSHAFT ASSY	*	1					491190005
9	5590-510-746-XX	GEAR/SPUR	*	1					590510746
10	5920-360-21X-XX	RING-SNAP	*	4					92036021
11	5920-382-103-XX	KEY	*	1					920382103
12	5921-532-054-XX	BOLT,7X35.2	*	AR					921532054
13	5921-532-054-XX	BOLT,7X35.2	*	4					921532054

FIG. 3 VALVE/CAMSHAFT

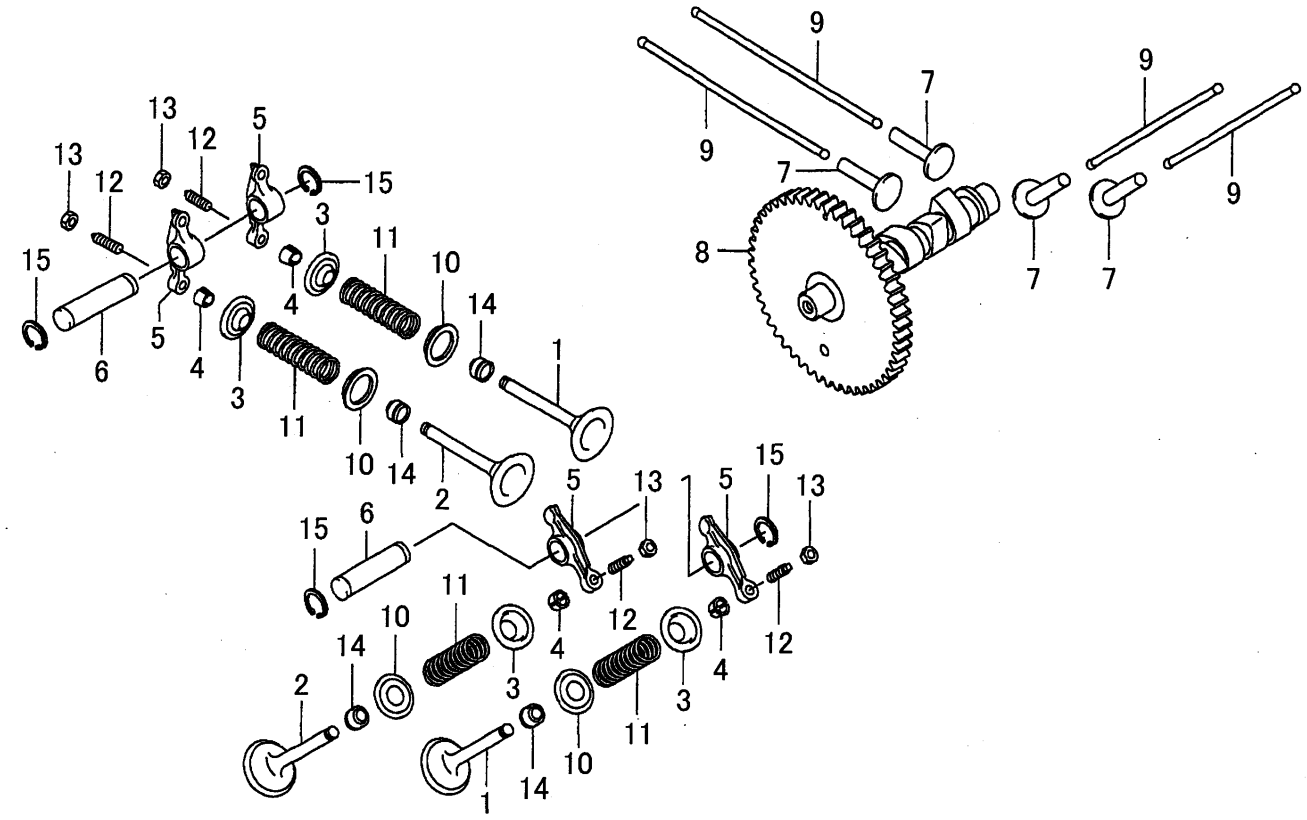

5402-003B-

KEY	PART CODE	DESCRIPTION	SPC	TYPE OF MODEL FD602D NB02		ITC	COL	GRP	REMARKS
1	5120-042-115-XX	VALVE-INTAKE	*	2					120042115
2	5120-052-093-XX	VALVE,EXHAUST	*	2					120052093
3	5120-092-067-XX	RETAINER,VALVE SPRIN	*	4					120092067
4	5120-112-056-XX	COLLET	*	8					120112056
5	5120-162-056-XX	ARM-ROCKER	*	4					120162056
6	5120-202-059-XX	SHAFT-ROCKER	*	2					120202059
7	5120-322-064-XX	TAPPET	*	4					120322064
8	5120-440-803-XX	CAMSHAFT,VALVE	*	1					120440803
9	5131-160-713-XX	ROD-PUSH	*	4					131160713
10	5391-082-057-XX	RETAINER,SPRING	*	4					391082057
11	5490-782-082-XX	SPRING	*	4					490782082
12	5920-091-109-XX	SCREW	*	4					920091109
13	5920-151-137-XX	NUT	*	4					920151137
14	5920-492-109-XX	SEAL-OIL	*	4					920492109
15	5480-J12-00X-XX	RING SNAP/S12	*	4					480J1200

FIG. 4 LUBRICATION-EQUIPMENT

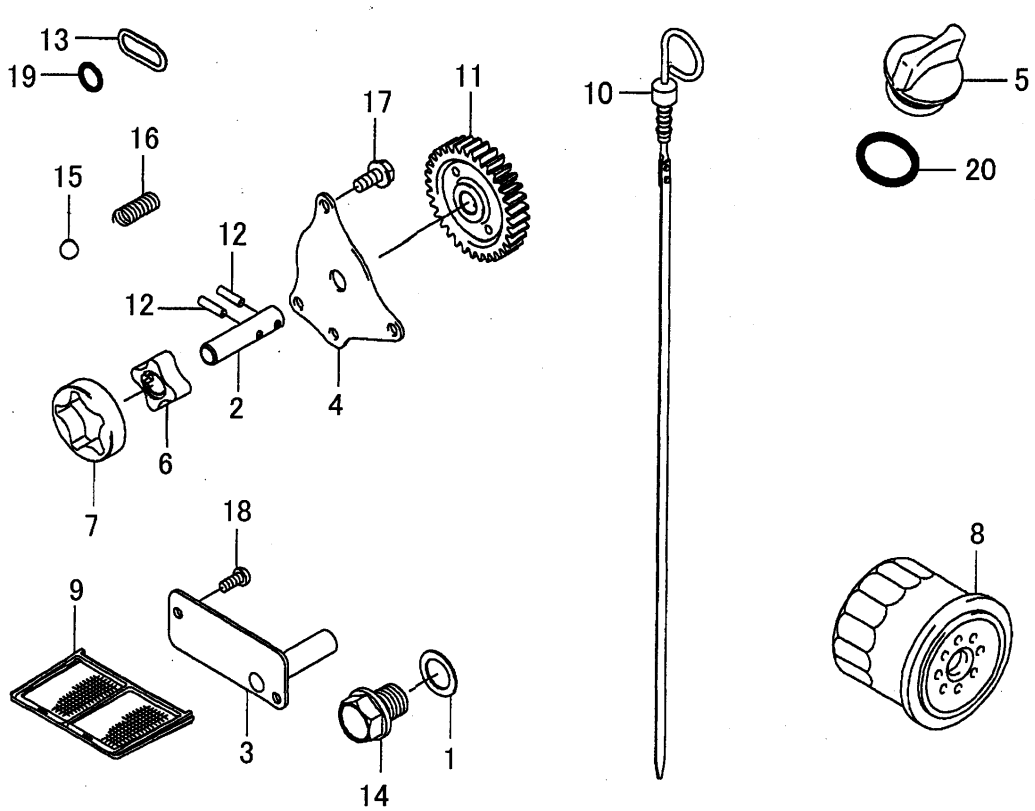

5402-004B-

KEY	PART CODE	DESCRIPTION	SPC	TYPE OF MODEL FD602D	NB02	ITC	COL	GRP	REMARKS
1	5110-092-566-XX	GASKET,DRAIN PLUG	*	1					110092566
2	5131-072-296-XX	SHAFT,OIL PUMP	*	1					131072296
3	5131-832-419-XX	PLATE	*	1					131832419
4	5140-242-113-XX	COVER,OIL PUMP	*	1					140242113
5	5161-152-126-XX	CAP-OIL FILLER	*	1					161152126
6	5161-542-053-XX	ROTOR-PUMP,IN	*	1					161542053
7	5161-542-054-XX	ROTOR,PUMP	*	1					161542054
8	5490-652-071-XX	FILTER OIL	*	1					490652071
9	5490-652-072-XX	FILTER/OIL	*	1					490652072
10	5520-052-122-XX	GAUGE	*	1					520052122
11	5590-512-114-XX	GEAR-SPUR	*	1					590512114
12	5920-420-14X-XX	PIN	*	2					92042014
13	5920-552-086-XX	RING-O	*	1					920552086
14	5920-662-099-XX	PLUG,DRAIN	*	1					920662099
15	5921-407-003-XX	BALL	*	1					921407003
16	5921-452-132-XX	SPRING	*	1					921452132
17	5130-BA0-612-XX	BOLT-FLANGED,6X12	*	3					130BA0612
18	5214-AA0-512-XX	SCREW	*	2					214AA0512
19	5670-B20-11X-XX	O RING,11MM	*	1					670B2011
20	5670-B30-25X-XX	O RING,25MM	*	1					670B3025

FIG. 5 COOLING-EQUIPMENT

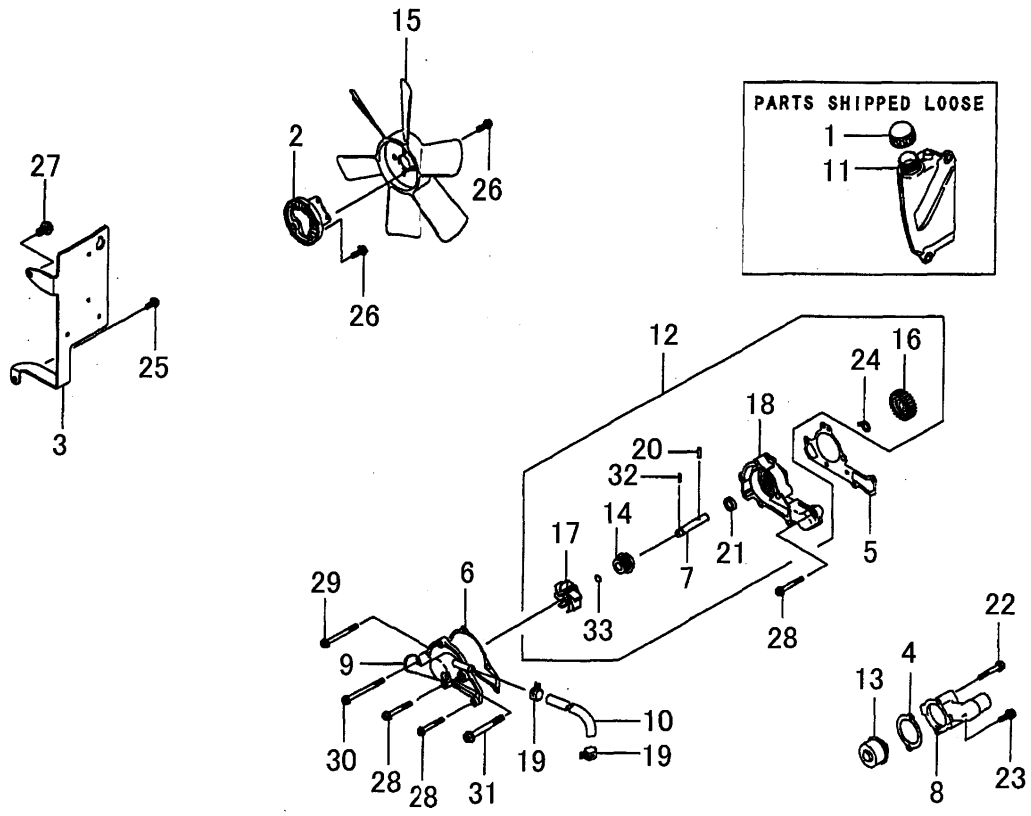

5402-005B-

KEY	PART CODE	DESCRIPTION	SPC	TYPE OF MODEL FD602D NB02		ITC	COL	GRP	REMARKS
1	5110-121-084-XX	CAP	*	1					110121084
2	5110-482-039-XX	BRACKET,COOLINF FAN	*	1					110482039
3	5110-562-996-9H	BRACKET	*	1					1105629969H
4	5110-602-084-XX	GASKET,THERMOSTAT CO	*	1					110602084
5	5110-602-450-XX	GASKET,PUMP CASE	*	1					110602450
6	5110-602-451-XX	GASKET,PUMP COVER	*	1					110602451
7	5131-072-097-XX	SHAFT	*	1					131072097
8	5140-912-102-XX	COVER	*	1					140912102
9	5161-420-714-XX	COVER-PUMP	*	1					161420714
10	5390-622-051-XX	HOSE-COOLING	*	1					390622051
11	5430-782-055-XX	RESERVOIR	*	1					430782055
12	5490-442-066-XX	PUMP-WATER	*	1					490442066
13	5490-542-056-XX	THERMOSTAT	*	1					490542056
14	5490-631-056-XX	SEAL-MECHANICAL	*	1					490631056
15	5590-412-084-XX	FAN,COOLING	*	1					590412084
16	5590-512-113-XX	GEAR-SPUR	*	1					590512113
17	5592-562-057-XX	IMPELLER	*	1					592562057
18	5593-362-052-XX	CASE-PUMP	*	1					593362052
19	5920-371-181-XX	CLAMP	*	2					920371181
20	5920-420-14X-XX	PIN	*	1					92042014
21	5920-492-111-XX	SEAL,OIL/IS 10X20	*	1					920492111
22	5921-502-230-XX	BOLT,6X40	*	1					921502230
23	5921-502-231-XX	BOLT,6X20	*	1					921502231
24	5922-002-044-XX	WASHER	*	1					922002044
25	5130-BA0-616-XX	BOLT-FLANGED,6X16	*	1					130BA0616
26	5130-BA0-620-XX	BOLT-FLANGED,6X20	*	8					130BA0620
27	5130-BA0-816-XX	BOLT-FLANGED,8X16	*	1					130BA0816
28	5130-CA0-645-XX	BOLT-FLANGED,6X45	*	3					130CA0645
29	5130-CA0-665-XX	BOLT-FLANGED,6X65	*	1					130CA0665
30	5130-CA0-675-XX	BOLT-FLANGED,6X75	*	1					130CA0675

FIG. 5 COOLING-EQUIPMENT

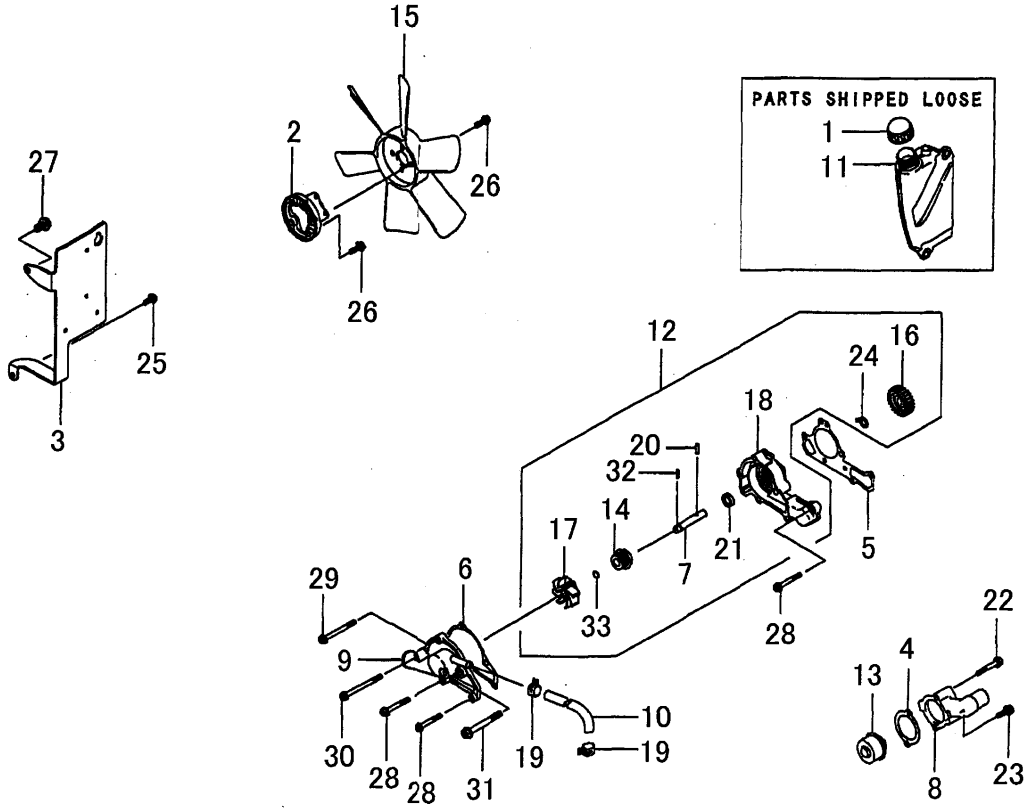

5402-005B-

KEY	PART CODE	DESCRIPTION	SPC	TYPE OF MODEL FD602D NB02		ITC	COL	GRP	REMARKS
31	5130-CA0-870-XX	BOLT-FLANGED,8X70	*	1					130CA0870
32	5551-A03-14X-XX	PIN-DOWEL	*	1					551A0314
33	5670-B15-07X-XX	O RING	*	1					670B1507

FIG. 6 ELECTRIC-EQUIPMENT

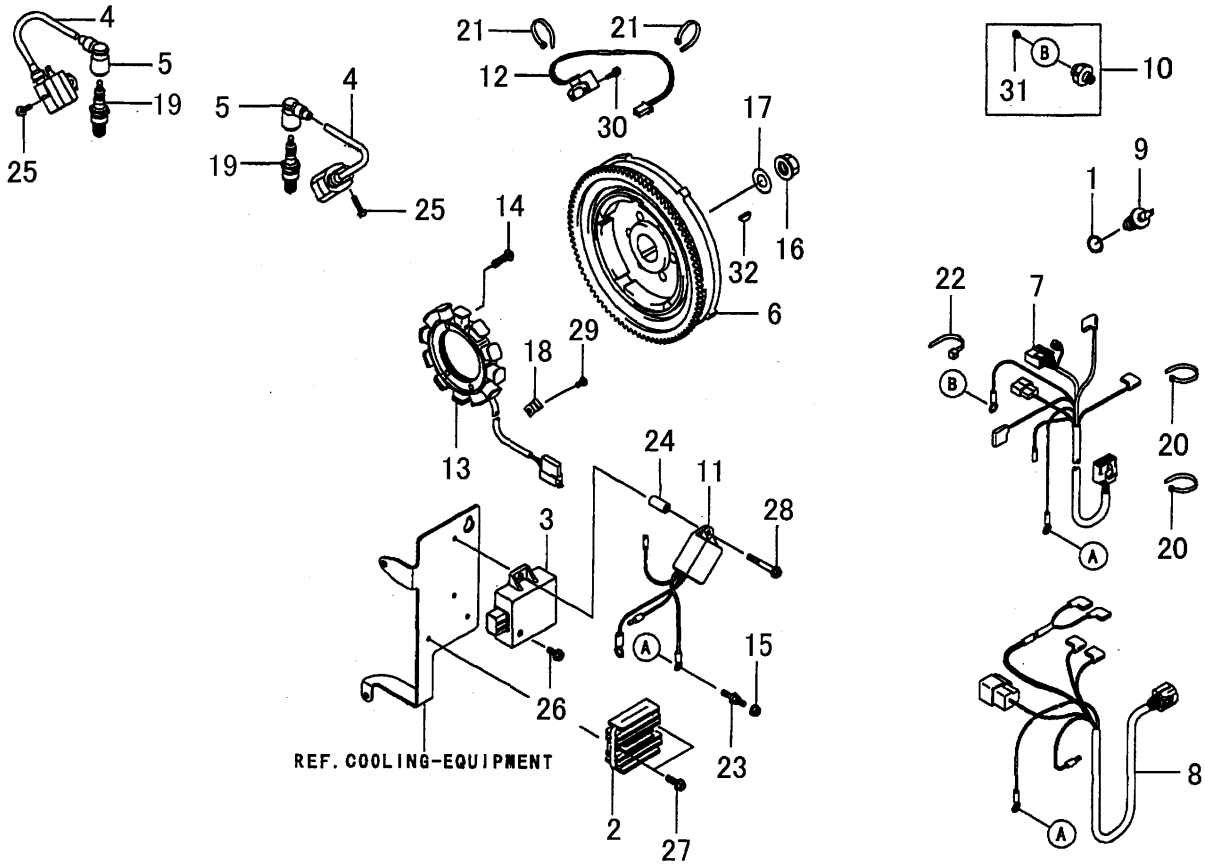

5402-006B-

KEY	PART CODE	DESCRIPTION	SPC	TYPE OF MODEL FD602D	TYPE OF MODEL NB02	ITC	COL	GRP	REMARKS
1	5110-092-766-XX	GASKET,16X24X1	*	1					110092766
2	5210-662-070-XX	REGULATOR,VOLTAGE	*	1					210662070
3	5211-192-160-XX	IGNITOR	*	1					211192160
4	5211-212-094-XX	COIL,IGNITION	*	2					211212094
5	5211-302-060-XX	CAP,SPARK PLUG	*	2					211302060
6	5211-930-008-XX	FLYWHEEL-ASSY	*	1					211930008
7	5260-311-659-XX	HARNESS	*	1					260311659
8	5260-312-058-XX	HARNESS	*	1					260312058
9	5270-102-182-XX	SWITCH	*	1					270102182
10	5270-102-234-XX	SWITCH	*	1					270102234
11	5270-342-058-XX	RELAY	*	1					270342058
12	5590-262-066-XX	COIL,HOUSING	*	1					590262066
13	5590-312-121-XX	COIL,CHARGING	*	1					590312121
14	5920-092-273-XX	SCREW,6X25	*	4					920092273
15	5920-151-367-XX	NUT	*	1					920151367
16	5920-152-167-XX	NUT	*	1					920152167
17	5920-222-245-XX	WASHER	*	1					920222245
18	5920-372-208-XX	CLAMP	*	1					920372208
19	5920-707-004-XX	PLUG-SPARK,BPR4ES(HG	*	2					920707004
20	5920-721-195-XX	BAND	*	2					920721195
21	5920-721-237-XX	BAND	*	2					920721237
22	5920-727-003-XX	BAND	*	1					920727003
23	5921-502-197-XX	BOLT	*	1					921502197
24	5921-521-846-XX	COLLAR,6.3X12X24.5	*	1					921521846
25	5130-AA0-520-XX	BOLT-FLANGED,5X20	*	2					130AA0520
26	5130-BA0-614-XX	BOLT-FLANGED,6X14	*	1					130BA0614
27	5130-BA0-620-XX	BOLT-FLANGED,6X20	*	2					130BA0620
28	5130-CA0-645-XX	BOLT-FLANGED,6X45	*	1					130CA0645
29	5214-AA0-510-XX	SCREW	*	1					214AA0510
30	5225-AA0-414-XX	SCREW	*	2					225AA0414

FIG. 6 ELECTRIC-EQUIPMENT

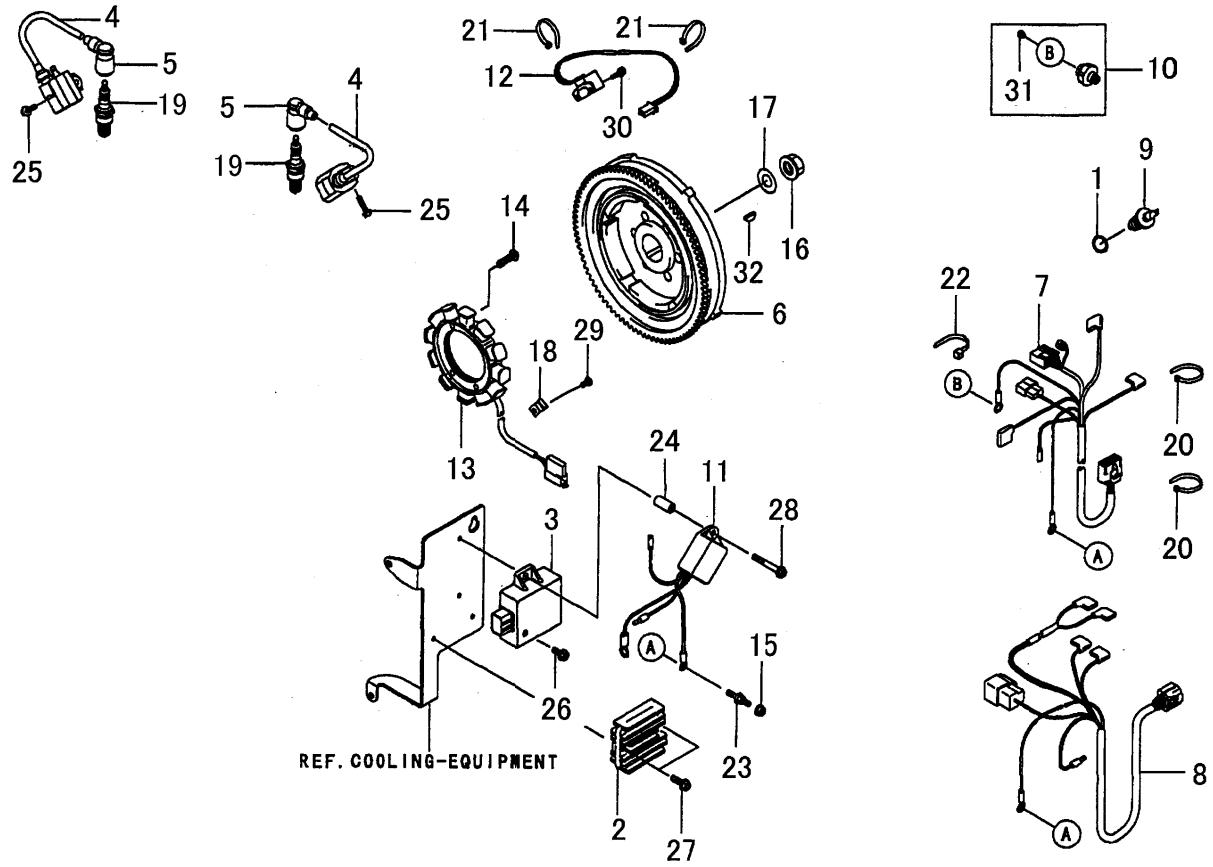

5402-006B-

KEY	PART CODE	DESCRIPTION	SPC	TYPE OF MODEL FD602D NB02		ITC	COL	GRP	REMARKS
31	5241-AA0-406-XX	SCREW-PAN-WP+,4X6	*	1					241AA0406
32	5510-A51-00X-XX	KEY	*	1					510A5100

FIG. 7 CONTROL-EQUIPMENT

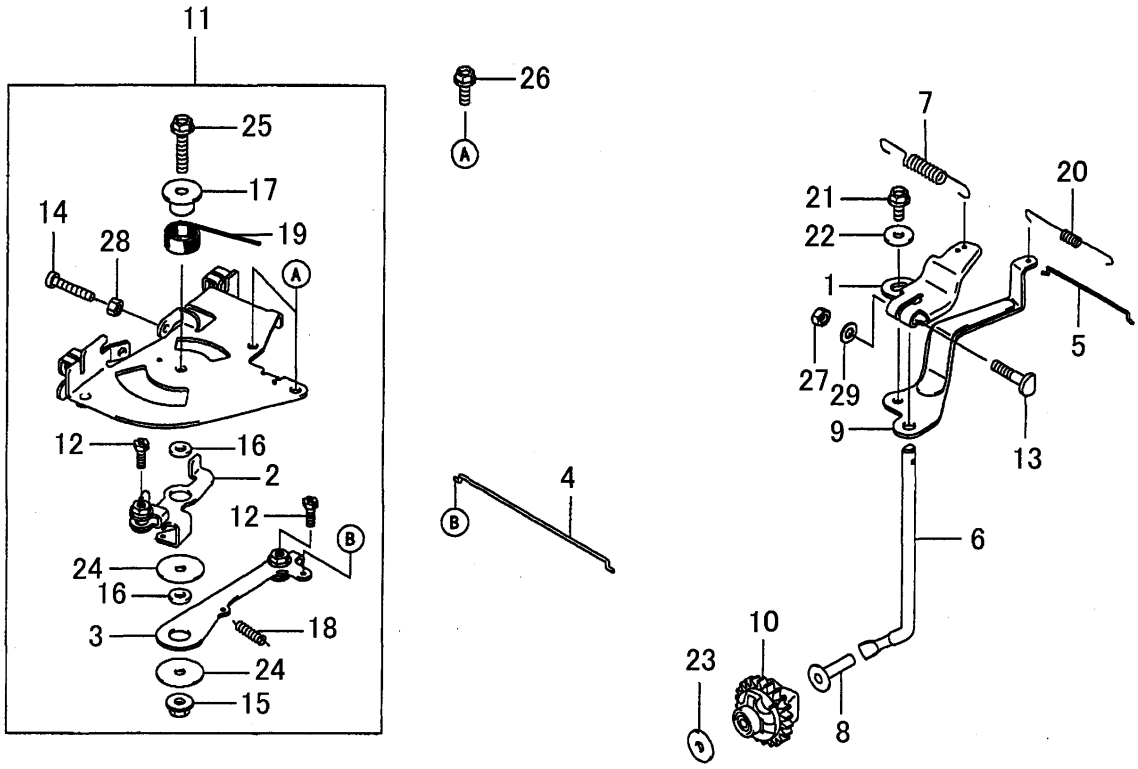

5402-007B-

KEY	PART CODE	DESCRIPTION	SPC	TYPE OF MODEL FD602D NB02		ITC	COL	GRP	REMARKS
1	5110-532-070-XX	BRACKET	*	1					110532070
2	5132-362-163-XX	LEVER-COMP	*	1					132362163
3	5132-362-164-XX	LEVER-COMP	*	1					132362164
4	5161-712-075-XX	LINK	*	1					161712075
5	5161-712-097-XX	LINK	*	1					161712097
6	5390-032-102-XX	ARM-PIVOT	*	1					390032102
7	5391-292-091-XX	SPRING-GOVERNOR	*	1					391292091
8	5420-362-060-XX	SLEAVE	*	1					420362060
9	5491-032-162-XX	ARM-GOVERNOR	*	1					491032162
10	5491-102-093-XX	GOVERNOR-ASSY	*	1					491102093
11	5491-132-178-XX	PANEL-COMP-CONTROL	*	1					491132178
12	5920-022-087-XX	BOLT	*	2					920022087
13	5920-022-269-XX	BOLT,6X8	*	1					920022269
14	5920-092-381-XX	SCREW,5X30	*	2					920092381
15	5920-151-339-XX	NUT	*	1					920151339
16	5921-432-135-XX	COLLAR,6X13X2.3	*	2					921432135
17	5921-432-148-XX	COLLAR	*	1					921432148
18	5921-442-052-XX	SPRING	*	1					921442052
19	5921-452-056-XX	SPRING	*	1					921452056
20	5921-452-125-XX	SPRING	*	1					921452125
21	5921-530-009-XX	BOLT,6X12	*	1					921530009
22	5922-002-035-XX	WASHER	*	1					922002035
23	5922-002-036-XX	WASHER	*	1					922002036
24	5922-002-091-XX	WASHER,6X28X1.6	*	2					922002091
25	5130-AA0-630-XX	BOLT-FLANGED,6X30	*	1					130AA0630
26	5130-BA0-616-XX	BOLT-FLANGED,6X16	*	2					130BA0616
27	5311-AA0-600-XX	NUT-HEX,6MM	*	1					311AA0600
28	5312-AA0-500-XX	NUT-HEX,5MM	*	2					312AA0500
29	5411-AA0-600-XX	WASHER-PLAIN,6MM	*	1					411AA0600

FIG. 8 CARBURETOR

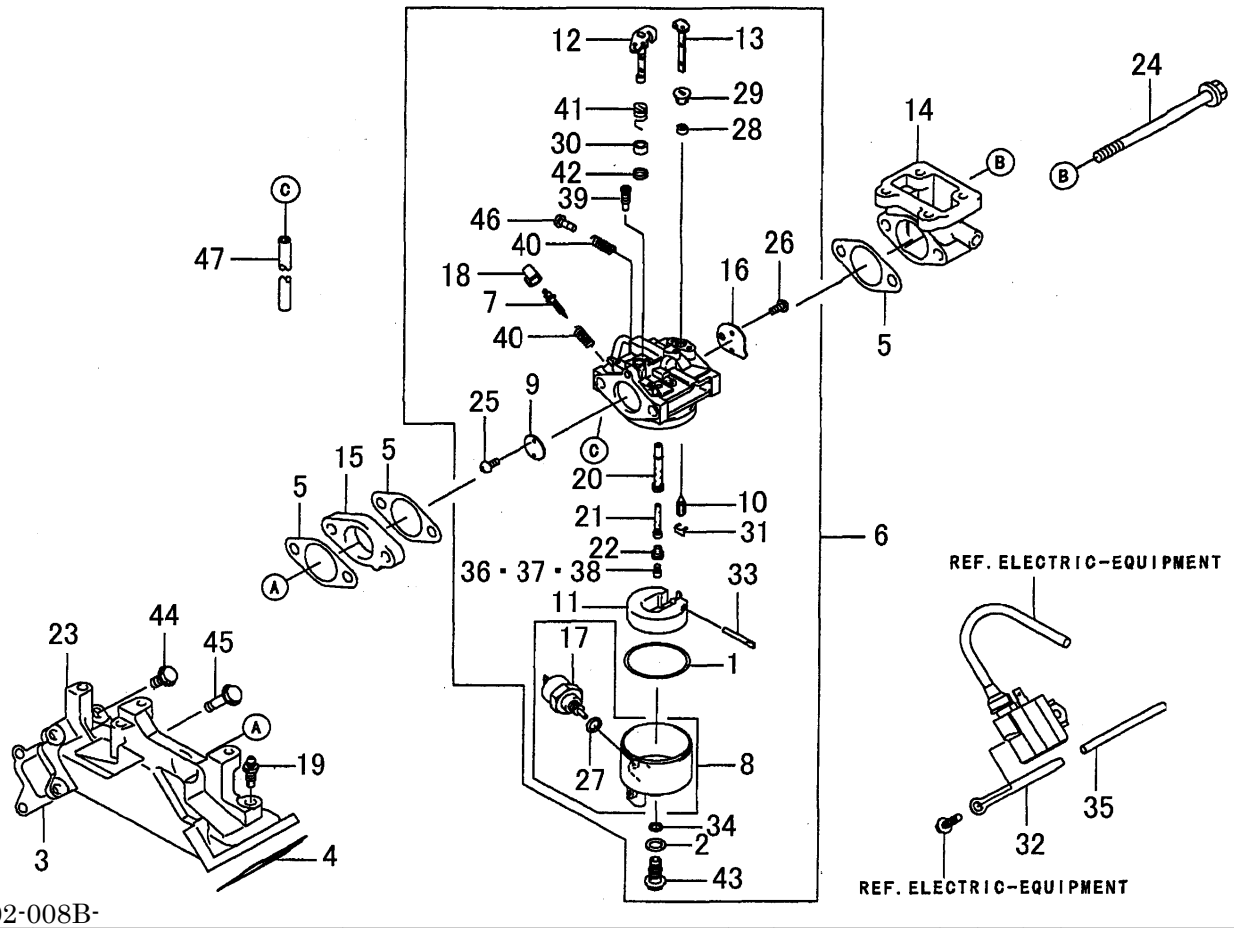

5402-008B-

KEY	PART CODE	DESCRIPTION	SPC	TYPE OF MODEL FD602D NB02		ITC	COL	GRP	REMARKS
1	5110-092-024-XX	GASKET	*	1					110092024
2	5110-092-769-XX	GASKET	*	1					110092769
3	5110-602-087-XX	GASKET,INTAKE MANIFO	*	1					110602087
4	5110-602-088-XX	GASKET,INTAKE MANIFO	*	1					110602088
5	5110-612-119-XX	GASKET	*	3					110612119
6	5150-040-874-XX	CARBURETOR ASSY	*	1					150040874
7	5160-142-075-XX	SCREW-PILOT AIR	*	1					160142075
8	5160-202-140-XX	CHAMBER-FLOAT	*	1					160202140
9	5160-250-020-XX	VALVE-THROTTLE	*	1					160250020
10	5160-302-067-XX	VALVE,FLOAT	*	1					160302067
11	5160-312-066-XX	FLOAT	*	1					160312066
12	5160-412-249-XX	SHAFT-CARBURETOR	*	1					160412249
13	5160-412-259-XX	SHAFT-CARBURETOR	*	1					160412259
14	5160-602-201-XX	PIPE-INTAKE	*	1					160602201
15	5160-732-222-XX	INSULATOR	*	1					160732222
16	5161-260-725-XX	VALVE	*	1					161260725
17	5211-882-009-XX	SOLENOID ASSY	*	1					211882009
18	5390-762-053-XX	LIMITER	*	1					390762053
19	5430-560-008-XX	BREATHER-BRAKE	*	1					430560008
20	5491-210-010-XX	NOZZLE-MAIN	*	1					491210010
21	5491-212-248-XX	NOZZLE-MAIN	*	1					491212248
22	5491-232-083-XX	HOLDER-MAIN JET	*	1					491232083
23	5590-760-011-XX	MANIFOLD-INTAKE	*	1					590760011
24	5920-022-254-XX	BOLT,8X110	*	2					920022254
25	5920-092-080-XX	SCREW	*	2					920092080
26	5920-092-081-XX	SCREW	*	2					920092081
27	5920-222-231-XX	WASHER	*	1					920222231
28	5920-272-003-XX	COLLAR	*	1					920272003
29	5920-272-004-XX	COLLAR	*	1					920272004
30	5920-272-025-XX	COLLAR	*	1					920272025

FIG. 8 CARBURETOR

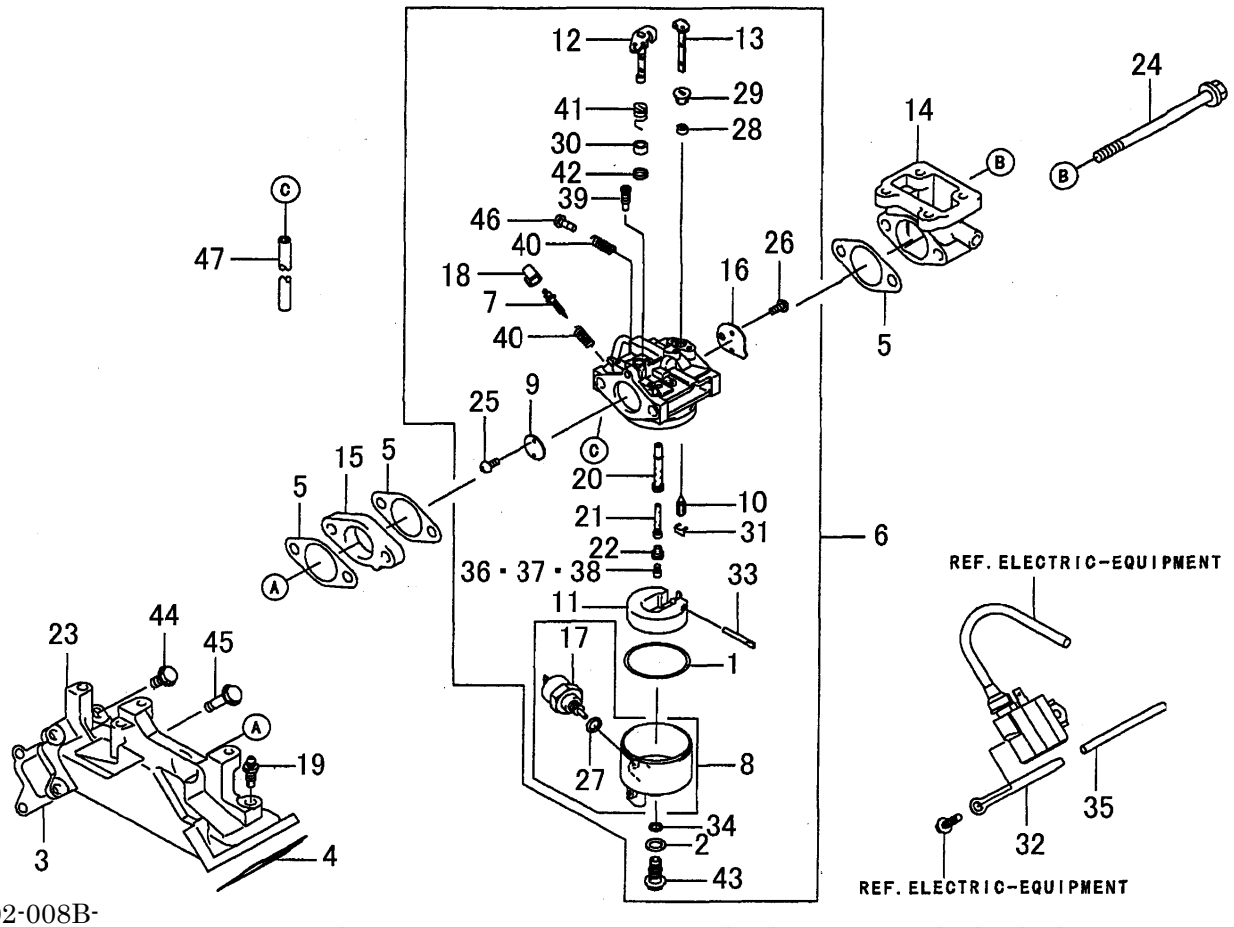

5402-008B-

KEY	PART CODE	DESCRIPTION	SPC	TYPE OF MODEL FD602D NB02		ITC	COL	GRP	REMARKS
31	5920-332-067-XX	RING, SNAP	*	1					920332067
32	5920-372-006-XX	CLAMP	*	1					920372006
33	5920-432-006-XX	PIN	*	1					920432006
34	5920-552-148-XX	O-RONG	*	1					920552148
35	5920-592-011-XX	TUBE,5X6X75	*	1					920592011
36	5920-630-036-XX	JET MAIN,#103.8,3280	*	AR					920630036
37	5920-630-714-XX	JET-MAIN,#101.3	*	AR					920630714
38	5920-632-415-XX	JET MAIN,#106.3	*	1					920632415
39	5920-640-022-XX	JET-PILOT,#37.5	*	1					920640022
40	5920-812-009-XX	SPRING	*	2					920812009
41	5920-812-077-XX	SPRING	*	1					920812077
42	5920-932-002-XX	SEAL	*	1					920932002
43	5921-512-068-XX	BOLT	*	1					921512068
44	5130-BA0-620-XX	BOLT-FLANGED,6X20	*	5					130BA0620
45	5130-CA0-645-XX	BOLT-FLANGED,6X45	*	3					130CA0645
46	5214-AA0-414-XX	SCREW-PAN+-,4X14	*	1					214AA0414
47	5701-Q05-100-0X	TUBE	*	1					701Q051000

FIG. 9 AIR-FILTER/MUFFLER

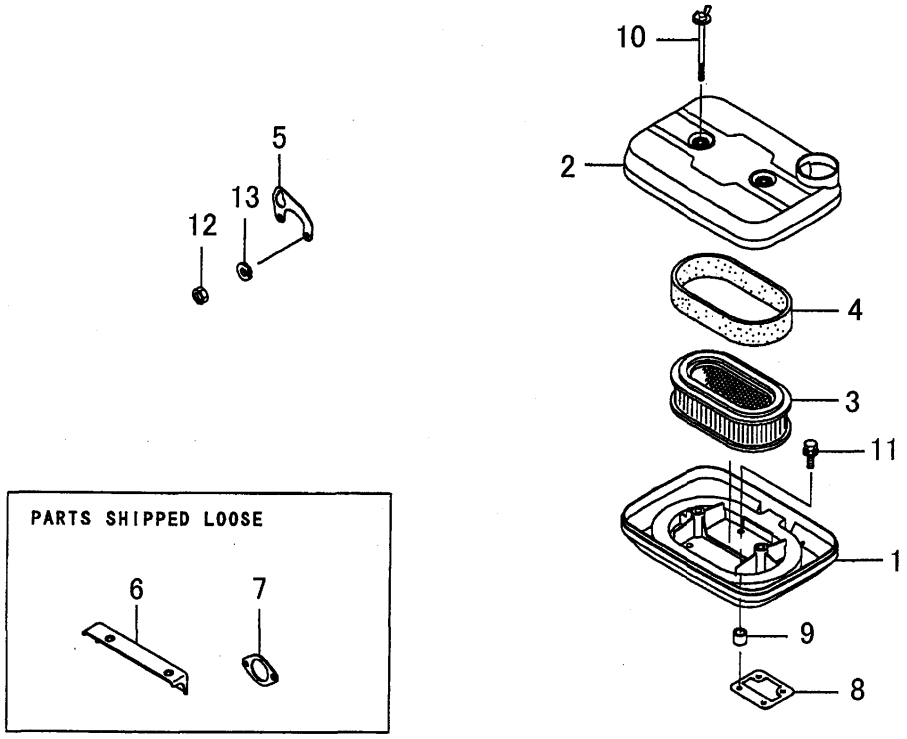

5402-009B-

KEY	PART CODE	DESCRIPTION	SPC	TYPE OF MODEL FD602D NB02		ITC	COL	GRP	REMARKS
1	5110-112-253-XX	CASE-AIR FILTER	*	1					110112253
2	5110-112-254-XX	CASE-AIR FILTER	*	1					110112254
3	5110-130-045-XX	ELEMENT-AIR FILTER	*	1					110130045
4	5110-132-161-XX	ELEMENT,AIR-FILTER	*	1					110132161
5	5110-472-057-9H	BRACKET	*	1					1104720579H
6	5110-472-125-XX	BRACKET	*	1					110472125
7	5110-602-079-XX	GASKET,MUFFLER	*	2					110602079
8	5110-612-118-XX	GASKET	*	1					110612118
9	5921-431-336-XX	COLLAR	*	6					921431336
10	5921-502-285-XX	BOLT	*	2					921502285
11	5187-AA0-520-XX	BOLT	*	6					187AA0520
12	5311-BA0-600-XX	NUT-HEX,6MM	*	1					311BA0600
13	5461-DA0-600-XX	WASHER-SPRING,6MM	*	1					461DA0600

FIG. 10 FUEL-TANK/FUEL-VALVE

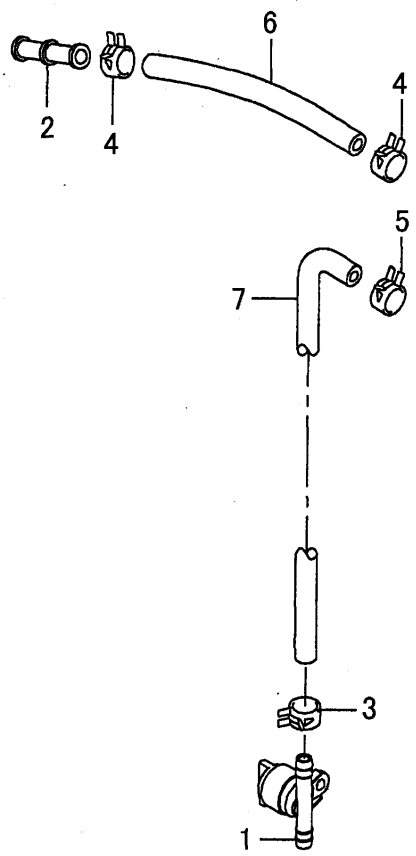

5402-010B-

KEY	PART CODE	DESCRIPTION	SPC	TYPE OF MODEL FD602D NB02		ITC	COL	GRP	REMARKS
1	5510-232-175-XX	TAP ASSY	*	1					510232175
2	5590-712-119-XX	JOINT	*	1					590712119
3	5920-372-001-XX	CLAMP	*	1					920372001
4	5920-372-113-XX	CLAMP	*	2					920372113
5	5921-702-042-XX	CLAMP	*	1					921702042
6	5921-902-139-XX	TUBE 5.8X10.8X140	*	1					921902139
7	5921-912-055-XX	TUBE 5X10X700	*	1					921912055

FIG. 11 STARTER

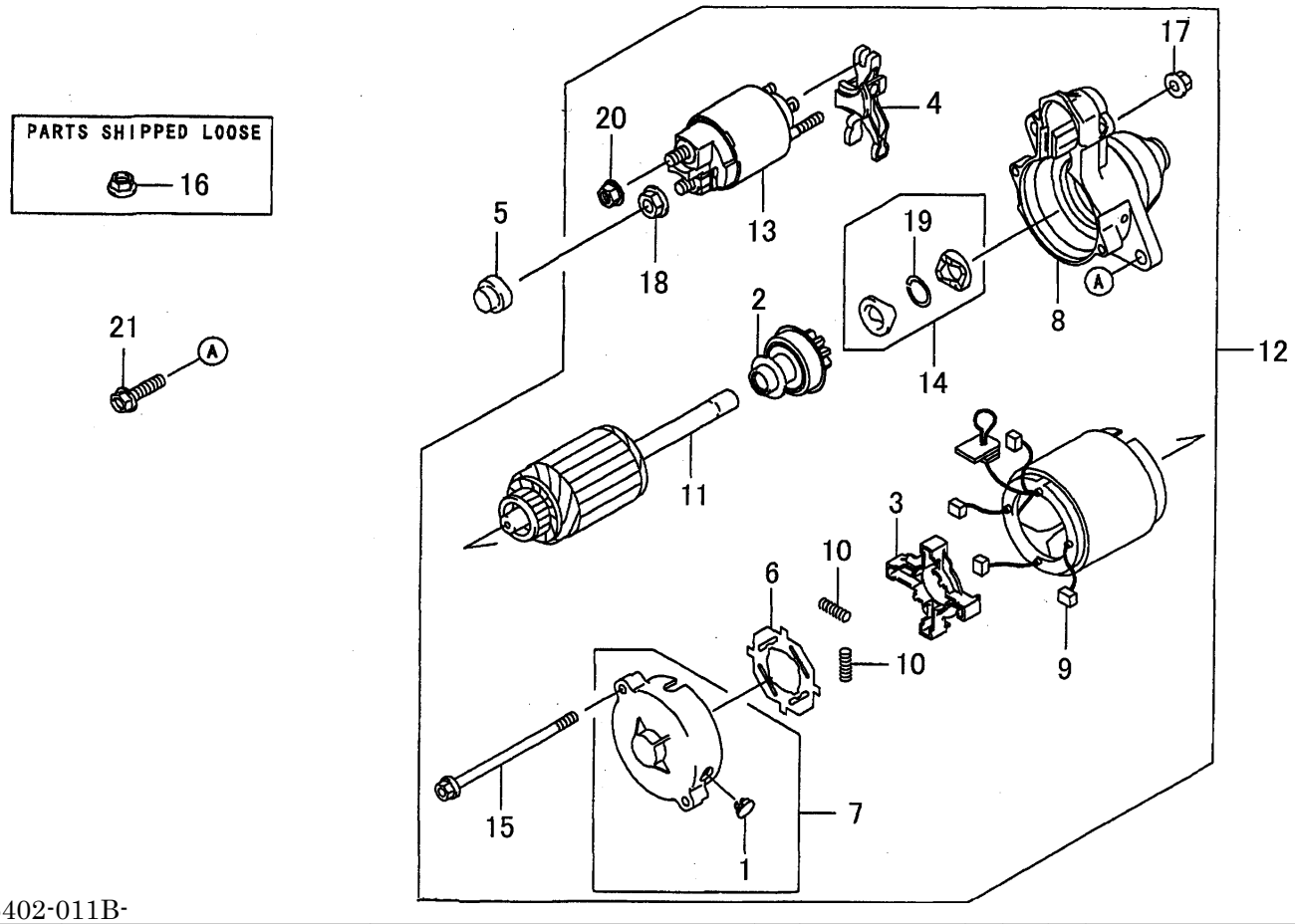

5402-011B-

KEY	PART CODE	DESCRIPTION	SPC	TYPE OF MODEL FD602D	NB02	ITC	COL	GRP	REMARKS
1	5110-652-118-XX	CAP	*	1					110652118
2	5130-812-085-XX	CLUTCH ASSY	*	1					130812085
3	5130-912-068-XX	HOLDER	*	1					130912068
4	5131-682-131-XX	LEVER	*	1					131682131
5	5140-242-205-XX	COVER	*	1					140242205
6	5160-732-098-XX	INSULATOR	*	1					160732098
7	5161-462-235-XX	COVER-ASSY	*	1					161462235
8	5161-462-241-XX	COVER ASSY	*	1					161462241
9	5210-392-059-XX	BRUSH	*	4					210392059
10	5210-402-052-XX	SPRING BRUSH	*	4					210402052
11	5210-802-054-XX	ARMATURE	*	1					210802054
12	5211-632-147-XX	STARTER-ELECTRIC	*	1					211632147
13	5270-107-005-XX	SWITCH	*	1					270107005
14	5320-852-097-XX	STOPPER	*	1					320852097
15	5920-022-277-XX	BOLT	*	2					920022277
16	5920-151-143-XX	NUT	*	1					920151143
17	5920-152-146-XX	NUT	*	2					920152146
18	5920-152-147-XX	NUT	*	1					920152147
19	5920-332-081-XX	RING,SNAP	*	1					920332081
20	5922-102-085-XX	NUT	*	1					922102085
21	5130-CA0-830-XX	BOLT-FLANGED,8X30	*	2					130CA0830

E N G I N E

E3112UP03···NP60(D-TYPE)

6004-097-640-00

FIG. 1 CYLINDER HEAD

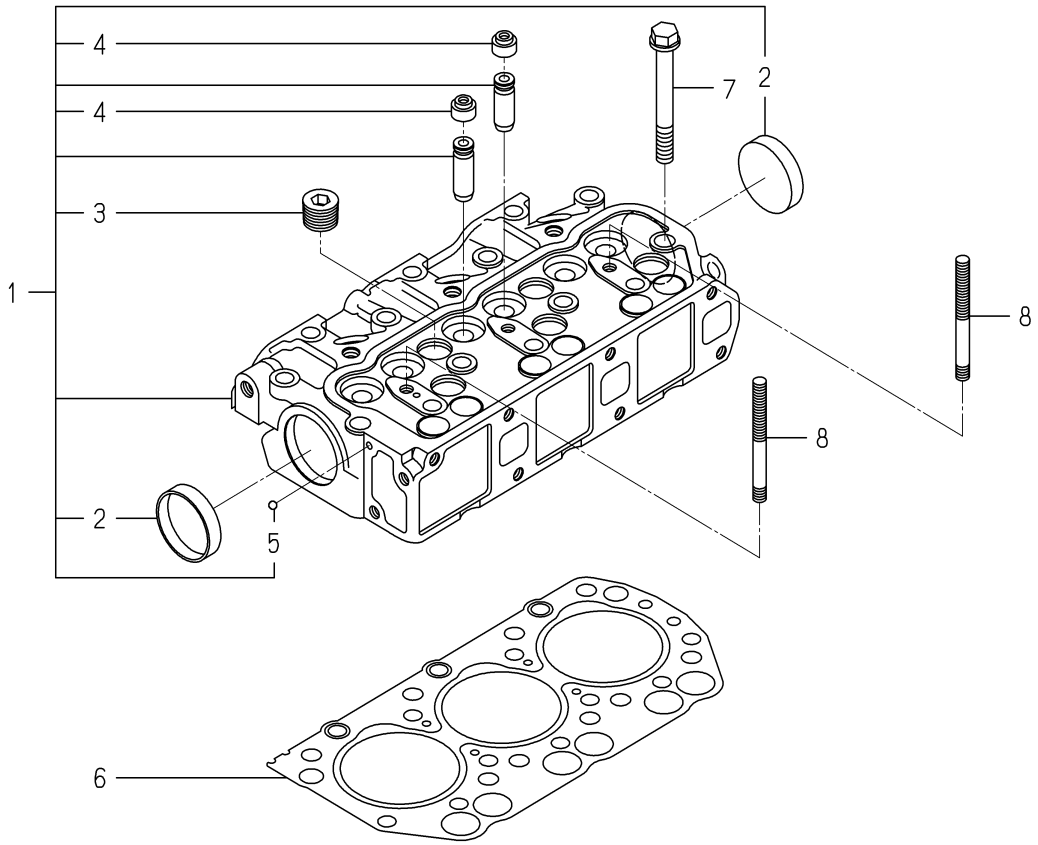

6004-101I-0100,6004-101I-0200

KEY	PART CODE	DESCRIPTION	SPC	TYPE OF MODEL E3112 UP03		ITC	COL	GRP	REMARKS
1	6211-110-057-30	CYLINDERHEAD ASSY	*	1					
2	6911-129-006-00	CAP,SEALING	*	2					
3	6209-605-004-10	PLUG/PT1/2	*	5					
4	6212-569-002-00	SEAL,OIL	*	6					
5	V682-200-000-60	BALL	*	1					
6	6211-141-029-20	GASKET/CYLINDERHEAD	*	1					
7	6209-000-044-00	BOLT	*	14					
8	6209-300-014-00	STUD	*	2					

FIG. 2 CYLINDER HEAD COVER

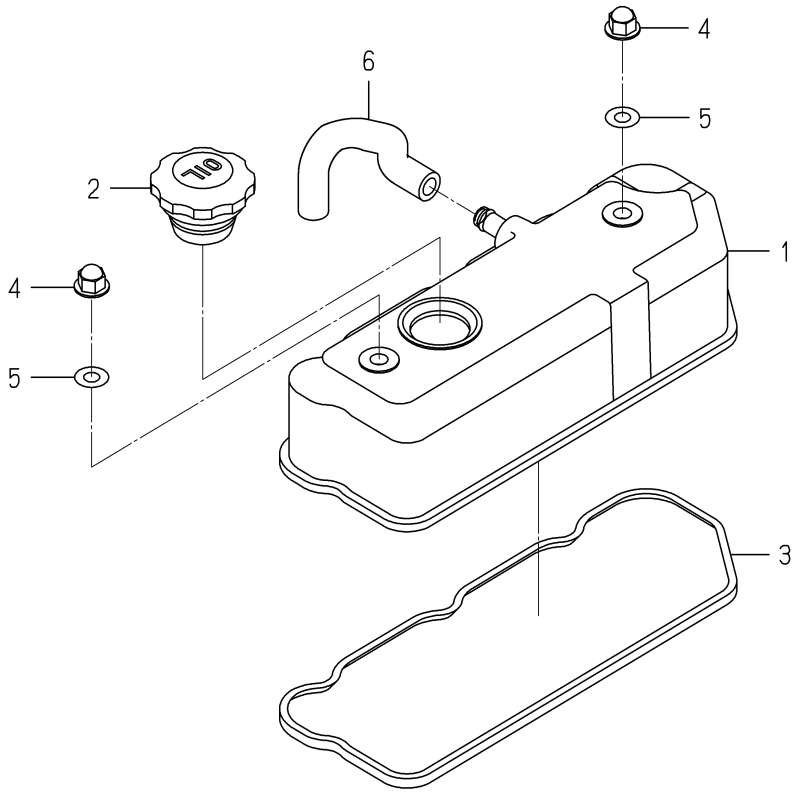

6003-110 -0100

KEY	PART CODE	DESCRIPTION	SPC	TYPE OF MODEL E3112 UP03		ITC	COL	GRP	REMARKS
1	6211-170-004-20	COVER/CYLINDER HEAD	*	1					
2	6211-751-001-10	CAP,OIL FILLER	*	1					
3	6211-173-003-00	SEAL,CYL.HEAD COVER	*	1					
4	6209-490-002-10	NUT/CAP	*	2					
5	6209-572-003-00	GASKET	*	2					
6	6209-360-028-20	HOSE/RUBBER	*	1					

FIG. 3 INLET MANIFOLD

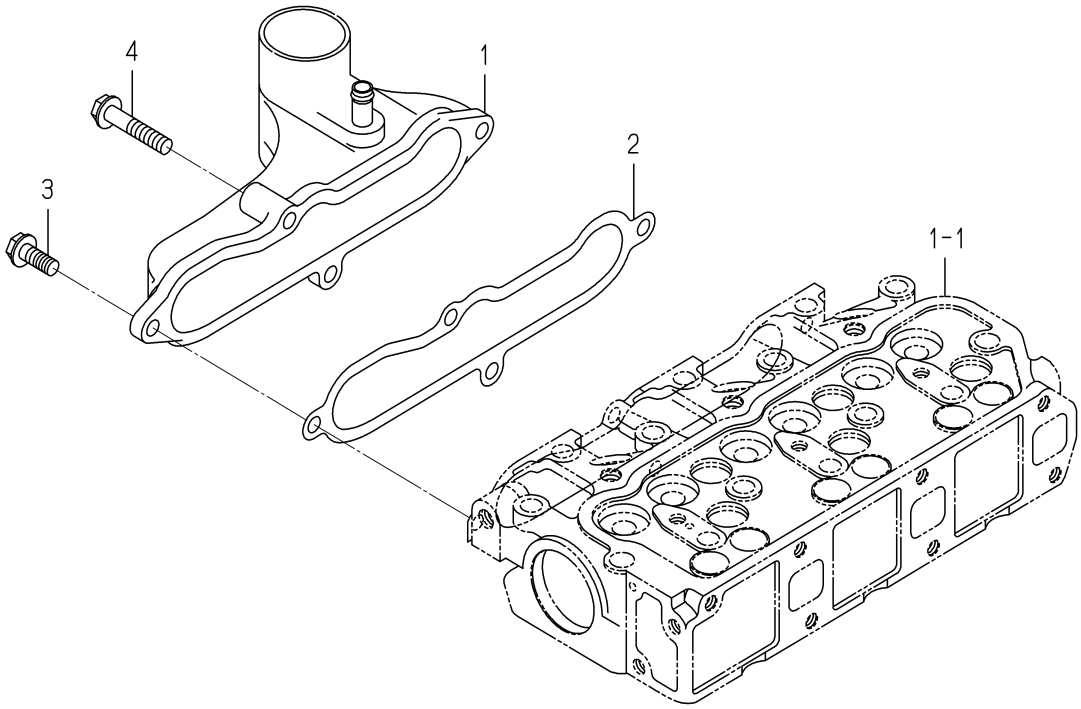

6003-120B-0100

KEY	PART CODE	DESCRIPTION	SPC	TYPE OF MODEL E3112 UP03		ITC	COL	GRP	REMARKS
1	6214-111-011-20	MANIFOLD(INLET) ASSY	*	1					
2	6214-115-001-20	GASKET,INLET MANIFOL	*	1					
3	V231-360-802-00	FLANGEBOLT	*	3					
4	V231-360-804-00	FLANGEBOLT	*	1					

FIG. 4 EXHAUST MANIFOLD

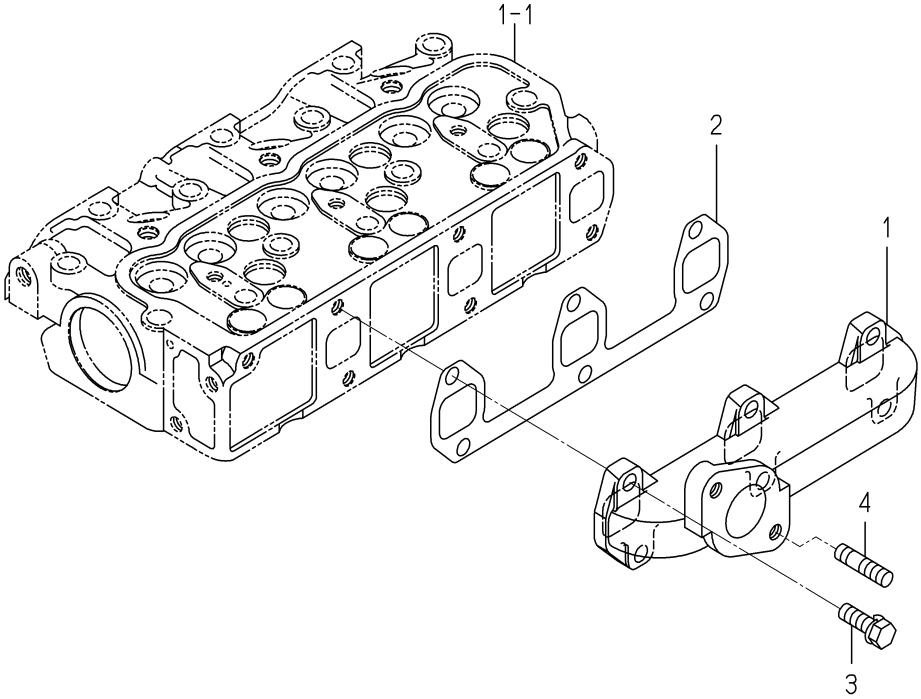

6003-140 -0100

KEY	PART CODE	DESCRIPTION	SPC	TYPE OF MODEL E3112 UP03		ITC	COL	GRP	REMARKS
1	6214-141-008-20	MANIFOLD/EXHAUST	*	1					
2	6214-145-001-30	GASKET,EXH.MANIFOLD	*	1					
3	V211-560-802-50	BOLT,SEMS/M8X25 7T	*	6					
4	6904-110-822-00	STUD	*	2					

FIG. 5 CYLINDER BLOCK

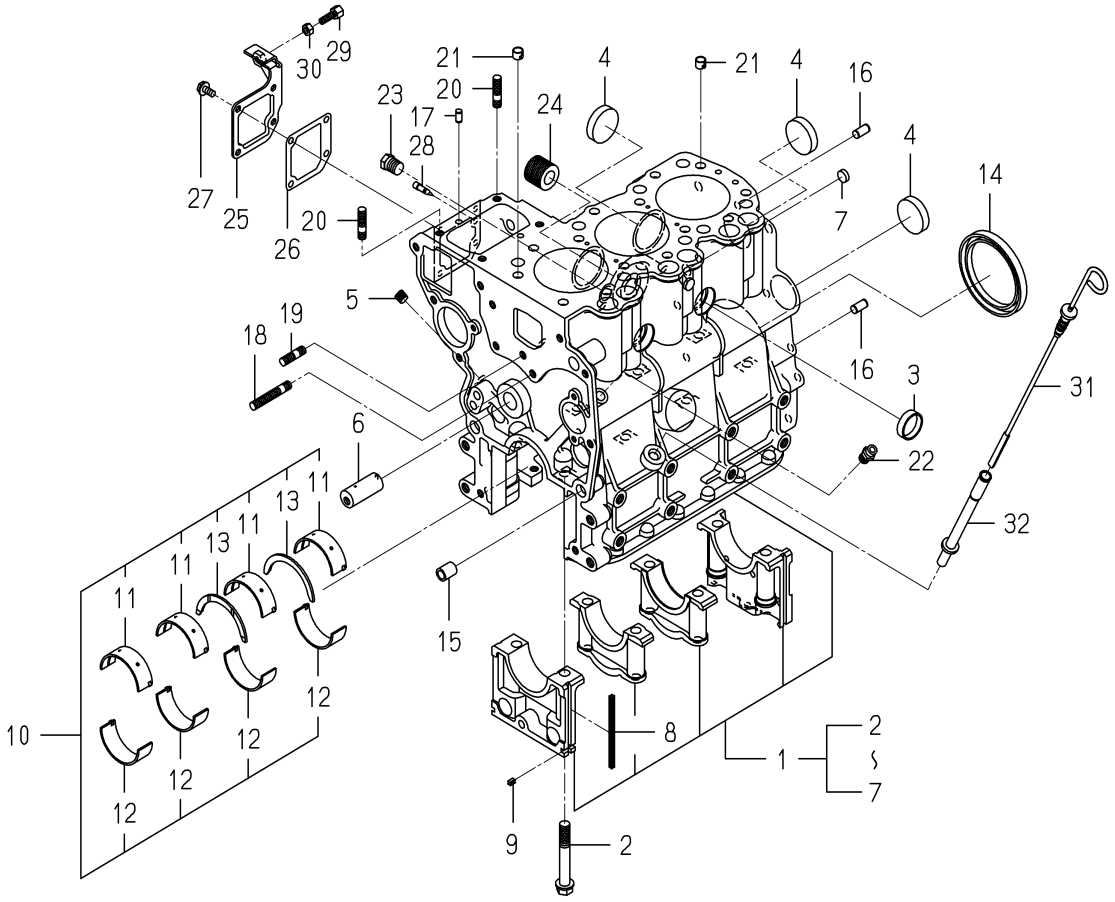

6004-203G-0100

KEY	PART CODE	DESCRIPTION	SPC	TYPE OF MODEL E3112 UP03		ITC	COL	GRP	REMARKS
1	6211-210-037-80	CYLINDERBLOCK ASSY	*	1					
2	6209-000-004-10	BOLT	*	8					
3	6209-610-001-10	CUP/SEALING/28	*	2					
4	6209-610-009-00	CUP/SEALING/36	*	4					
5	6209-605-007-10	PLUG/PT1/8	*	3					
6	6212-531-014-00	PIN/IDLEGEAR	*	1					
7	6209-610-008-00	CUP/SEALING/12	*	2					
8	6211-258-001-00	SEAL,BEARING CAP	*	4					
9	6211-258-002-00	SEAL,BEARING CAP/7	*	2					
10	6211-510-001-00	METAL,CRANK SET	*	1					
11	6211-511-003-00	BEARING/CRANK/UPPER	*	4					
12	6211-511-004-00	BEARING/CRANK/LOWER	*	4					
13	6211-599-001-10	BEARING,THRUST CRANK	*	2					
14	6209-625-001-00	SEAL,OIL	*	1					
15	6209-749-001-20	PIN/TUBE	*	2					
16	6213-129-006-00	PIN/STRAIGHT	*	2					
17	6209-740-005-00	PIN	*	2					
18	6904-110-840-00	STUD/M8X40	*	1					
19	6904-110-818-00	STUD	*	1					
20	6904-110-822-00	STUD	*	2					
21	6294-453-002-00	DOWEL	*	2					
22	6909-902-299-00	NIPPLE	*	1					
23	V782-160-000-4T	PLUG/SCREW/SEAL	*	1					
24	6213-319-001-00	CONNECTOR,OIL FILTER	*	1					
25	6211-291-001-10	COVER,INJ PUMP	*	1					
26	6211-292-001-20	GASKET/COVER	*	1					
27	V230-360-601-20	FLANGEBOLT	*	4					
28	6215-549-013-00	PIN	*	1					
29	6209-788-001-00	BOLT,ADJUST	*	1					
30	V301-260-006-00	NUT/M6	*	1					

FIG. 5 CYLINDER BLOCK

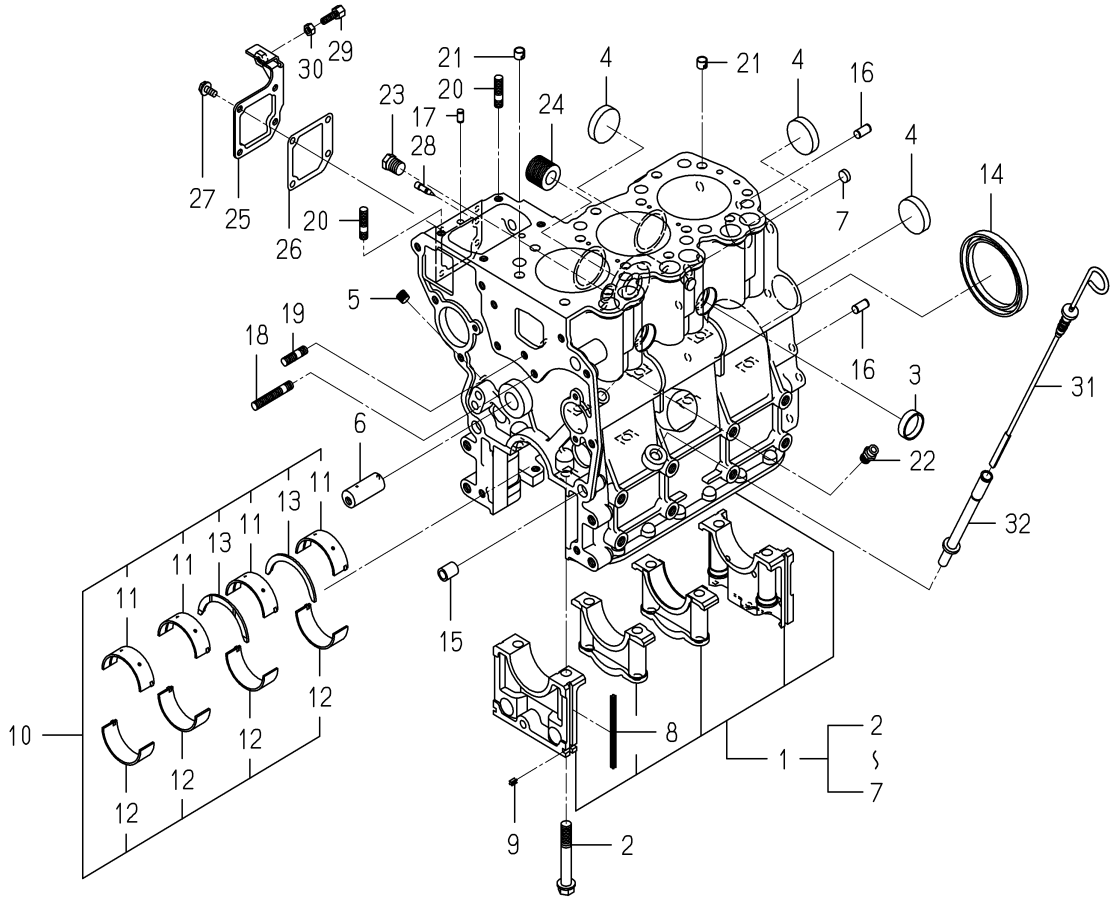

6004-203G-0100

KEY	PART CODE	DESCRIPTION	SPC	TYPE OF MODEL E3112 UP03		ITC	COL	GRP	REMARKS
31	6211-760-053-10	LEVELGAGE	*	1					
32	6211-766-009-10	GUIDE/LEVELGAGE COMP	*	1					

FIG. 6 BEARING/UNDER SIZE (OPTION)

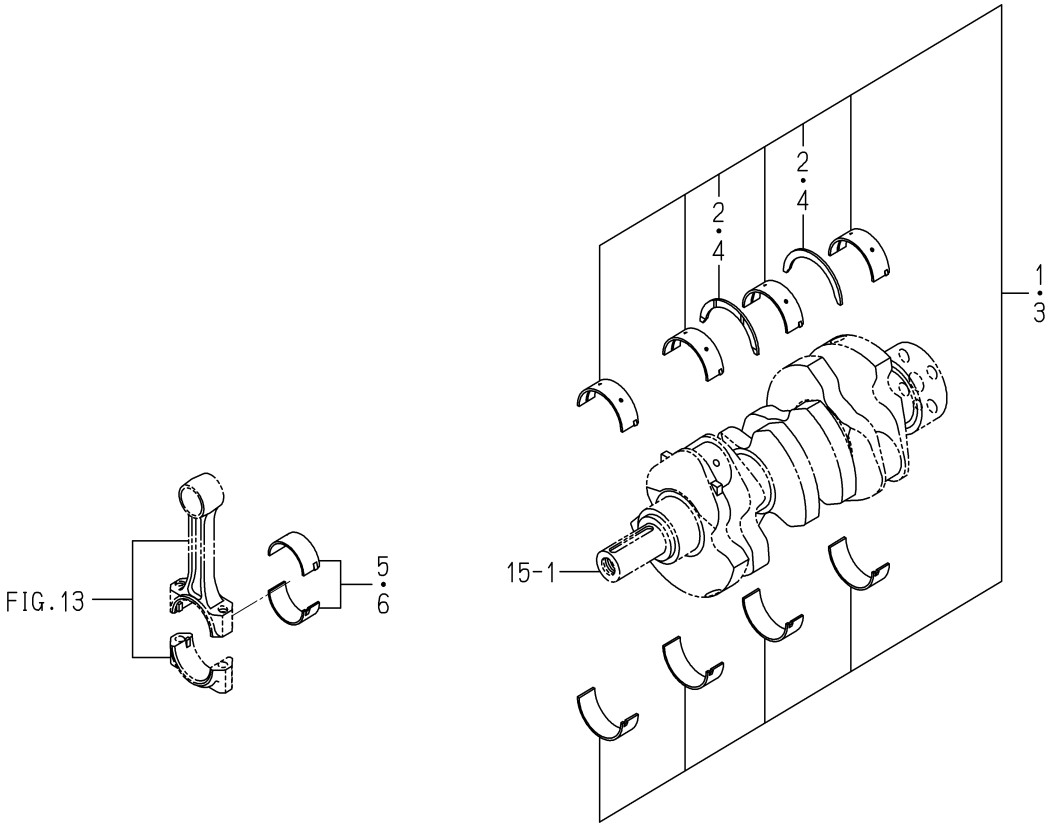

6003-209 -0100

KEY	PART CODE	DESCRIPTION	SPC	TYPE OF MODEL E3112 UP03		ITC	COL	GRP	REMARKS
1	6211-540-001-00	METAL,CRANK SET 050	T	1					
2	6211-599-001-10	BEARING,THRUST CRANK	T	2					
3	6211-560-001-00	METAL,CRANK SET 100	T	1					
4	6211-599-001-10	BEARING,THRUST CRANK	T	2					
5	6212-274-016-00	BEARING/CONNECTING R	T	3					
6	6212-276-016-00	BEARING/CONNECTING R	T	3					

FIG. 7 OIL PAN

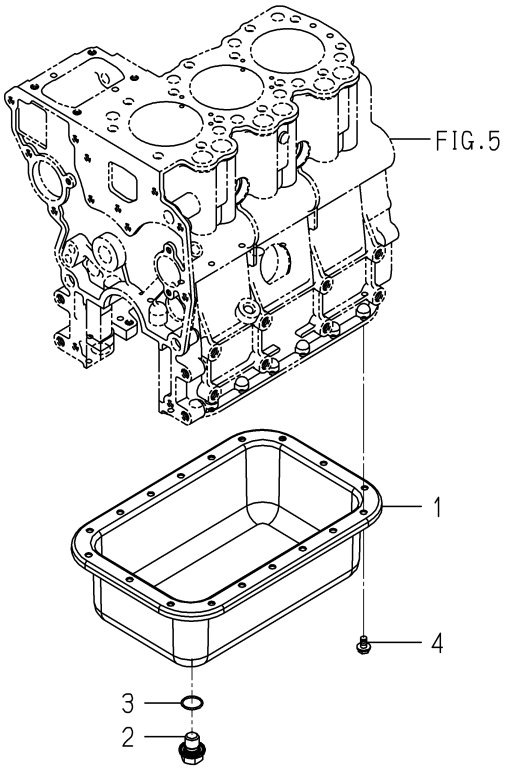

6004-210M-0100

KEY	PART CODE	DESCRIPTION	SPC	TYPE OF MODEL E3112 UP03		ITC	COL	GRP	REMARKS
1	6211-361-104-00	OILPAN COMP	*	1					
2	3805-355-002-20	PLUG/M14X1.5	*	1					
3	V720-102-401-80	O-RING/P18	*	1					
4	V230-360-601-00	FLANGEBOLT	*	18					

FIG. 8 REAR PLATE

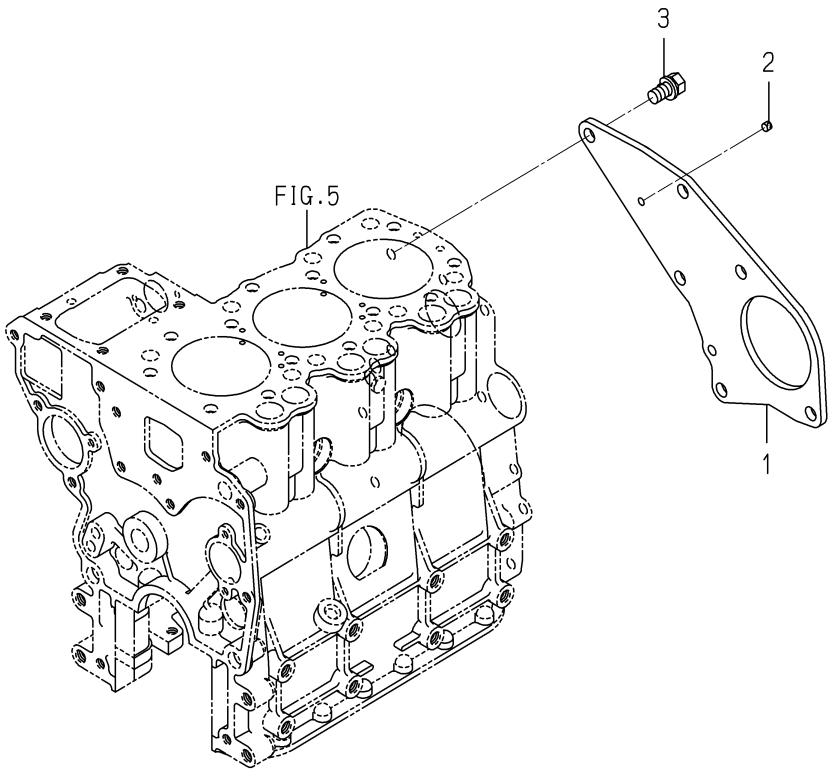

6004-220P-0100

KEY	PART CODE	DESCRIPTION	SPC	TYPE OF MODEL E3112 UP03		ITC	COL	GRP	REMARKS
1	6211-341-081-00	PLATE/REAR	*	1					
2	6211-342-001-30	POINTER	*	1					
3	6901-911-020-00	BOLT,SEMS/M10X20	*	4					

FIG. 9 TIMING GEAR CASE

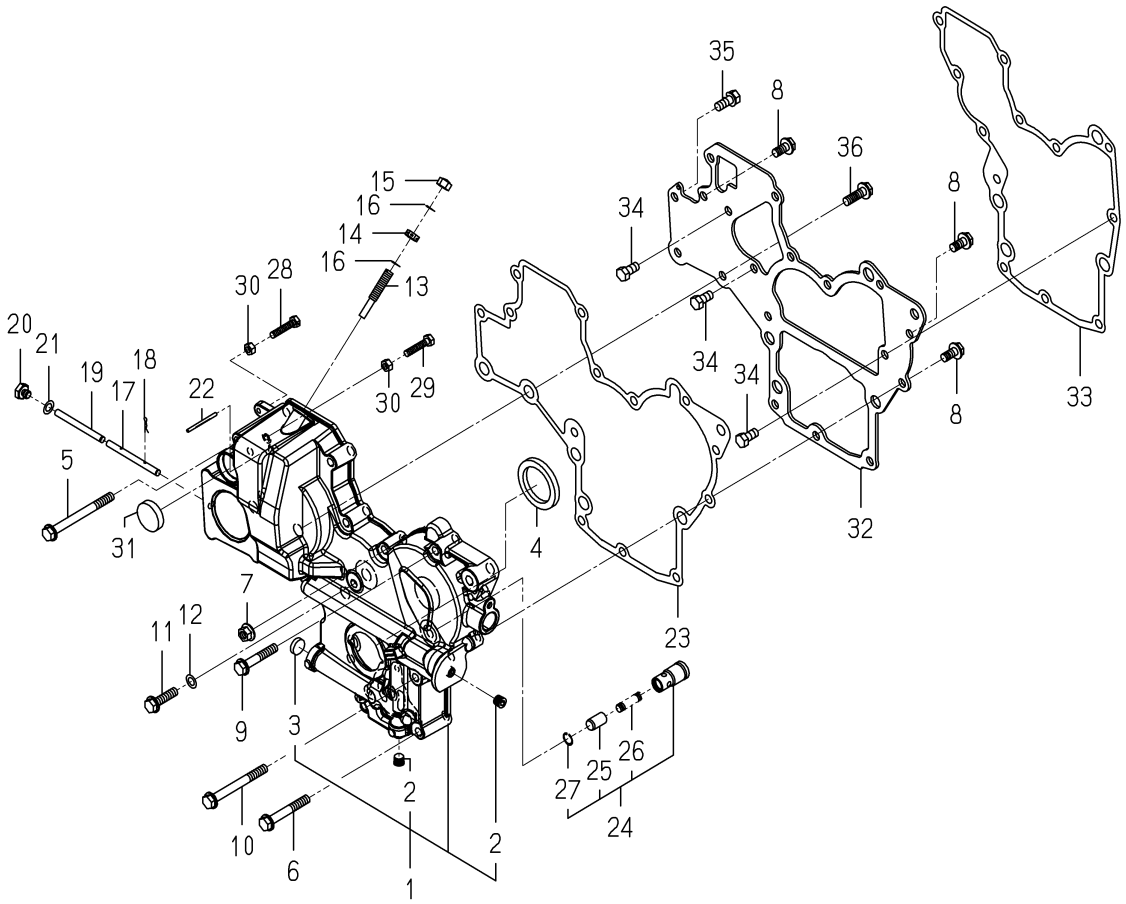

6004-241I-0100,6004-241I-0200

KEY	PART CODE	DESCRIPTION	SPC	TYPE OF MODEL E3112 UP03		ITC	COL	GRP	REMARKS
1	6211-310-069-00	GEARCASE ASSY	*	1					
2	6209-605-007-10	PLUG/PT1/8	*	2					
3	6209-610-007-00	CUP/SEALING/16	*	1					
4	6209-625-002-00	SEAL,OIL	*	1					
5	V231-360-808-50	FLANGEBOLT	*	1					
6	V231-360-805-50	FLANGEBOLT	*	2					
7	3817-401-001-00	NUT/M08	*	1					
8	V231-360-801-60	FLANGEBOLT	*	3					
9	V231-360-804-50	FLANGEBOLT	*	5					
10	V231-360-807-50	FLANGEBOLT	*	1					
11	V231-360-803-00	FLANGEBOLT	*	1					
12	6209-500-003-00	WASHER/08X14X01	*	1					
13	6215-546-003-30	STOPPER/FULLLOAD	*	1					
14	6209-409-001-00	NUT/M8	*	1					
15	V341-120-008-00	NUT,CAP/M 8	*	1					
16	6209-920-002-00	PACKING	*	2					
17	6215-542-004-20	PIN/ARM	*	1					
18	P117-303-003-00	PIN/SNAP	*	2					
19	6215-542-005-20	PIN	*	1					
20	6209-600-004-00	PLUG/SCREW	*	1					
21	6209-500-003-00	WASHER/08X14X01	*	1					
22	6209-740-001-00	PIN,GROOVE	*	1					
23	6211-312-003-20	GASKET/GEARCASE	*	1					
24	6213-160-002-20	VALVE/RELIEF ASSY	*	1					
25	6213-161-001-20	PISTON/VALVE/RELIEF	*	1					
26	6213-164-001-00	SPRING/RELIEF VALVE	*	1					
27	V705-140-012-00	RING,SNAP/12 C	*	1					
28	6209-050-001-00	BOLT/M6	*	1					
29	6209-050-002-00	BOLT/M6	*	1					
30	V301-260-006-00	NUT/M6	*	2					

FIG. 9 TIMING GEAR CASE

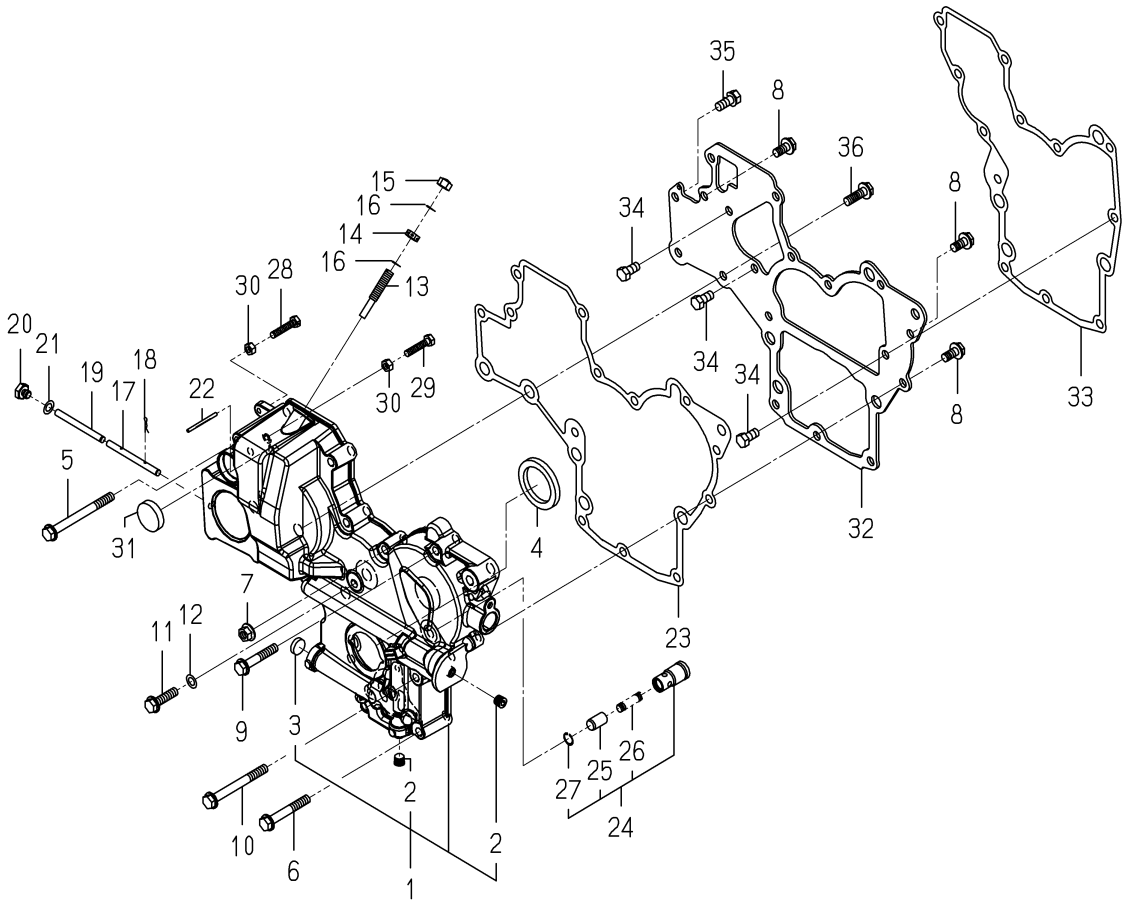

6004-241I-0100,6004-241I-0200

KEY	PART CODE	DESCRIPTION	SPC	TYPE OF MODEL E3112 UP03		ITC	COL	GRP	REMARKS
31	3625-540-004-00	CAP,BLANK/30	*	1					
32	6211-311-048-10	PLATE/FRONT	*	1					
33	6211-312-004-20	GASKET/PLATE	*	1					
34	6902-050-816-00	BOLT	*	3					
35	V211-560-802-00	BOLT/M8X20	*	1					
36	V231-360-802-50	FLANGEBOLT	*	2					

FIG. 10 HANGER

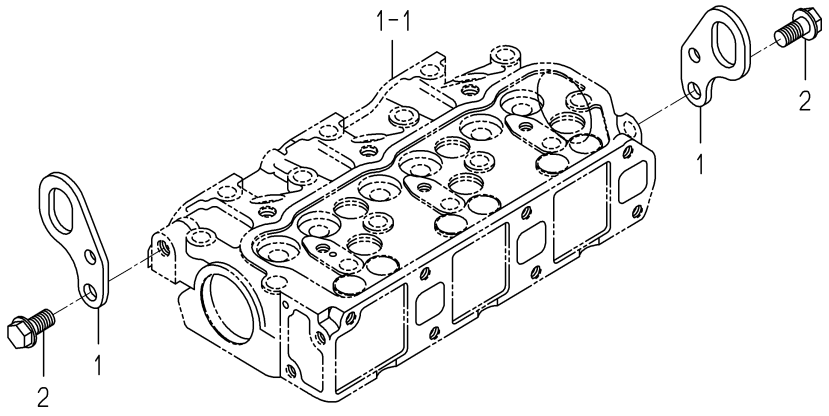

6003-290 -0100

KEY	PART CODE	DESCRIPTION	SPC	TYPE OF MODEL E3112 UP03		ITC	COL	GRP	REMARKS
1	6211-777-007-30	HANGER	*	2					
2	V233-361-002-00	FLANGEBOLT	*	2					

FIG. 11 VALVE

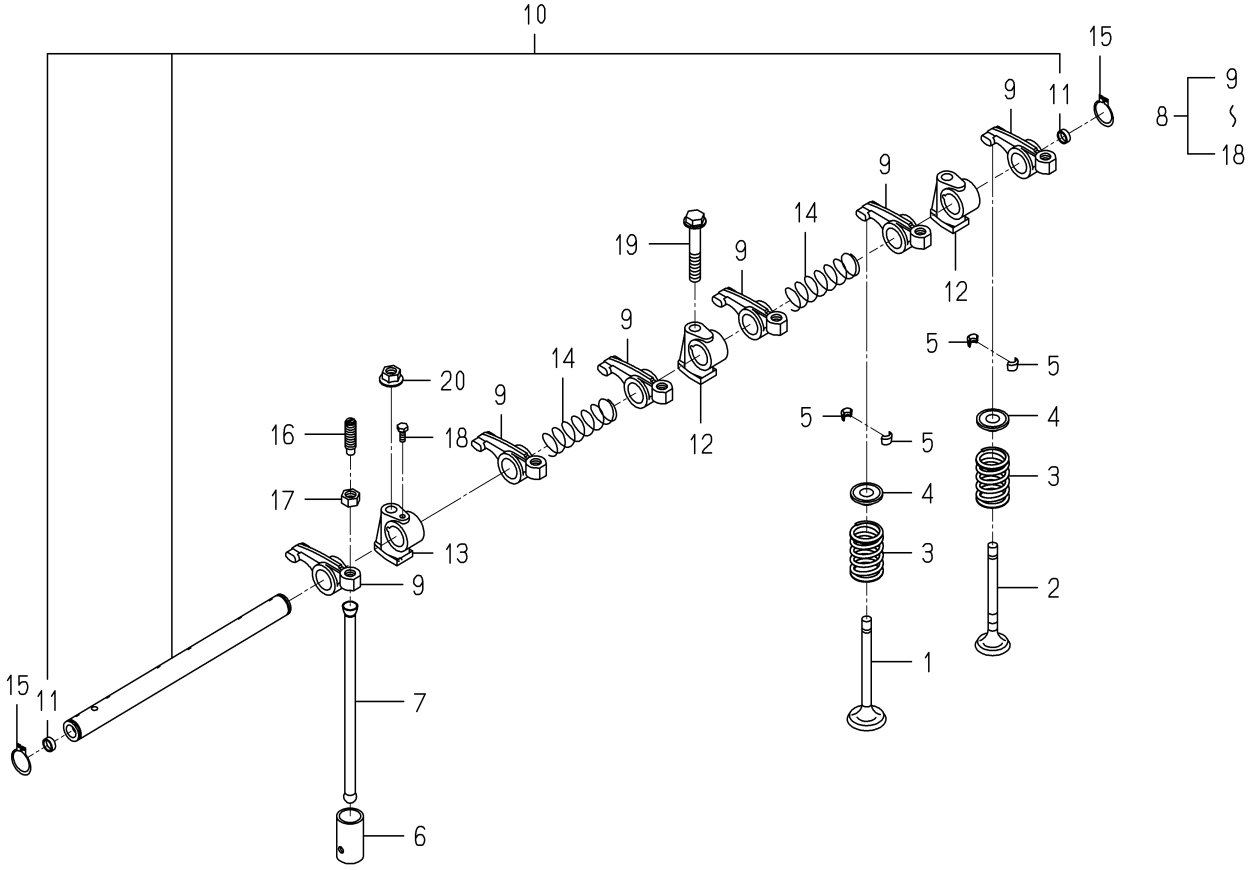

6004-301 -0100

KEY	PART CODE	DESCRIPTION	SPC	TYPE OF MODEL E3112 UP03		ITC	COL	GRP	REMARKS
1	6212-551-028-00	VALVE/INTAKE	*	3					
2	6212-552-014-00	VALVE/EXHAUST	*	3					
3	6212-561-001-10	SPRING/VALVE	*	6					
4	6212-563-005-00	SEAT/VALVESPRING	*	6					
5	6212-565-001-00	CUTTER,VALVE	*	12					
6	6212-571-006-00	TAPPET	*	6					
7	6212-575-002-00	ROD,PUSH	*	6					
8	6212-600-002-10	ROCKERSHAFT ASSY	*	1					
9	6212-611-004-10	ROCKERARM	*	6					
10	6212-620-001-20	SHAFT/ROCKERARM ASSY	*	1					
11	6212-626-002-10	PLUG	*	2					
12	6212-628-004-00	BRACKET ROCKER SHAFT	*	2					
13	6212-628-005-00	BRACKET,ROCKER SHAFT	*	1					
14	6209-940-004-00	SPRING	*	2					
15	V704-140-016-00	RING,SNAP/16 C	*	2					
16	6212-616-002-00	SCREW ADJUST	*	6					
17	6209-409-003-00	NUT	*	6					
18	6209-000-002-00	BOLT	*	1					
19	V231-360-805-00	FLANGEBOLT	*	1					
20	3817-401-001-00	NUT/M08	*	2					

FIG. 12 CAM SHAFT

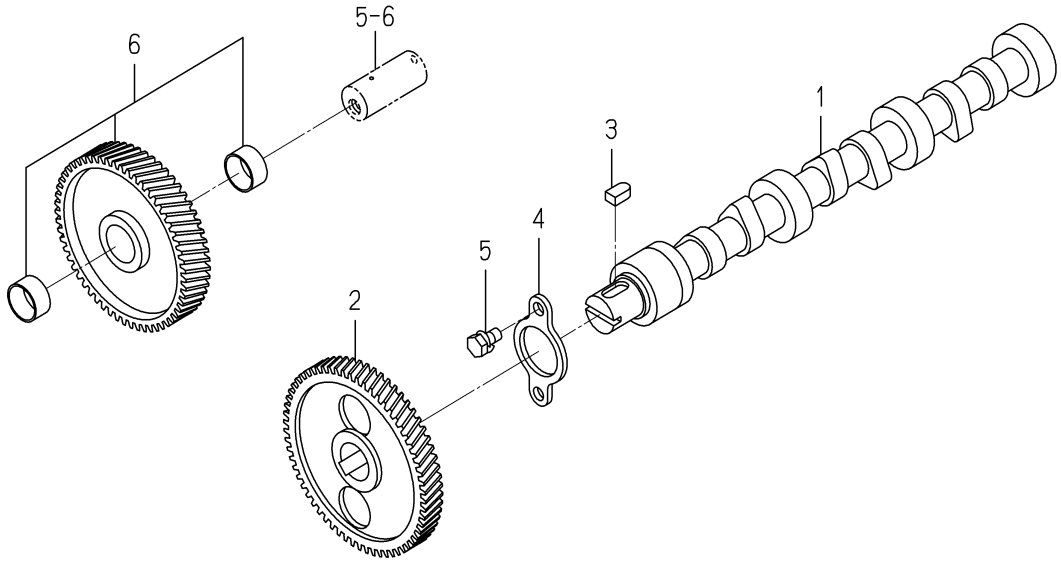

6003-310 -0100

KEY	PART CODE	DESCRIPTION	SPC	TYPE OF MODEL E3112 UP03		ITC	COL	GRP	REMARKS
1	6212-511-002-00	SHAFT,CAM	*	1					
2	6212-522-010-00	GEAR/CAMSHAFT	*	1					
3	6209-730-005-00	KEY/07X05X09	*	1					
4	6212-535-001-00	PLATE,THRUST	*	1					
5	V210-560-601-20	BOLT/S	*	2					
6	6212-523-023-00	GEAR/IDLE ASSY	*	1					

FIG. 13 PISTON

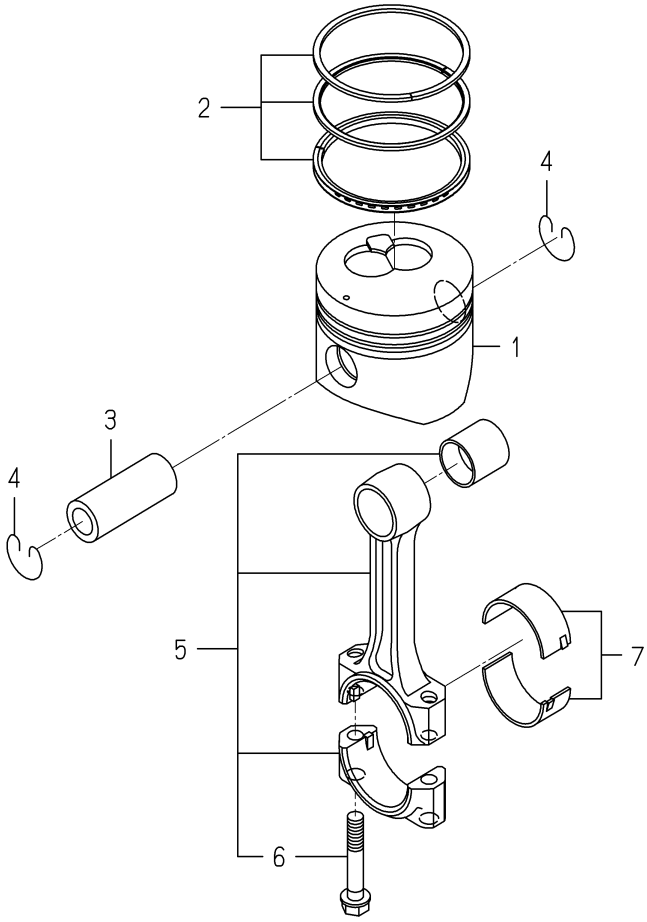

6004-340I-0100

KEY	PART CODE	DESCRIPTION	SPC	TYPE OF MODEL E3112 UP03		ITC	COL	GRP	REMARKS
1	6212-111-094-20	PISTON	*	3					
2	6212-121-014-20	RING/PISTON SET	*	3					
3	6212-211-001-10	PIN,PISTON	*	3					
4	6209-587-001-00	RING,SNAP	*	6					
5	6212-230-004-10	CONNECTINGROD ASSY	*	3					
6	6212-235-005-00	BOLT/CONNECTINGROD	*	6					
7	6212-271-016-00	BEARING/CONNECTING R	*	3					

FIG. 14 PISTON/OVER SIZE (OPTION)

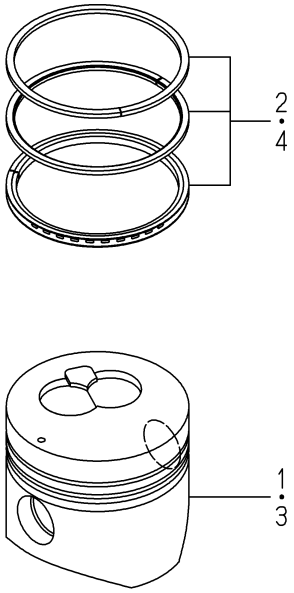

6004-349I-0100

KEY	PART CODE	DESCRIPTION	SPC	TYPE OF MODEL E3112 UP03		ITC	COL	GRP	REMARKS
1	6212-114-094-20	PISTON(OV) 78.7	T	3					
2	6212-124-014-10	RING/PISTON/OV SET	T	3					
3	6212-116-094-20	PISTON(OV) 79.2	T	3					
4	6212-126-014-10	RING/PISTON/OV SET	T	3					

FIG. 15 CRANK SHAFT

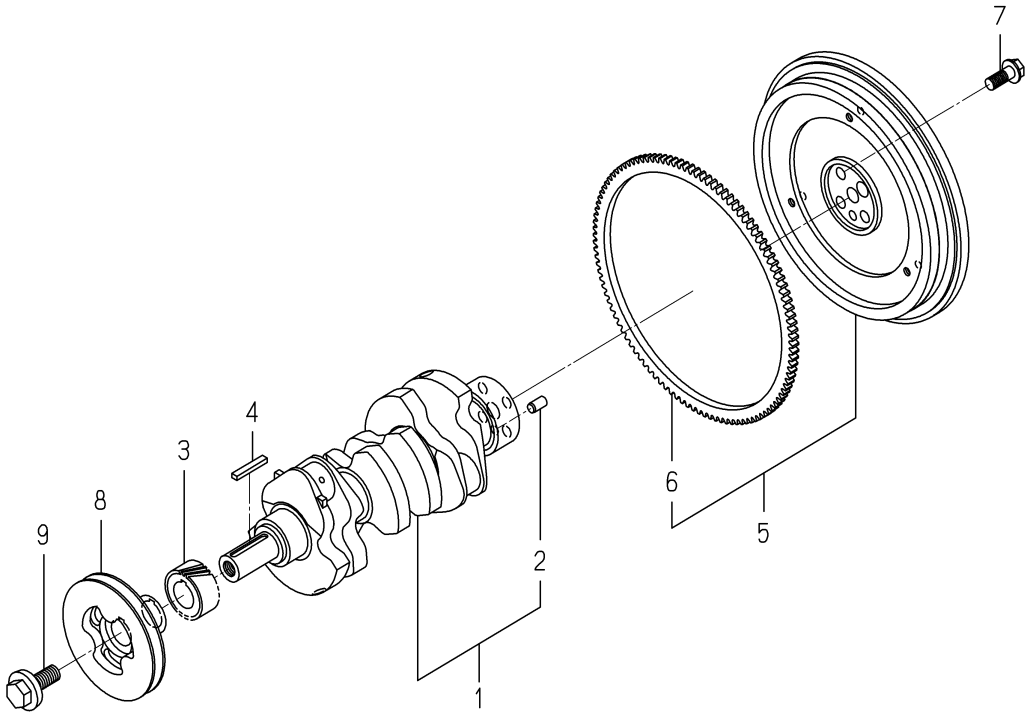

6004-351H-0100

KEY	PART CODE	DESCRIPTION	SPC	TYPE OF MODEL E3112 UP03		ITC	COL	GRP	REMARKS
1	6212-310-009-50	CRANKSHAFT ASSY	*	1					
2	V523-101-001-80	PIN	*	1					
3	6212-521-008-00	GEAR/CRANK	*	1					
4	6209-730-006-00	KEY/07X05X43	*	1					
5	6212-330-095-10	FLYWHEEL ASSY	*	1					
6	6212-333-003-00	RINGGEAR	*	1					
7	6209-046-015-00	BOLT/FLANGE	*	4					
8	6212-371-074-10	PULLEY/CRANK	*	1					
9	6209-000-043-00	BOLT/CRANK	*	1					

FIG. 16 OIL PUMP

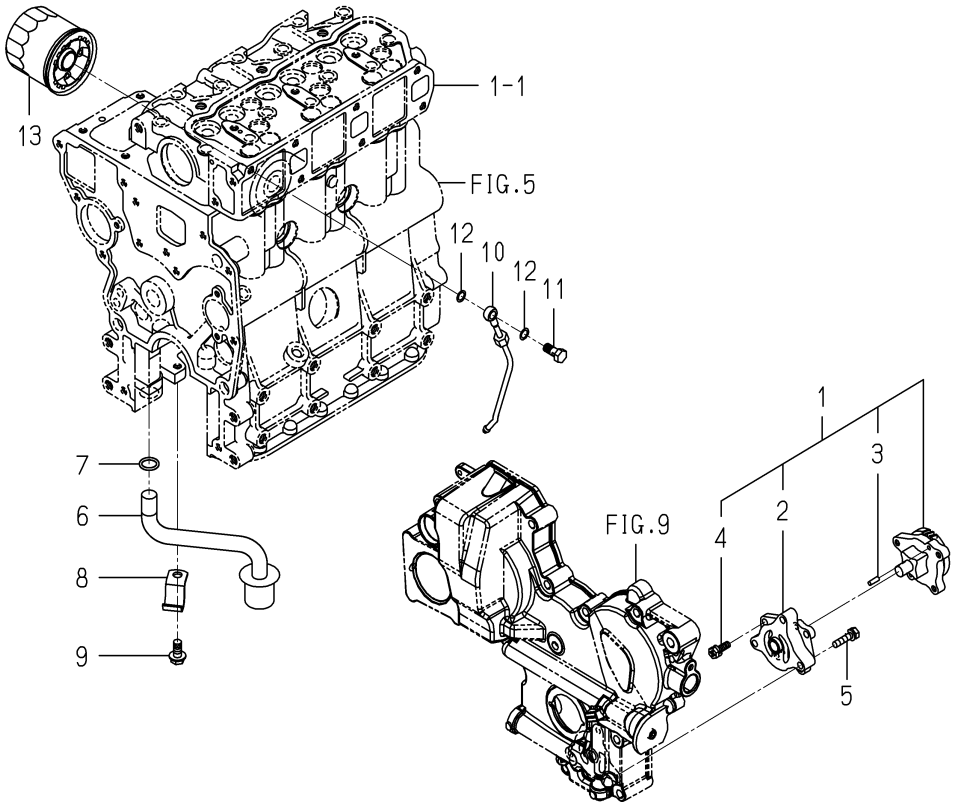

6004-401A-0100

KEY	PART CODE	DESCRIPTION	SPC	TYPE OF MODEL E3112 UP03		ITC	COL	GRP	REMARKS
1	6213-100-003-30	OILPUMP ASSY	*	1					
2	6213-111-001-30	BODY/OILPUMP	*	1					
3	6213-129-003-00	PIN/STRAIGHT	*	2					
4	6213-119-001-00	BOLT/WS	*	3					
5	V210-560-602-50	BOLT/S	*	3					
6	6213-140-032-00	STRAINER	*	1					
7	V720-102-401-50	O-RING/P15	*	1					
8	6213-149-001-00	CLAMP,STRAINER	*	1					
9	V231-360-801-60	FLANGEBOLT	*	1					
10	6213-311-006-00	PIPE,OIL	*	1					
11	6909-906-105-10	BOLT,JOINT	*	1					
12	6209-920-002-00	PACKING	*	2					
13	6213-240-002-20	CARTRIDGE/OILFILTER	*	1					

FIG. 17 WATER PUMP

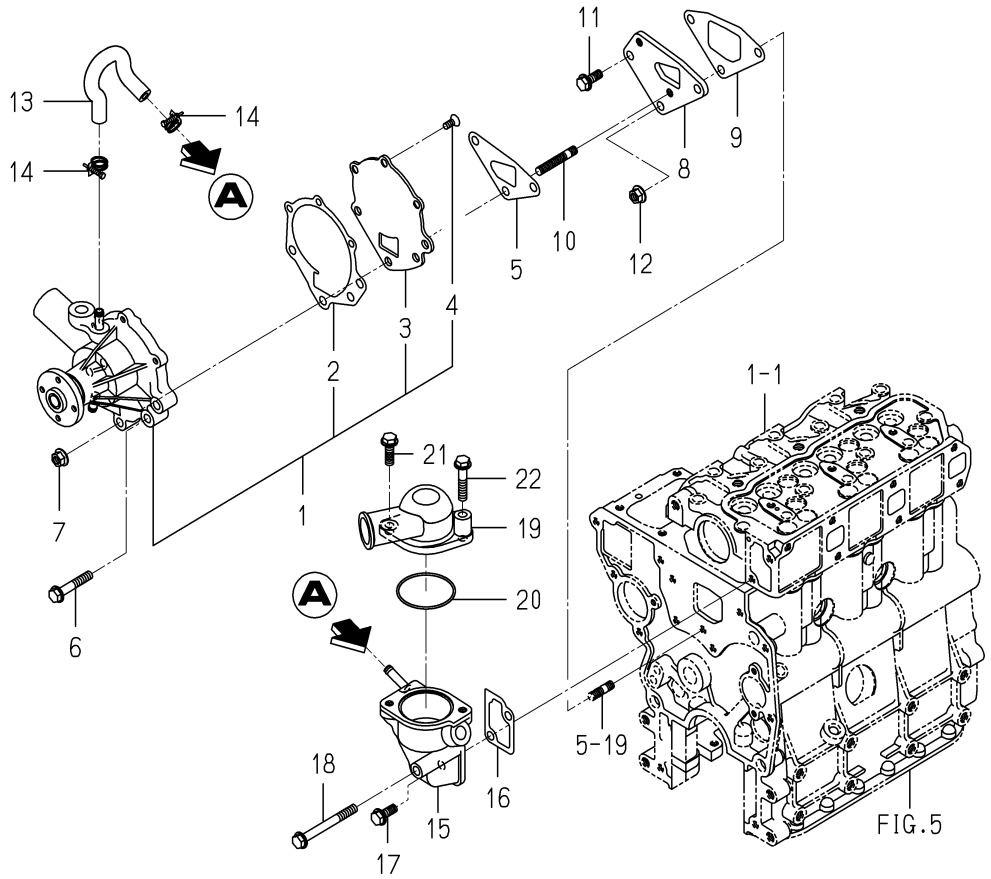

6004-420I-0100

KEY	PART CODE	DESCRIPTION	SPC	TYPE OF MODEL E3112 UP03		ITC	COL	GRP	REMARKS
1	6213-610-005-50	WATERPUMP ASSY	*	1					
2	6213-613-002-10	GASKET	*	1					
3	6213-612-004-00	PLATE/WATER PUMP	*	1					
4	6213-619-003-00	SCREW/WATER PUMP	*	3					
5	6213-614-003-10	GASKET/WATER PUMP	*	1					
6	V231-360-804-50	FLANGEBOLT	*	1					
7	3817-401-001-00	NUT/M08	*	2					
8	6213-619-001-00	SPACER,PUMP.WATER	*	1					
9	6213-614-004-10	GASKET,SPACER	*	1					
10	6904-110-840-00	STUD/M8X40	*	2					
11	V231-360-802-00	FLANGEBOLT	*	1					
12	3817-401-001-00	NUT/M08	*	1					
13	6213-729-013-10	HOSE/RUBBER	*	1					
14	J061-210-015-00	CLAMP/WIRE/10-15	*	2					
15	6213-716-001-60	HOUSING/THERMOSTAT	*	1					
16	6213-743-002-10	GASKET/HOUSING	*	1					
17	V231-360-802-00	FLANGEBOLT	*	1					
18	V231-360-807-50	FLANGEBOLT	*	1					
19	6213-711-018-00	PIPE/WATEROUTLET	*	1					
20	V723-102-005-50	O-RING	*	1					
21	V231-360-802-50	FLANGEBOLT	*	1					
22	V231-360-804-00	FLANGEBOLT	*	1					

FIG. 18 COOLING FAN

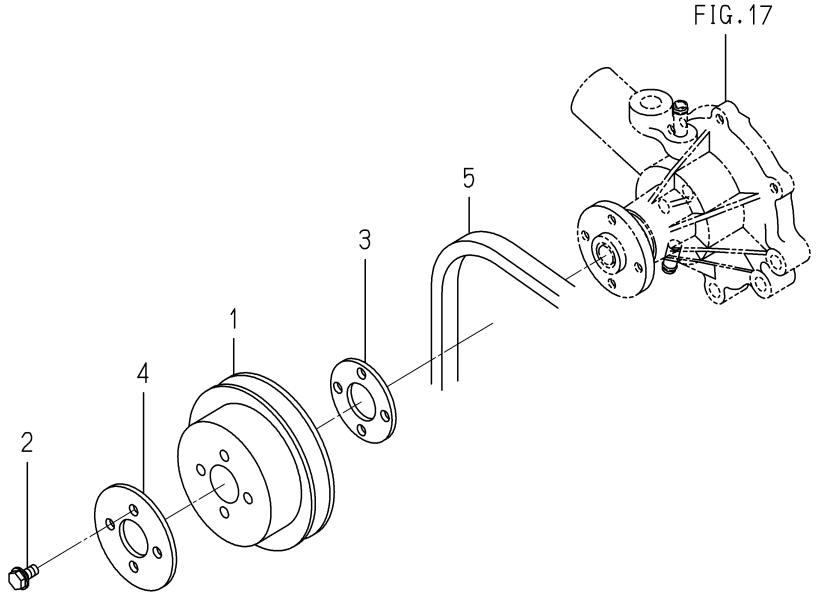

6004-480Y-0100

KEY	PART CODE	DESCRIPTION	SPC	TYPE OF MODEL E3112 UP03		ITC	COL	GRP	REMARKS
1	6213-641-022-20	PULLEY/WATERPUMP	*	1					
2	V230-360-601-60	FLANGEBOLT	*	4					
3	6213-669-021-00	SPACER/FAN	*	1					
4	6213-669-022-00	SPACER/FAN	*	1					
5	6213-671-053-00	BELT/VNR5A36.0	*	1					

FIG. 19 INJECTION NOZZLE

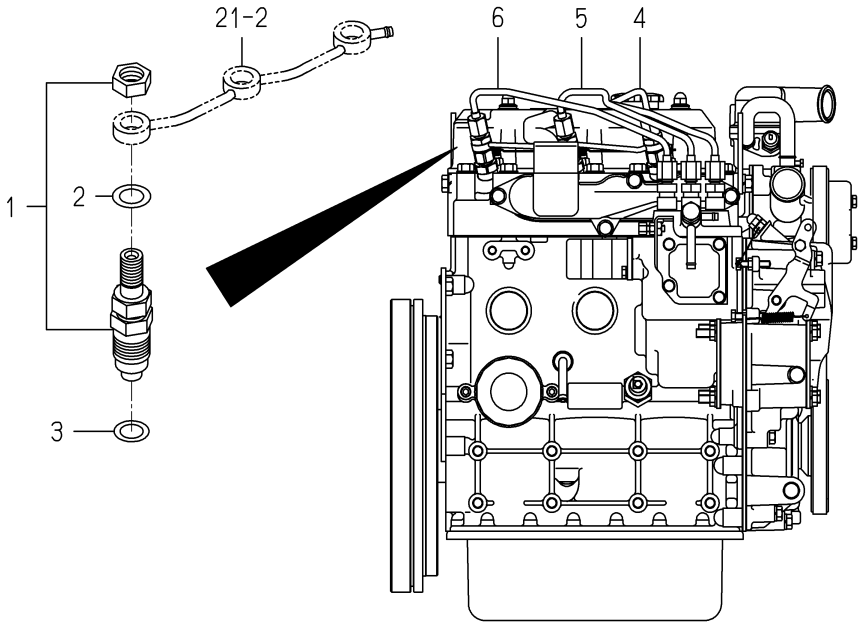

6004-501C-0100

KEY	PART CODE	DESCRIPTION	SPC	TYPE OF MODEL E3112 UP03		ITC	COL	GRP	REMARKS
1	6215-300-036-10	INJECTIONNOZZLE ASSY	*	3					FIG 026
2	6215-359-001-00	WASHER	*	3					
3	6215-315-002-00	GASKET,NOZZLE	*	3					
4	6215-411-126-10	PIPE/INJECTION ASSY	*	1					
5	6215-411-127-00	PIPE/INJECTION ASSY	*	1					
6	6215-411-128-00	PIPE/INJECTION ASSY	*	1					

FIG. 20 INJECTION PUMP

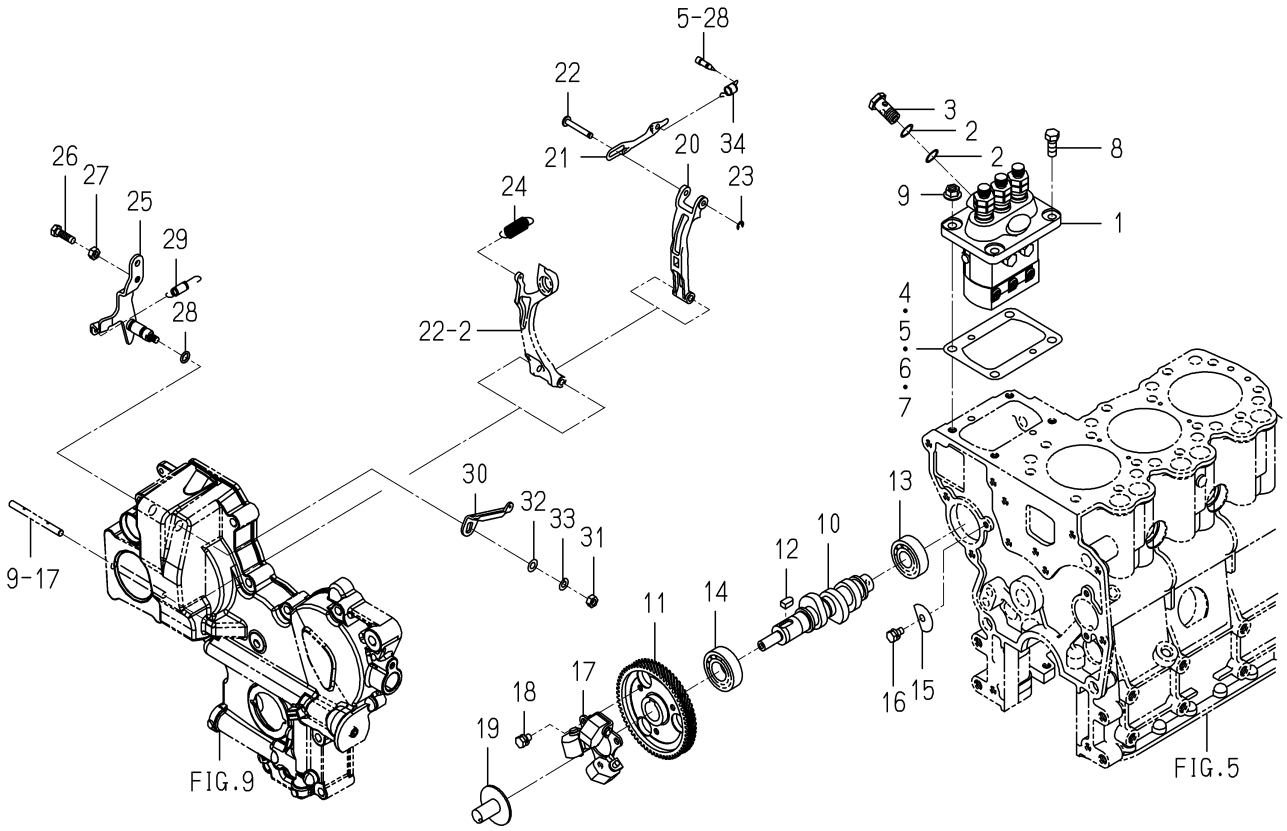

6004-511Q-0100

KEY	PART CODE	DESCRIPTION	SPC	TYPE OF MODEL E3112 UP03		ITC	COL	GRP	REMARKS
1	6215-600-156-20	INJECTIONPUMP ASSY	*	1					FIG 027
2	6215-619-010-00	WASHER/AIR BLEEDER	*	2					
3	6215-619-009-00	SCREW/HOLLOW	*	1					
4	6219-752-045-00	SHIM/INJECTIONPUMP	*	1					
5	6219-752-044-00	SHIM/INJECTIONPUMP	*	1					
6	6219-752-046-00	SHIM/INJECTIONPUMP	*	1					
7	6219-752-047-00	SHIM/INJECTIONPUMP	*	1					
8	V201-360-802-00	BOLT/M8X20	*	2					
9	3817-401-001-00	NUT/M08	*	2					
10	6215-621-016-20	CAMSHAFT/INJECTION P	*	1					
11	6212-524-002-30	GEAR/INJECTIONPUMP	*	1					
12	6209-730-005-00	KEY/07X05X09	*	1					
13	V600-110-620-30	BEARING,RB/6203	*	1					
14	1729-202-001-00	BEARING/BALL	*	1					
15	6212-535-002-00	PLATE,THRUST INJPUMP	*	1					
16	V210-560-601-20	BOLT/S	*	1					
17	6215-520-001-00	FLYWEIGHT	*	1					
18	6209-030-043-00	BOLT/M6X10	*	3					
19	6215-526-004-00	THRUSTPIECE	*	1					
20	6215-541-001-10	ARM/FLOATING COMP	*	1					
21	6215-543-002-10	RINK/CONTROL	*	1					
22	6215-542-006-00	PIN,CONTROL	*	1					
23	V710-140-004-00	RING,SNAP/4 E	*	1					
24	6215-531-025-00	SPRING/GOVERNOR	*	1					
25	6215-541-012-20	LEVER(CONTROL) COMP	*	1					
26	6209-044-001-00	BOLT/M6X18	*	1					
27	V302-260-006-00	NUT/M 6	*	2					
28	V720-101-900-80	O-RING/P8	*	1					
29	6209-580-002-10	SPRING,RETURN	*	1					
30	6215-549-007-10	ARM/CONTROL	*	1					

FIG. 20 INJECTION PUMP

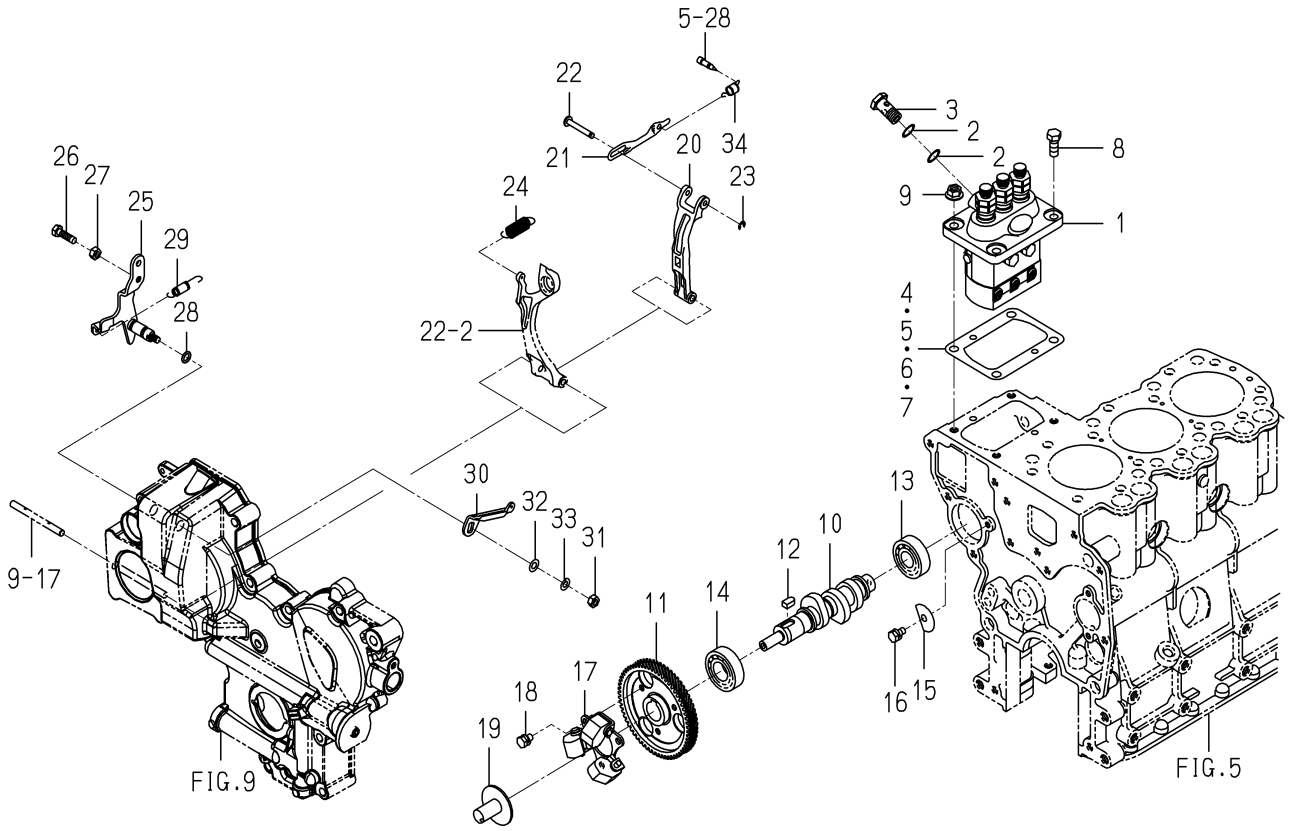

6004-511Q-0100

KEY	PART CODE	DESCRIPTION	SPC	TYPE OF MODEL E3112 UP03		ITC	COL	GRP	REMARKS
31	V301-260-006-00	NUT/M6	*	1					
32	V411-260-006-00	WASHER / M6	*	1					
33	V401-160-006-00	WASHER,SP/M 6	*	1					
34	6215-549-012-00	SPRING,STARTING	*	1					

FIG. 21 FUEL PIPE

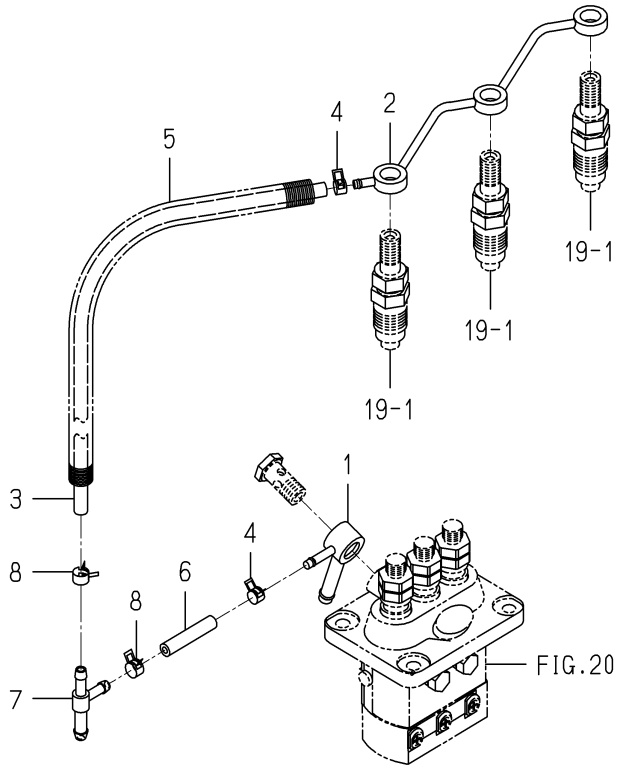

6004-550N-0100

KEY	PART CODE	DESCRIPTION	SPC	TYPE OF MODEL E3112 UP03		ITC	COL	GRP	REMARKS
1	6215-412-004-00	CONNECTOR/FUEL	*	1					
2	6215-411-125-00	PIPE/FUEL	*	1					
3	6209-360-018-00	HOSE/RUBBER/160	*	1					
4	J062-076-082-00	CLIP/HOSE/7.6-8.2	*	2					
5	6209-360-143-00	CORRUGATEDTUBE	*	1					
6	6209-360-006-00	HOSE,RUBBER	*	1					
7	3643-586-001-00	JOINTT-TYPE	*	1					
8	J062-087-093-00	CLIP/HOSE/8.7-9.3	*	2					

FIG. 22 ADAPTER

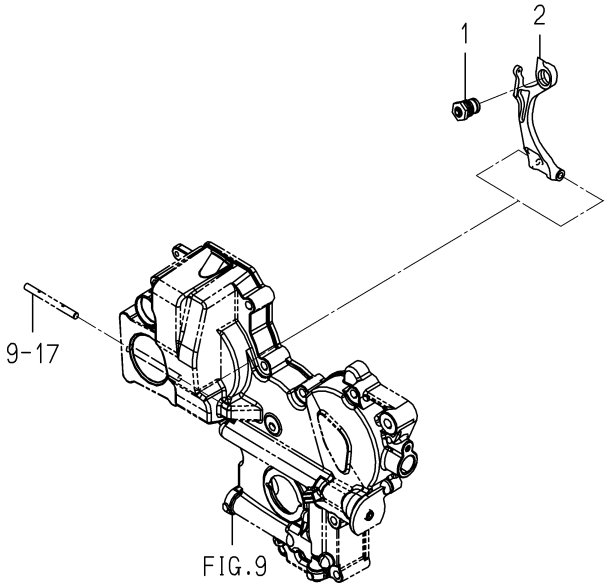

6004-560Q-0100

KEY	PART CODE	DESCRIPTION	SPC	TYPE OF MODEL E3112 UP03		ITC	COL	GRP	REMARKS
1	6215-548-082-10	ADAPTER/320X080 ASSY	*	1					
2	6215-541-016-40	ARM/TENSION	*	1					

FIG. 23 ELECTRIC (1)

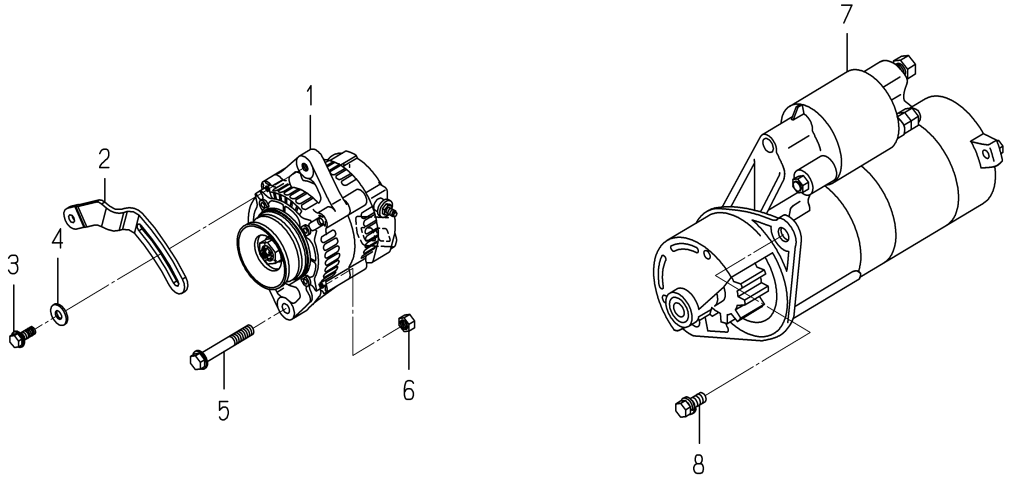

6004-801T-0100,6004-801T-0200

KEY	PART CODE	DESCRIPTION	SPC	TYPE OF MODEL E3112 UP03		ITC	COL	GRP	REMARKS
1	2182-104-520-00	GENERATOR ASSY	*	1					
2	6213-674-046-00	PLATE/ADJUST	*	1					
3	V231-360-802-00	FLANGEBOLT	*	1					
4	1373-121-001-00	WASHER/9X22X2	*	1					
5	V233-361-007-00	FLANGEBOLT	*	1					
6	6209-440-007-00	NUT/FLANGE/M10	*	1					
7	6281-100-014-00	STARTER ASSY	*	1					FIG 028
8	6901-911-025-00	BOLT	*	2					

FIG. 24 ELECTRIC (2)

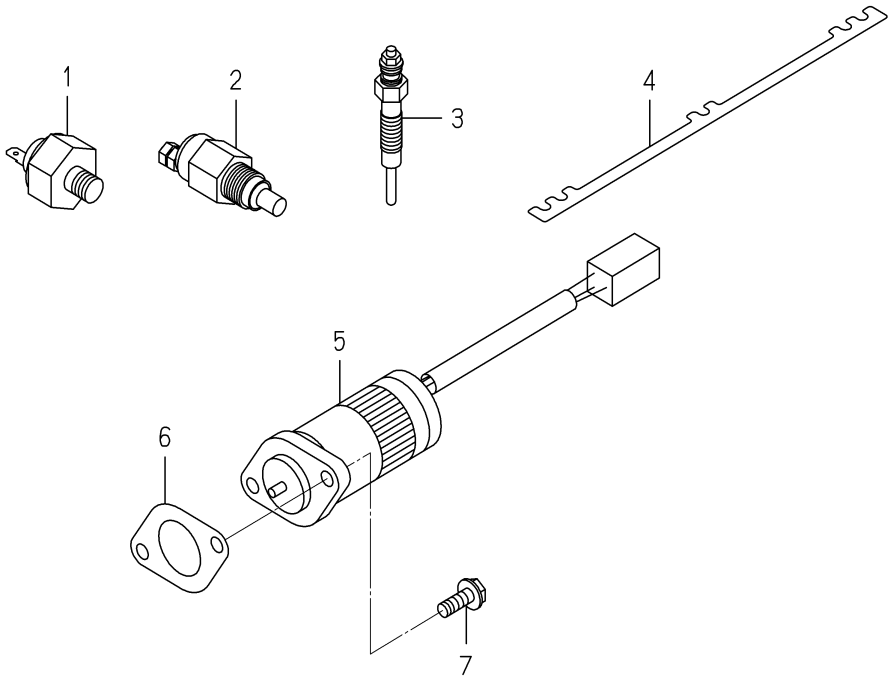

6004-821D-0100,6004-821D-0200

KEY	PART CODE	DESCRIPTION	SPC	TYPE OF MODEL E3112 UP03		ITC	COL	GRP	REMARKS
1	6281-971-001-10	SWITCH/OILPRESSURE	*	1					
2	6282-450-008-00	SWITCH/OVERHEAT	*	1					
3	6281-410-026-10	GLOWPLUG	*	3					
4	6219-732-017-00	CONNECTOR/GLOWPLUG	*	1					
5	6281-910-013-00	SOLENOID	*	1					
6	6209-630-002-10	GASKET	*	1					
7	V230-360-601-60	FLANGEBOLT	*	2					

FIG. 25 REPAIR PARTS(OPTION)

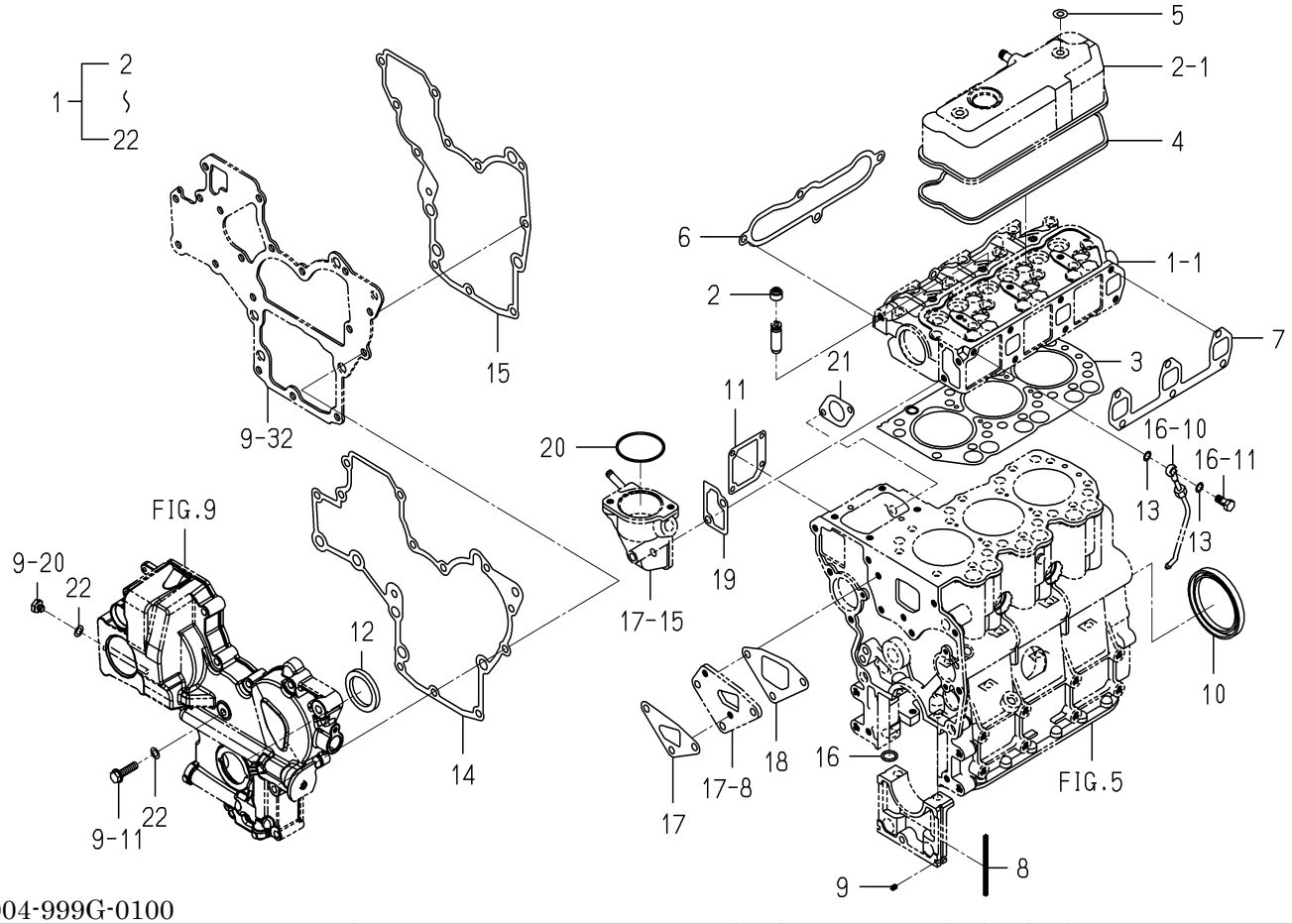

6004-999G-0100

KEY	PART CODE	DESCRIPTION	SPC	TYPE OF MODEL E3112 UP03		ITC	COL	GRP	REMARKS
1	6287-810-035-00	REPAIR/ENGINE SET	T	1					
2	6212-569-002-00	SEAL,OIL	T	6					
3	6211-141-029-20	GASKET/CYLINDERHEAD	T	1					
4	6211-173-003-00	SEAL,CYL.HEAD COVER	T	1					
5	6209-572-003-00	GASKET	T	2					
6	6214-115-001-20	GASKET,INLET MANIFOL	T	1					
7	6214-145-001-30	GASKET,EXH.MANIFOLD	T	1					
8	6211-258-001-00	SEAL,BEARING CAP	T	4					
9	6211-258-002-00	SEAL,BEARING CAP/7	T	2					
10	6209-625-001-00	SEAL,OIL	T	1					
11	6211-292-001-20	GASKET/COVER	T	1					
12	6209-625-002-00	SEAL,OIL	T	1					
13	6209-920-002-00	PACKING	T	2					
14	6211-312-003-20	GASKET/GEARCASE	T	1					
15	6211-312-004-20	GASKET/PLATE	T	1					
16	V720-102-401-50	O-RING/P15	T	1					
17	6213-614-003-10	GASKET/WATER PUMP	T	1					
18	6213-614-004-10	GASKET,SPACER	T	1					
19	6213-743-002-10	GASKET/HOUSING	T	1					
20	V723-102-005-50	O-RING	T	1					
21	6209-630-002-10	GASKET	T	1					
22	6209-500-003-00	WASHER/08X14X01	T	2					

FIG. 26 COMPONENT PARTS FOR 6215-300-036-10 ON Fig.19

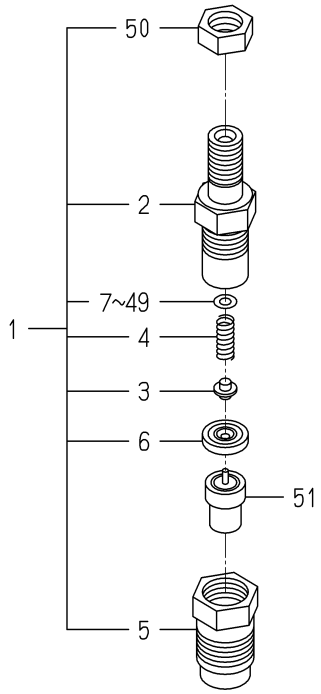

6215-300-036-1B

KEY	PART CODE	DESCRIPTION	SPC	TYPE OF MODEL E3112 UP03		ITC	COL	GRP	REMARKS
1	6215-330-024-10	HOLDER/NOZZLE ASSY	*	3					
2	6215-331-008-00	BODY/NOZZLE HOLDER	*	3					
3	6215-342-001-00	PIN,NOZZLE HOLDER	*	3					
4	6215-343-001-00	SPRING/NOZZLEHOLDER	*	3					
5	6215-332-013-00	NUT/NOZZLERETAINING	*	3					
6	6215-339-001-00	PIECE,DISTANCE	*	3					
7	6215-345-001-00	WASHER/0.9	*	3					
8	6215-345-002-00	WASHER/0.925	*	3					
9	6215-345-003-00	WASHER/0.95	*	3					
10	6215-345-004-00	WASHER/0.975	*	3					
11	6215-345-005-00	WASHER/1.0	*	3					
12	6215-345-006-00	WASHER/1.025	*	3					
13	6215-345-007-00	WASHER/1.05	*	3					
14	6215-345-008-00	WASHER/1.075	*	3					
15	6215-345-009-00	WASHER/1.1	*	3					
16	6215-345-010-00	WASHER/1.125	*	3					
17	6215-345-011-00	WASHER/1.15	*	3					
18	6215-345-012-00	WASHER/1.175	*	3					
19	6215-345-013-00	WASHER/1.2	*	3					
20	6215-345-014-00	WASHER/1.225	*	3					
21	6215-345-015-00	WASHER/1.25	*	3					
22	6215-345-016-00	WASHER/1.275	*	3					
23	6215-345-017-00	WASHER/1.3	*	3					
24	6215-345-018-00	WASHER/1.325	*	3					
25	6215-345-019-00	WASHER/1.35	*	3					
26	6215-345-020-00	WASHER/1.375	*	3					
27	6215-345-021-00	WASHER/1.4	*	3					
28	6215-345-022-00	WASHER/1.425	*	3					
29	6215-345-023-00	WASHER/1.45	*	3					
30	6215-345-024-00	WASHER/1.475	*	3					

FIG. 26 COMPONENT PARTS FOR 6215-300-036-10 ON Fig.19

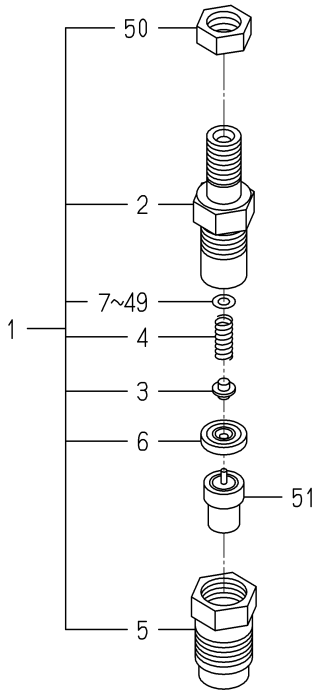

6215-300-036-1B

KEY	PART CODE	DESCRIPTION	SPC	TYPE OF MODEL E3112 UP03		ITC	COL	GRP	REMARKS
31	6215-345-025-00	WASHER/1.5	*	3					
32	6215-345-026-00	WASHER/1.525	*	3					
33	6215-345-027-00	WASHER/1.55	*	3					
34	6215-345-028-00	WASHER/1.575	*	3					
35	6215-345-029-00	WASHER/1.6	*	3					
36	6215-345-030-00	WASHER/1.625	*	3					
37	6215-345-031-00	WASHER/1.65	*	3					
38	6215-345-032-00	WASHER/1.675	*	3					
39	6215-345-033-00	WASHER/1.7	*	3					
40	6215-345-034-00	WASHER/1.725	*	3					
41	6215-345-035-00	WASHER/1.75	*	3					
42	6215-345-036-00	WASHER/1.775	*	3					
43	6215-345-037-00	WASHER/1.8	*	3					
44	6215-345-038-00	WASHER/1.825	*	3					
45	6215-345-039-00	WASHER/1.85	*	3					
46	6215-345-040-00	WASHER/1.875	*	3					
47	6215-345-041-00	WASHER/1.9	*	3					
48	6215-345-042-00	WASHER/1.925	*	3					
49	6215-345-043-00	WASHER/1.95	*	3					
50	6215-359-002-00	NUT	*	3					
51	6215-311-027-00	NOZZLE ASSY	*	3					

FIG. 27 COMPONENT PARTS FOR 6215-600-156-20 ON Fig.20

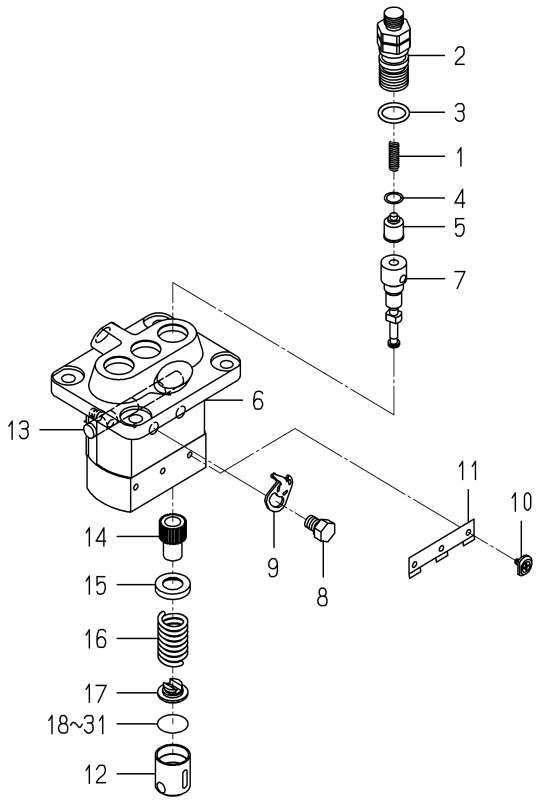

6215-600-156-2E

KEY	PART CODE	DESCRIPTION	SPC	TYPE OF MODEL E3112 UP03		ITC	COL	GRP	REMARKS
1	6215-643-006-00	SPRING/DELIVERYVALVE	*	3					
2	6215-644-007-00	HOLDER/DELIVERYVALVE	*	3					
3	6215-649-019-00	ORING	*	3					
4	6215-649-002-00	GASKET/DELIVERYVALVE	*	3					
5	6215-641-006-00	VALVE ASSY	*	3					
6	6215-611-001-00	HOUSING ASSY	*	1					
7	6215-631-035-00	ELEMENT ASSY	*	3					
8	6215-619-022-00	BOLT/WASHERHEAD	*	2					
9	6215-612-001-00	PLATE/ADJUSTING	*	2					
10	6215-629-001-00	PIN/INJECTIONPUMP	*	3					
11	6215-629-002-00	PLATE	*	1					
12	6215-622-001-00	TAPPET/INJECTIO ASSY	*	3					
13	6215-637-001-00	RACK/CONTROL ASSY	*	1					
14	6215-635-001-00	SLEEVE/PLUNGER	*	3					
15	6215-639-004-00	SEAT/SPRING/UPPER	*	3					
16	6215-634-001-00	SPRING/PUMPPLUNGER	*	3					
17	6215-639-005-00	SEAT/SPRING/LOWER	*	3					
18	6215-629-003-00	PLATE/TAPPET/AD 0.6	*	1					
19	6215-629-004-00	PLATE/TAPPET/AD 0.7	*	1					
20	6215-629-005-00	PLATE/TAPPET/AD 0.8	*	1					
21	6215-629-006-00	PLATE/TAPPET/AD 0.9	*	1					
22	6215-629-007-00	PLATE/TAPPET/AD 1.0	*	1					
23	6215-629-008-00	PLATE/TAPPET/AD 0.2	*	1					
24	6215-629-009-00	PLATE/TAPPET/AD 0.3	*	1					
25	6215-629-010-00	PLATE/TAPPET/AD 0.4	*	1					
26	6215-629-011-00	PLATE/TAPPET/AD 0.5	*	3					
27	6215-629-012-00	PLATE/TAPPET/AD 0.25	*	1					
28	6215-629-013-00	PLATE/TAPPET/AD 0.35	*	1					
29	6215-629-014-00	PLATE/TAPPET/AD 0.45	*	1					
30	6215-629-015-00	PLATE/TAPPET/AD 0.55	*	1					

FIG. 27 COMPONENT PARTS FOR 6215-600-156-20 ON Fig.20

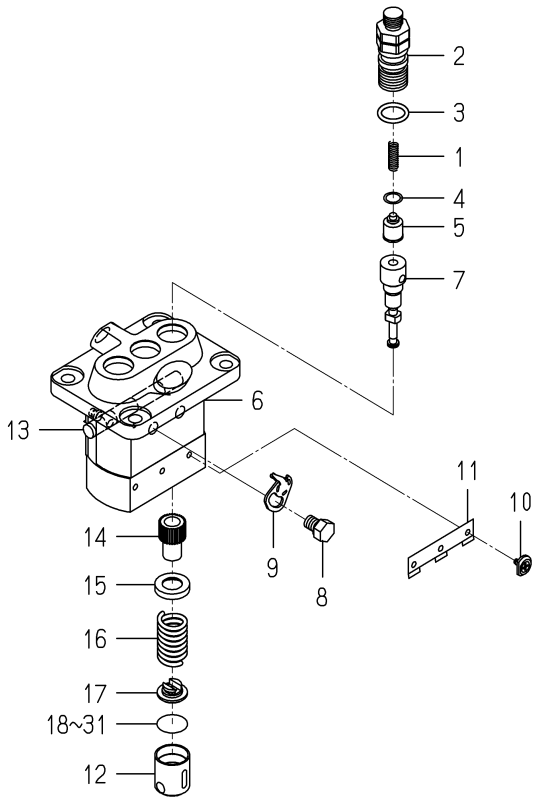

6215-600-156-2E

KEY	PART CODE	DESCRIPTION	SPC	TYPE OF MODEL E3112 UP03		ITC	COL	GRP	REMARKS
31	6215-629-016-00	PLATE/TAPPET/AD 0.65	*	1					

FIG. 28 COMPONENT PARTS FOR 6281-100-014-00 ON Fig.23

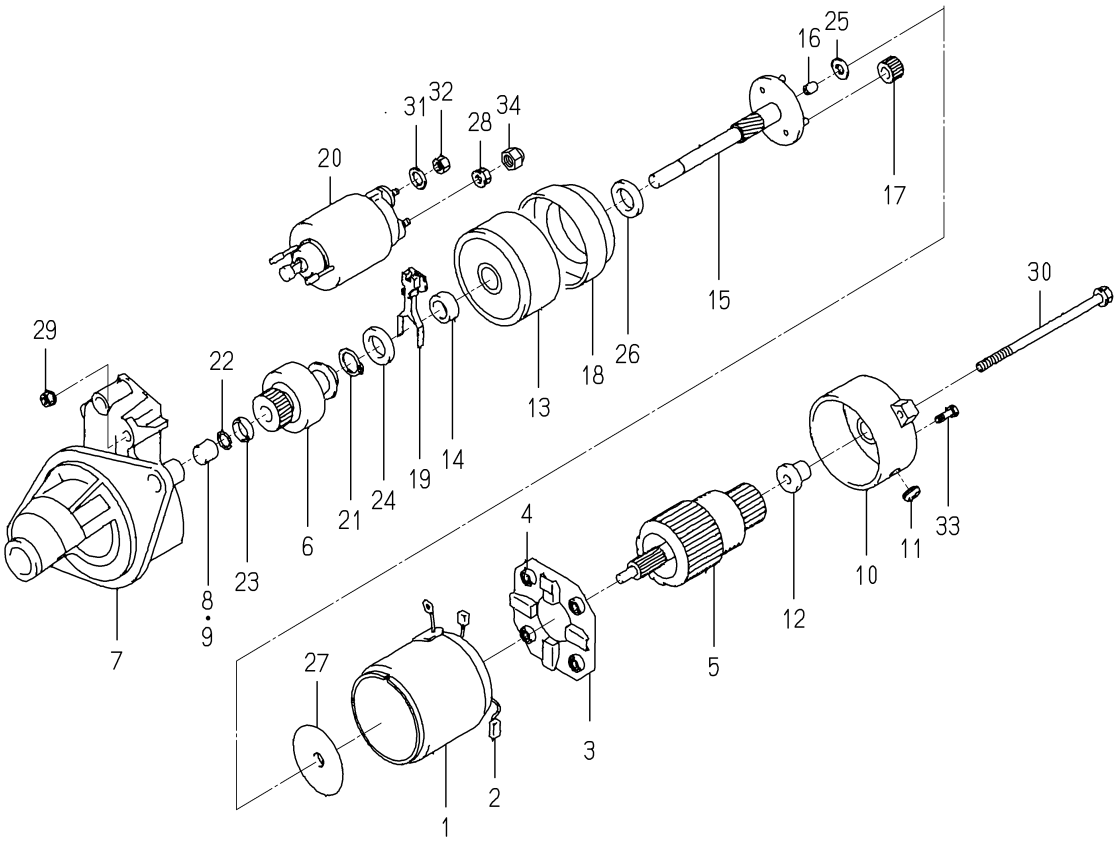

6281-100-014-0A

KEY	PART CODE	DESCRIPTION	SPC	TYPE OF MODEL E3112 UP03		ITC	COL	GRP	REMARKS
1	6281-111-009-00	YOKE/STARTER ASSY	*	1					
2	6281-119-009-00	BRUSH/STARTER	*	2					
3	6281-118-007-00	HOLDER/STARTER ASSY	*	1					
4	6281-117-003-00	SPRING/STARTERBRUSH	*	4					
5	6281-121-010-00	ARMATURE/STARTE ASSY	*	1					
6	6281-124-011-00	CLUTCH/STARTER ASSY	*	1					
7	6281-129-064-00	HOUSING/STARTER ASSY	*	1					
8	6281-129-080-00	BEARING/NEEDLE	*	1					
9	6281-129-058-00	BEARING/NEEDLE	*	1					
10	6281-115-017-00	FRAME/COMMUTATOR END	*	1					
11	6281-115-018-00	COVER	*	1					
12	6281-129-065-00	BEARING/OILLESS	*	1					
13	6281-129-066-00	BEARING/WITH SHOCKAB	*	1					
14	6281-129-067-00	BEARING/OILLESS	*	1					
15	6281-129-068-00	SHAFT/STARTER PLANET	*	1					
16	6281-129-069-00	BEARING/OILLESS	*	1					
17	6281-129-070-00	GEAR/STARTER PLANETA	*	3					
18	6281-129-071-00	GEAR/STARTERINTERNAL	*	1					
19	6281-127-003-00	LEVER/PINIONDRIVE	*	1					
20	6281-151-014-00	SWITCH/MAGNETIC ASSY	*	1					
21	6281-129-072-00	RING/SNAP	*	1					
22	6281-129-073-00	RING/SNAP	*	1					
23	6281-129-074-00	NUT/PINIONSTOP	*	1					
24	6281-129-075-00	WASHER/SK	*	1					
25	6281-129-076-00	WASHER/SK	*	1					
26	6281-129-077-00	WASHER/SK	*	1					
27	6281-129-078-00	PLATE	*	1					
28	6281-129-030-00	NUT	*	1					
29	6281-129-029-00	NUT	*	2					
30	6281-129-043-00	BOLT/THROUGH	*	2					

FIG. 28 COMPONENT PARTS FOR 6281-100-014-00 ON Fig.23

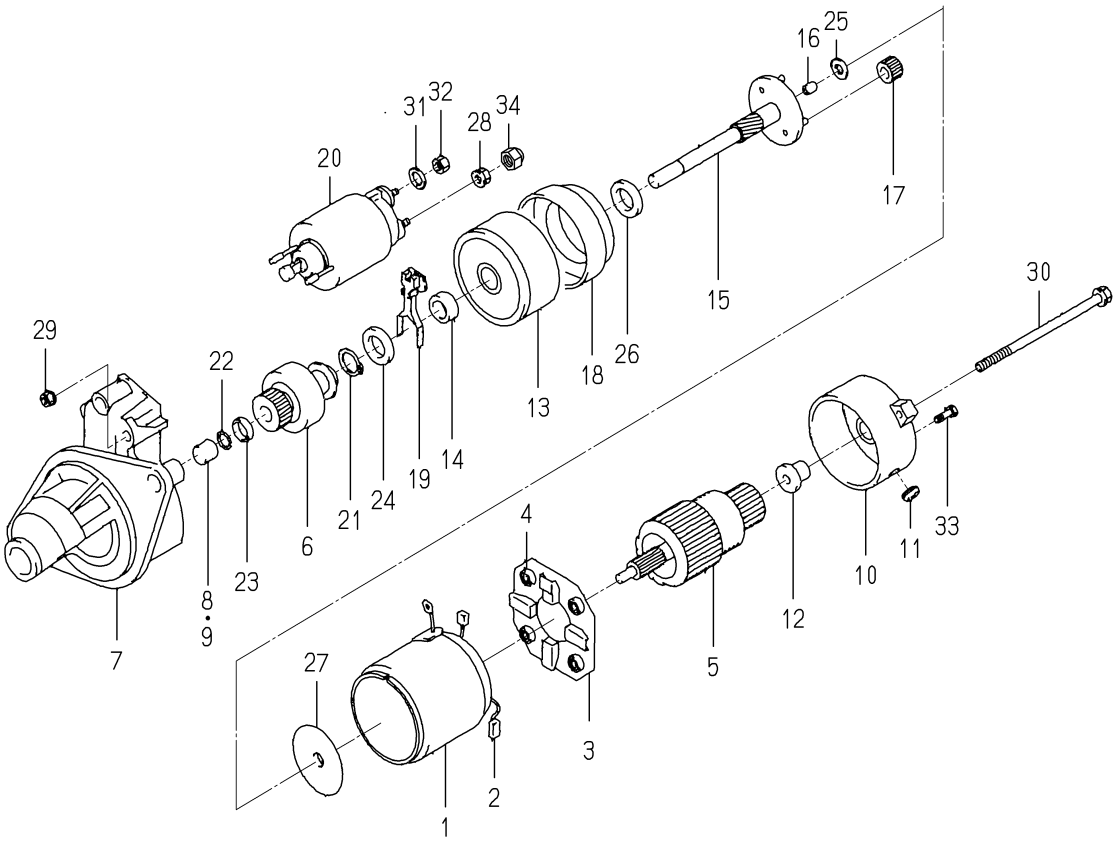

6281-100-014-0A

KEY	PART CODE	DESCRIPTION	SPC	TYPE OF MODEL E3112 UP03		ITC	COL	GRP	REMARKS
31	6909-150-508-00	WASHER	*	1					
32	6909-110-408-00	NUT/M8	*	1					
33	6281-129-062-00	SCREW	*	2					
34	6281-129-079-00	NUT	*	1					

C H A S S I S

FIG. 1 MUFFLER SYSTEM(G TYPE)

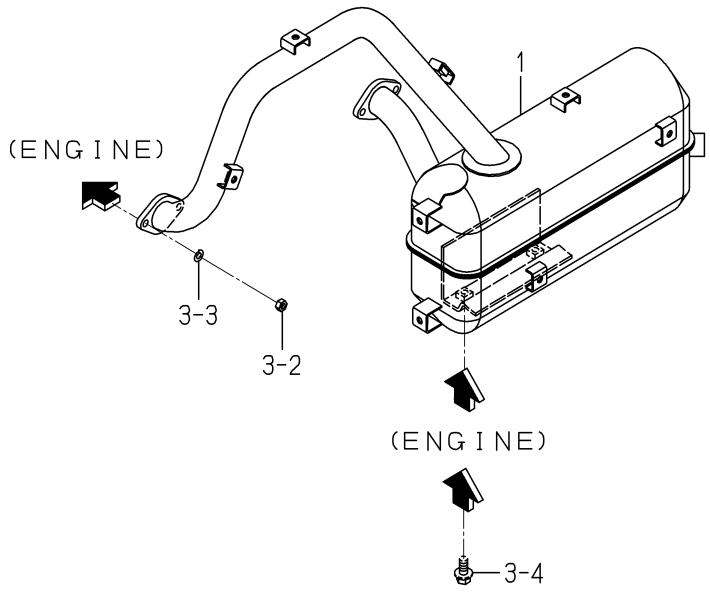

2232-101 -0100

KEY	PART CODE	DESCRIPTION	SPC	TYPE OF MODEL		ITC	COL	GRP	REMARKS
				NP60E16					
1	2204-101-950-00	MUFFLER/FD620 COMP	*	1					

FIG. 2 GUIDE(HARNESS/ENGINE)SYSTEM(D TYPE)

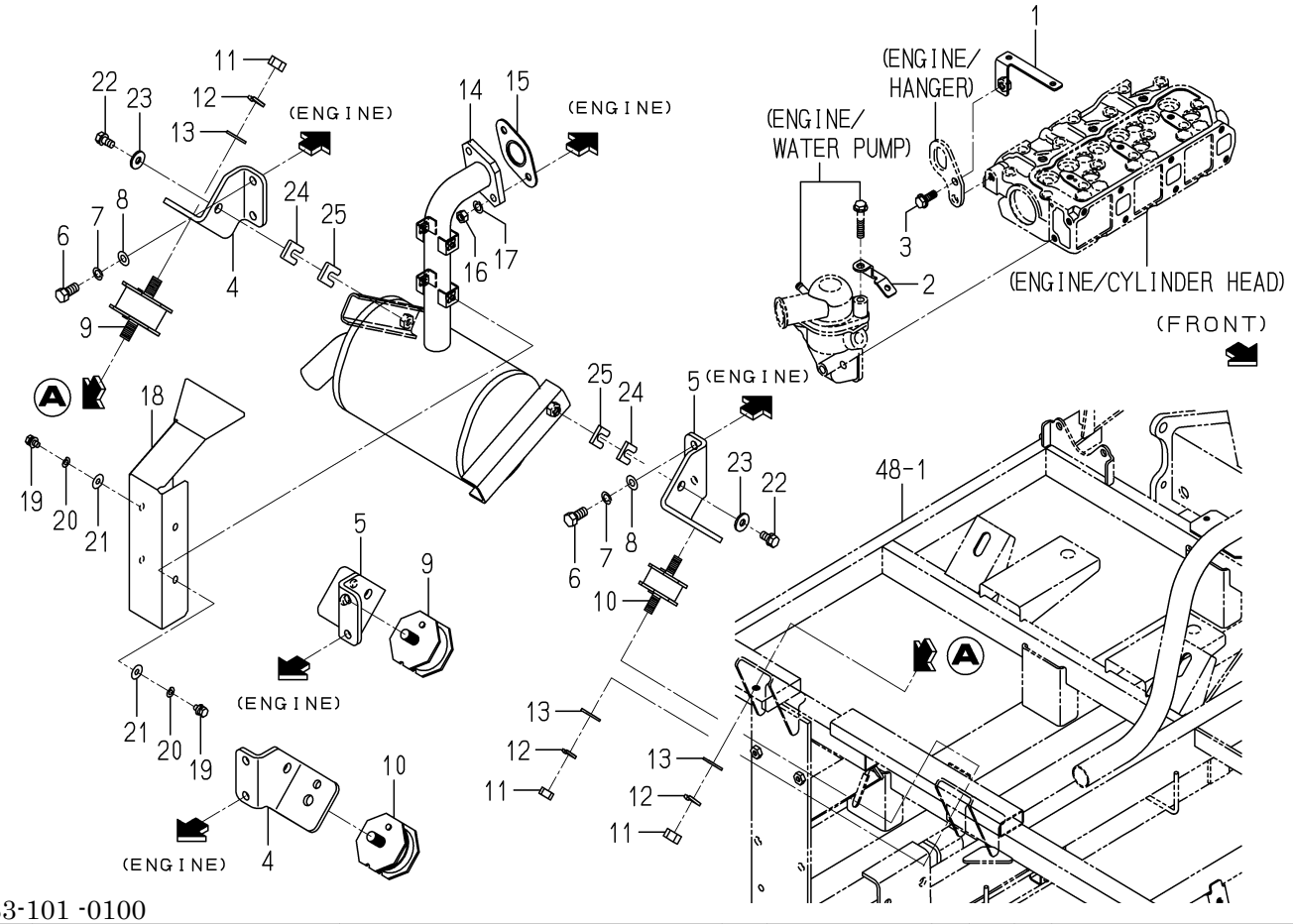

2233-101 -0100

KEY	PART CODE	DESCRIPTION	SPC	TYPE OF MODEL NP60E16		ITC	COL	GRP	REMARKS
1	2213-101-210-00	GUIDE/HARNESS COMP	*	1					
2	2213-101-018-00	GUIDE/HARNESS/A	*	1					
3	V231-360-802-00	FLANGEBOLT	*	1					
4	2213-101-001-10	BRACKET/ENGINE/A	*	2					
5	2213-101-002-10	BRACKET/ENGINE/B	*	2					
6	V203-461-002-20	BOLT	*	8					
7	V401-160-010-00	WASHER,SP/M10	*	8					
8	V411-260-010-00	WASHER/M10	*	8					
9	3623-150-003-10	INSULATOR/MOUNT/LH	*	2					
10	3656-302-009-10	INSULATOR/MOUNT/34	*	2					
11	V304-260-012-00	NUT/M12	*	8					
12	V401-160-012-00	WASHER,SP/M12	*	8					
13	V411-260-012-00	WASHER /M12	*	8					
14	2233-101-500-00	MUFFLER/D COMP	*	1					
15	3659-301-001-00	GASKET	*	1					
16	V304-700-008-00	NUT	*	2					
17	V401-700-008-00	WASHER/LOCK	*	2					
18	2233-101-007-00	COVER/EXAUST/NP8	*	1					
19	V200-700-601-20	BOLT	*	4					
20	V401-700-006-00	WASHER/LOCK	*	4					
21	3560-503-302-00	WASHER,WIRE TENSION	*	4					
22	V211-260-802-00	BOLT/S	*	2					
23	4106-102-028-00	WASHER	*	2					
24	2213-101-015-10	SHIM/MUFFLER	*	2					
25	2213-101-016-00	SHIM/MUFFLER	*	2					

FIG. 3 RADIATOR SYSTEM(G TYPE)

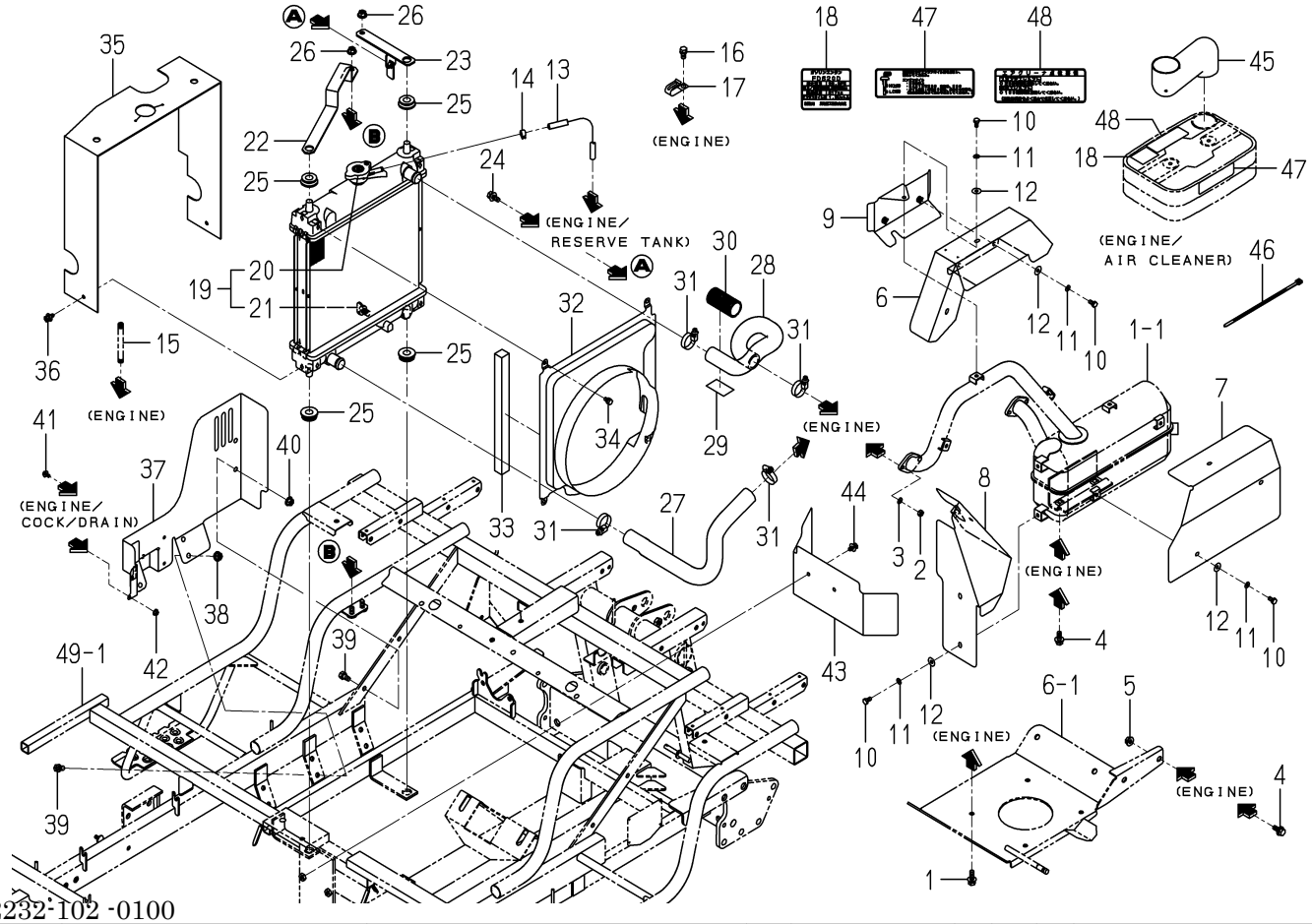

2232-102 -0100

KEY	PART CODE	DESCRIPTION	SPC	TYPE OF MODEL NP60E16		ITC	COL	GRP	REMARKS
1	V211-360-802-50	BOLT/SP	*	4					
2	V301-700-006-00	NUT	*	4					
3	V401-700-006-00	WASHER/LOCK	*	4					
4	V211-360-802-00	BOLT/SP	*	4					
5	V362-260-008-00	NUT/WASHER	*	2					
6	2213-101-250-10	COVER/EXHAUST/F COMP	*	1					
7	2232-101-004-00	COVER/MUFFLER/NP	*	1					
8	2204-101-001-20	COVER/EXT	*	1					
9	2204-101-390-50	COVER/MUFFLER/G COMP	*	1					
10	V200-700-601-20	BOLT	*	10					
11	V401-700-006-00	WASHER/LOCK	*	10					
12	3560-503-302-00	WASHER,WIRE TENSION	*	9					
13	2232-101-002-00	HOSE/300	*	1					
14	J062-111-120-00	CLIP/HOSE/11.1-12	*	1					
15	2213-101-027-00	CORRUGATED TUBE/07X0	*	1					
16	V211-260-801-60	BOLT,SEMS (S) M8X16	*	1					
17	1425-621-004-00	HOLDER/JE/9-9	*	1					
18	2200-911-004-00	LABEL/ENGINE	*	1					
19	2213-102-300-10	RADIATOR/G ASSY	*	1					
20	1650-102-202-10	CAP	*	1					
21	3822-330-601-00	COCK	*	1					
22	2232-102-011-20	STAY/RADIATOR/UPPER/	*	1					
23	2232-102-250-10	STAY/RADIATOR/UPPER/	*	1					
24	V211-360-802-00	BOLT/SP	*	1					
25	1719-730-002-00	GROMMET/15X17X05	*	4					
26	V362-260-008-00	NUT/WASHER	*	2					
27	2232-101-061-00	HOSE/COOLING/LOWER/6	*	1					
28	2213-101-602-10	HOSE/COOLING/UPPER/6	*	1					
29	4132-303-003-00	PLATE/RUBBER/30X50X0	*	1					
30	2232-102-022-00	CORRUGATETUBE/28X65	*	1					

FIG. 3 RADIATOR SYSTEM(G TYPE)

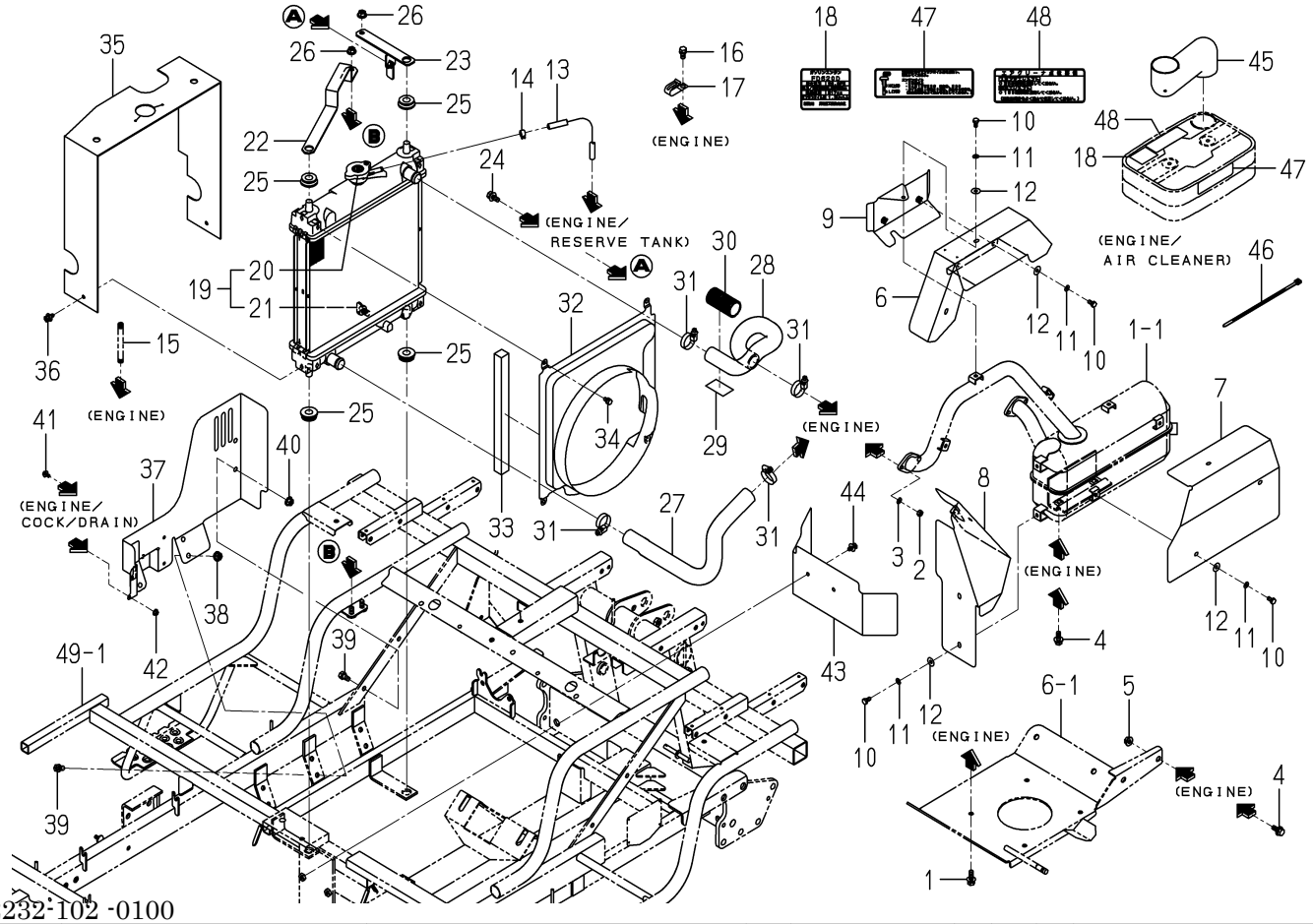

2232-102 -0100

KEY	PART CODE	DESCRIPTION	SPC	TYPE OF MODEL NP60E16		ITC	COL	GRP	REMARKS
31	J061-120-032-00	CLAMP/WORM/20-32	*	4					
32	2204-102-002-00	SHROUD/FD620/E18	*	1					
33	1716-782-005-00	INSULATOR/20X280	*	2					
34	V210-360-601-20	BOLT,SEMS	*	4					
35	2232-102-016-10	COVER/RADIATOR/UPPER	*	1					
36	2144-501-011-10	BOLT/M6X16X16	*	2					
37	2232-102-260-40	COVER/RADIATOR COMP	*	1					
38	V362-260-008-00	NUT/WASHER	*	2					
39	V211-260-801-60	BOLT,SEMS (S) M8X16	*	3					
40	V362-260-008-00	NUT/WASHER	*	1					
41	V120-365-001-20	SCREW/SP	*	1					
42	V360-260-005-00	NUT/M5	*	1					
43	2232-102-015-10	PARTITION/NP	*	1					
44	2144-501-011-10	BOLT/M6X16X16	*	2					
45	2232-102-007-00	HOSE/AIRCLEANER/FD62	*	1					
46	1342-402-006-00	BAND/WIRE/250	*	1					
47	2232-912-025-00	LABEL/OIL LEVEL/FD62	*	1					
48	2232-912-026-00	LABEL/AIR CLEANER/FD	*	1					

FIG. 4 RADIATOR SYSTEM(D TYPE)

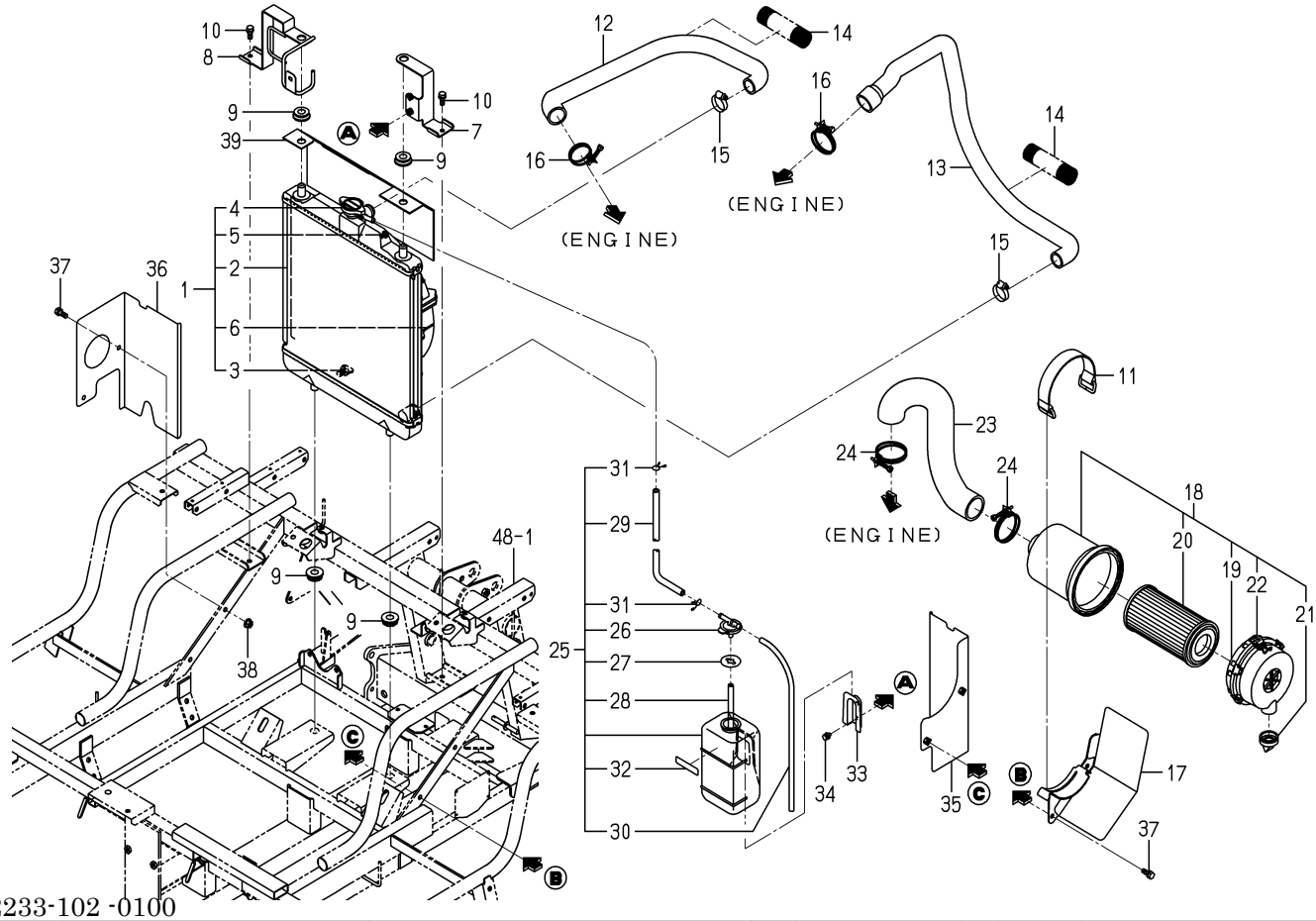

2233-102 -0100

KEY	PART CODE	DESCRIPTION	SPC	TYPE OF MODEL NP60E16		ITC	COL	GRP	REMARKS
1	2213-102-400-00	RADIATOR ASSY	*	1					
2	2213-102-401-00	RADIATOR/SUB ASSY	*	1					
3	2213-102-402-00	COCK ASSY	*	1					
4	2213-102-403-00	PRESSURECAP	*	1					
5	2213-102-404-00	FLANGEBOLT	*	2					
6	2213-102-405-00	SHROUDFAN ASSY	*	1					
7	2233-102-230-00	STAY/RADIATOR/L COMP	*	1					
8	2233-102-220-00	STAY/RADIATOR/R COMP	*	1					
9	1719-730-002-00	GROMMET/15X17X05	*	4					
10	V211-260-802-00	BOLT/S	*	2					
11	3640-260-200-30	BATTERYSTAY COMP	*	1					
12	2233-101-004-00	HOSE/RADIATOR/UPPER	*	1					
13	2233-101-005-00	HOSE/RADIATOR/ROWER	*	1					
14	2213-102-002-00	CORRUGATETUBE/28X120	*	2					
15	J061-123-035-00	CLAMP/WORM/23-35	*	2					
16	J061-236-044-00	CLAMP/WIRE/36-44	*	2					
17	2233-102-250-00	STAY/AIRCLEANER COMP	*	1					
18	1728-104-210-00	CLEANER/AIR ASSY	*	1					
19	1675-104-211-00	COVER ASSY	*	1					
20	1675-104-213-00	ELEMENT ASSY	*	1					
21	1544-104-205-00	VALVE	*	1					
22	1650-104-201-00	CLIP	*	2					
23	2233-101-006-00	HOSE/AIRCLEANER	*	1					
24	J061-249-060-00	CLAMP/WIRE/49-60	*	2					
25	3805-301-320-00	TANK,RESERVE	*	1					
26	6221-408-008-00	CAP	*	1					
27	6221-408-009-00	PACKING	*	1					
28	6221-408-010-00	HOSE/RUBBER	*	1					
29	3805-301-321-00	HOSE/RUBBER	*	1					
30	6221-408-011-00	PIPE	*	1					

FIG. 4 RADIATOR SYSTEM(D TYPE)

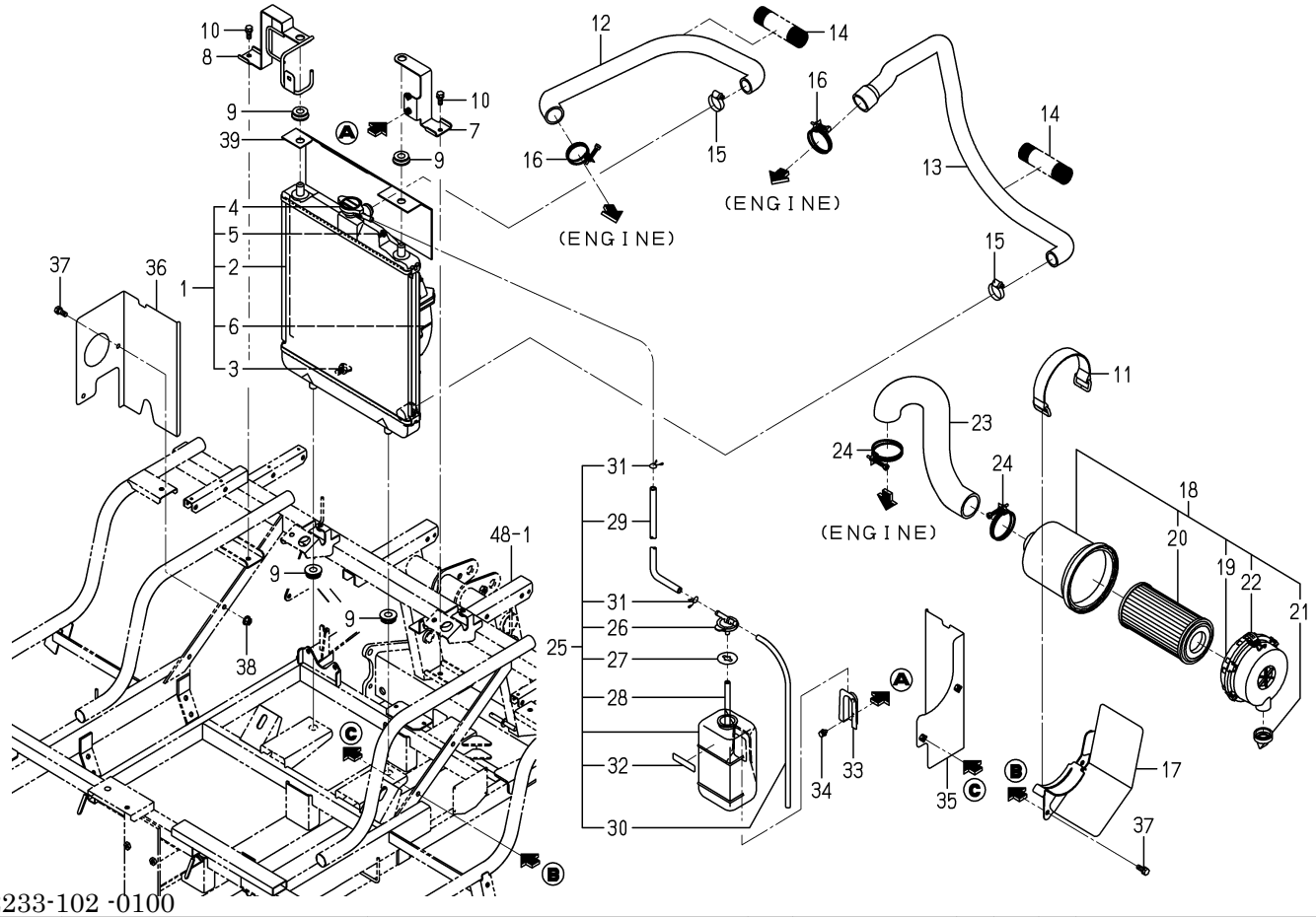

2233-102 -0100

KEY	PART CODE	DESCRIPTION	SPC	TYPE OF MODEL NP60E16		ITC	COL	GRP	REMARKS
31	6221-408-013-00	CLAMP	*	2					
32	6221-408-007-00	PLATE/CAUTION	*	1					
33	6221-408-003-00	BRACKET/RESERVETANK	*	1					
34	V210-360-601-20	BOLT,SEMS	*	2					
35	2233-102-350-00	COVER/RADIATOR/RH	*	1					
36	2233-102-006-00	COVER/RADIATOR/RH	*	1					
37	V211-260-802-00	BOLT/S	*	4					
38	V362-260-008-00	NUT/WASHER	*	2					
39	2213-102-052-00	COVER/RADIATOR/UPPER	*	1					

FIG. 5 GENERATOR SYSTEM(G TYPE)

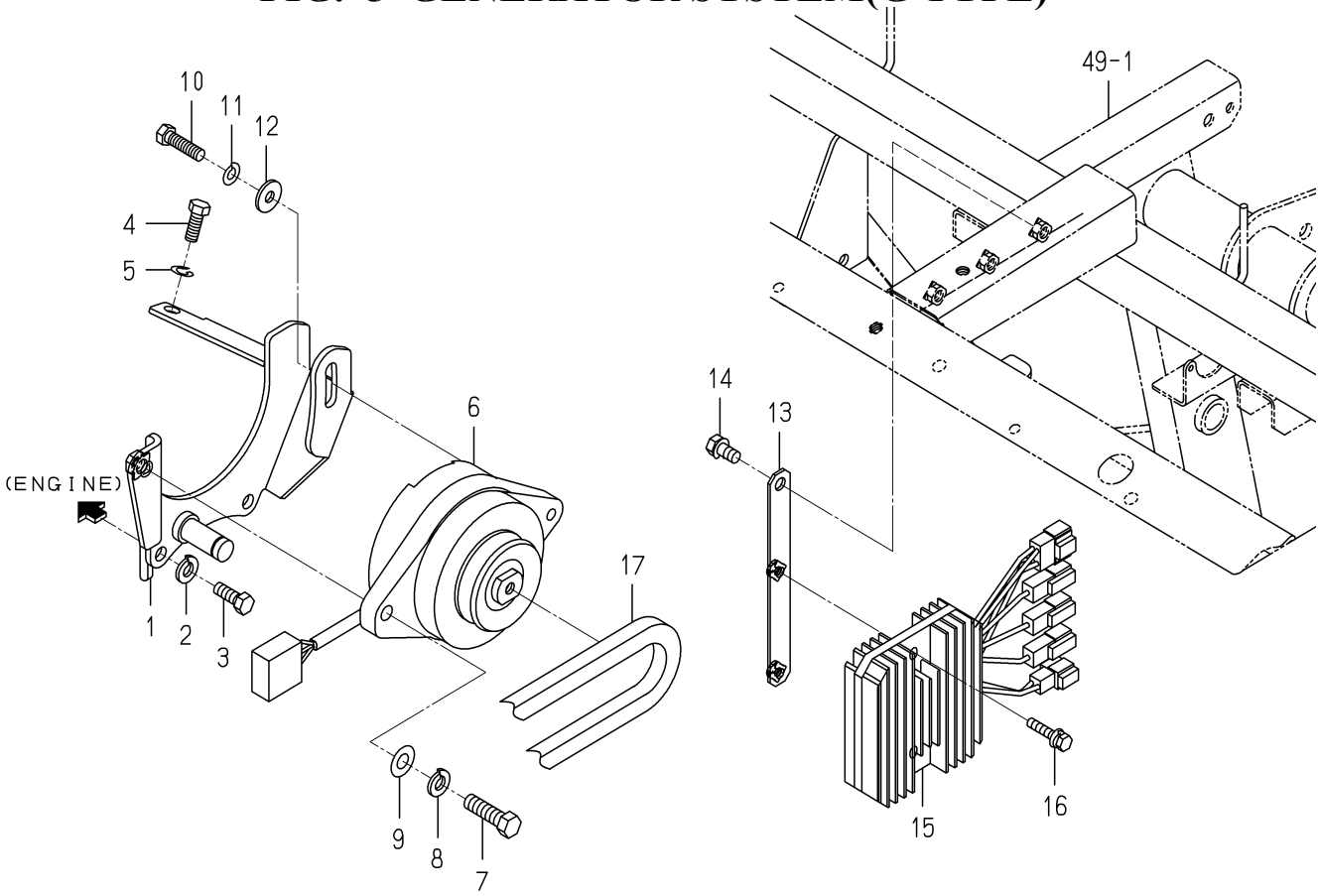

2232-102A-0100

KEY	PART CODE	DESCRIPTION	SPC	TYPE OF MODEL NP60E16		ITC	COL	GRP	REMARKS
1	2220-101-700-00	BRACKET/GENERATOR/FD	*	1					
2	V401-160-010-00	WASHER,SP/M10	*	2					
3	2162-105-001-00	BOLT/UNC3/8X22	*	2					
4	8836-102-002-00	BOLT/M8X20	*	1					
5	V401-160-008-00	WASHER,SP/M 8	*	1					
6	8841-101-300-00	GENERATOR	*	1					
7	V201-261-003-50	BOLT/M10X35	*	1					
8	V401-160-010-00	WASHER,SP/M10	*	1					
9	V411-260-010-00	WASHER/M10	*	1					
10	8836-103-002-00	BOLT/M8X30	*	1					
11	V401-160-008-00	WASHER,SP/M 8	*	1					
12	2144-735-006-00	WASHER	*	1					
13	2232-101-230-10	LATE/REGULATOR COMP	*	1					
14	V211-260-801-60	BOLT,SEMS (S) M8X16	*	1					
15	8844-101-002-10	REGULATOR/Z ASSY	*	1					
16	V210-360-603-00	BOLT/SP	*	2					
17	8844-101-001-00	BELT/VA023	*	1					

FIG. 6 BASE(ENGINE)SYSTEM(G TYPE)

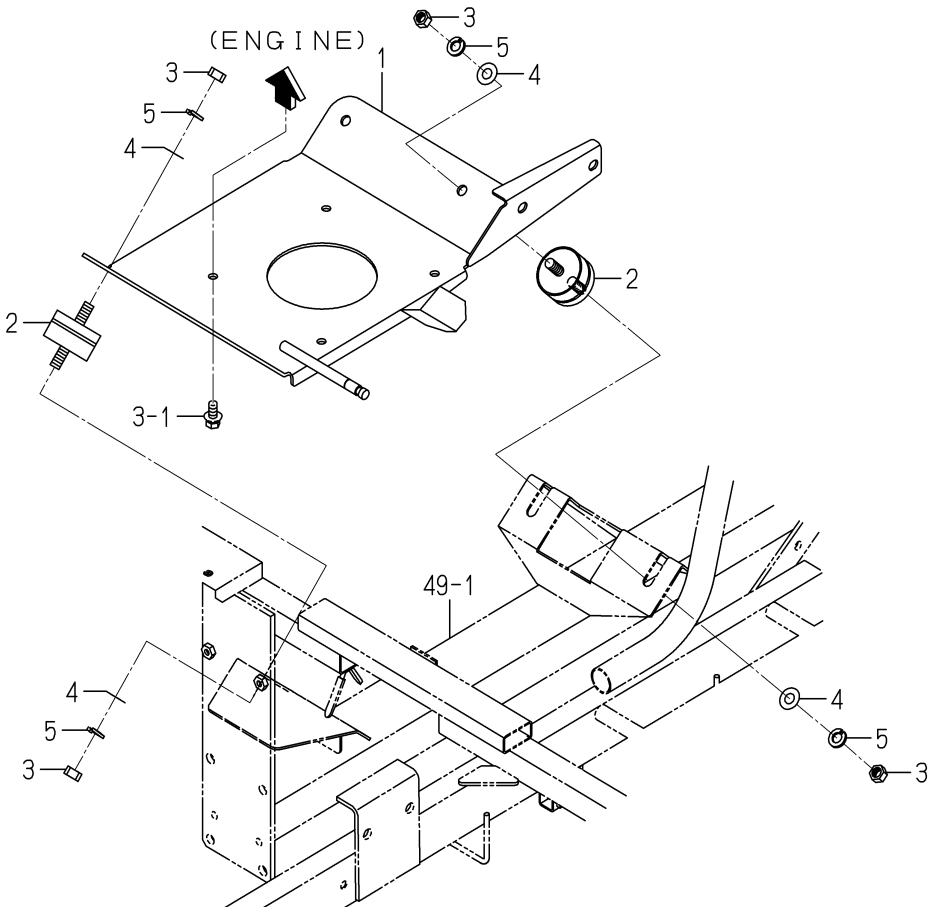

2232-103 -0100

KEY	PART CODE	DESCRIPTION	SPC	TYPE OF MODEL NP60E16		ITC	COL	GRP	REMARKS
1	2232-103-200-00	BASE/ENGINE/HG COMP	*	1					
2	2161-103-001-00	INSULATOR	*	4					
3	V304-260-010-00	NUT	*	8					
4	V411-260-010-00	WASHER/M10	*	8					
5	V401-160-010-00	WASHER,SP/M10	*	8					

FIG. 7 PULLEY(ENGINE)SYSTEM(G TYPE)

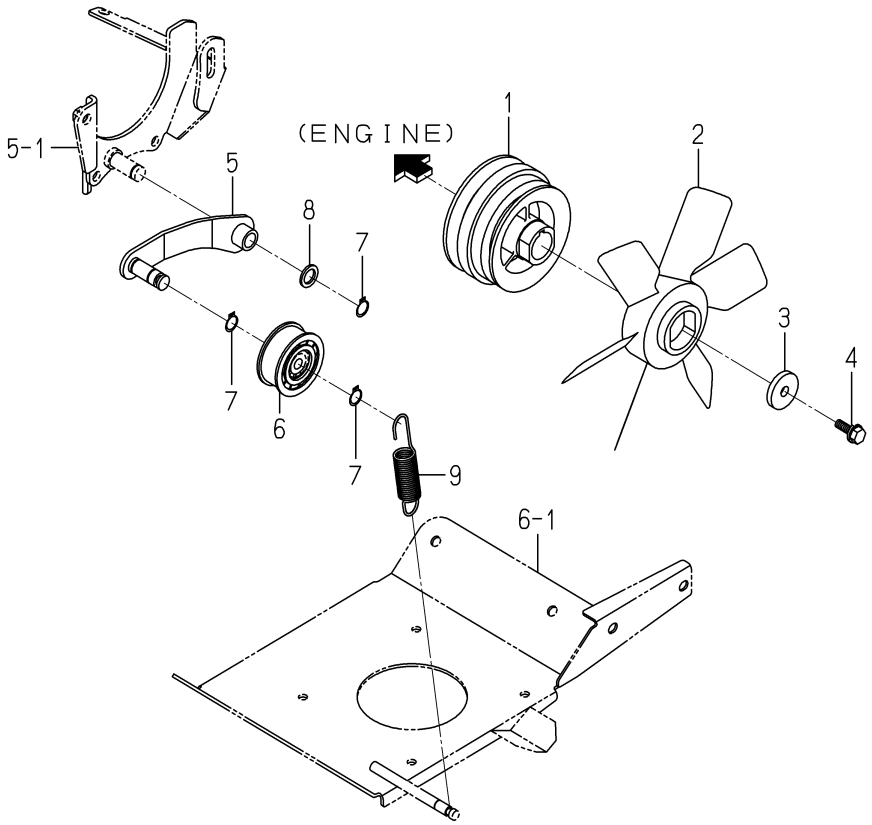

2232-105 -0100

KEY	PART CODE	DESCRIPTION	SPC	TYPE OF MODEL NP60E16		ITC	COL	GRP	REMARKS
1	2232-105-005-10	PULLEY/VB115/VA106	*	1					
2	2204-105-009-00	FAN/COOLING/HG	*	1					
3	2204-105-013-00	WASHER/11X46X06	*	1					
4	2204-601-007-00	BOLT/SEAL/M10X25/S	*	1					
5	2204-105-240-20	ARM/TENSION/FD COMP	*	1					
6	3621-211-002-00	PULLEY,TENSION	*	1					
7	V704-140-015-00	RING,SNAP/15 C	*	3					
8	2144-337-007-00	WASHER	*	1					
9	2194-106-002-00	SPRING/HE110	*	1					

FIG. 8 PULLEY(ENGINE)SYSTEM(D TYPE)

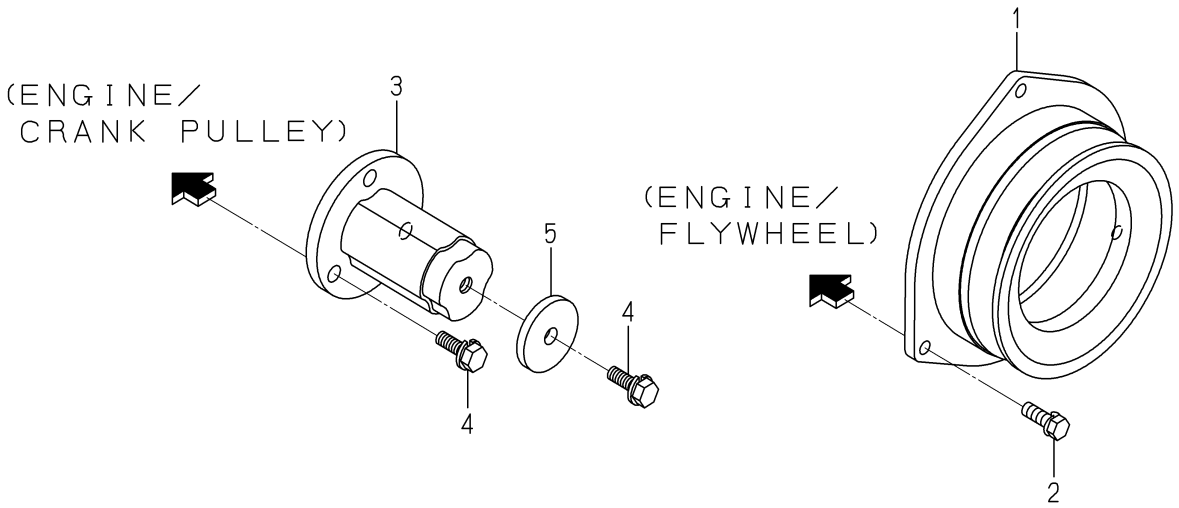

2233-105 -0100

KEY	PART CODE	DESCRIPTION	SPC	TYPE OF MODEL NP60E16		ITC	COL	GRP	REMARKS
1	2233-105-003-00	PULLEY/VC140	*	1					
2	V211-260-802-50	BOLT/S	*	3					
3	2233-105-004-00	BASE/COOLINGFAN/D	*	1					
4	2194-338-003-20	BOLT/M10X25	*	4					
5	2204-105-013-00	WASHER/11X46X06	*	1					

FIG. 9 STAY(ARM/TENSION)SYSTEM(D TYPE)

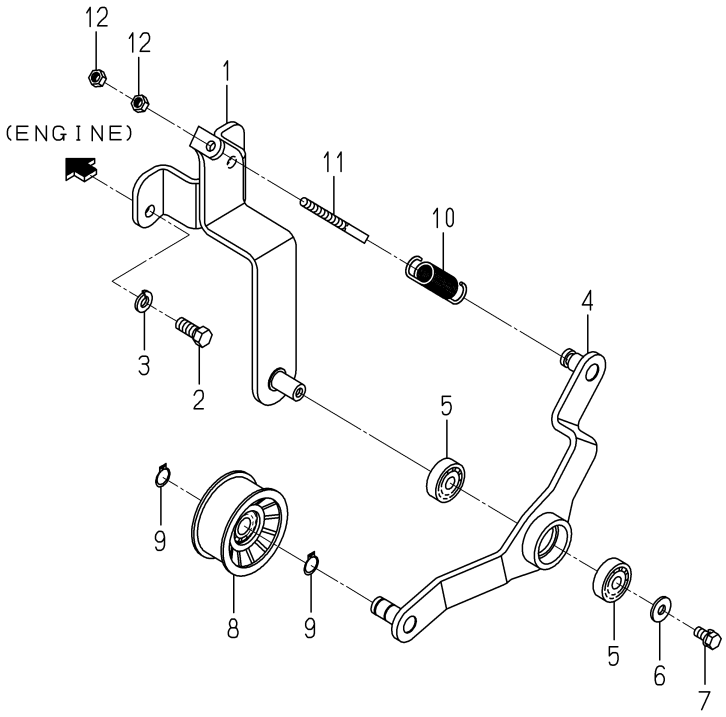

2233-106 -0100

KEY	PART CODE	DESCRIPTION	SPC	TYPE OF MODEL NP60E16		ITC	COL	GRP	REMARKS
1	2233-106-210-00	BASE/TENSION/D	*	1					
2	V203-461-002-50	BOLT/M10X25	*	2					
3	V401-160-010-00	WASHER,SP/M10	*	2					
4	2233-106-200-00	ARM/TENSION COMP	*	1					
5	V600-150-620-20	BEARING,RB/6202SS	*	2					
6	4106-102-028-00	WASHER	*	1					
7	V211-260-801-60	BOLT,SEMS (S) M8X16	*	1					
8	3737-314-003-00	PULLEY,TENSION/70BS	*	1					
9	V704-140-015-00	RING,SNAP/15 C	*	2					
10	2188-105-004-00	SPRING/HE089	*	1					
11	2142-407-002-10	ROD,ADJUST/90	*	1					
12	V304-260-008-00	NUT	*	2					

FIG. 10 TANK(FUEL)SYSTEM(G TYPE)

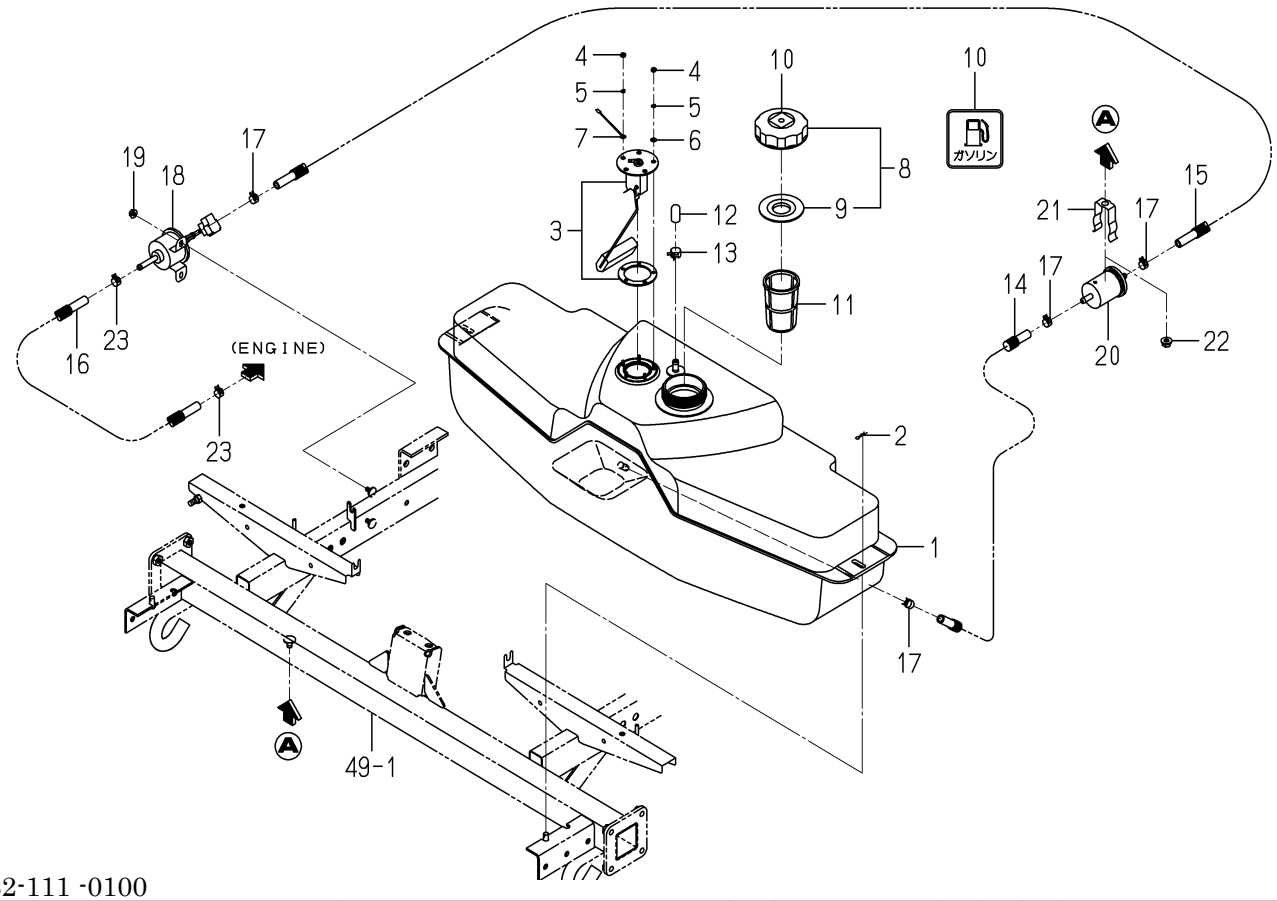

2232-111 -0100

KEY	PART CODE	DESCRIPTION	SPC	TYPE OF MODEL NP60E16		ITC	COL	GRP	REMARKS
1	2232-111-001-10	TANK/FUEL/NP	*	1					
2	3908-170-020-00	PIN/SNAP/08	*	2					
3	2213-111-300-10	GAUGE/FUEL/0-57 ASSY	*	1					
4	V301-260-004-00	NUT/M4	*	5					
5	V401-160-004-00	WASHER,SP/M 4	*	5					
6	V411-260-004-00	WASHER,PL/M 4	*	4					
7	2204-111-006-10	HARNESS/SWGND/5	*	1					
8	1747-111-410-10	CAP/TANK/E1 ASSY	*	1					
9	1729-111-284-00	PACKING	*	1					
10	2500-907-017-00	LABEL/PETROL	*	1					
11	1729-111-006-10	FILTER/FUEL	*	1					
12	2213-111-014-00	CAP/9	*	1					
13	J062-147-159-00	CLIP/HOSE/14.7-15.9	*	1					
14	2204-111-005-40	HOSE/FUEL/210	*	1					
15	2232-111-007-00	HOSE/FUEL/340	*	1					
16	2232-111-008-00	HOSE/FUEL/660	*	1					
17	J062-126-134-00	CLIP/HOSE/12.6-13.4	*	4					
18	2221-111-200-00	PUMP/FUEL ASSY	*	1					
19	V360-260-006-00	NUT/M6	*	2					
20	3830-311-210-00	FILTER,FUEL	*	1					
21	6219-755-001-00	HOLDER(FUEL FILTER)	*	1					
22	V362-260-008-00	NUT/WASHER	*	1					
23	J062-138-148-00	CLIP/HOSE/13.8-14.8	*	2					

FIG. 11 TANK(FUEL)SYSTEM(D TYPE)

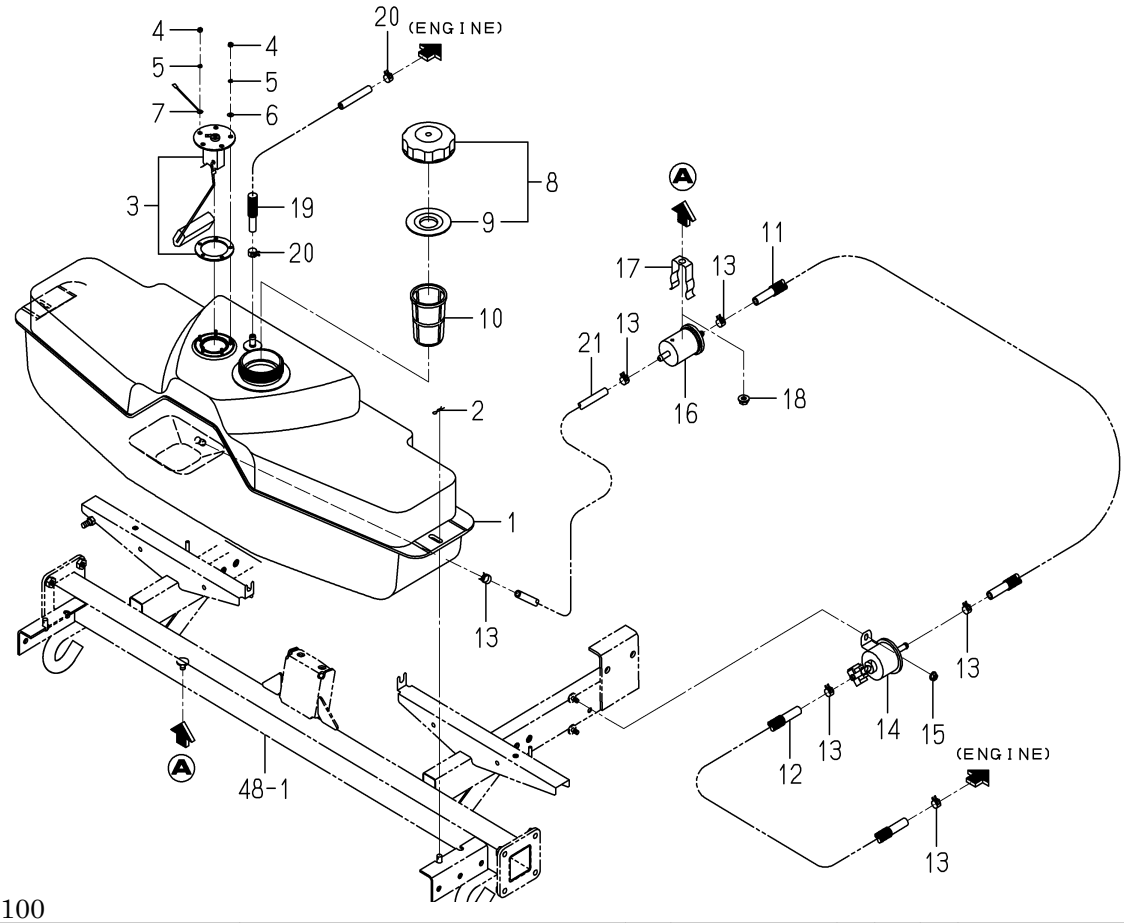

2233-111 -0100

KEY	PART CODE	DESCRIPTION	SPC	TYPE OF MODEL NP60E16		ITC	COL	GRP	REMARKS
1	2232-111-001-10	TANK/FUEL/NP	*	1					
2	3908-170-020-00	PIN/SNAP/08	*	2					
3	2213-111-300-10	GAUGE/FUEL/0-57 ASSY	*	1					
4	V301-260-004-00	NUT/M4	*	5					
5	V401-160-004-00	WASHER,SP/M 4	*	5					
6	V411-260-004-00	WASHER,PL/M 4	*	4					
7	2204-111-006-10	HARNESS/SWGND/5	*	1					
8	1747-111-410-10	CAP/TANK/E1 ASSY	*	1					
9	1729-111-284-00	PACKING	*	1					
10	1729-111-006-10	FILTER/FUEL	*	1					
11	2232-111-007-00	HOSE/FUEL/340	*	1					
12	2232-111-006-00	HOSE/FUEL/1280	*	1					
13	J062-126-134-00	CLIP/HOSE/12.6-13.4	*	6					
14	2221-111-200-00	PUMP/FUEL ASSY	*	1					
15	V360-260-006-00	NUT/M6	*	2					
16	3830-311-210-00	FILTER,FUEL	*	1					
17	6219-755-001-00	HOLDER(FUEL FILTER)	*	1					
18	V362-260-008-00	NUT/WASHER	*	1					
19	2213-111-002-10	HOSE/07X11X1750	*	1					
20	J062-126-134-00	CLIP/HOSE/12.6-13.4	*	2					
21	2204-111-025-00	HOSE/07X11X460	*	1					

FIG. 12 LEVER(HST)SYSTEM(G TYPE)

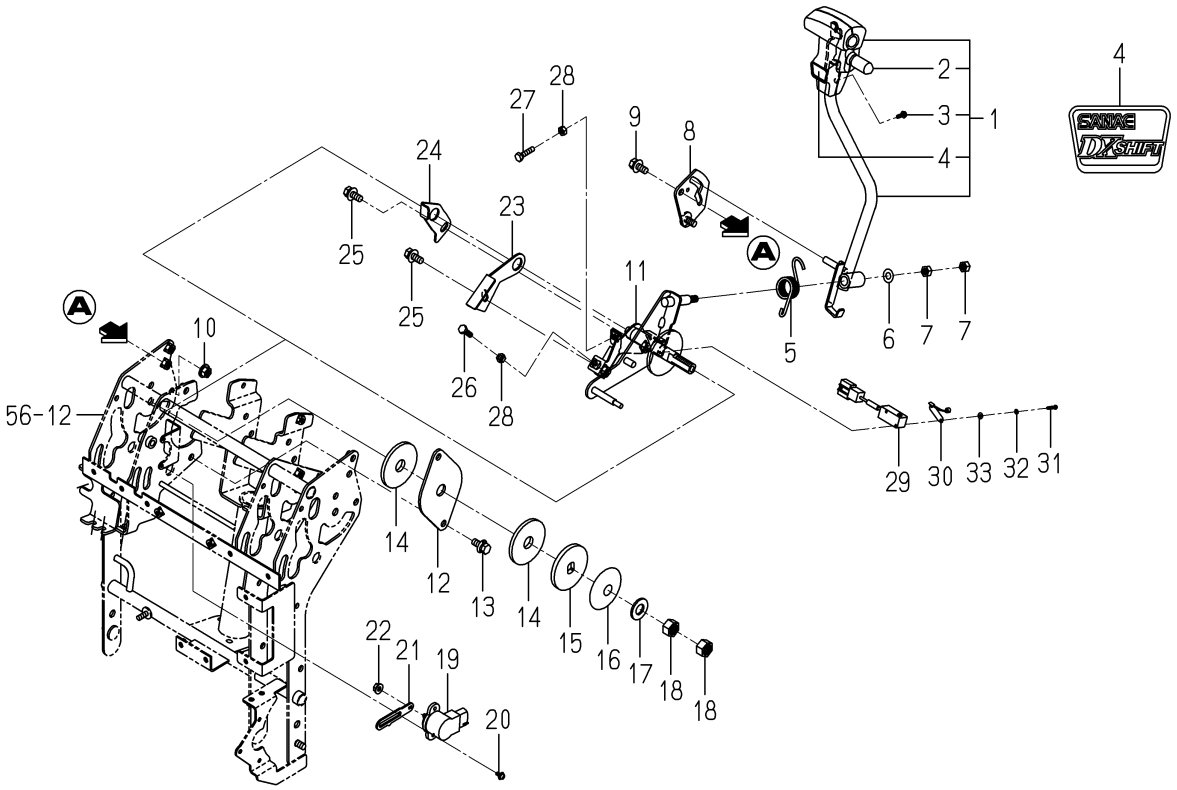

2232-124 -0100

KEY	PART CODE	DESCRIPTION	SPC	TYPE OF MODEL NP60E16		ITC	COL	GRP	REMARKS
1	2232-124-200-20	LEVER/HST/NP SET	*	1					
2	2204-124-631-00	CAP/SWITCH	*	1					
3	V120-376-001-20	SCREW/SP	*	2					
4	2232-912-023-00	ORNAMENT/DX/SHIFT	*	1					
5	2232-124-003-00	SPRING/HT025/HST	*	1					
6	V411-260-008-00	WASHER,PL/M 8	*	1					
7	V304-260-008-00	NUT	*	2					
8	2232-124-240-00	GUIDE/HST/NP COMP	*	1					
9	V211-360-802-00	BOLT/SP	*	1					
10	V362-260-008-00	NUT/WASHER	*	1					
11	2232-124-250-10	CAM/HST/NP COMP	*	1					
12	2232-124-001-00	PLATE/FLANGE/HST	*	1					
13	V211-360-802-00	BOLT/SP	*	2					
14	3864-225-001-00	LINING/HST	*	2					
15	3747-155-013-10	BRAKE/SLIPPERS/B	*	1					
16	3650-212-001-00	ARM,HST LEVER	*	1					
17	V411-260-014-00	WASHER,PL/M14	*	1					
18	V304-260-014-00	NUT/M14	*	2					
19	1729-662-340-00	SENSOR/ANGLE/110/R	*	1					
20	V120-364-001-00	SCREW/SP	*	2					
21	2232-124-004-10	SENSORARM/HSTLEVER	*	1					
22	V360-260-006-00	NUT/M6	*	1					
23	2204-124-005-00	CAM/HST/FRONT	*	1					
24	2204-124-006-00	CAM/HST/REAR	*	1					
25	V211-360-802-00	BOLT/SP	*	2					
26	V200-260-602-00	BOLT/M 6X20	*	1					
27	V200-260-602-50	BOLT/M 6X25	*	1					
28	V301-260-006-00	NUT/M6	*	2					
29	3807-836-350-00	SWITCH ASSY	*	1					
30	3807-836-400-00	ACTUATOR ASSY	*	1					

FIG. 12 LEVER(HST)SYSTEM(G TYPE)

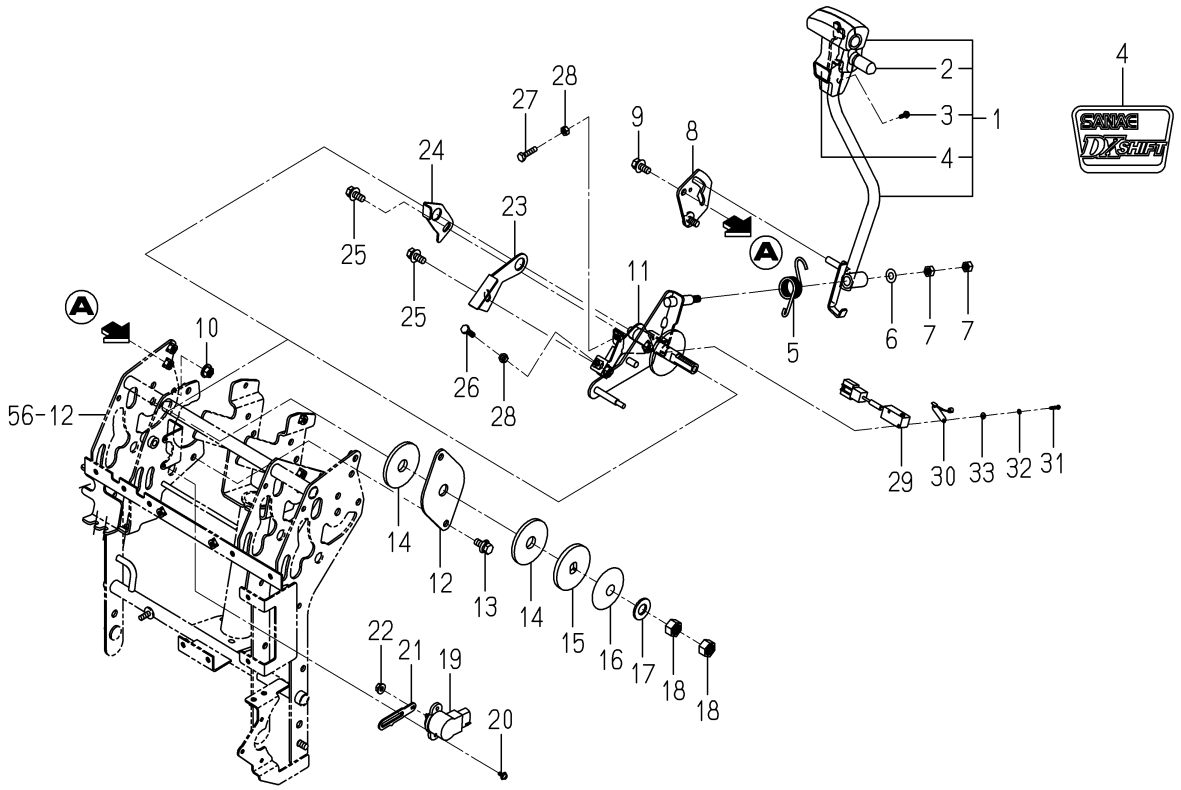

2232-124 -0100

KEY	PART CODE	DESCRIPTION	SPC	TYPE OF MODEL NP60E16		ITC	COL	GRP	REMARKS
31	V111-163-001-60	SCREW/M3X16	*	2					
32	V401-160-003-00	WASHER,SP/M 3	*	2					
33	V411-260-003-00	WASHER/M3	*	2					

FIG. 13 LEVER(HST)SYSTEM(D TYPE)

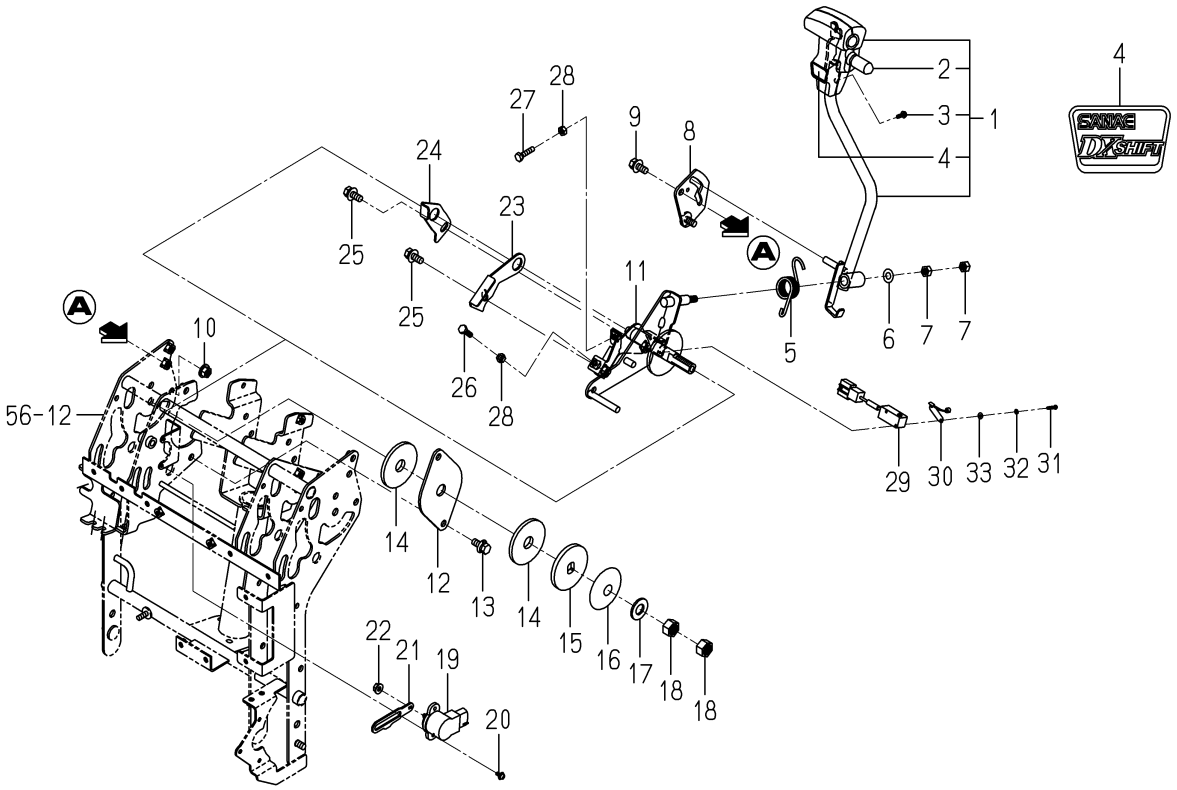

2233-124 -0100

KEY	PART CODE	DESCRIPTION	SPC	TYPE OF MODEL NP60E16		ITC	COL	GRP	REMARKS
1	2232-124-200-20	LEVER/HST/NP SET	*	1					
2	2204-124-631-00	CAP/SWITCH	*	1					
3	V120-376-001-20	SCREW/SP	*	2					
4	2232-912-023-00	ORNAMENT/DX/SHIFT	*	1					
5	2232-124-003-00	SPRING/HT025/HST	*	1					
6	V411-260-008-00	WASHER,PL/M 8	*	1					
7	V304-260-008-00	NUT	*	2					
8	2232-124-240-00	GUIDE/HST/NP COMP	*	1					
9	V211-360-802-00	BOLT/SP	*	1					
10	V362-260-008-00	NUT/WASHER	*	1					
11	2233-124-300-00	CAM/HST/D/NP COMP	*	1					
12	2232-124-001-00	PLATE/FLANGE/HST	*	1					
13	V211-360-802-00	BOLT/SP	*	2					
14	3864-225-001-00	LINING/HST	*	2					
15	3747-155-013-10	BRAKE/SLIPPERS/B	*	1					
16	3650-212-001-00	ARM,HST LEVER	*	1					
17	V411-260-014-00	WASHER,PL/M14	*	1					
18	V304-260-014-00	NUT/M14	*	2					
19	1729-662-340-00	SENSOR/ANGLE/110/R	*	1					
20	V120-364-001-00	SCREW/SP	*	2					
21	2233-124-004-00	SENSOR ARM/LEVER/HST	*	1					
22	V360-260-006-00	NUT/M6	*	1					
23	2233-124-005-00	CAM/HST/FRONT/NP	*	1					
24	2204-124-006-00	CAM/HST/REAR	*	1					
25	V211-360-802-00	BOLT/SP	*	2					
26	V200-260-602-00	BOLT/M 6X20	*	1					
27	V200-260-602-50	BOLT/M 6X25	*	1					
28	V301-260-006-00	NUT/M6	*	2					
29	3807-836-350-00	SWITCH ASSY	*	1					
30	3807-836-400-00	ACTUATOR ASSY	*	1					

FIG. 13 LEVER(HST)SYSTEM(D TYPE)

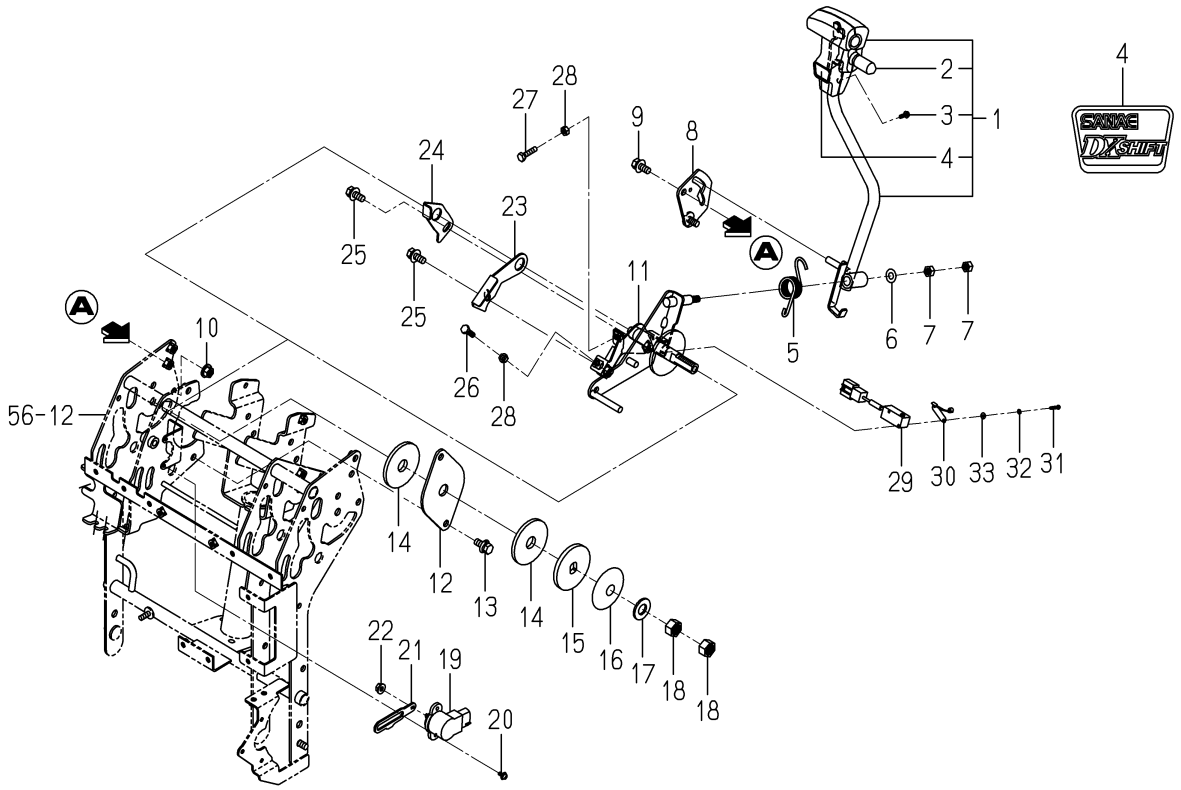

2233-124 -0100

KEY	PART CODE	DESCRIPTION	SPC	TYPE OF MODEL NP60E16		ITC	COL	GRP	REMARKS
31	V111-163-001-60	SCREW/M3X16	*	2					
32	V401-160-003-00	WASHER,SP/M 3	*	2					
33	V411-260-003-00	WASHER/M3	*	2					

FIG. 14 LEVER(CHANGE)SYSTEM

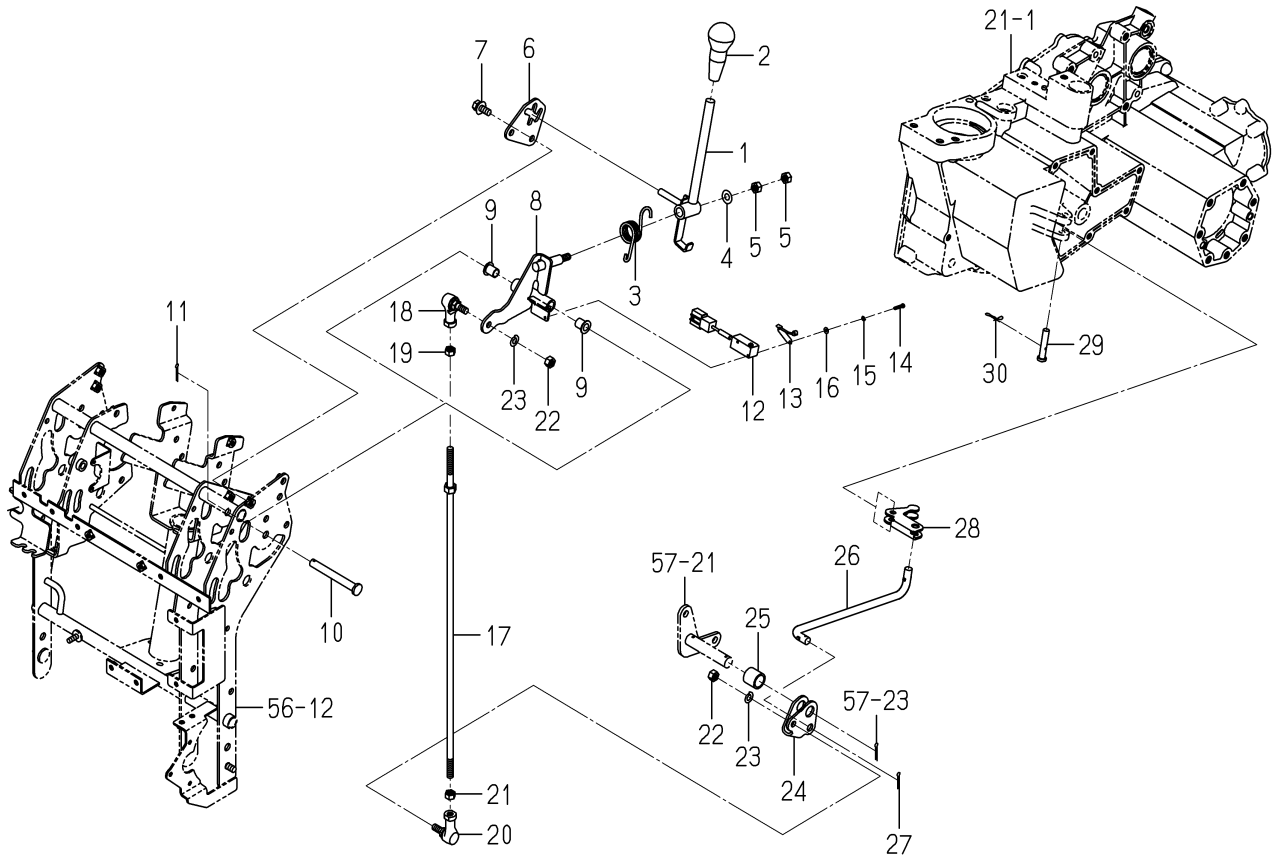

2232-125 -0100

KEY	PART CODE	DESCRIPTION	SPC	TYPE OF MODEL NP60E16		ITC	COL	GRP	REMARKS
1	2232-125-200-00	LEVER/CHANGE/NP COMP	*	1					
2	3103-210-051-00	LEVER/GLIP	*	1					
3	2232-125-006-00	SPRING/HT025/CHANGE	*	1					
4	V411-260-008-00	WASHER,PL/M 8	*	1					
5	V304-260-008-00	NUT	*	2					
6	2232-125-001-00	GUIDE/CHANGE/NP	*	1					
7	V211-360-802-00	BOLT/SP	*	2					
8	2232-125-250-00	CAM/CHANGE/NP COMP	*	1					
9	1110-401-002-00	BUSH/F/10X12X15	*	2					
10	2178-421-003-00	PIN	*	1					
11	V500-163-002-00	PIN,SPLIT/3 X20	*	1					
12	3807-836-350-00	SWITCH ASSY	*	1					
13	3807-836-400-00	ACTUATOR ASSY	*	1					
14	V111-163-001-60	SCREW/M3X16	*	2					
15	V401-160-003-00	WASHER,SP/M 3	*	2					
16	V411-260-003-00	WASHER/M3	*	2					
17	2232-125-230-00	ROD/CHANGE/NP COMP	*	1					
18	1560-695-021-00	JOINT BALL M08RH	*	1					
19	V304-260-008-00	NUT	*	1					
20	1560-695-022-00	JOINT BALL M08LH	*	1					
21	1560-132-007-30	NUT/M8	*	1					
22	V304-260-008-00	NUT	*	2					
23	V401-160-008-00	WASHER,SP/M 8	*	2					
24	2232-125-007-00	PLATE/COUNTER/CHANGE	*	1					
25	2232-125-009-00	COLLAR/17X22X20	*	1					
26	2232-125-003-00	ROD/CHANGE/LOWER/NP	*	1					
27	V500-163-002-00	PIN,SPLIT/3 X20	*	1					
28	2232-125-005-00	SHIFTER/CHANGE/NP	*	1					
29	2232-125-008-00	PIN/08X41	*	1					
30	2161-735-006-00	PIN	*	1					

FIG. 15 HST SYSTEM(G TYPE)

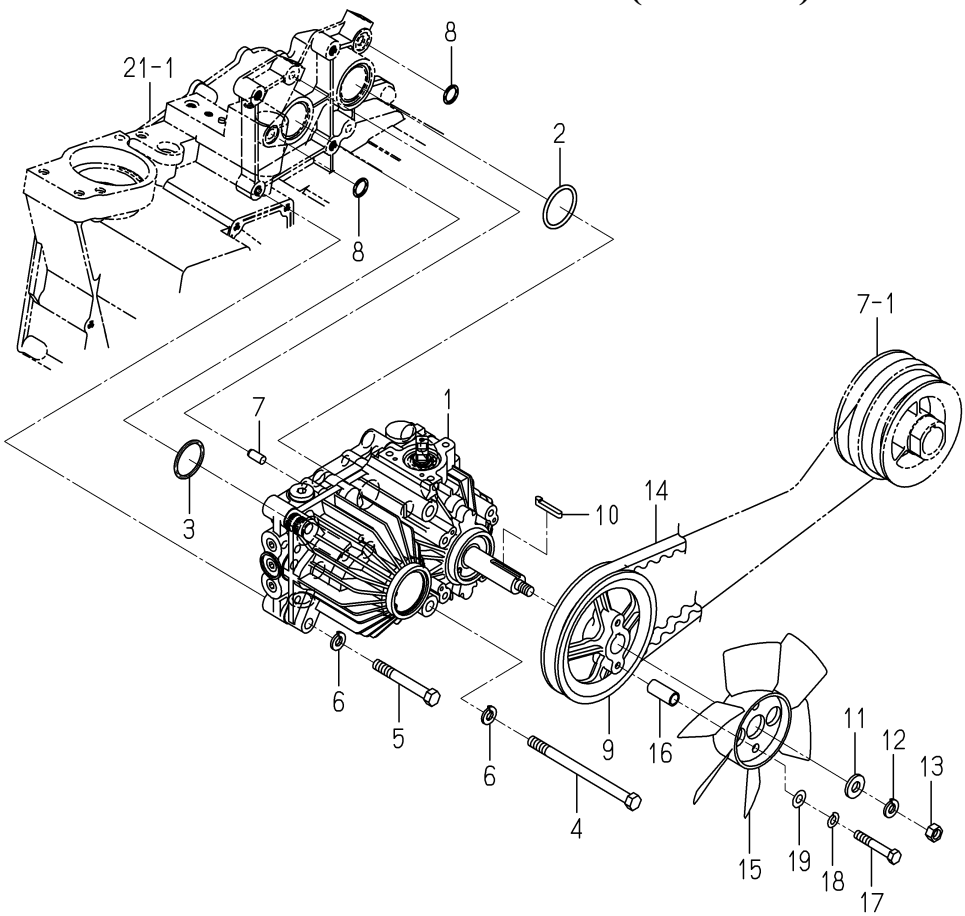

2232-131 -0100

KEY	PART CODE	DESCRIPTION	SPC	TYPE OF MODEL NP60E16		ITC	COL	GRP	REMARKS
1	K510-021-000-20	HST/NP/24 ASSY	*	1					FIG 150
2	V720-103-503-90	O-RING/P39	*	1					
3	V721-103-103-50	O-RING/G35	*	1					
4	V201-261-014-00	BOLT/M10X140	*	2					
5	V201-261-007-50	BOLT/M10X75	*	2					
6	V401-160-010-00	WASHER,SP/M10	*	4					
7	V522-100-801-80	PIN	*	2					
8	V720-102-401-50	O-RING/P15	*	2					
9	2232-131-001-10	PULLEY/VB133/G	*	1					
10	2151-603-003-00	KEY/05X05X35	*	1					
11	1337-721-002-00	WASHER/11X24X3	*	1					
12	V401-160-010-00	WASHER,SP/M10	*	1					
13	V334-260-010-00	NUT/M10	*	1					
14	2232-131-003-00	BELT/VB049	*	1					
15	1725-210-002-00	FAN/HST	*	1					
16	2232-131-005-00	COLOR/11X14X31	*	2					
17	V201-260-805-00	BOLT/M 8X50	*	2					
18	V401-160-008-00	WASHER,SP/M 8	*	2					
19	V411-260-008-00	WASHER,PL/M 8	*	2					

FIG. 16 HST SYSTEM(D TYPE)

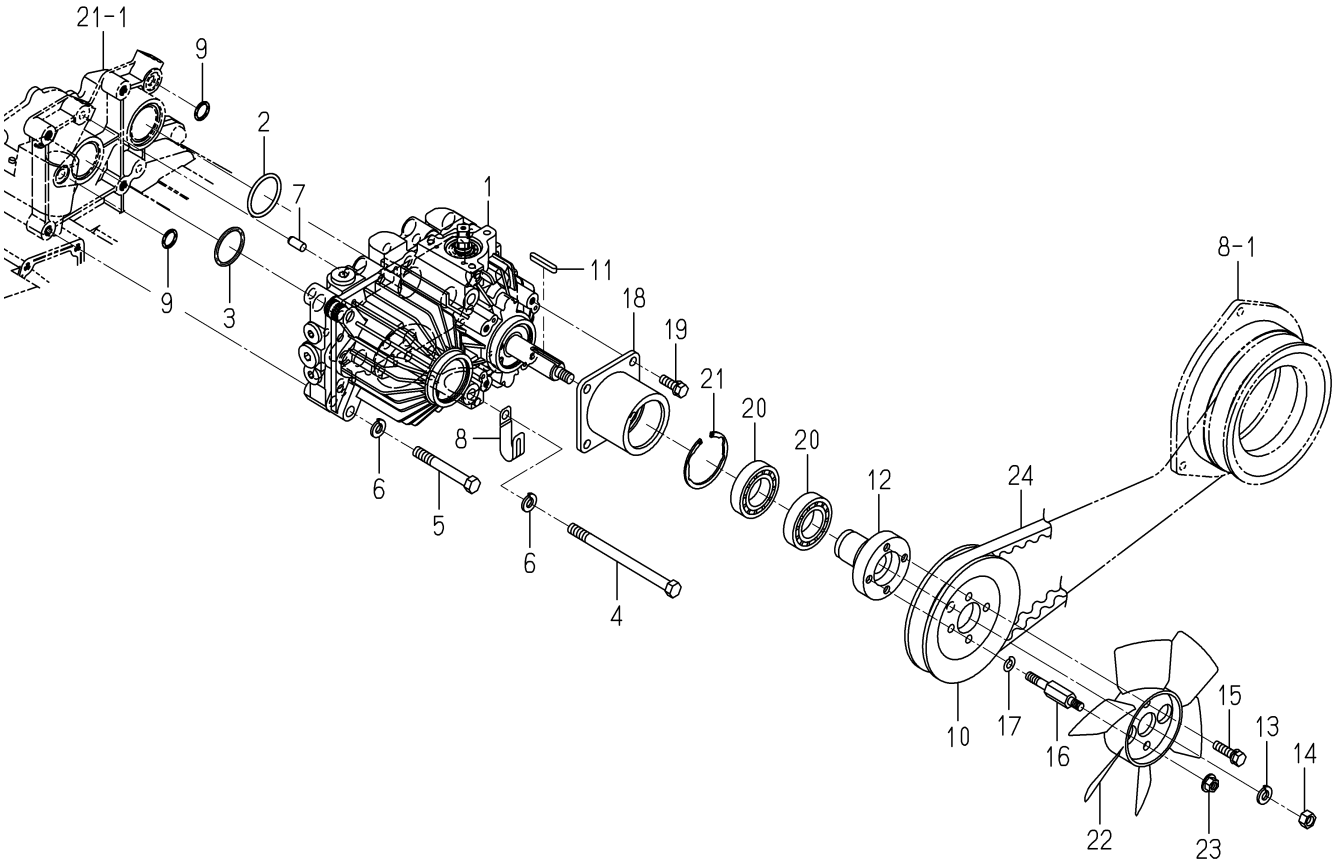

2233-131D-0100

KEY	PART CODE	DESCRIPTION	SPC	TYPE OF MODEL NP60E16		ITC	COL	GRP	REMARKS
1	K510-022-000-00	HST/NP/23 ASSY	*	1					FIG 151
2	V720-103-503-90	O-RING/P39	*	1					
3	V721-103-103-50	O-RING/G35	*	1					
4	V201-261-014-00	BOLT/M10X140	*	2					
5	V201-261-007-50	BOLT/M10X75	*	2					
6	V401-160-010-00	WASHER,SP/M10	*	4					
7	V522-100-801-80	PIN	*	2					
8	3737-172-011-00	CLAMP,HARNESS	*	1					
9	V720-102-401-50	O-RING/P15	*	2					
10	2233-131-002-00	PULLEY/VC125	*	1					
11	2178-631-013-00	KEY/05X05X35	*	1					
12	2233-131-004-00	HUB/PULLEY	*	1					
13	V401-160-010-00	WASHER,SP/M10	*	1					
14	V334-260-010-00	NUT/M10	*	1					
15	V211-260-803-00	BOLT,SEMS	*	2					
16	2233-131-007-00	BOLT/FAN	*	2					
17	V401-160-008-00	WASHER,SP/M 8	*	2					
18	2233-131-200-00	METAL/HST COMP	*	1					
19	V211-260-802-50	BOLT/S	*	4					
20	V600-150-600-60	BEARING,RB/6006SS	*	2					
21	V707-140-055-00	RING,SNAP/R55	*	1					
22	1725-210-002-00	FAN/HST	*	1					
23	V362-260-008-00	NUT/WASHER	*	2					
24	2233-131-006-00	BELT/VC053	*	1					

FIG. 17 LINK(HST)SYSTEM(G TYPE)

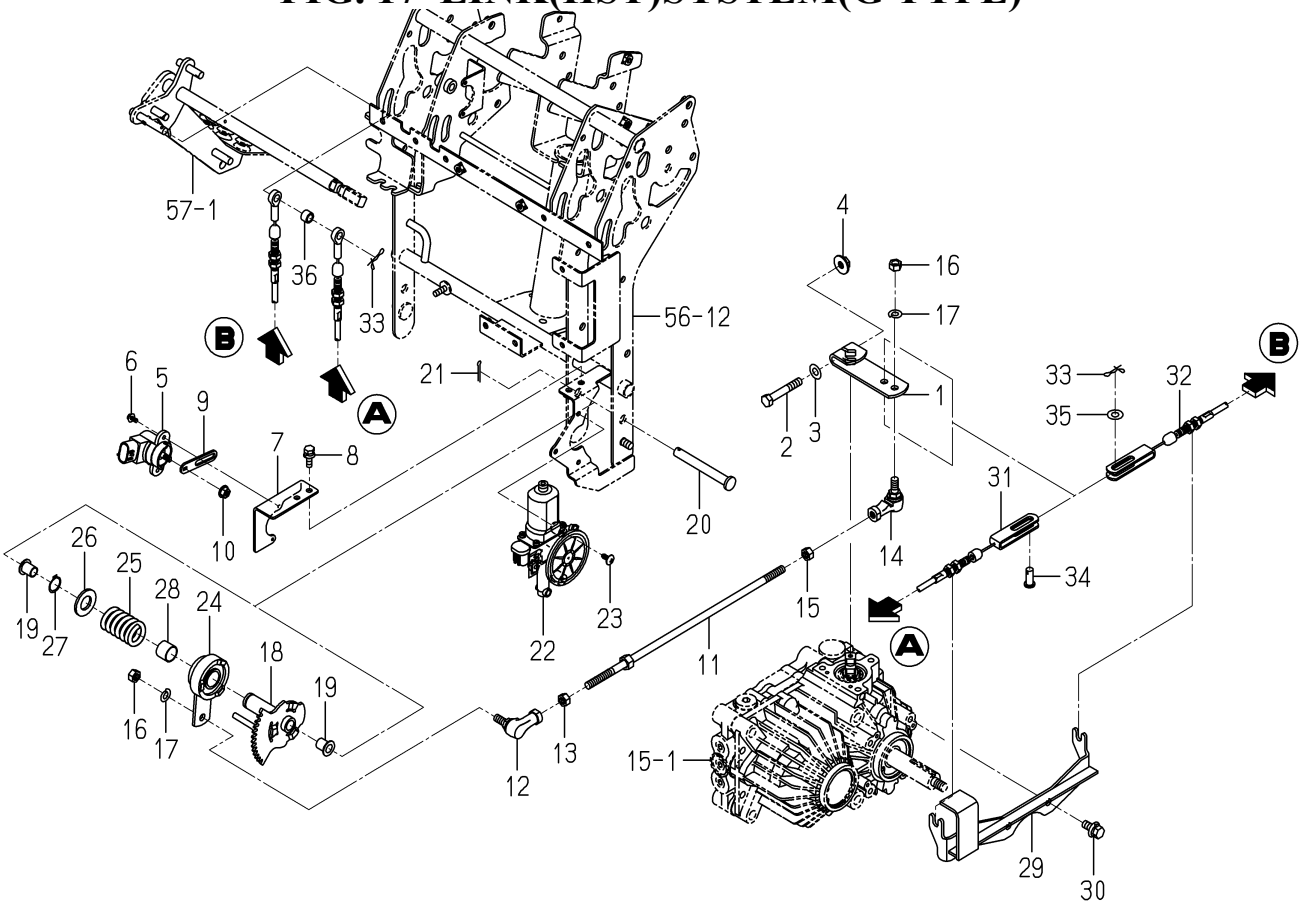

2232-132 -0100

KEY	PART CODE	DESCRIPTION	SPC	TYPE OF MODEL NP60E16		ITC	COL	GRP	REMARKS
1	2232-132-008-00	ARM/TRUNNION/NP	*	1					
2	V201-260-805-00	BOLT/M 8X50	*	1					
3	V411-260-008-00	WASHER,PL/M 8	*	1					
4	V362-260-008-00	NUT/WASHER	*	1					
5	1729-662-330-00	SENSOR/ANGLE/75 ASSY	*	1					
6	V120-364-001-00	SCREW/SP	*	2					
7	2232-132-005-10	PLATE/POTENTIOMETER/	*	1					
8	V210-360-602-00	BOLT/SP	*	2					
9	2232-132-004-00	SENSORARM/HST/NP	*	1					
10	V360-260-006-00	NUT/M6	*	1					
11	2232-132-220-00	ROD/HST/NP COMP	*	1					
12	1560-695-021-00	JOINT BALL M08RH	*	1					
13	V304-260-008-00	NUT	*	1					
14	1560-695-022-00	JOINT BALL M08LH	*	1					
15	1560-132-007-30	NUT/M8	*	1					
16	V304-260-008-00	NUT	*	2					
17	V401-160-008-00	WASHER,SP/M 8	*	2					
18	2232-132-210-10	GEAR/HST/NP COMP	*	1					
19	1110-401-002-00	BUSH/F/10X12X15	*	2					
20	2178-421-003-00	PIN	*	1					
21	V500-163-002-00	PIN,SPLIT/3 X20	*	1					
22	2232-711-270-00	MOTOR/RH ASSY	*	1					
23	3888-726-001-00	TAPPINGSCREW/M5X12	*	3					
24	2232-132-230-00	CLUTCH/HST/NP COMP	*	1					
25	2232-132-001-00	SPRING/HC042	*	1					
26	V411-260-016-00	WASHER / M16	*	1					
27	V704-140-017-00	RING,SNAP/17 C	*	1					
28	2213-701-023-00	BUSH/17X19X15	*	1					
29	2232-132-240-10	PLATE/ADJUSTER/HST	*	1					
30	V211-360-802-00	BOLT/SP	*	2					

FIG. 17 LINK(HST)SYSTEM(G TYPE)

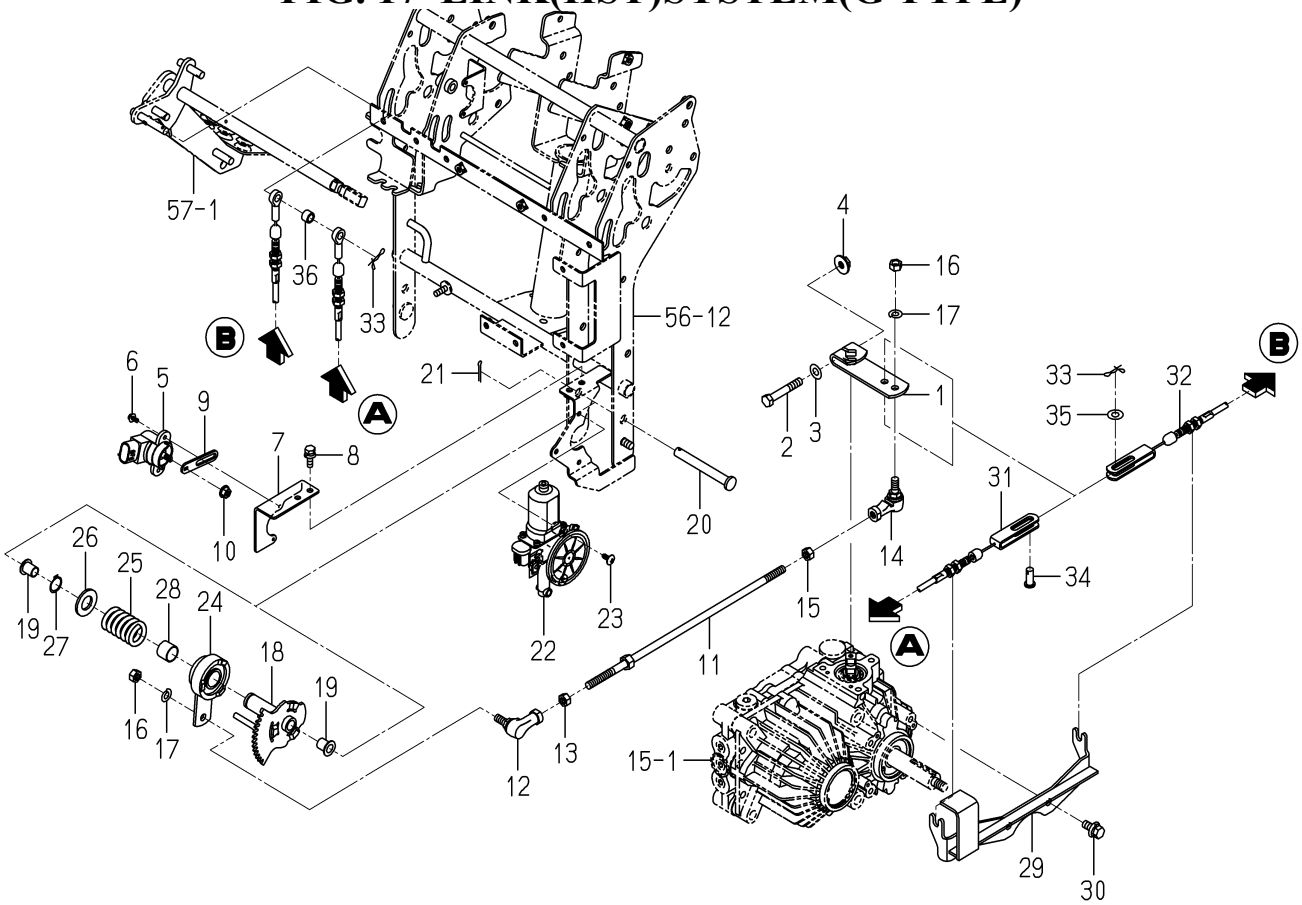

2232-132 -0100

KEY	PART CODE	DESCRIPTION	SPC	TYPE OF MODEL NP60E16		ITC	COL	GRP	REMARKS
31	2232-132-006-20	CABLE/HST/FORWARD	*	1					
32	2232-132-007-20	CABLE/HST/REVERSE	*	1					
33	2161-735-006-00	PIN	*	2					
34	3560-203-002-00	PIN,TRIP-HOOK ROD	*	1					
35	V411-260-008-00	WASHER,PL/M 8	*	1					
36	2232-132-009-00	COLLAR/09X12X09	*	1					

FIG. 18 LINK(HST)SYSTEM(D TYPE)

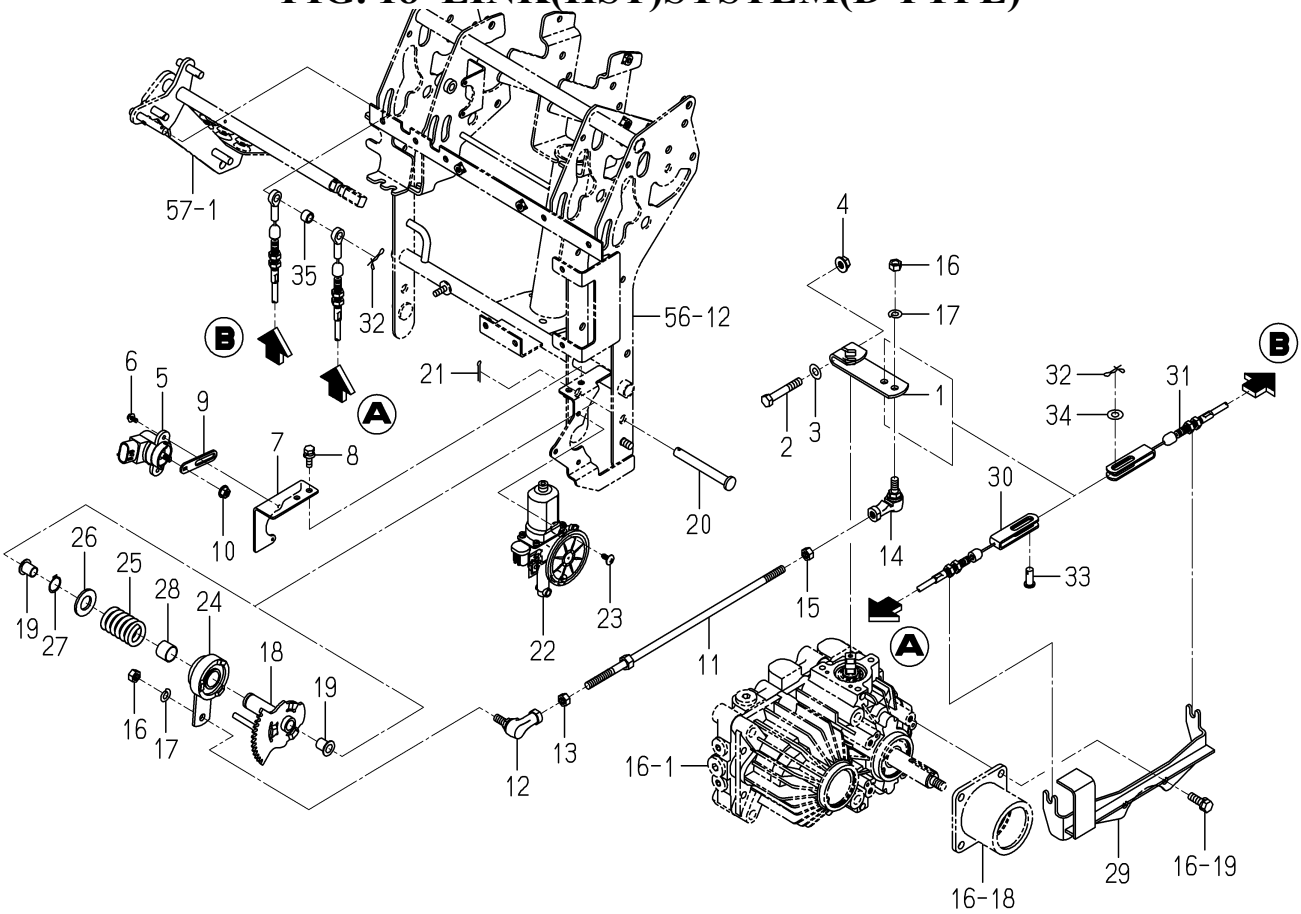

2233-132B-0100

KEY	PART CODE	DESCRIPTION	SPC	TYPE OF MODEL NP60E16		ITC	COL	GRP	REMARKS
1	2232-132-008-00	ARM/TRUNNION/NP	*	1					
2	V201-260-805-00	BOLT/M 8X50	*	1					
3	V411-260-008-00	WASHER,PL/M 8	*	1					
4	V362-260-008-00	NUT/WASHER	*	1					
5	1729-662-330-00	SENSOR/ANGLE/75 ASSY	*	1					
6	V120-364-001-00	SCREW/SP	*	2					
7	2232-132-005-10	PLATE/POTENTIOMETER/	*	1					
8	V210-360-602-00	BOLT/SP	*	2					
9	2232-132-004-00	SENSORARM/HST/NP	*	1					
10	V360-260-006-00	NUT/M6	*	1					
11	2232-132-220-00	ROD/HST/NP COMP	*	1					
12	1560-695-021-00	JOINT BALL M08RH	*	1					
13	V304-260-008-00	NUT	*	1					
14	1560-695-022-00	JOINT BALL M08LH	*	1					
15	1560-132-007-30	NUT/M8	*	1					
16	V304-260-008-00	NUT	*	2					
17	V401-160-008-00	WASHER,SP/M 8	*	2					
18	2232-132-210-10	GEAR/HST/NP COMP	*	1					
19	1110-401-002-00	BUSH/F/10X12X15	*	2					
20	2178-421-003-00	PIN	*	1					
21	V500-163-002-00	PIN,SPLIT/3 X20	*	1					
22	2232-711-270-00	MOTOR/RH ASSY	*	1					
23	3888-726-001-00	TAPPINGSCREW/M5X12	*	3					
24	2232-132-230-00	CLUTCH/HST/NP COMP	*	1					
25	2232-132-001-00	SPRING/HC042	*	1					
26	V411-260-016-00	WASHER / M16	*	1					
27	V704-140-017-00	RING,SNAP/17 C	*	1					
28	2213-701-023-00	BUSH/17X19X15	*	1					
29	2233-132-200-00	PLATE/ADJUSTER/ COMP	*	1					
30	2232-132-006-20	CABLE/HST/FORWARD	*	1					

FIG. 18 LINK(HST)SYSTEM(D TYPE)

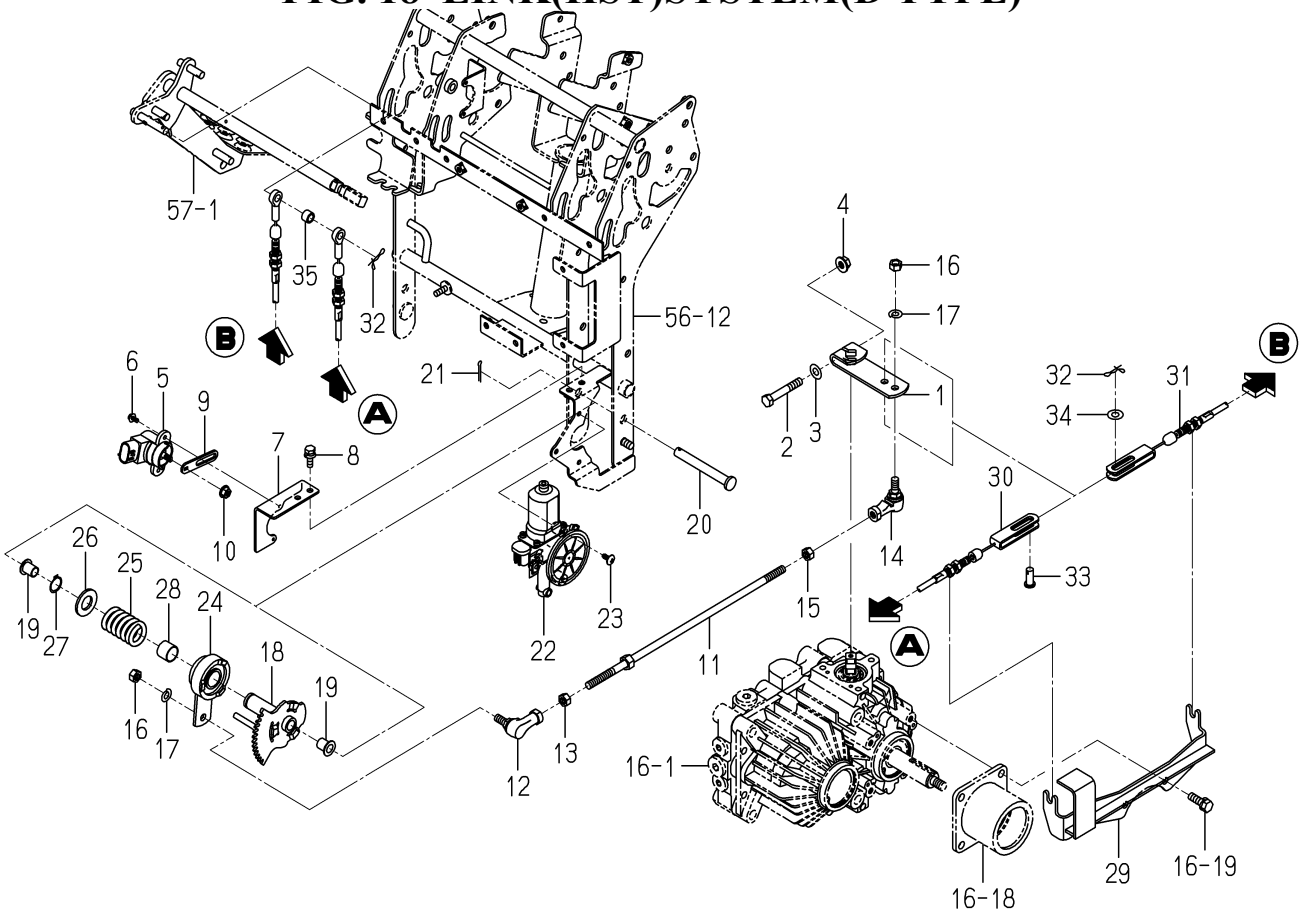

2233-132B-0100

KEY	PART CODE	DESCRIPTION	SPC	TYPE OF MODEL NP60E16		ITC	COL	GRP	REMARKS
31	2232-132-007-20	CABLE/HST/REVERSE	*	1					
32	2161-735-006-00	PIN	*	2					
33	3560-203-002-00	PIN,TRIP-HOOK ROD	*	1					
34	V411-260-008-00	WASHER,PL/M 8	*	1					
35	2232-132-009-00	COLLAR/09X12X09	*	1					

FIG. 19 PEDAL(ACCELERATOR)SYSTEM(G TYPE)

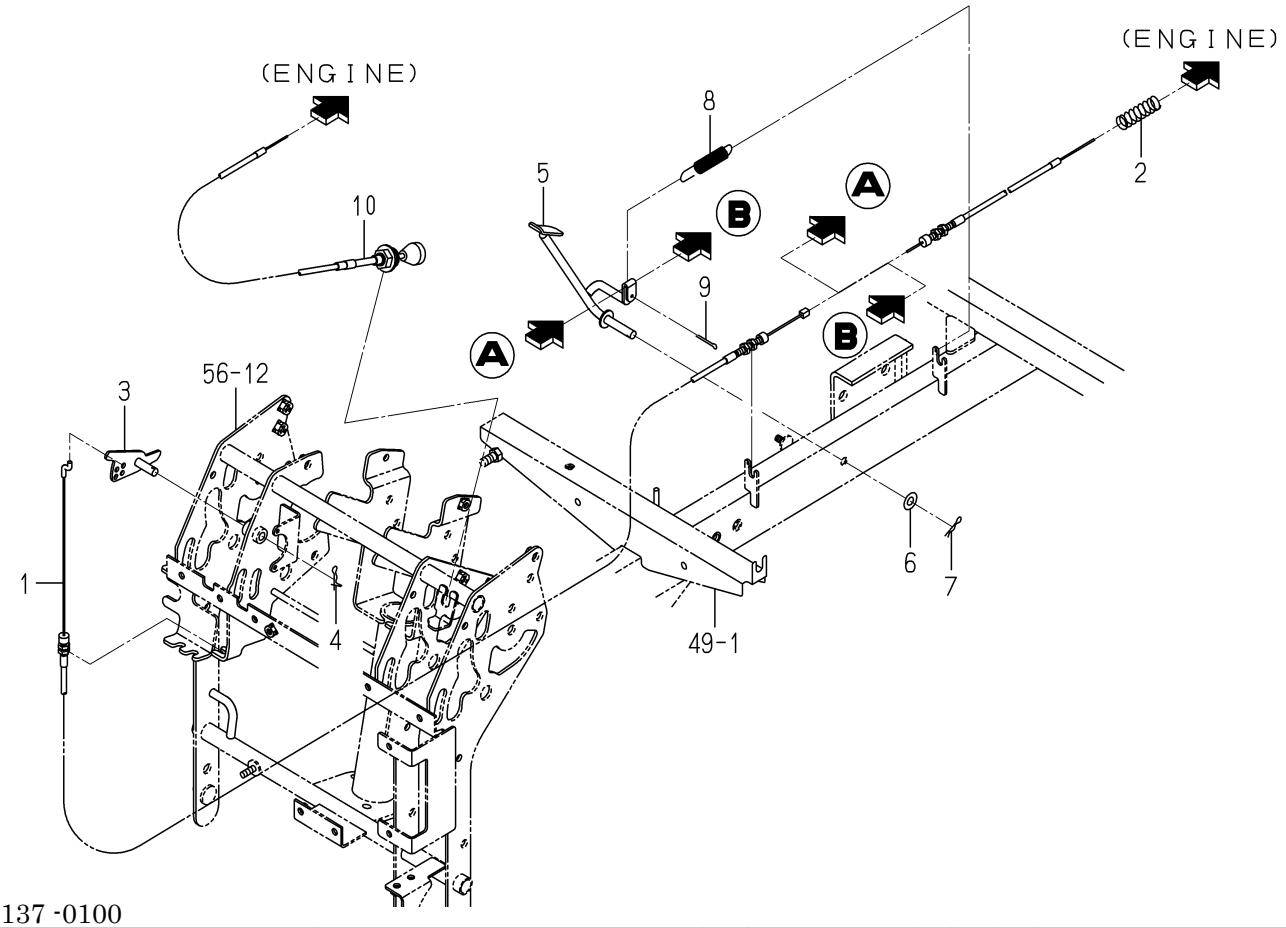

2232-137 -0100

KEY	PART CODE	DESCRIPTION	SPC	TYPE OF MODEL NP60E16		ITC	COL	GRP	REMARKS
1	2232-137-001-10	CABLE/ACCELERATOR/G/	*	1					
2	2171-513-002-00	SPRING/HC050	*	1					
3	2232-137-220-00	ARM/AUTO ACCELERATOR	*	1					
4	2161-735-006-00	PIN	*	1					
5	2232-137-200-10	PEDAL/ACCELERATOR/NP	*	1					
6	V411-260-008-00	WASHER,PL/M 8	*	1					
7	3908-170-020-00	PIN/SNAP/08	*	1					
8	2161-615-014-00	SPRING,HE071	*	1					
9	V500-163-002-00	PIN,SPLIT/3 X20	*	1					
10	2232-137-006-00	CABLE/CHOKE/G/NP	*	1					

FIG. 20 PEDAL(ACCELERATOR)SYSTEM(D TYPE)

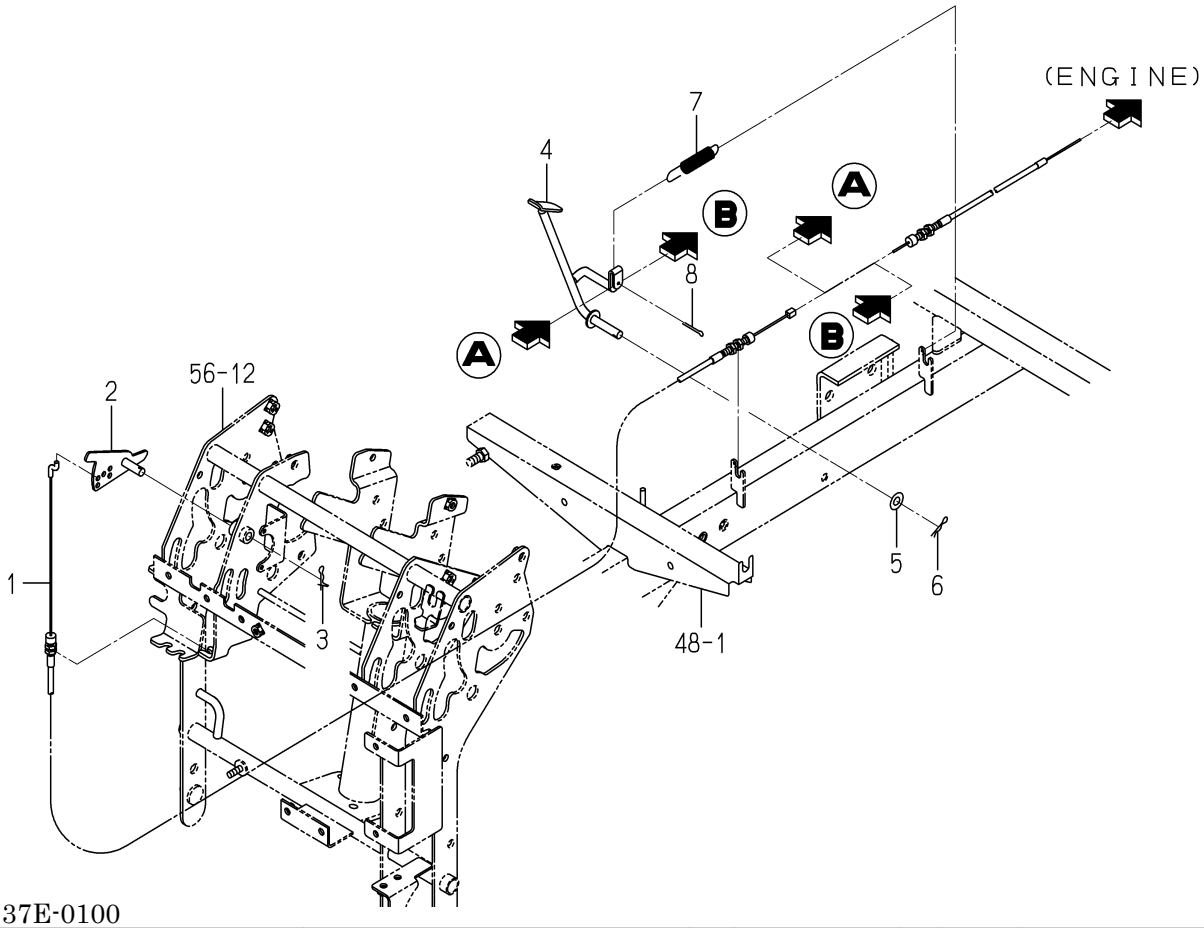

2233-137E-0100

KEY	PART CODE	DESCRIPTION	SPC	TYPE OF MODEL NP60E16		ITC	COL	GRP	REMARKS
1	2233-137-008-00	CABLE/ACCELERATOR/6D	*	1					
2	2233-137-220-00	ARM/AUTO ACCELERATOR	*	1					
3	2161-735-006-00	PIN	*	1					
4	2233-137-200-00	PEDAL/ACCELERATOR/D/	*	1					
5	V411-260-008-00	WASHER,PL/M 8	*	1					
6	3908-170-020-00	PIN/SNAP/08	*	1					
7	2161-615-014-00	SPRING,HE071	*	1					
8	V500-163-002-00	PIN,SPLIT/3 X20	*	1					

FIG. 21 CASE(TRANSMISSION)SYSTEM

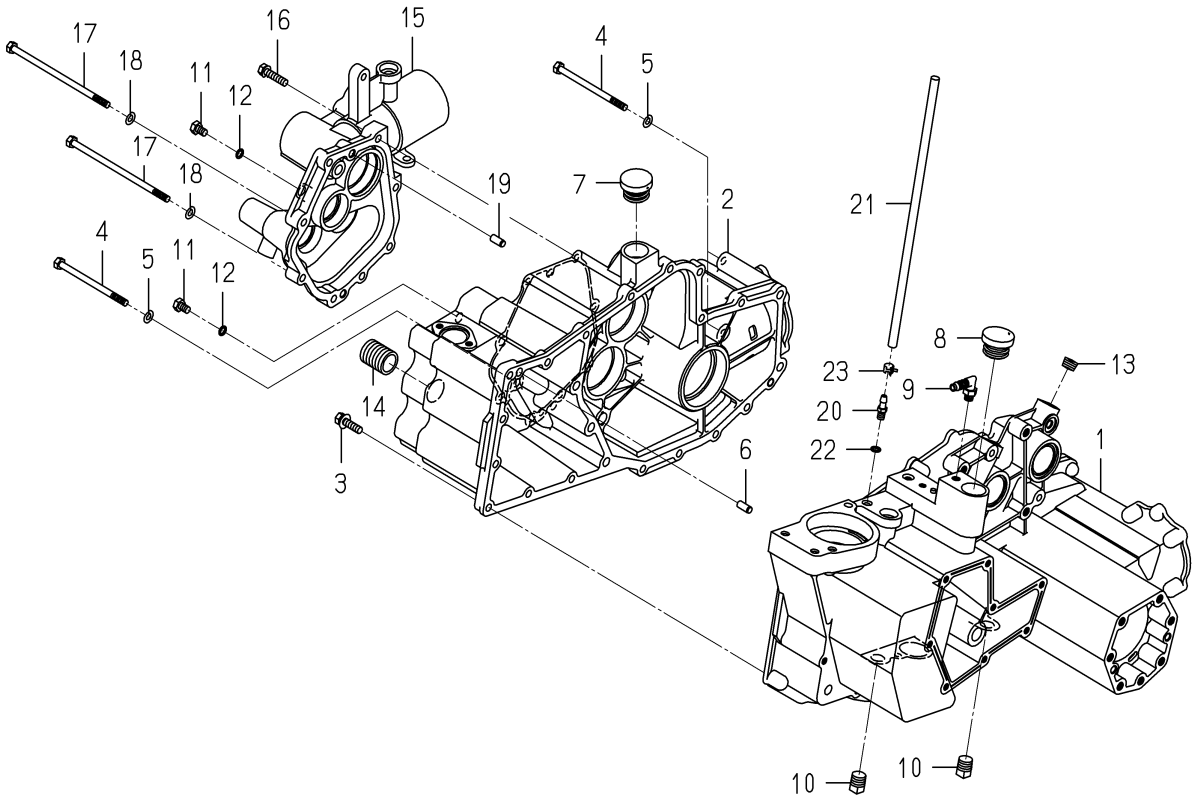

2232-201 -0100

KEY	PART CODE	DESCRIPTION	SPC	TYPE OF MODEL NP60E16		ITC	COL	GRP	REMARKS
1	2232-201-001-40	CASE/TRANSMISSION/LH	*	1					
2	2232-201-002-20	CASE/TRANSMISSION/RH	*	1					
3	V211-560-803-00	BOLT/M8X30	*	17					
4	2232-201-004-00	BOLT/M8X110	*	3					
5	V401-160-008-00	WASHER,SP/M 8	*	3					
6	V522-100-801-80	PIN	*	2					
7	7954-205-101-00	CAP,OIL/30	*	1					
8	2204-201-003-00	CAP/35/YELLOW	*	1					
9	2194-410-006-00	CONNECTOR	*	1					
10	V781-160-000-6B	PLUG/SCREW/SEAL	*	2					
11	2188-201-007-00	BOLT/M8X12	*	2					
12	V720-101-900-80	O-RING/P8	*	2					
13	V780-140-000-6B	PLUG/SCREW/SEAL	*	2					
14	2232-201-006-00	ADAPTERFILTER	*	1					
15	2232-201-003-10	COVER/PLANTINGCLUTCH	*	1					
16	V211-560-803-50	BOLT/S	*	6					
17	2232-201-005-00	BOLT/M8X160	*	2					
18	V401-160-008-00	WASHER,SP/M 8	*	2					
19	V522-100-801-80	PIN	*	2					
20	2232-201-007-10	CONNECTOR/MINIHALF	*	1					
21	2232-201-008-10	HOSE/650	*	1					
22	V720-101-900-80	O-RING/P8	*	1					
23	J062-104-111-00	CLIP/HOSE/10.4-11.1	*	1					

FIG. 22 SHAFT(INPUT)SYSTEM(G TYPE)

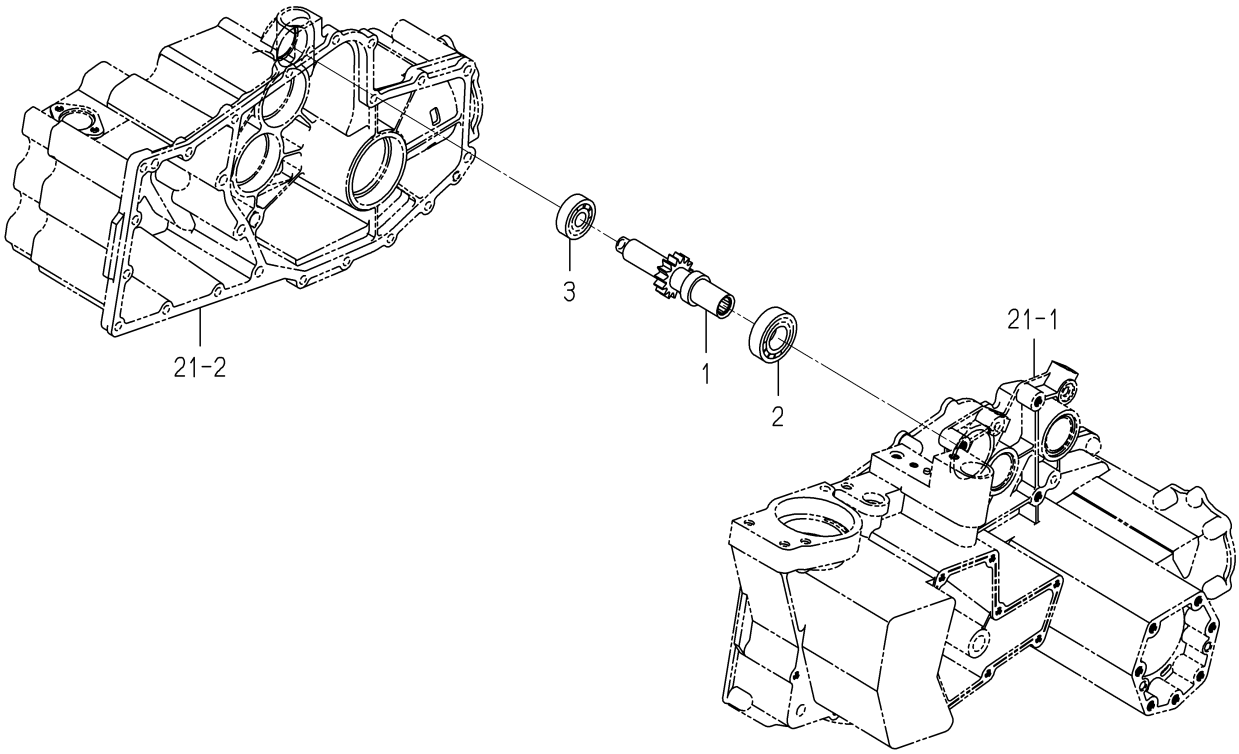

2232-202 -0100

KEY	PART CODE	DESCRIPTION	SPC	TYPE OF MODEL NP60E16		ITC	COL	GRP	REMARKS
1	2232-202-200-10	SHAFT/INPUT COMP	*	1					
2	V600-110-620-50	BEARING,RB/6205	*	1					
3	V600-110-630-20	BEARING,RB/6302	*	1					

FIG. 23 SHAFT(INPUT)SYSTEM(D TYPE)

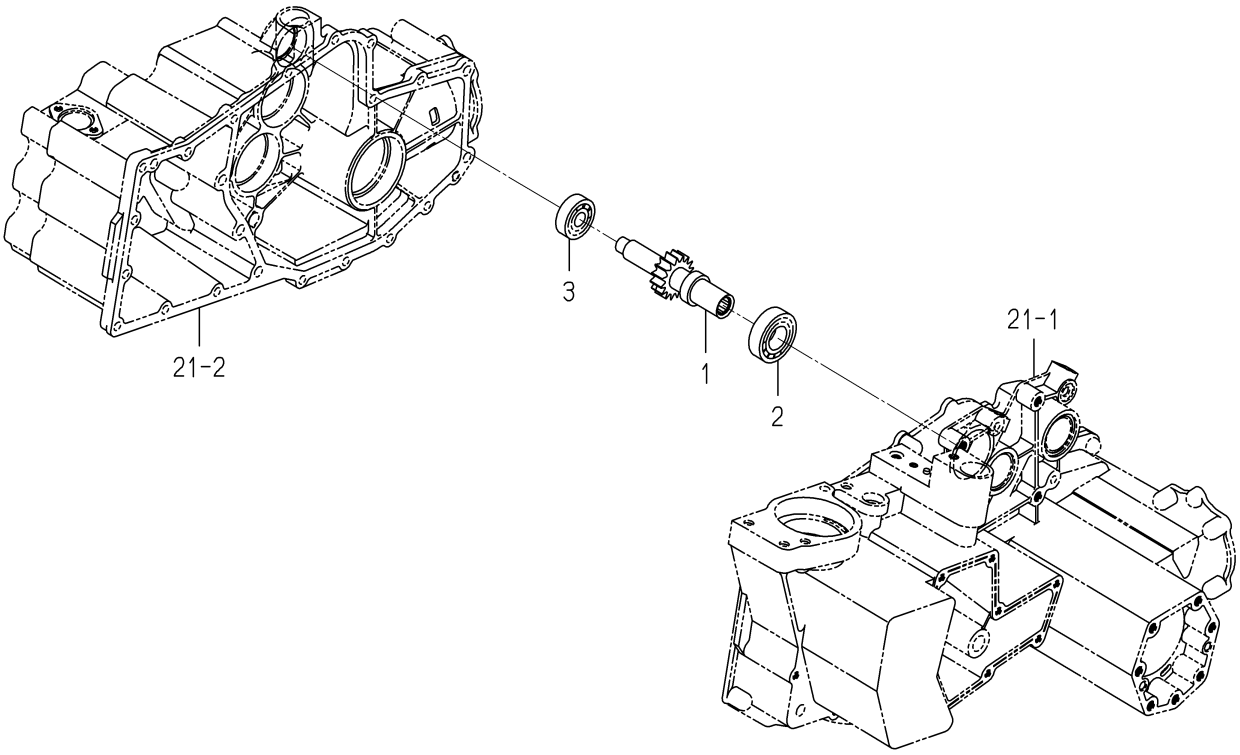

2233-202 -0100

KEY	PART CODE	DESCRIPTION	SPC	TYPE OF MODEL NP60E16		ITC	COL	GRP	REMARKS
1	2233-202-200-00	SHAFT/INPUT/8D COMP	*	1					
2	V600-110-620-50	BEARING,RB/6205	*	1					
3	V600-110-630-20	BEARING,RB/6302	*	1					

FIG. 24 SHAFT(COUNTER)SYSTEM(G TYPE)

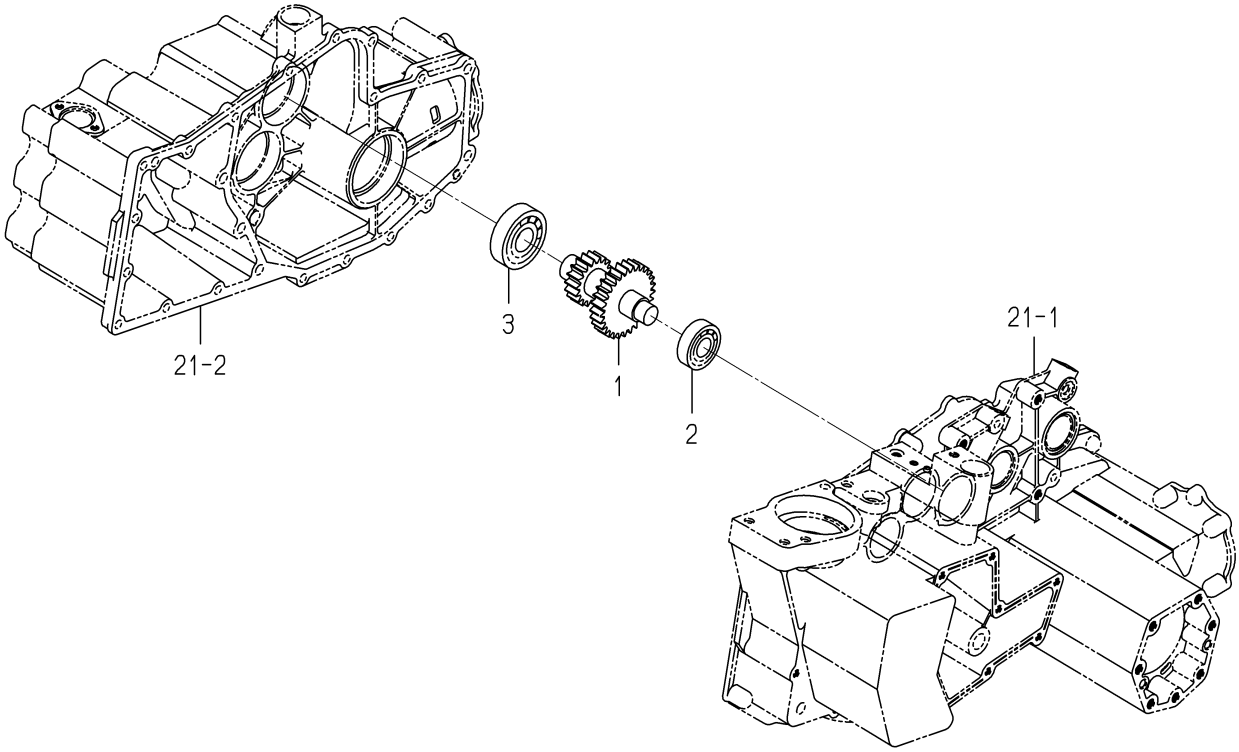

2232-203 -0100

KEY	PART CODE	DESCRIPTION	SPC	TYPE OF MODEL NP60E16		ITC	COL	GRP	REMARKS
1	2232-203-200-10	SHAFT/COUNTER COMP	*	1					
2	V600-110-620-40	BEARING,RB/6204	*	1					
3	V600-110-630-50	BEARING,RB/6305	*	1					

FIG. 25 SHAFT(COUNTER)SYSTEM(D TYPE)

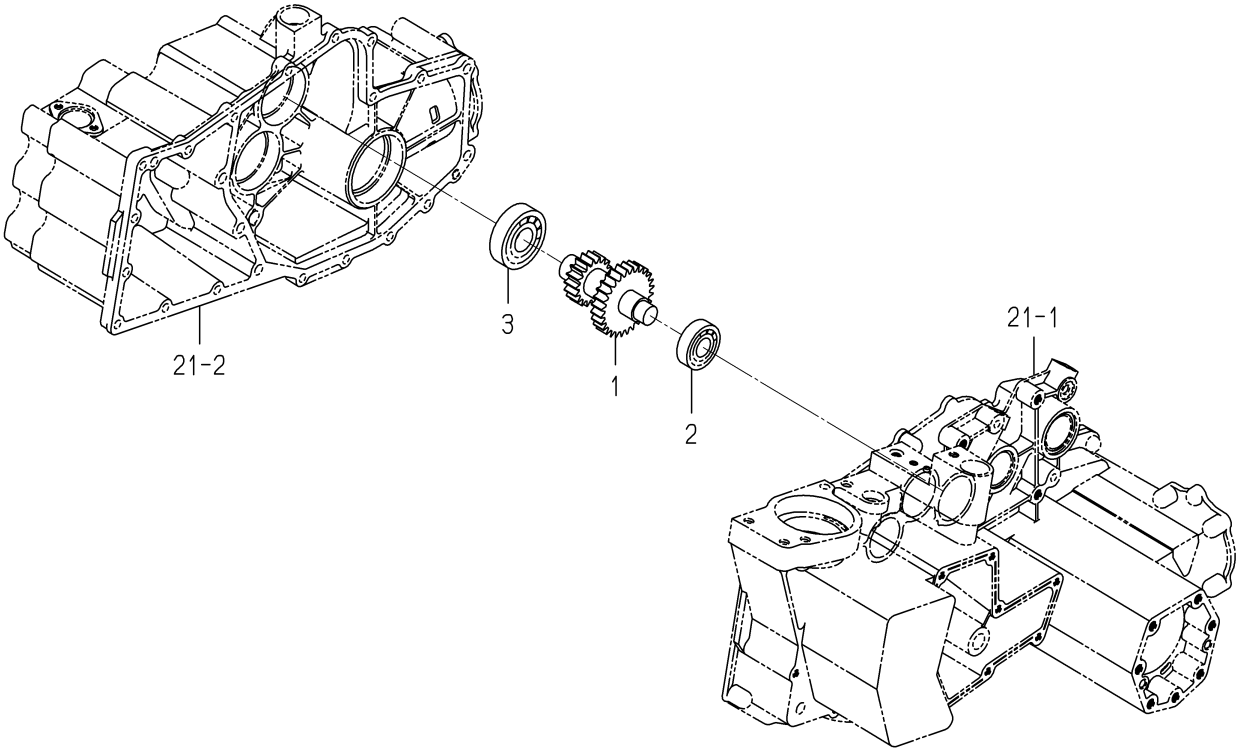

2233-203 -0100

KEY	PART CODE	DESCRIPTION	SPC	TYPE OF MODEL NP60E16		ITC	COL	GRP	REMARKS
1	2233-203-200-00	SHAFT/COUNTER/8 COMP	*	1					
2	V600-110-620-40	BEARING,RB/6204	*	1					
3	V600-110-630-50	BEARING,RB/6305	*	1					

FIG. 26 SHAFT(CHANGE)SYSTEM(G TYPE)

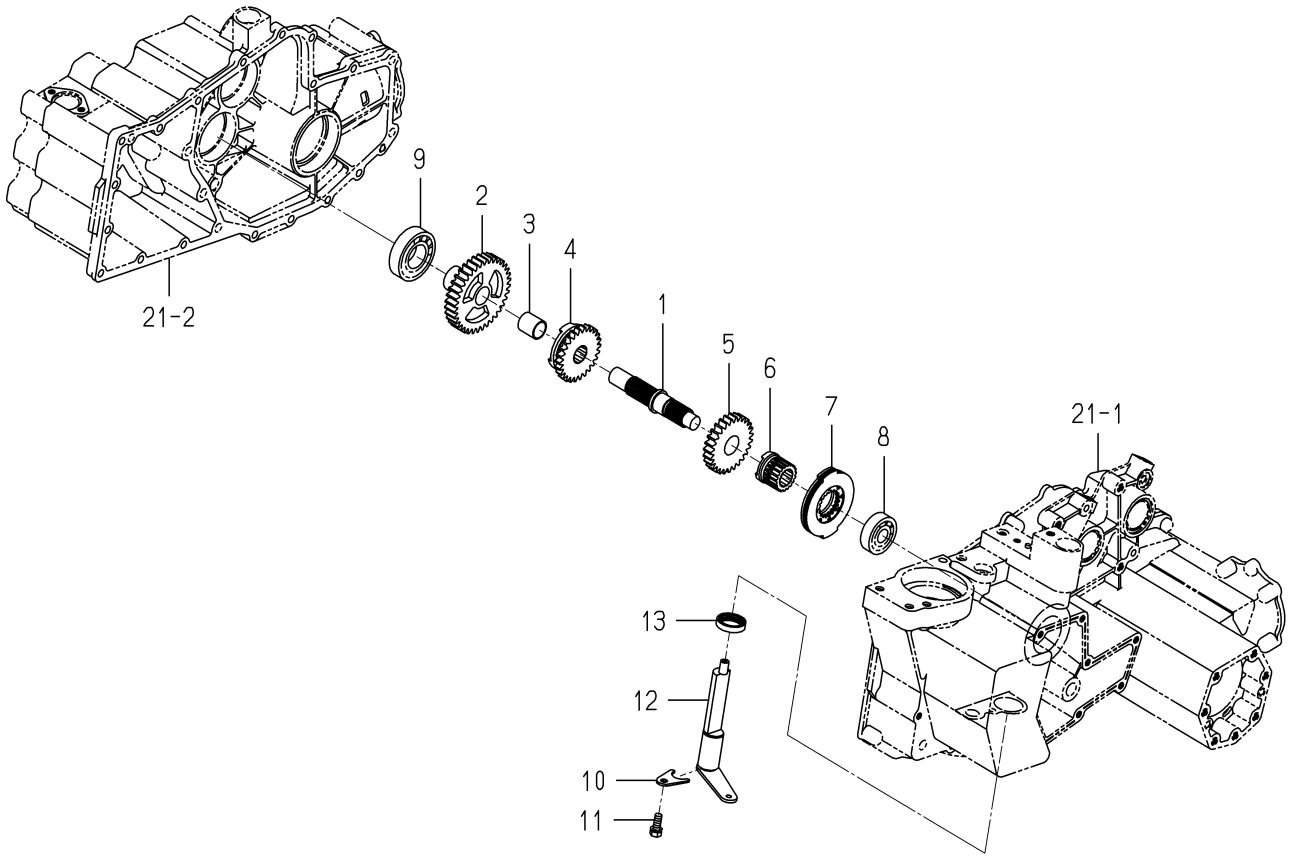

2232-204 -0100

KEY	PART CODE	DESCRIPTION	SPC	TYPE OF MODEL NP60E16		ITC	COL	GRP	REMARKS
1	2232-204-001-20	SHAFT/CHANGE	*	1					
2	2232-204-002-30	GEAR/SPUR/36	*	1					
3	8664-305-201-00	BUSH/20X23X25	*	1					
4	2232-204-004-00	GEAR/SPUR/26	*	1					
5	2232-204-005-00	GEAR/SPUR/26	*	1					
6	2232-204-006-00	HAB/BRAKE	*	1					
7	2213-204-200-00	BRAKE/8 ASSY	*	1					
8	V600-110-630-30	BEARING,RB/6303	*	1					
9	V600-110-620-60	BEARING,RB/6206	*	1					
10	2232-204-008-00	PLATE/FOUR BRAKE HOL	*	1					
11	2144-701-021-00	BOLT	*	1					
12	2232-204-210-00	SHAFT/FOUR WHEEL BRA	*	1					
13	V744-125-350-70	SEAL,OIL/TC25357	*	1					

FIG. 27 SHAFT(CHANGE)SYSTEM(D TYPE)

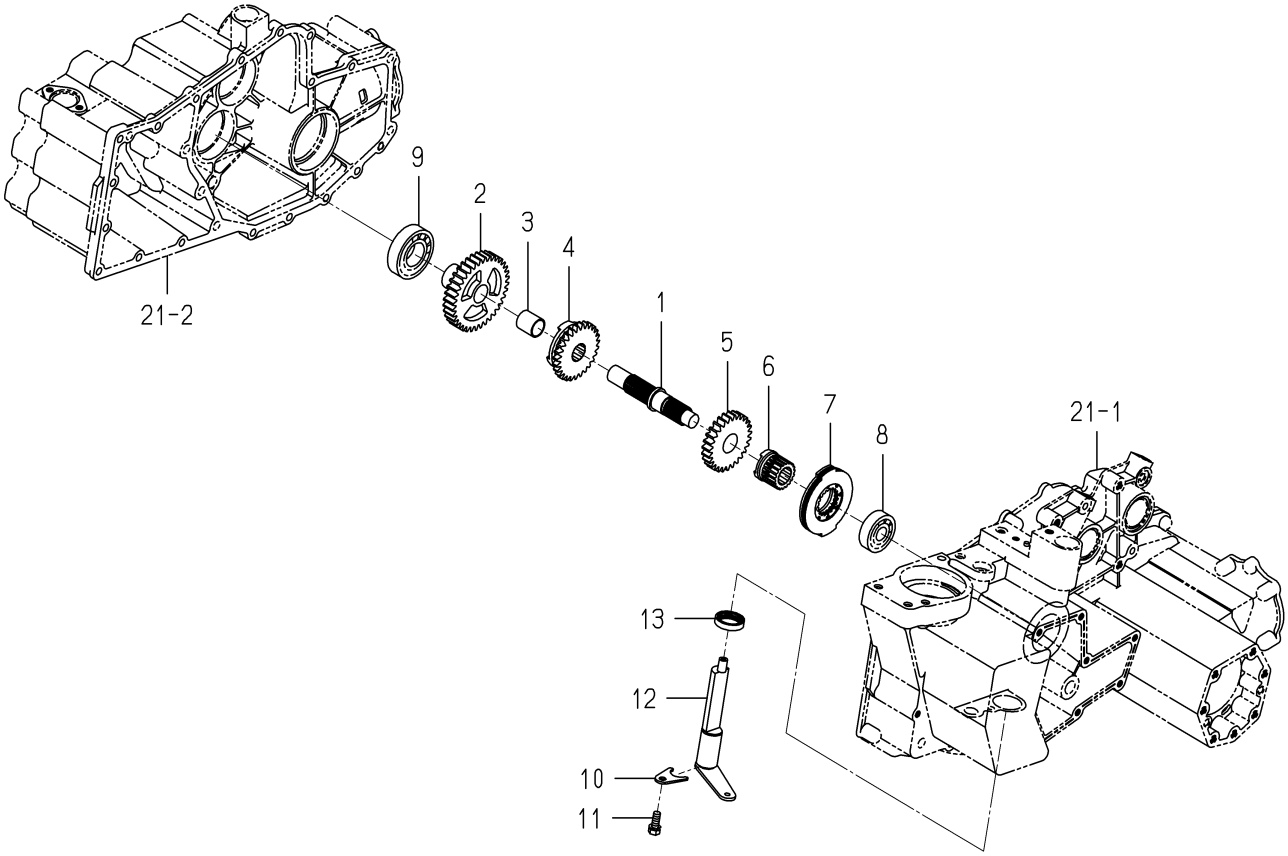

2233-204 -0100

KEY	PART CODE	DESCRIPTION	SPC	TYPE OF MODEL NP60E16		ITC	COL	GRP	REMARKS
1	2232-204-001-20	SHAFT/CHANGE	*	1					
2	2232-204-002-30	GEAR/SPUR/36	*	1					
3	8664-305-201-00	BUSH/20X23X25	*	1					
4	2233-204-001-00	GEAR/SPUR/27	*	1					
5	2232-204-005-00	GEAR/SPUR/26	*	1					
6	2232-204-006-00	HAB/BRAKE	*	1					
7	2213-204-200-00	BRAKE/8 ASSY	*	1					
8	V600-110-630-30	BEARING,RB/6303	*	1					
9	V600-110-620-60	BEARING,RB/6206	*	1					
10	2232-204-008-00	PLATE/FOUR BRAKE HOL	*	1					
11	2144-701-021-00	BOLT	*	1					
12	2232-204-210-00	SHAFT/FOUR WHEEL BRA	*	1					
13	V744-125-350-70	SEAL,OIL/TC25357	*	1					

FIG. 28 SHAFT(OUTPUT)SYSTEM(G TYPE)

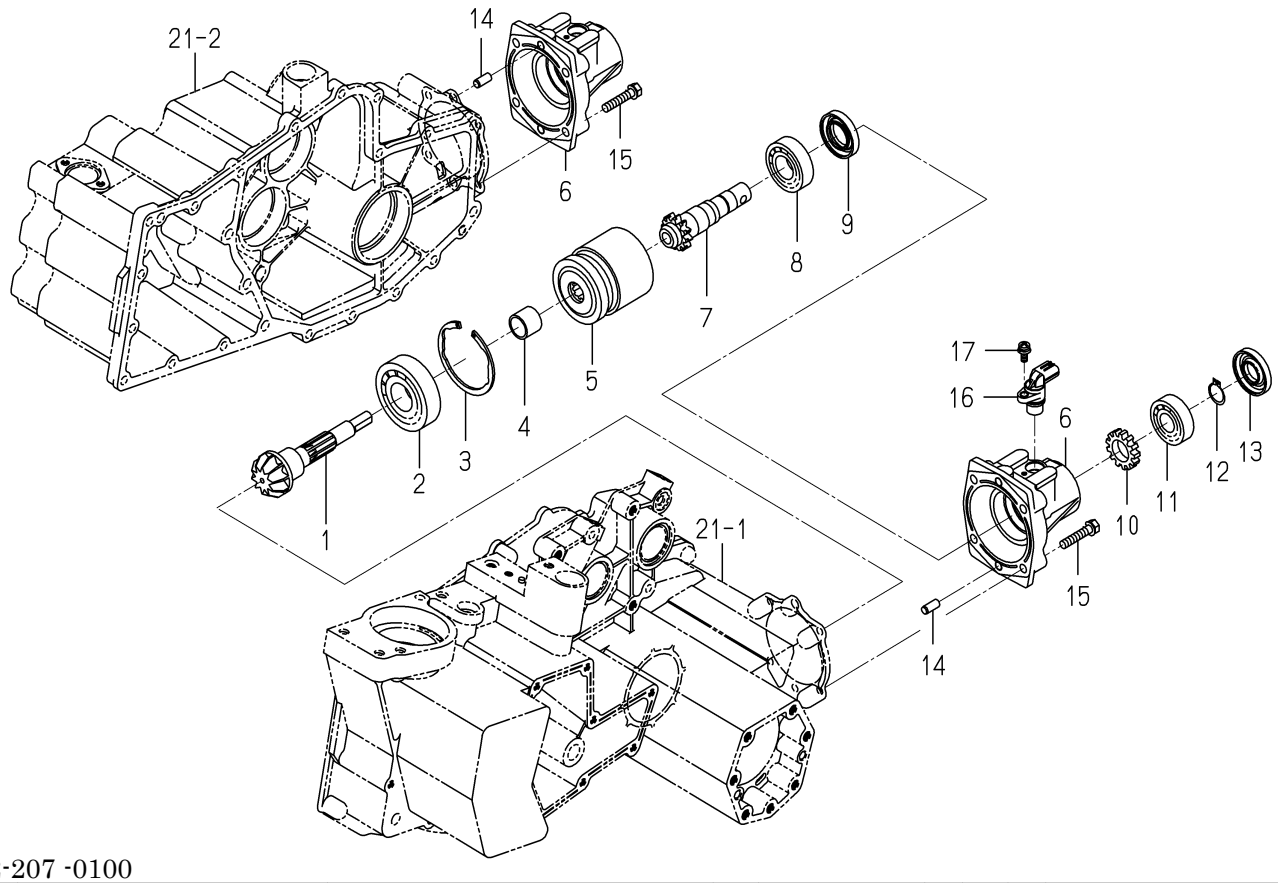

2232-207 -0100

KEY	PART CODE	DESCRIPTION	SPC	TYPE OF MODEL NP60E16		ITC	COL	GRP	REMARKS
1	2232-207-001-00	GEAR/BEVEL/10	*	2					
2	V600-110-630-60	BEARING,RB/6306	*	2					
3	V707-140-072-00	RING,SNAP/R72	*	2					
4	2232-207-004-00	COLLAR/20X25X21	*	2					
5	2232-207-200-00	CLUTCH/NP ASSY	*	2					
6	2204-207-001-10	COVER/CLUTCH	*	2					
7	2232-207-002-20	SHAFT/REARCLUTCH/N	*	2					
8	V600-110-620-50	BEARING,RB/6205	*	2					
9	V744-125-470-80	SEAL,OIL/TC25478	*	2					
10	2204-207-012-30	GEAR/TURN	*	2					
11	V600-110-620-40	BEARING,RB/6204	*	2					
12	V704-140-020-00	RING,SNAP/20 C	*	2					
13	V744-120-470-70	SEAL,OIL/TC20477	*	2					
14	V522-100-801-80	PIN	*	4					
15	V211-260-804-00	BOLT,SEMS	*	8					
16	3888-281-200-00	SENSOR/SPEED/GEAR	*	2					
17	V120-265-001-60	SCREW SENS/M5X16	*	2					

FIG. 29 SHAFT(OUTPUT)SYSTEM(D TYPE)

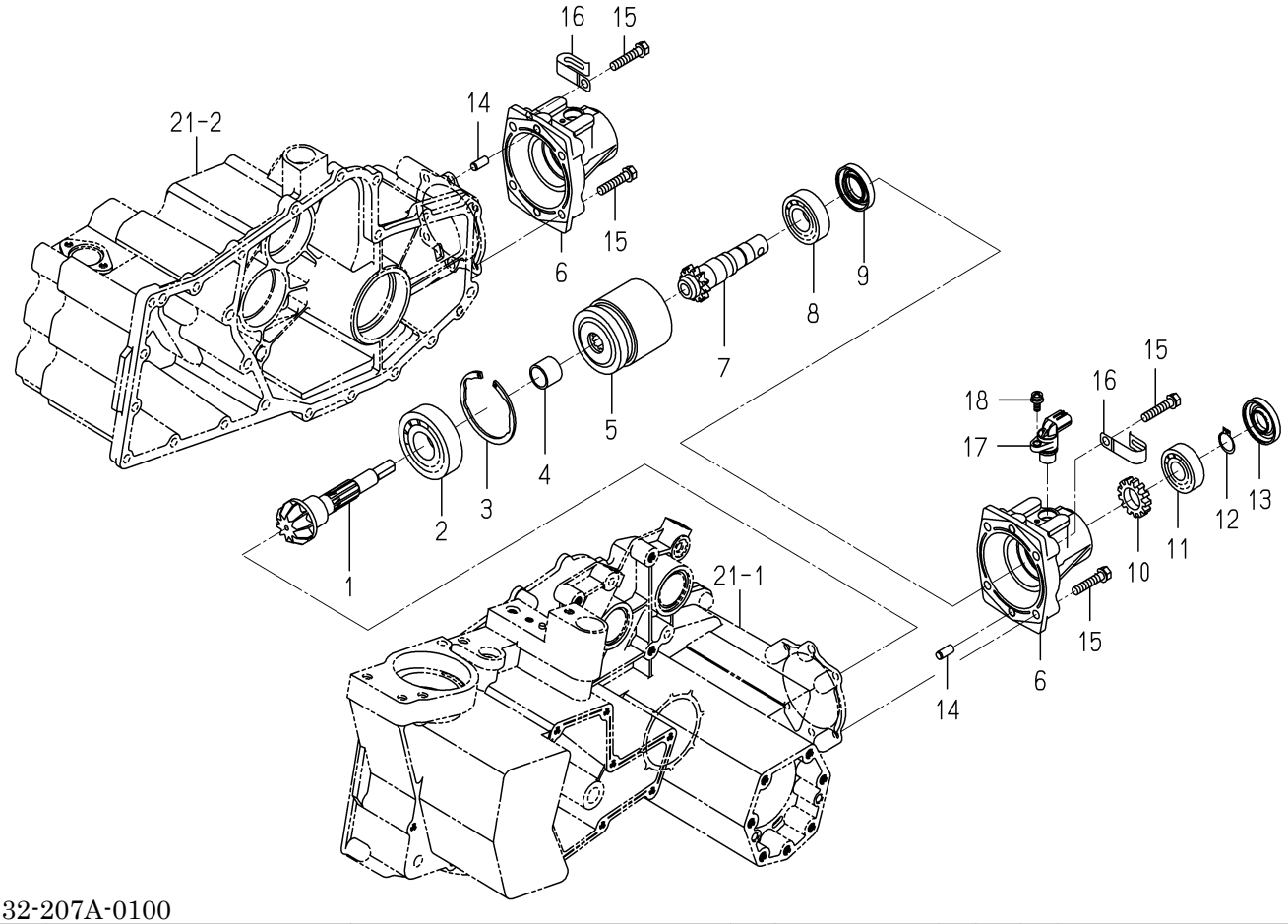

2232-207A-0100

KEY	PART CODE	DESCRIPTION	SPC	TYPE OF MODEL NP60E16		ITC	COL	GRP	REMARKS
1	2232-207-001-00	GEAR/BEVEL/10	*	2					
2	V600-110-630-60	BEARING,RB/6306	*	2					
3	V707-140-072-00	RING,SNAP/R72	*	2					
4	2232-207-004-00	COLLAR/20X25X21	*	2					
5	2233-207-250-00	CLUTCH/NP8 ASSY	*	2					
6	2204-207-001-10	COVER/CLUTCH	*	2					
7	2232-207-002-20	SHAFT/REARCLUTCH/N	*	2					
8	V600-110-620-50	BEARING,RB/6205	*	2					
9	V744-125-470-80	SEAL,OIL/TC25478	*	2					
10	2204-207-012-30	GEAR/TURN	*	2					
11	V600-110-620-40	BEARING,RB/6204	*	2					
12	V704-140-020-00	RING,SNAP/20 C	*	2					
13	V744-120-470-70	SEAL,OIL/TC20477	*	2					
14	V522-100-801-80	PIN	*	4					
15	V211-260-804-00	BOLT,SEMS	*	8					
16	1425-621-004-00	HOLDER/JE/9-9	*	2					
17	3888-281-200-00	SENSOR/SPEED/GEAR	*	2					
18	V120-265-001-60	SCREW SENS/M5X16	*	2					

FIG. 30 SHAFT(DRIVE/FRONT)SYSTEM

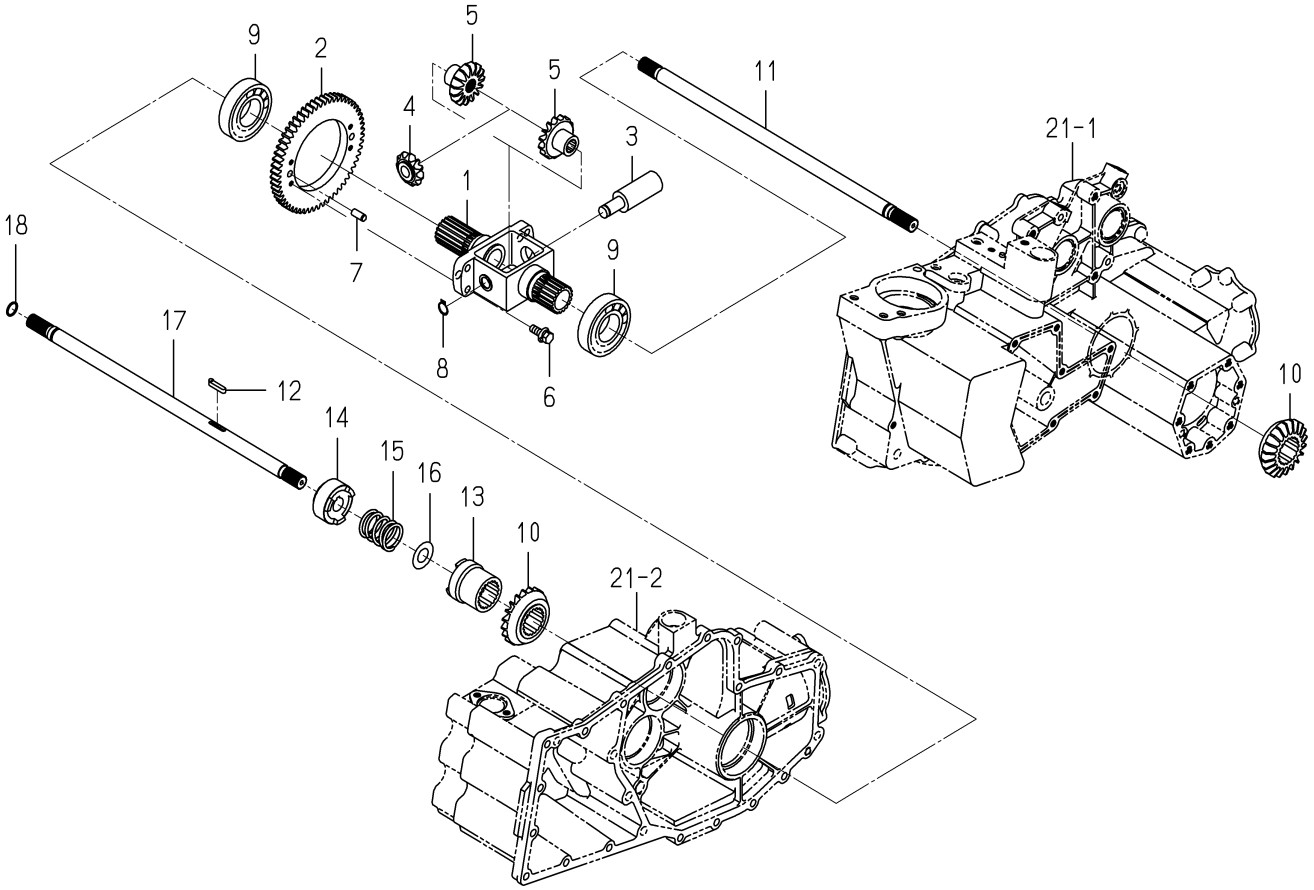

2232-208 -0100

KEY	PART CODE	DESCRIPTION	SPC	TYPE OF MODEL NP60E16		ITC	COL	GRP	REMARKS
1	2232-208-001-20	FRONT/DIFFCASE	*	1					
2	2232-208-009-10	GEAR/SUPER/58	*	1					
3	2232-208-011-00	SHAFT/DIFF	*	1					
4	2204-208-007-20	GEAR/BEVEL/11	*	1					
5	2204-208-002-10	GEAR/BEVEL/15	*	2					
6	V211-560-802-50	BOLT,SEMS/M8X25 7T	*	4					
7	V522-100-801-80	PIN	*	2					
8	V704-140-014-00	RING,SNAP/14 C	*	1					
9	V600-110-620-70	BEARING,RB/6207	*	2					
10	2232-208-006-00	GEAR/BEVEL/20	*	2					
11	2232-208-007-00	SHAFT/FRONTDRIVE/LH	*	1					
12	2204-208-018-00	KEY/05X05X26	*	1					
13	2232-208-005-10	HUB/DIFF/DRIVE	*	1					
14	2232-208-003-00	CLUTCH/DIFFLOCK	*	1					
15	2232-208-002-00	SPRING/HC041	*	1					
16	2232-208-004-00	WASHER/18X34X02	*	1					
17	2232-208-008-00	SHAFT/FRONTDRIVE/RH	*	1					
18	V723-101-501-50	RING/O	*	2					

FIG. 31 SHAFT(DRIVE/PLANTING)SYSTEM(G TYPE)

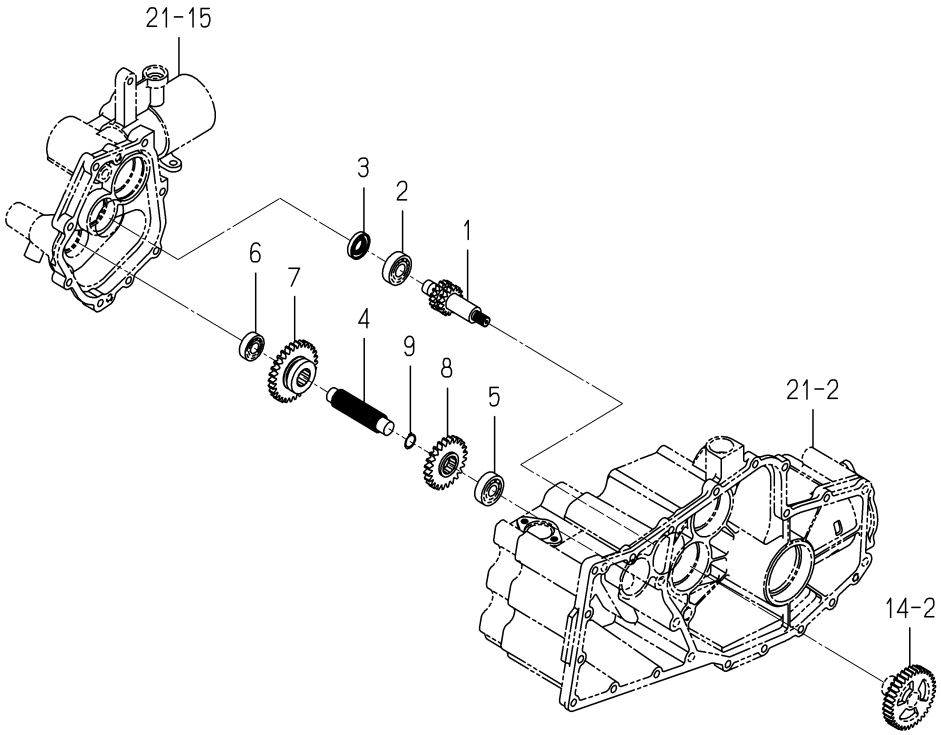

2232-209 -0100

KEY	PART CODE	DESCRIPTION	SPC	TYPE OF MODEL NP60E16		ITC	COL	GRP	REMARKS
1	2232-209-007-00	GEAR/SPUR/15-17	*	1					
2	V600-110-620-40	BEARING,RB/6204	*	1					
3	V744-120-400-70	SEAL,OIL/TC20407	*	1					
4	2232-209-001-10	SHAFT/CHANGE/SUB	*	1					
5	V600-110-630-30	BEARING,RB/6303	*	1					
6	V600-110-620-30	BEARING,RB/6203	*	1					
7	2232-209-005-00	GEAR/SPUR/30	*	1					
8	2232-209-006-00	GEAR/SPUR/24	*	1					
9	V704-140-022-00	RING,SNAP/22 C	*	1					

FIG. 32 SHAFT(DRIVE/PLANTING)SYSTEM(D TYPE)

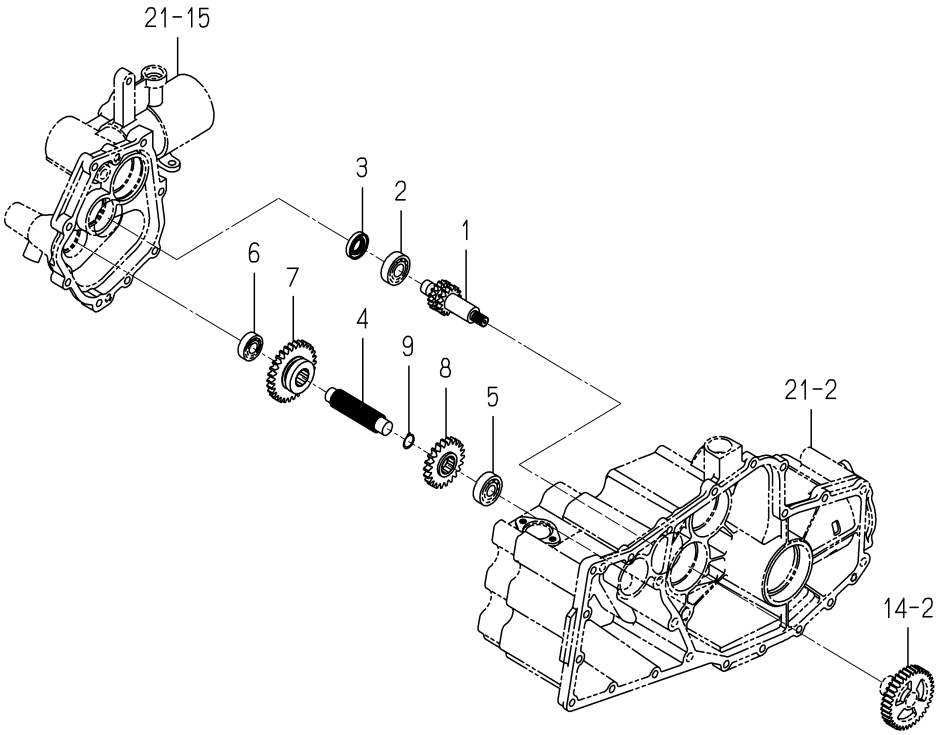

2233-209 -0100

KEY	PART CODE	DESCRIPTION	SPC	TYPE OF MODEL NP60E16		ITC	COL	GRP	REMARKS
1	2232-209-007-00	GEAR/SPUR/15-17	*	1					
2	V600-110-620-40	BEARING,RB/6204	*	1					
3	V744-120-400-70	SEAL,OIL/TC20407	*	1					
4	2232-209-001-10	SHAFT/CHANGE/SUB	*	1					
5	V600-110-630-30	BEARING,RB/6303	*	1					
6	V600-110-620-30	BEARING,RB/6203	*	1					
7	2232-209-005-00	GEAR/SPUR/30	*	1					
8	2233-209-001-00	GEAR/SPUR/22	*	1					
9	V704-140-022-00	RING,SNAP/22 C	*	1					

FIG. 33 SHAFT (PLANTING INTERVAL/OUT)SYSTEM(G TYPE)

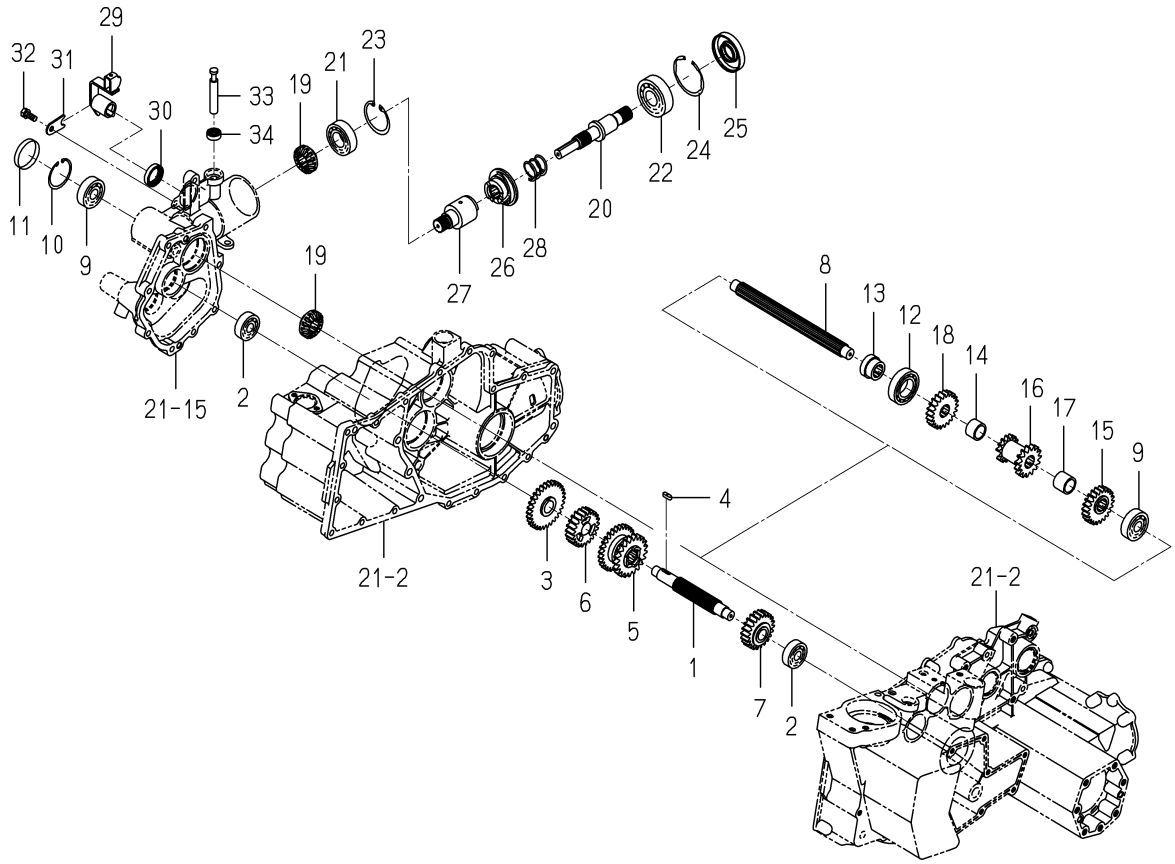

2232-211 -0100

KEY	PART CODE	DESCRIPTION	SPC	TYPE OF MODEL NP60E16		ITC	COL	GRP	REMARKS
1	2232-211-001-10	SHAFT/CHANGE	*	1					
2	V600-110-630-20	BEARING,RB/6302	*	2					
3	2232-211-210-00	GEAR/SPUR/30 COMP	*	1					
4	2232-211-037-00	KEY/05X05X17	*	1					
5	2232-211-003-00	GEAR/SPUR/21-28	*	1					
6	2232-211-004-00	GEAR/SPARSE PLANTING	*	1					
7	2232-211-005-00	GEAR/SPARSE PLANTING	*	1					
8	2232-211-006-20	SHAFT/DRIVEN	*	1					
9	V600-110-630-30	BEARING,RB/6303	*	2					
10	V705-140-047-00	RING,SNAP/47 C	*	1					
11	2194-701-010-00	PLUG/47	*	1					
12	V600-110-600-60	BEARING,RB 6006	*	1					
13	2232-211-035-00	HUB/PLANTING/DRIVEN	*	1					
14	2232-211-033-10	COLOR/21X27X18	*	2					
15	2232-211-018-00	GEAR/SPARSE PLANTING	*	1					
16	2232-211-007-00	GEAR/SPUR/15-15	*	1					
17	2232-211-034-00	COLOR/21X27X23	*	1					
18	2232-211-017-00	GEAR/SPARSE PLANTING	*	1					
19	2232-211-024-00	GEAR/BEVEL/15/NP	*	2					
20	2232-211-015-10	SHAFT/PLANT/OUT	*	1					
21	V600-110-620-50	BEARING,RB/6205	*	1					
22	V600-110-630-50	BEARING,RB/6305	*	1					
23	V705-140-052-00	RING,SNAP/52 C	*	1					
24	V707-140-062-00	RING,SNAP/R62	*	1					
25	8595-201-025-00	SEAL/OIL	*	1					
26	2232-211-013-00	CLUTCH/PLANTING	*	1					
27	2232-211-014-10	CLUCH/PLANTER/DRIVE	*	1					
28	2180-203-002-00	SPRING/HC028	*	1					
29	2232-211-200-10	SHIFTER/CLUTCH/REVER	*	1					
30	V744-125-350-70	SEAL,OIL/TC25357	*	1					

FIG. 33 SHAFT (PLANTING INTERVAL/OUT)SYSTEM(G TYPE)

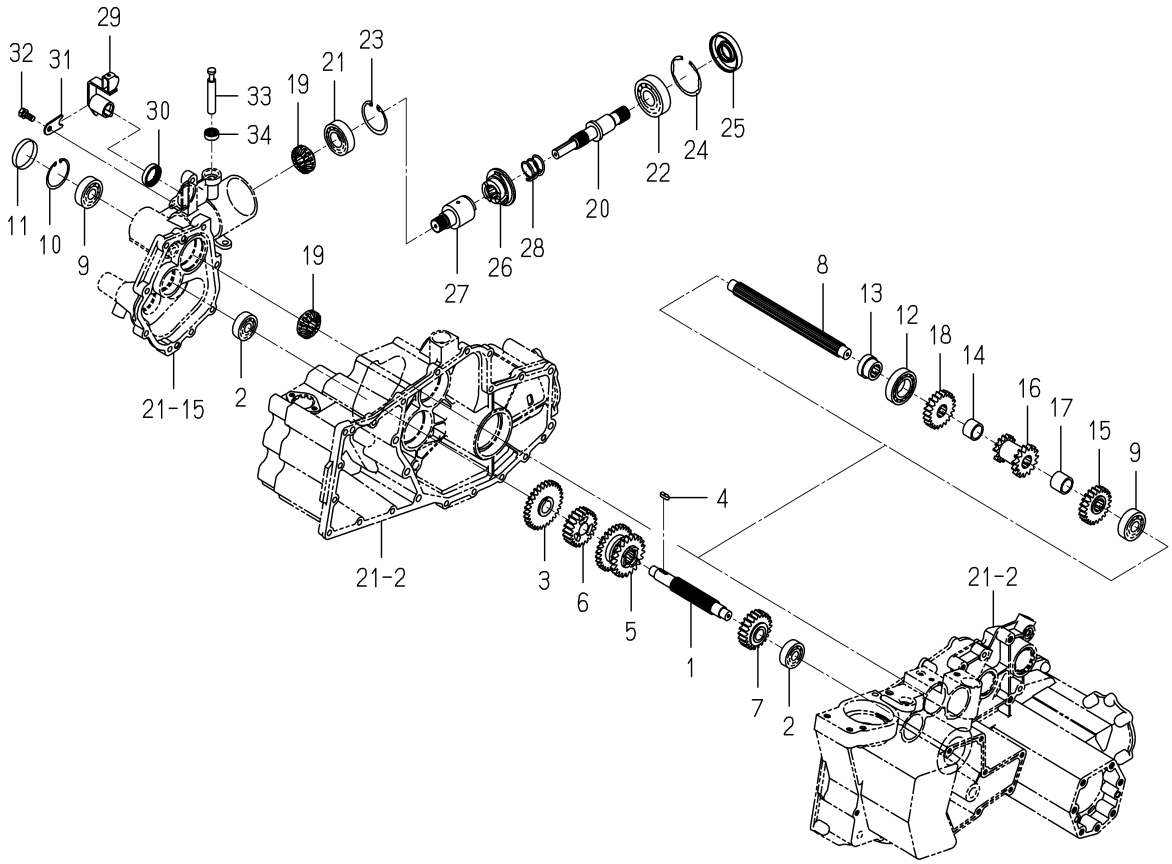

2232-211 -0100

KEY	PART CODE	DESCRIPTION	SPC	TYPE OF MODEL NP60E16		ITC	COL	GRP	REMARKS
31	2232-211-016-00	PLATE/PLANTING CLUTC	*	1					
32	2144-701-021-00	BOLT	*	1					
33	2232-211-025-00	PIN/PLANTING/CLUTCH	*	1					
34	V744-112-220-70	SEAL,OIL TC122207	*	1					

FIG. 34 SHAFT(PLANTING/OUT)SYSTEM(D TYPE)

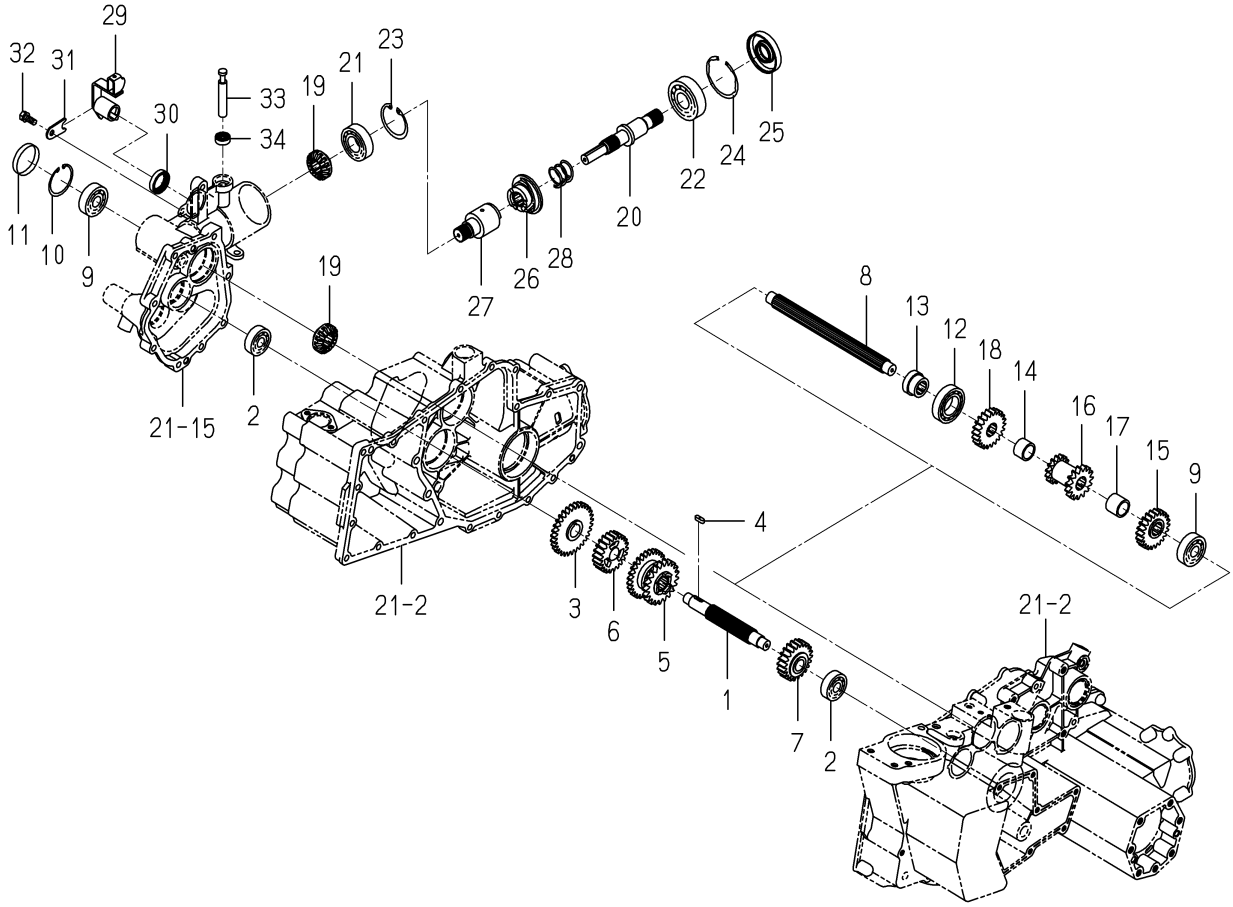

2233-211 -0100

KEY	PART CODE	DESCRIPTION	SPC	TYPE OF MODEL NP60E16		ITC	COL	GRP	REMARKS
1	2232-211-001-10	SHAFT/CHANGE	*	1					
2	V600-110-630-20	BEARING,RB/6302	*	2					
3	2233-211-200-00	GEAR/SPUR/31 COMP	*	1					
4	2232-211-037-00	KEY/05X05X17	*	1					
5	2232-211-003-00	GEAR/SPUR/21-28	*	1					
6	2232-211-004-00	GEAR/SPARSE PLANTING	*	1					
7	2232-211-005-00	GEAR/SPARSE PLANTING	*	1					
8	2232-211-006-20	SHAFT/DRIVEN	*	1					
9	V600-110-630-30	BEARING,RB/6303	*	2					
10	V705-140-047-00	RING,SNAP/47 C	*	1					
11	2194-701-010-00	PLUG/47	*	1					
12	V600-110-600-60	BEARING,RB 6006	*	1					
13	2232-211-035-00	HUB/PLANTING/DRIVEN	*	1					
14	2232-211-033-10	COLOR/21X27X18	*	2					
15	2232-211-018-00	GEAR/SPARSE PLANTING	*	1					
16	2232-211-007-00	GEAR/SPUR/15-15	*	1					
17	2232-211-034-00	COLOR/21X27X23	*	1					
18	2232-211-017-00	GEAR/SPARSE PLANTING	*	1					
19	2232-211-024-00	GEAR/BEVEL/15/NP	*	2					
20	2232-211-015-10	SHAFT/PLANT/OUT	*	1					
21	V600-110-620-50	BEARING,RB/6205	*	1					
22	V600-110-630-50	BEARING,RB/6305	*	1					
23	V705-140-052-00	RING,SNAP/52 C	*	1					
24	V707-140-062-00	RING,SNAP/R62	*	1					
25	8595-201-025-00	SEAL/OIL	*	1					
26	2232-211-013-00	CLUTCH/PLANTING	*	1					
27	2232-211-014-10	CLUCH/PLANTER/DRIVE	*	1					
28	2180-203-002-00	SPRING/HC028	*	1					
29	2232-211-200-10	SHIFTER/CLUTCH/REVER	*	1					
30	V744-125-350-70	SEAL,OIL/TC25357	*	1					

FIG. 34 SHAFT(PLANTING/OUT)SYSTEM(D TYPE)

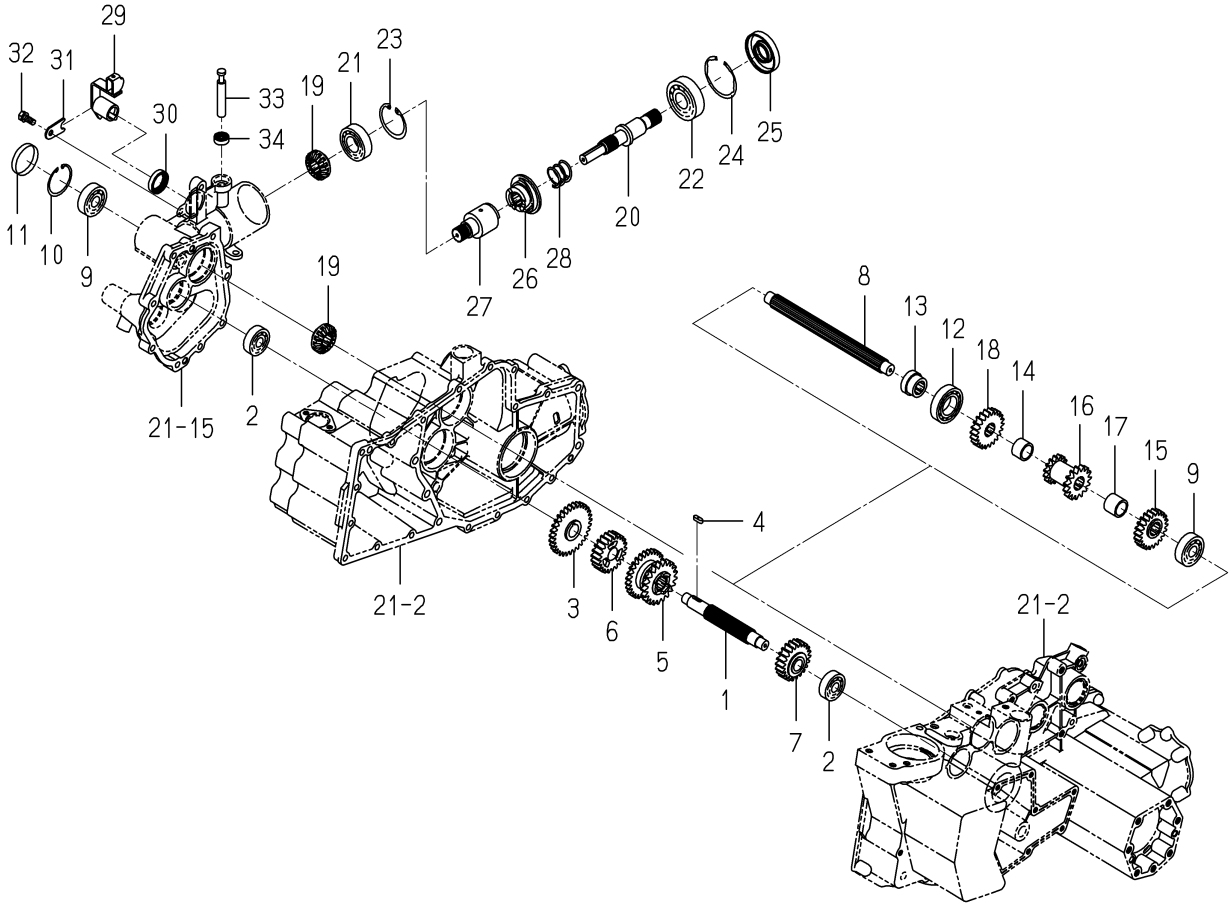

2233-211 -0100

KEY	PART CODE	DESCRIPTION	SPC	TYPE OF MODEL NP60E16		ITC	COL	GRP	REMARKS
31	2232-211-016-00	PLATE/PLANTING CLUTC	*	1					
32	2144-701-021-00	BOLT	*	1					
33	2232-211-025-00	PIN/PLANTING/CLUTCH	*	1					
34	V744-112-220-70	SEAL,OIL TC122207	*	1					

FIG. 35 SHIFTER(CHANGE)SYSTEM

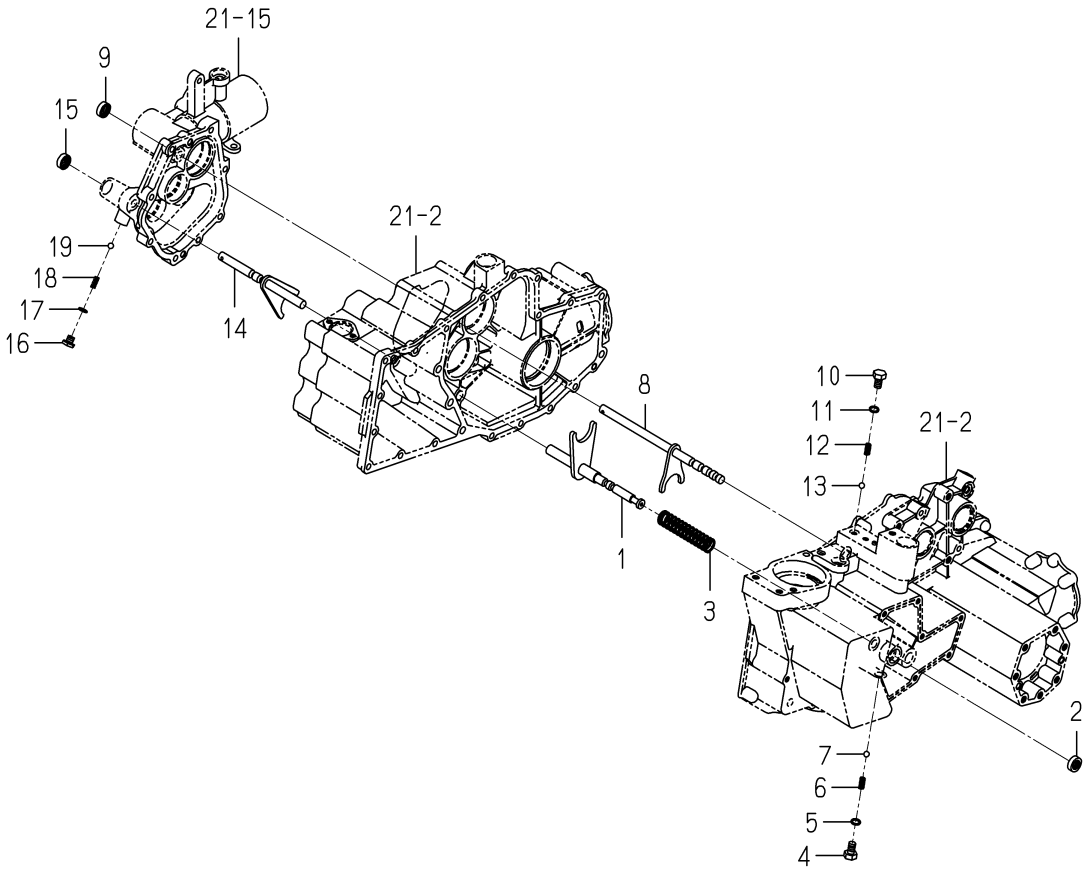

2232-212 -0100

KEY	PART CODE	DESCRIPTION	SPC	TYPE OF MODEL NP60E16		ITC	COL	GRP	REMARKS
1	2232-212-200-10	SHFTER/CHANGE/DRIVE	*	1					
2	V744-112-220-70	SEAL,OIL TC122207	*	1					
3	2232-212-001-00	SPRING/HC100	*	1					
4	2194-210-001-00	BOLT/10X16/PQ	*	1					
5	V720-101-901-00	O-RING/P10	*	1					
6	2132-210-005-00	SPRING/SHIFTER/P	*	1					
7	V682-200-001-00	BALL	*	1					
8	2232-212-210-00	SHIFTER/PLANTING/MEI	*	1					
9	V744-112-220-70	SEAL,OIL TC122207	*	1					
10	2194-210-001-00	BOLT/10X16/PQ	*	1					
11	V720-101-901-00	O-RING/P10	*	1					
12	2132-210-005-00	SPRING/SHIFTER/P	*	1					
13	V682-200-001-00	BALL	*	1					
14	2232-212-220-00	SHIFTER/PLANTING/SUB	*	1					
15	V744-112-220-70	SEAL,OIL TC122207	*	1					
16	2232-212-003-00	BOLT/SHIFT/PLANTING/	*	1					
17	V720-101-901-00	O-RING/P10	*	1					
18	2132-210-005-00	SPRING/SHIFTER/P	*	1					
19	V682-200-001-00	BALL	*	1					

FIG. 36 LEVER(PLANTING INTERVAL)SYSTEM

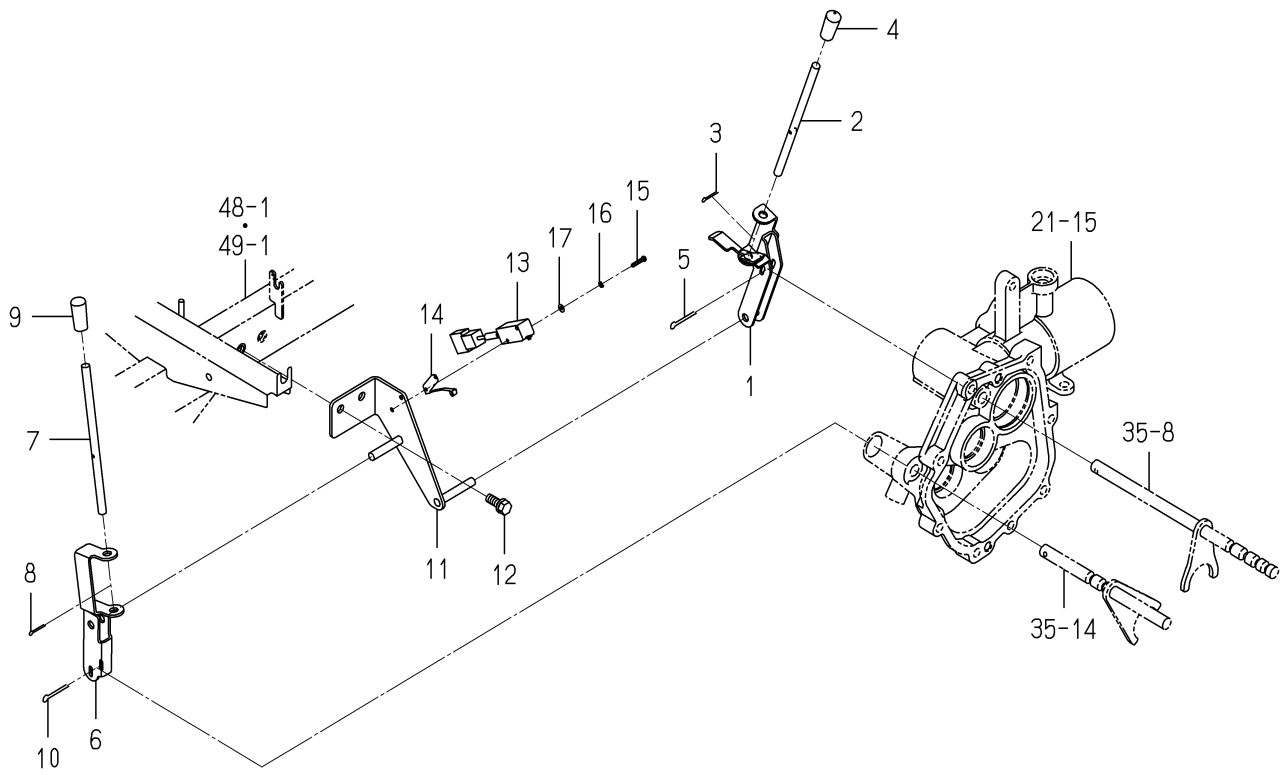

2232-213 -0100

KEY	PART CODE	DESCRIPTION	SPC	TYPE OF MODEL NP60E16		ITC	COL	GRP	REMARKS
1	2232-213-220-30	ARM/PLANTING/A COMP	*	1					
2	2232-213-002-10	ROD/PLANTING	*	1					
3	V500-162-501-50	PIN,SPLIT/2.5X15	*	1					
4	2204-556-003-00	CAP/GREEN/8	*	1					
5	V500-164-002-50	PIN,SPLIT/4 X25	*	1					
6	2232-213-200-20	ARM/PLANTING/B COMP	*	1					
7	2232-213-002-10	ROD/PLANTING	*	1					
8	V500-162-501-50	PIN,SPLIT/2.5X15	*	1					
9	3838-620-002-00	GRIP/07X34	*	1					
10	V500-164-002-50	PIN,SPLIT/4 X25	*	1					
11	2232-213-210-10	STAY/LEVER COMP	*	1					
12	V211-260-802-00	BOLT/S	*	2					
13	3807-836-350-00	SWITCH ASSY	*	1					
14	3807-836-400-00	ACTUATOR ASSY	*	1					
15	V111-163-001-60	SCREW/M3X16	*	2					
16	V401-160-003-00	WASHER,SP/M 3	*	2					
17	V411-260-003-00	WASHER/M3	*	2					

FIG. 37 SHAFT(DIFF-LOCK)SYSTEM

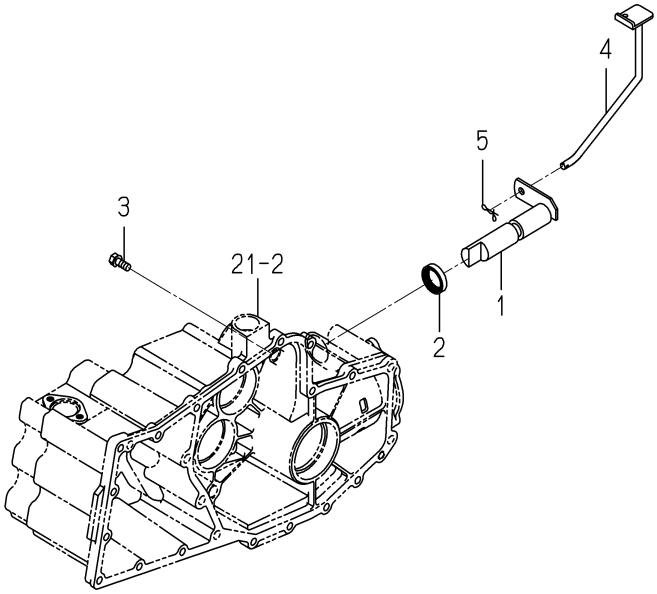

2232-215 -0100

KEY	PART CODE	DESCRIPTION	SPC	TYPE OF MODEL NP60E16		ITC	COL	GRP	REMARKS
1	2232-215-210-00	SHAFT/DIFFLOCK/NP	*	1					
2	V744-125-350-70	SEAL,OIL/TC25357	*	1					
3	2161-214-003-00	BOLT	*	1					
4	2232-215-230-10	PEDAL/DIFFLOCK COMP	*	1					
5	2161-735-006-00	PIN	*	1					

FIG. 38 WHEEL(REAR)SYSTEM(D TYPE)

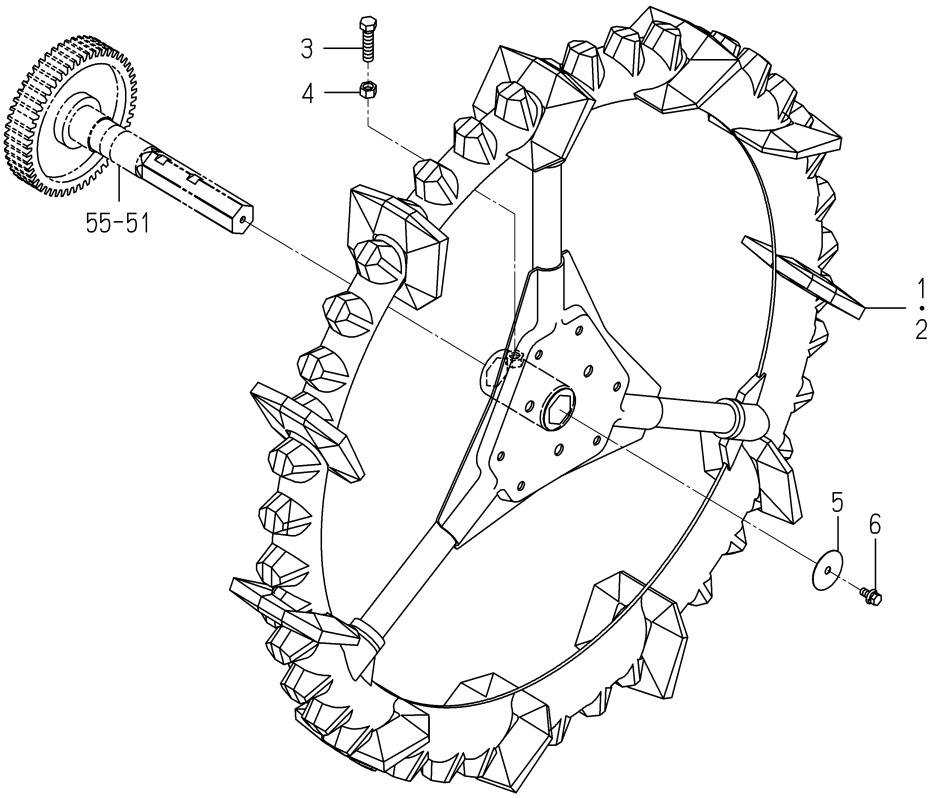

2233-222 -0100

KEY	PART CODE	DESCRIPTION	SPC	TYPE OF MODEL NP60E16		ITC	COL	GRP	REMARKS
1	2233-222-200-10	WHEEL/950/LH COMP	*	1					
2	2233-222-210-10	WHEEL/950/RH COMP	*	1					
3	2204-222-001-00	BOLT/M12X45	*	2					
4	V304-260-012-00	NUT/M12	*	2					
5	2142-307-002-00	WASHER	*	2					
6	V211-360-802-00	BOLT/SP	*	2					

FIG. 39 WHEEL(REAR)SYSTEM(G TYPE)

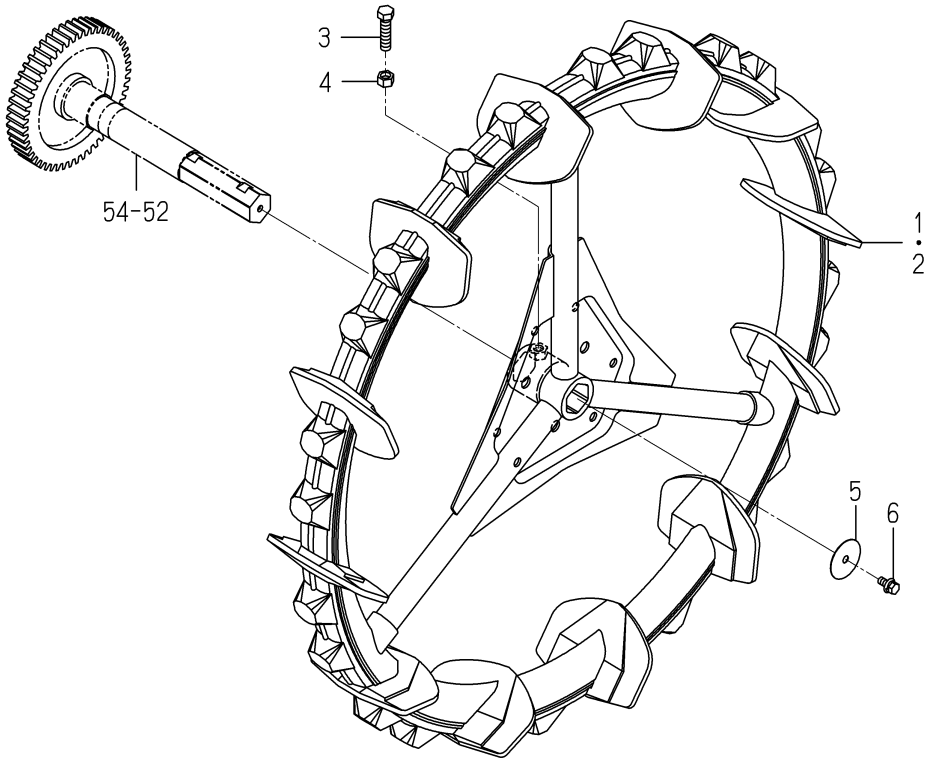

2232-222A-0100

KEY	PART CODE	DESCRIPTION	SPC	TYPE OF MODEL NP60E16		ITC	COL	GRP	REMARKS
1	2232-222-250-00	WHEEL/THICK RIM/900/	*	1					
2	2232-222-260-00	WHEEL/THICK RIM/900/	*	1					
3	2204-222-001-00	BOLT/M12X45	*	2					
4	V304-260-012-00	NUT/M12	*	2					
5	2142-307-002-00	WASHER	*	2					
6	V211-360-802-00	BOLT/SP	*	2					

FIG. 40 STEERING SYSTEM

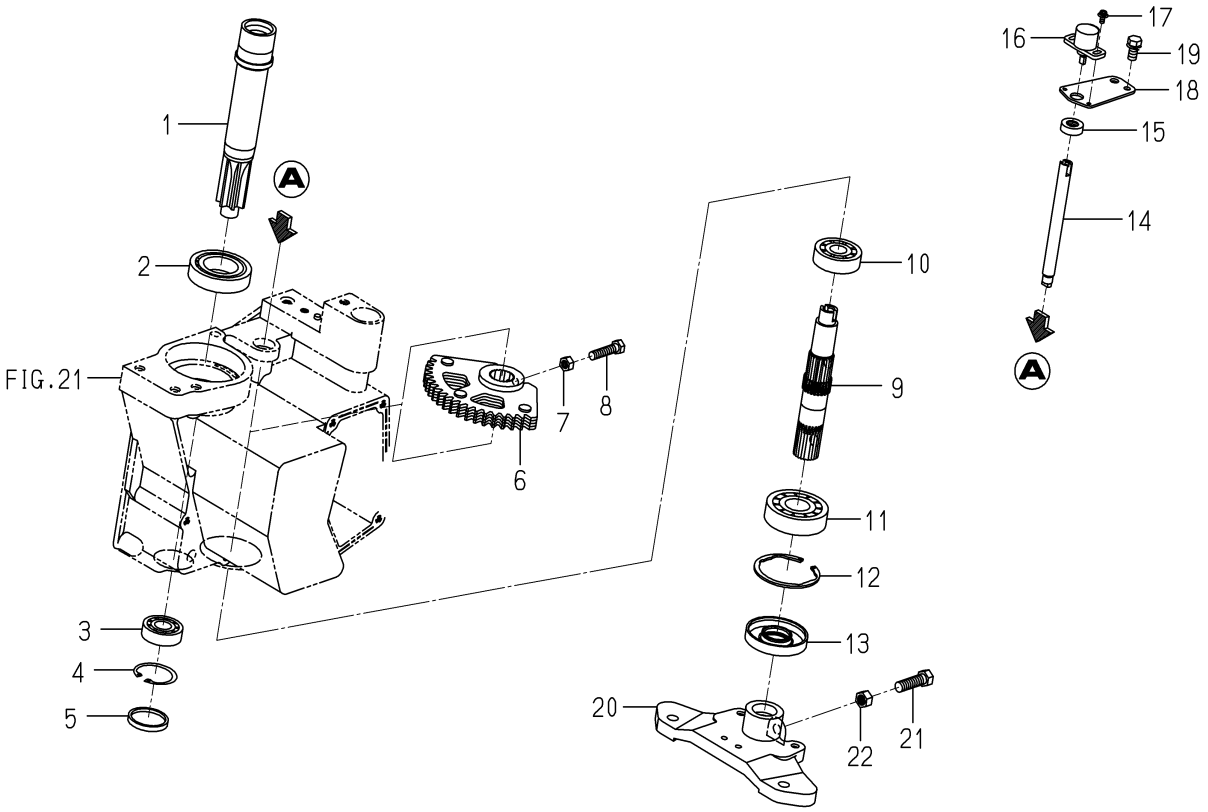

2232-302 -0100

KEY	PART CODE	DESCRIPTION	SPC	TYPE OF MODEL NP60E16		ITC	COL	GRP	REMARKS
1	2232-302-210-00	SHAFT/STEERING/IN	*	1					
2	V600-110-600-70	BEARING,RB/6007	*	1					
3	V600-110-620-30	BEARING,RB/6203	*	1					
4	V705-140-040-00	RING,SNAP/40 C	*	1					
5	1337-708-007-00	COVER,METAL	*	1					
6	2204-302-200-10	GEAR,STERRING ARM	*	1					
7	V304-460-008-00	NUT/M8	*	1					
8	V201-360-803-50	BOLT/M8X35	*	1					
9	2232-302-006-00	SHAFT/STEARING/OUT	*	1					
10	V600-110-630-30	BEARING,RB/6303	*	1					
11	V600-110-630-50	BEARING,RB/6305	*	1					
12	V707-140-062-00	RING,SNAP/R62	*	1					
13	8595-201-025-00	SEAL/OIL	*	1					
14	2232-302-002-10	SHAFT/SENCER/STEARIN	*	1					
15	V744-112-220-70	SEAL,OIL TC122207	*	1					
16	2232-556-230-00	SENSOR/ANGLE/330	*	1					
17	V120-364-001-00	SCREW/SP	*	2					
18	2232-302-003-00	STAY/SENSOR/STEARING	*	1					
19	V211-260-801-60	BOLT,SEMS (S) M8X16	*	1					
20	2232-302-001-20	ARM/PITMAN/6	*	1					
21	V201-361-003-50	BOLT/M10X35	*	1					
22	V304-460-010-00	NUT/M10	*	1					

FIG. 41 ROD(TIE)SYSTEM

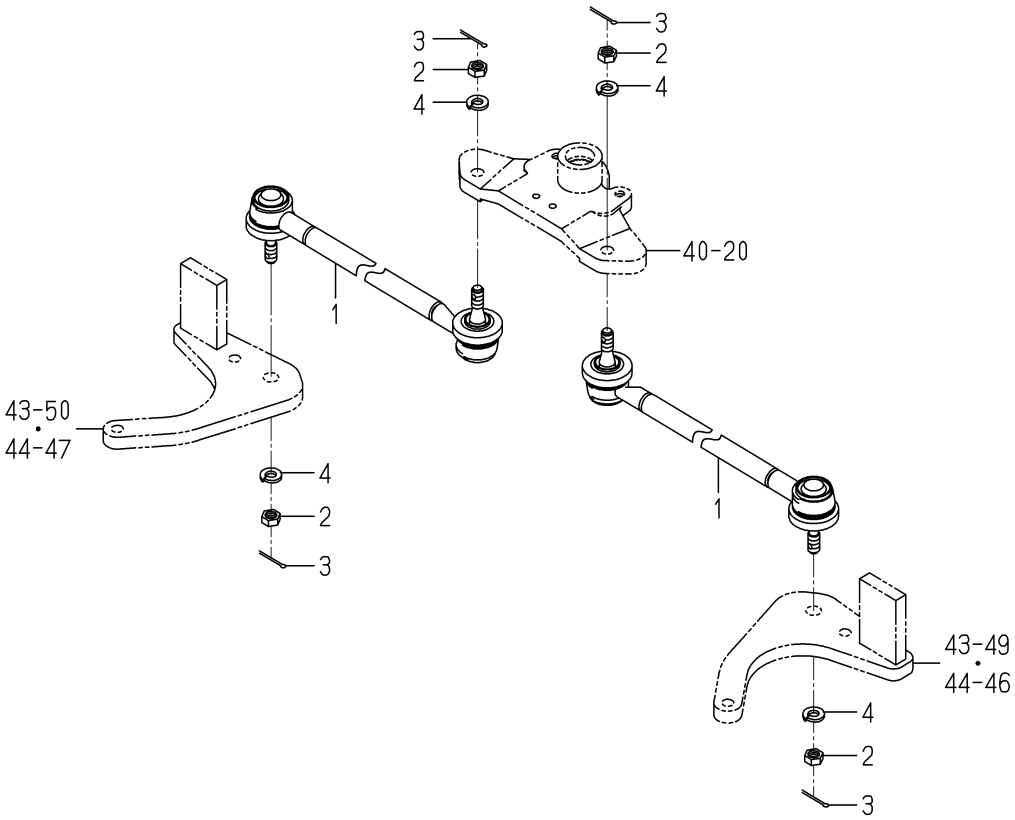

2232-303 -0100

KEY	PART CODE	DESCRIPTION	SPC	TYPE OF MODEL NP60E16		ITC	COL	GRP	REMARKS
1	2232-303-260-10	ROD/TIECOMP	*	2					
2	V335-260-010-00	NUT	*	4					
3	V500-162-502-50	PIN,SPLIT/2.5X25	*	4					
4	V401-160-010-00	WASHER,SP/M10	*	4					

FIG. 42 TURN SYSTEM

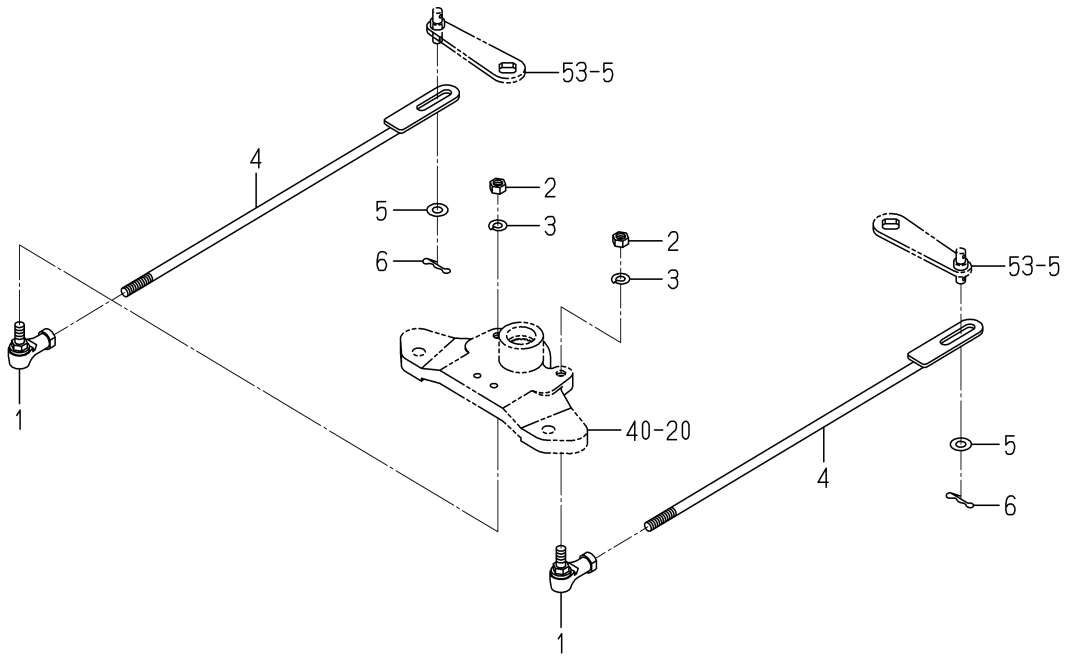

2232-304 -0100

KEY	PART CODE	DESCRIPTION	SPC	TYPE OF MODEL NP60E16		ITC	COL	GRP	REMARKS
1	1560-695-021-00	JOINT BALL M08RH	*	2					
2	V304-260-008-00	NUT	*	2					
3	V401-160-008-00	WASHER,SP/M 8	*	2					
4	2232-304-200-10	ROD/CLUTCH COMP	*	2					
5	V411-260-008-00	WASHER,PL/M 8	*	2					
6	2161-735-006-00	PIN	*	2					

FIG. 43 CASE(FINAL)SYSTEM(G TYPE)(1/2)

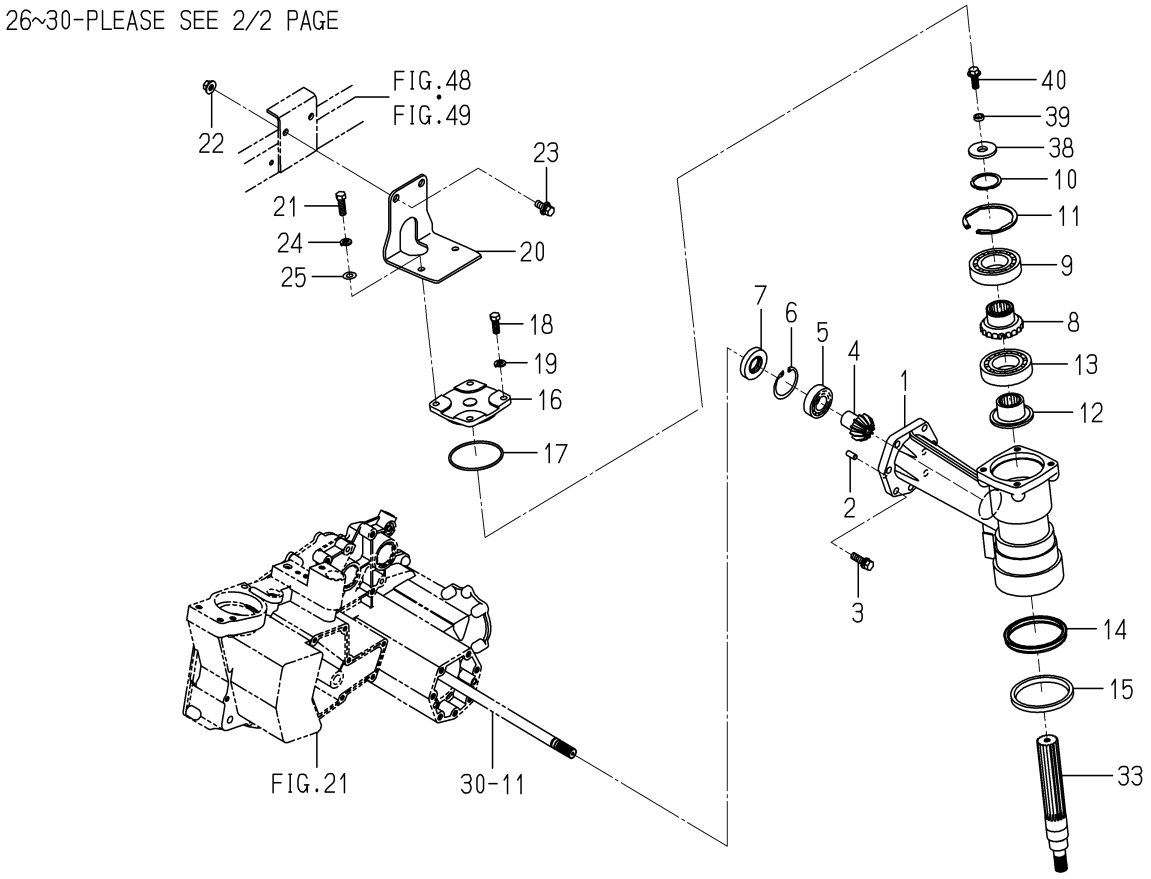

2232-310 -0100

KEY	PART CODE	DESCRIPTION	SPC	TYPE OF MODEL NP60E16		ITC	COL	GRP	REMARKS
1	2232-310-001-30	CASE/FINAL/UPPER	*	2					
2	V522-100-801-80	PIN	*	4					
3	2213-310-004-00	BOLT/M10X35/S	*	14					
4	2232-310-006-00	GEAR/BEVEL/11	*	2					
5	V600-110-620-50	BEARING,RB/6205	*	2					
6	V705-140-052-00	RING,SNAP/52 C	*	2					
7	V744-125-521-00	SEAL,OIL/TC255210	*	2					
8	2232-310-007-00	GEAR/BEVEL/20	*	2					
9	V600-110-620-90	BEARING,RB/6209	*	2					
10	V706-140-045-00	RING,SNAP/S45	*	2					
11	V707-140-085-00	RING,SNAP/R85	*	2					
12	2232-310-005-00	LINER/KINGPIN	*	2					
13	V600-110-620-90	BEARING,RB/6209	*	2					
14	2232-310-018-00	PACKING/90X105X9	*	2					
15	2232-310-019-00	SEAL/DUST/92X104X8	*	2					
16	2232-310-002-10	COVER/FRONT/UPPER	*	2					
17	V721-103-108-50	O-RING/G85	*	2					
18	V201-361-002-50	BOLT/M10X25	*	4					
19	V401-160-010-00	WASHER,SP/M10	*	4					
20	2232-310-301-00	STAY/FRONTAXLE	*	2					
21	V201-361-003-00	BOLT/M10X30	*	4					
22	V363-260-010-00	NUT/M10	*	4					
23	V211-361-002-50	BOLT/SP	*	4					
24	V401-160-010-00	WASHER,SP/M10	*	4					
25	V411-260-010-00	WASHER/M10	*	4					
26	2232-310-400-00	CASE/FINAL/LOWE COMP	*	2					
27	2232-310-009-00	GEAR/BEVEL/9	*	2					
28	7932-201-002-00	BEARING,RB/6306SH2	*	2					
29	7932-201-002-00	BEARING,RB/6306SH2	*	2					
30	V707-140-072-00	RING,SNAP/R72	*	2					

FIG. 43 CASE(FINAL)SYSTEM(G TYPE)(2/2)

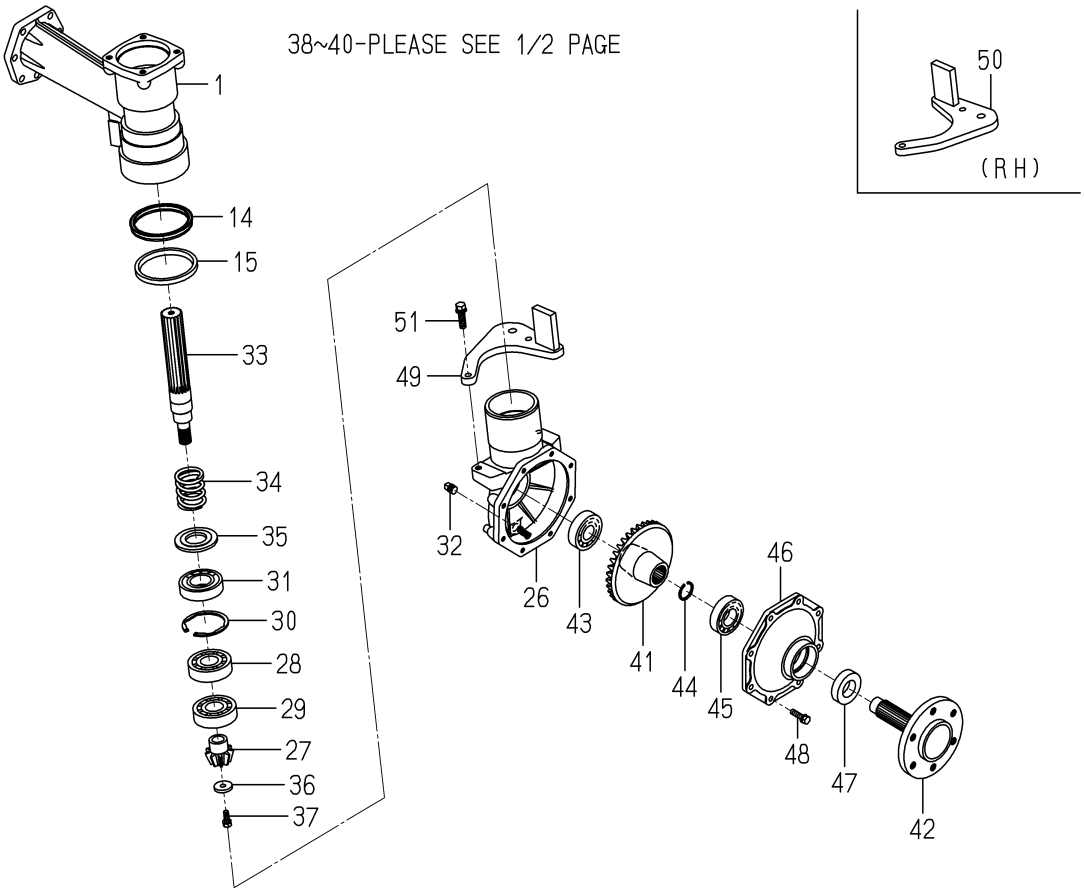

2232-310 -0100

KEY	PART CODE	DESCRIPTION	SPC	TYPE OF MODEL NP60E16		ITC	COL	GRP	REMARKS
31	V600-110-620-70	BEARING,RB/6207	*	2					
32	V781-160-000-4B	PLUG/SCREW/SEAL	*	2					
33	2232-310-008-00	SHAFT/KINGPIN	*	2					
34	2232-310-015-00	SPRING/HC053	*	2					
35	2232-310-013-10	COLLAR/SPRING	*	2					
36	2178-503-246-00	WASHER/09X30X4.5	*	2					
37	V211-560-802-00	BOLT/M8X20	*	2					
38	2232-310-031-00	WASHER/16X46X5	*	2					
39	2232-310-032-00	COLLAR/11X25X5	*	2					
40	2232-310-033-00	BOLT/FRANGE/M10X25	*	2					
41	2232-310-011-00	GEAR/BEVEL/36	*	2					
42	2232-310-012-10	SHAFT/FRONTWHEEL	*	2					
43	V600-110-630-50	BEARING,RB/6305	*	2					
44	2172-312-002-00	RING,STOP/30	*	2					
45	V600-110-620-60	BEARING,RB/6206	*	2					
46	2232-310-004-00	COVER/FINAL/FRONT	*	2					
47	2186-312-002-00	SEAL,OIL 305514	*	2					
48	V211-560-803-00	BOLT/M8X30	*	16					
49	2232-310-200-00	ARM/STOPPER/LH COMP	*	1					
50	2232-310-210-00	ARM/STOPPER/RH COMP	*	1					
51	2213-310-004-00	BOLT/M10X35/S	*	4					

FIG. 44 CASE(FINAL)SYSTEM(D TYPE)(1/2)

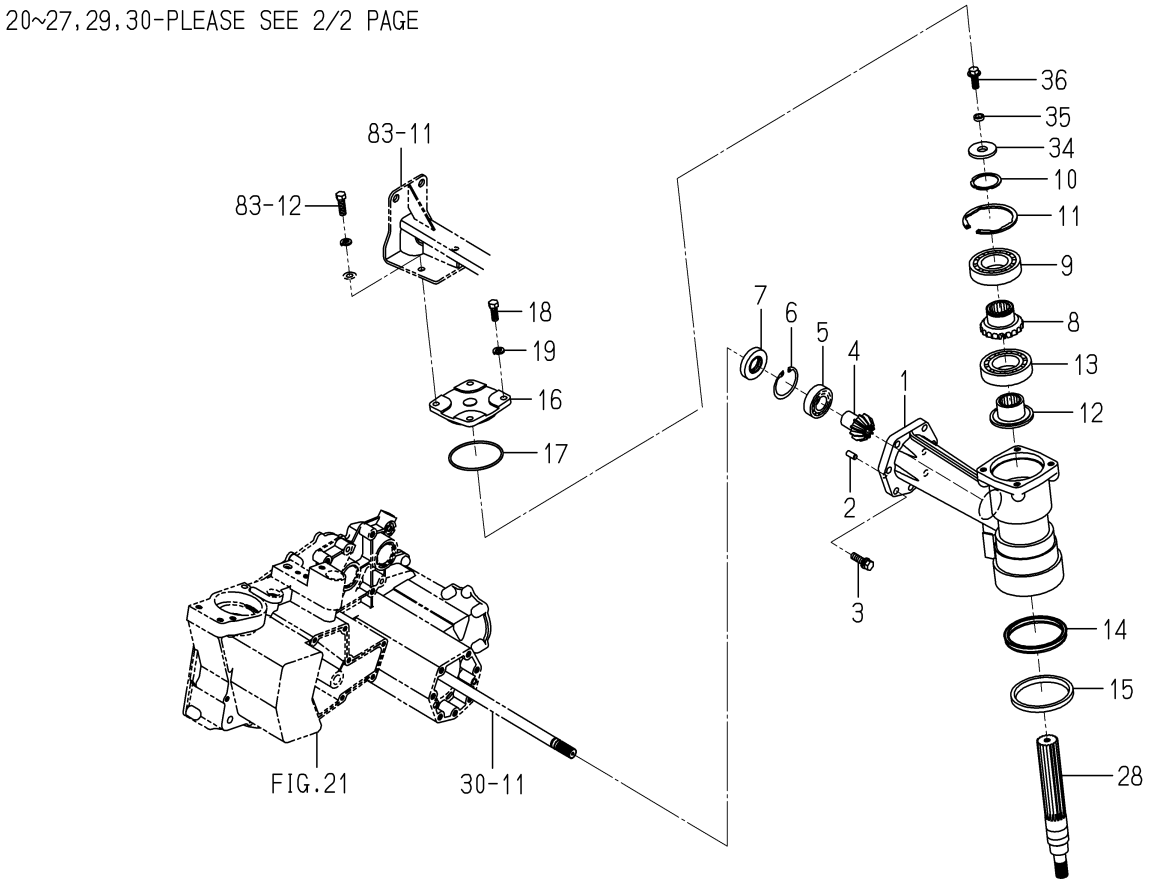

2233-310 -0100

KEY	PART CODE	DESCRIPTION	SPC	TYPE OF MODEL NP60E16		ITC	COL	GRP	REMARKS
1	2232-310-001-30	CASE/FINAL/UPPER	*	2					
2	V522-100-801-80	PIN	*	4					
3	2213-310-004-00	BOLT/M10X35/S	*	14					
4	2232-310-006-00	GEAR/BEVEL/11	*	2					
5	V600-110-620-50	BEARING,RB/6205	*	2					
6	V705-140-052-00	RING,SNAP/52 C	*	2					
7	V744-125-521-00	SEAL,OIL/TC255210	*	2					
8	2232-310-007-00	GEAR/BEVEL/20	*	2					
9	V600-110-620-90	BEARING,RB/6209	*	2					
10	V706-140-045-00	RING,SNAP/S45	*	2					
11	V707-140-085-00	RING,SNAP/R85	*	2					
12	2232-310-005-00	LINER/KINGPIN	*	2					
13	V600-110-620-90	BEARING,RB/6209	*	2					
14	2232-310-018-00	PACKING/90X105X9	*	2					
15	2232-310-019-00	SEAL/DUST/92X104X8	*	2					
16	2232-310-002-10	COVER/FRONT/UPPER	*	2					
17	V721-103-108-50	O-RING/G85	*	2					
18	V201-361-002-50	BOLT/M10X25	*	2					
19	V401-160-010-00	WASHER,SP/M10	*	2					
20	2233-310-400-00	CASE/FINAL/LOWER/D	*	2					
21	2233-310-011-00	GEAR/BEVEL/10	*	2					
22	7932-201-002-00	BEARING,RB/6306SH2	*	2					
23	7932-201-002-00	BEARING,RB/6306SH2	*	2					
24	V707-140-072-00	RING,SNAP/R72	*	2					
25	V600-110-620-70	BEARING,RB/6207	*	2					
26	2233-310-013-00	COLLAR/60X70X08	*	2					
27	V781-160-000-4B	PLUG/SCREW/SEAL	*	2					
28	2233-310-008-00	SHAFT/KINGPIN/8	*	2					
29	2232-310-015-00	SPRING/HC053	*	2					
30	2233-310-005-10	SPRING/HC054	*	2					

FIG. 44 CASE(FINAL)SYSTEM(D TYPE)(2/2)

34~36-PLEASE SEE 1/2 PAGE

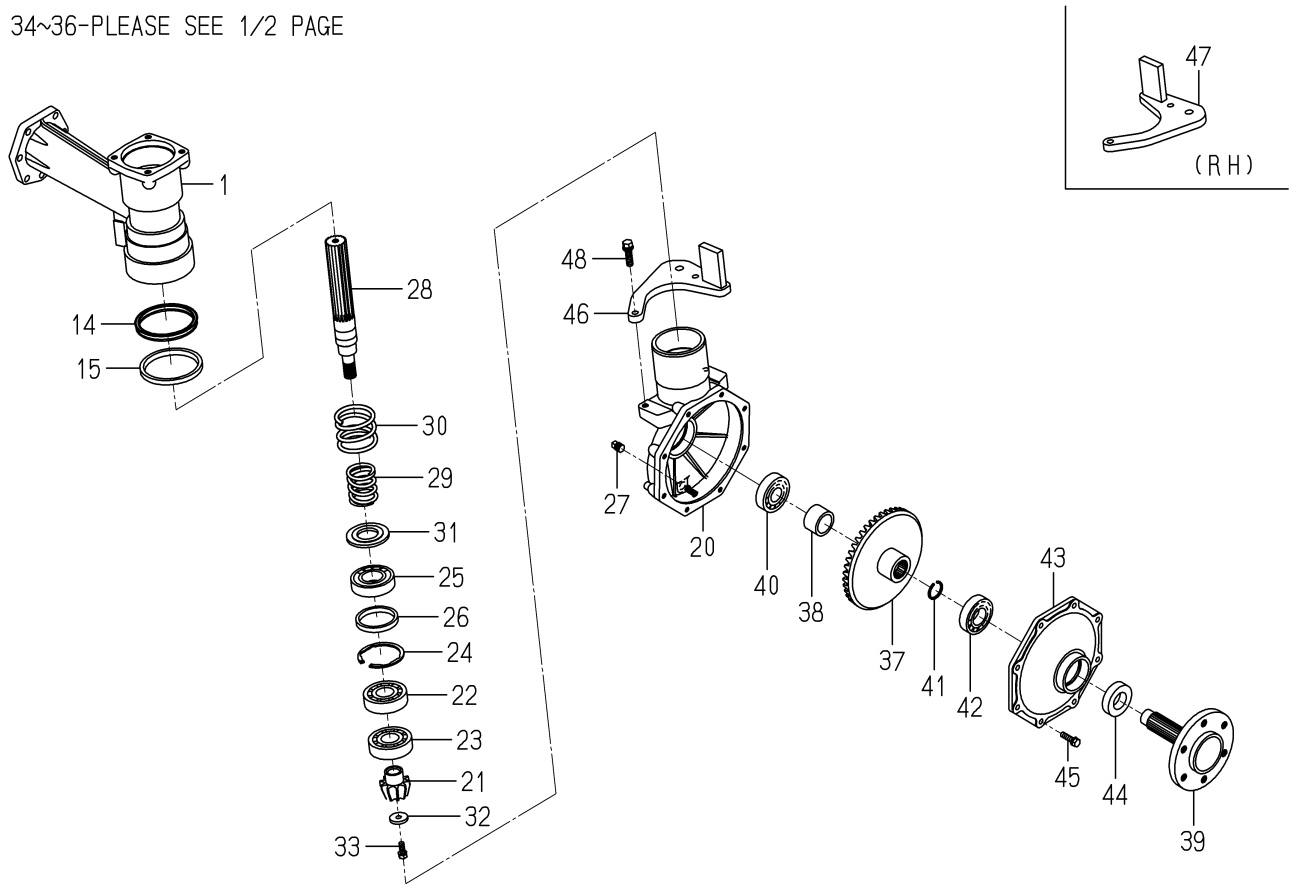

2233-310 -0100

KEY	PART CODE	DESCRIPTION	SPC	TYPE OF MODEL NP60E16		ITC	COL	GRP	REMARKS
31	2232-310-013-10	COLLAR/SPRING	*	2					
32	2178-503-246-00	WASHER/09X30X4.5	*	2					
33	V211-560-802-00	BOLT/M8X20	*	2					
34	2232-310-031-00	WASHER/16X46X5	*	2					
35	2232-310-032-00	COLLAR/11X25X5	*	2					
36	2232-310-033-00	BOLT/FRANGE/M10X25	*	2					
37	2233-310-007-00	GEAR/BEVEL/44	*	2					
38	2233-310-014-00	COLLAR/33X43X28	*	2					
39	2232-310-012-10	SHAFT/FRONTWHEEL	*	2					
40	V600-110-630-50	BEARING,RB/6305	*	2					
41	2172-312-002-00	RING,STOP/30	*	2					
42	V600-110-620-60	BEARING,RB/6206	*	2					
43	2233-310-002-00	COVER/FAINAL/FRONT/D	*	2					
44	2186-312-002-00	SEAL,OIL 305514	*	2					
45	V211-560-803-00	BOLT/M8X30	*	16					
46	2232-310-200-00	ARM/STOPPER/LH COMP	*	1					
47	2232-310-210-00	ARM/STOPPER/RH COMP	*	1					
48	2213-310-004-00	BOLT/M10X35/S	*	4					

FIG. 45 WHEEL(FRONT)SYSTEM(G TYPE)

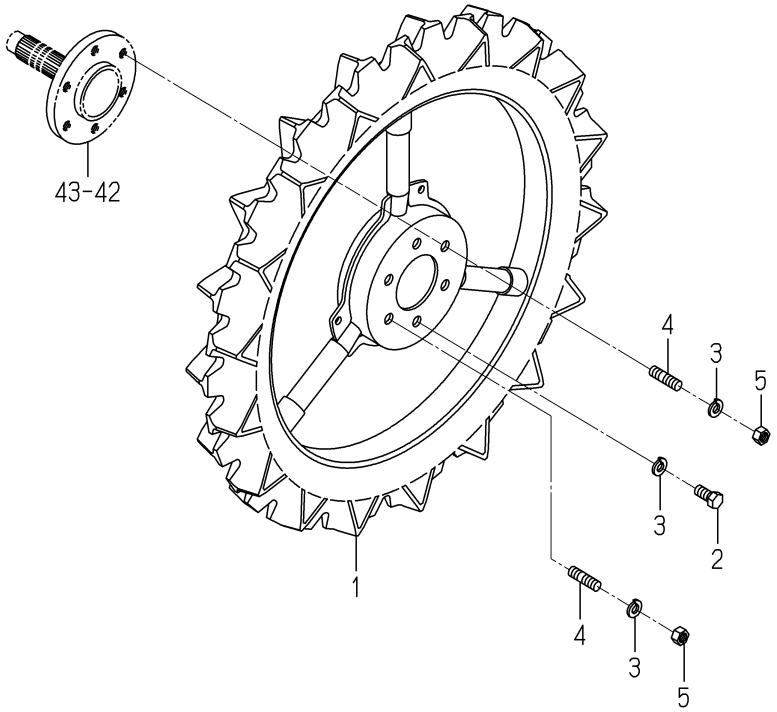

2232-316 -0100

KEY	PART CODE	DESCRIPTION	SPC	TYPE OF MODEL NP60E16		ITC	COL	GRP	REMARKS
1	2232-316-200-00	TIRE/FRONT/650 COMP	*	2					
2	V201-361-202-50	BOLT/M12X25	*	10					
3	V401-160-012-00	WASHER,SP/M12	*	12					
4	V251-341-202-50	BOLT/M12X25	*	2					
5	V304-460-012-00	NUT/M12	*	2					

FIG. 46 WHEEL(FRONT)SYSTEM(D TYPE)

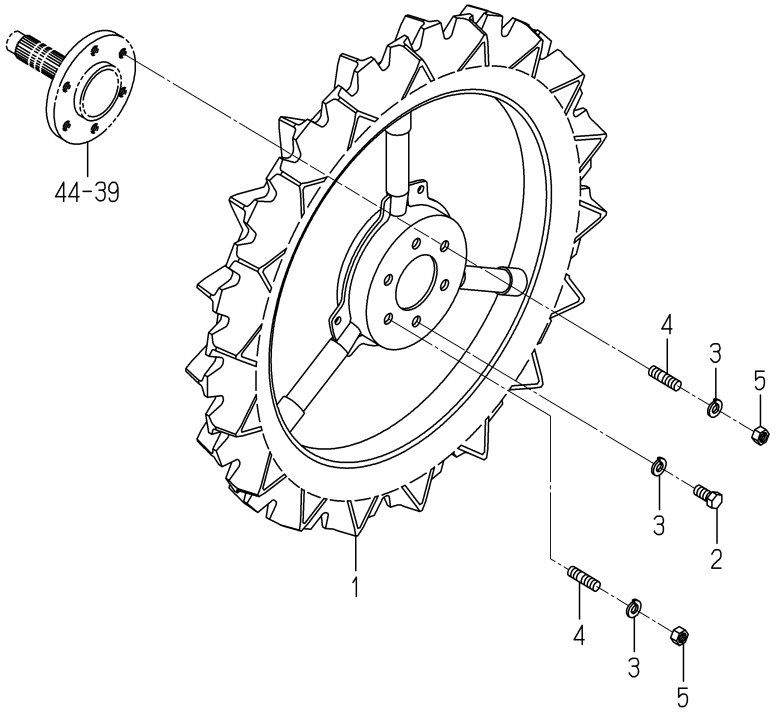

2233-316 -0100

KEY	PART CODE	DESCRIPTION	SPC	TYPE OF MODEL NP60E16		ITC	COL	GRP	REMARKS
1	2233-316-200-10	TIRE/FRONT/650/ COMP	*	2					
2	V201-361-202-50	BOLT/M12X25	*	10					
3	V401-160-012-00	WASHER,SP/M12	*	12					
4	V251-341-202-50	BOLT/M12X25	*	2					
5	V304-460-012-00	NUT/M12	*	2					

FIG. 47 CAP(WHEEL/FRONT)SYSTEM

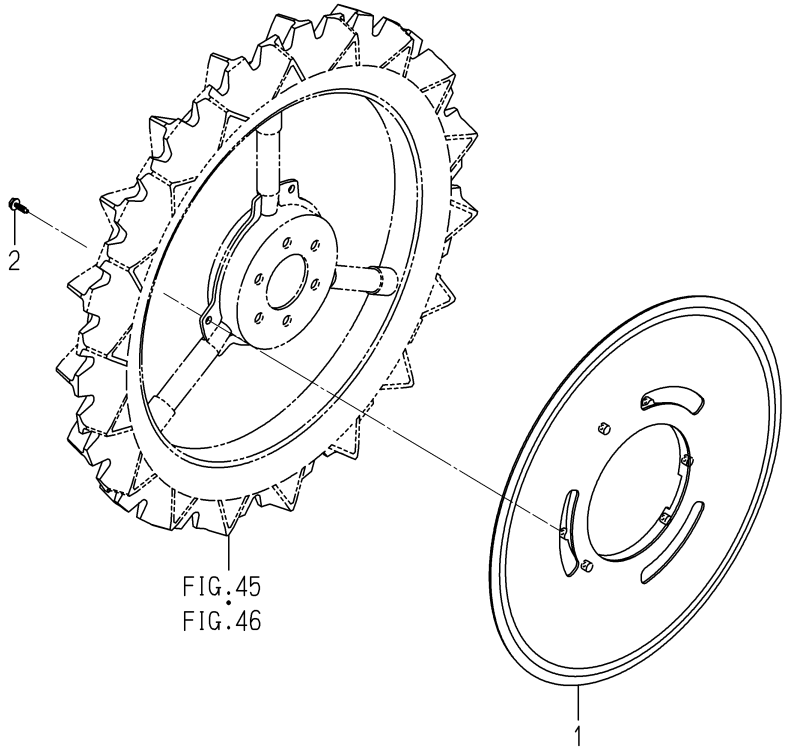

2232-317 -0100

KEY	PART CODE	DESCRIPTION	SPC	TYPE OF MODEL NP60E16		ITC	COL	GRP	REMARKS
1	2232-317-001-10	CAP/FRONTWHEEL/650	*	2					
2	2213-508-004-00	TAPBOLT/6X20	*	6					

FIG. 48 FRAME(MAIN)SYSTEM(D TYPE)

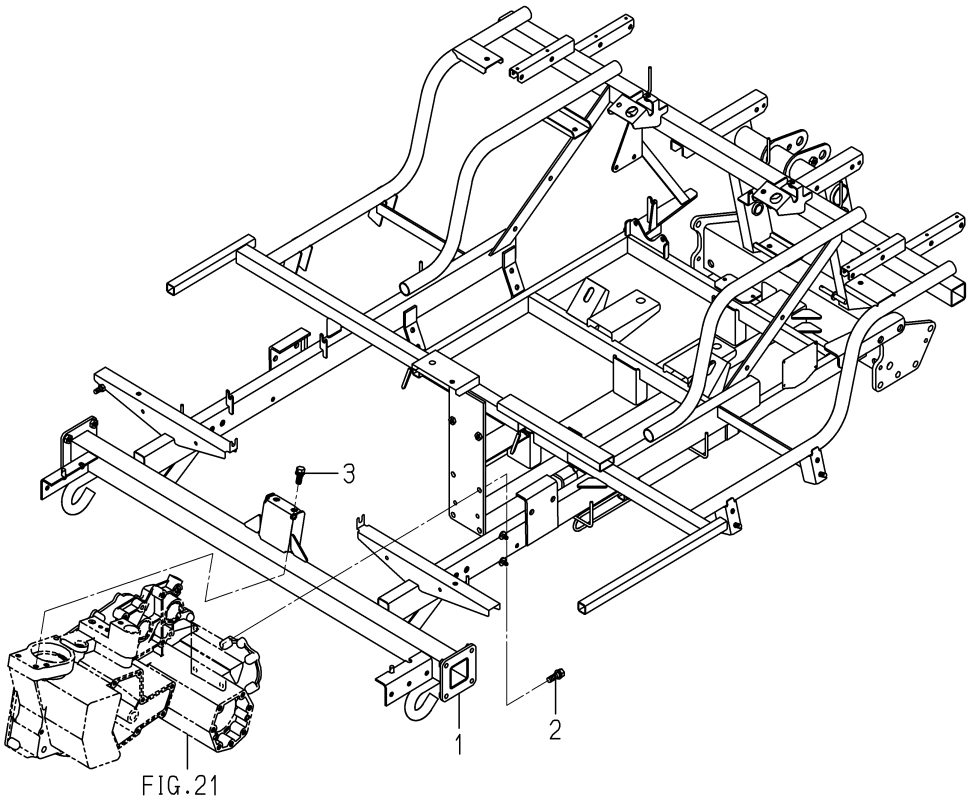

2232-320D-0100

KEY	PART CODE	DESCRIPTION	SPC	TYPE OF MODEL NP60E16		ITC	COL	GRP	REMARKS
1	2232-320-750-00	FRAME/MAIN/D/E1 COMP	*	1					
2	2204-323-011-00	BOLT/SEAL/M10X30/S	*	4					
3	2204-601-007-00	BOLT/SEAL/M10X25/S	*	2					

FIG. 49 FRAME(MAIN)SYSTEM(G TYPE)

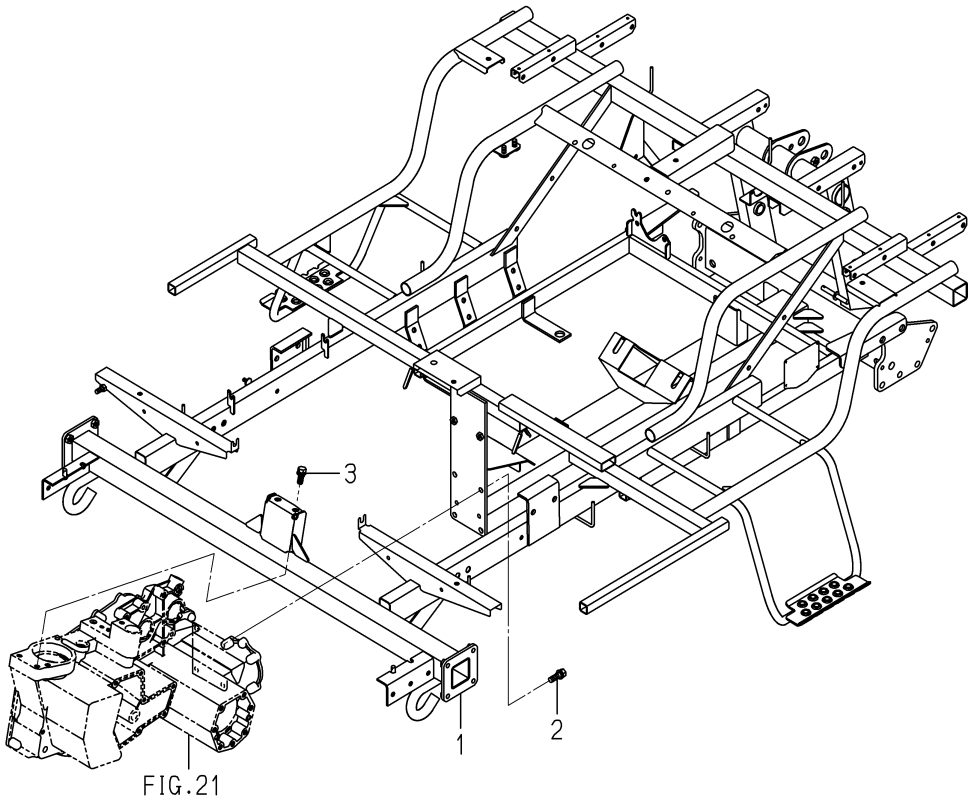

2232-320E-0100

KEY	PART CODE	DESCRIPTION	SPC	TYPE OF MODEL NP60E16		ITC	COL	GRP	REMARKS
1	2232-320-700-00	FRAME/MAIN/G/E1 COMP	*	1					
2	2204-323-011-00	BOLT/SEAL/M10X30/S	*	4					
3	2204-601-007-00	BOLT/SEAL/M10X25/S	*	2					

FIG. 50 SHAFT(DRIVE/REAR)SYSTEM(G TYPE)

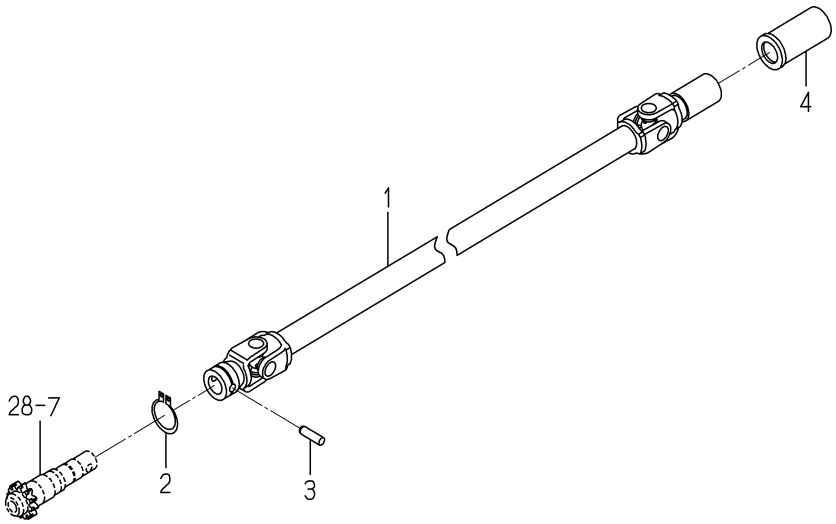

2232-321 -0100

KEY	PART CODE	DESCRIPTION	SPC	TYPE OF MODEL NP60E16		ITC	COL	GRP	REMARKS
1	2232-321-200-20	JOINT/REAR/1200 COMP	*	2					
2	V704-140-032-00	RING,SNAP/32 C	*	2					
3	2161-321-001-00	PIN STRAIGHT	*	2					
4	2194-321-001-00	BOOT,DRIVE SHAFT	*	2					

FIG. 51 SHAFT(DRIVE/REAR)SYSTEM(D TYPE)

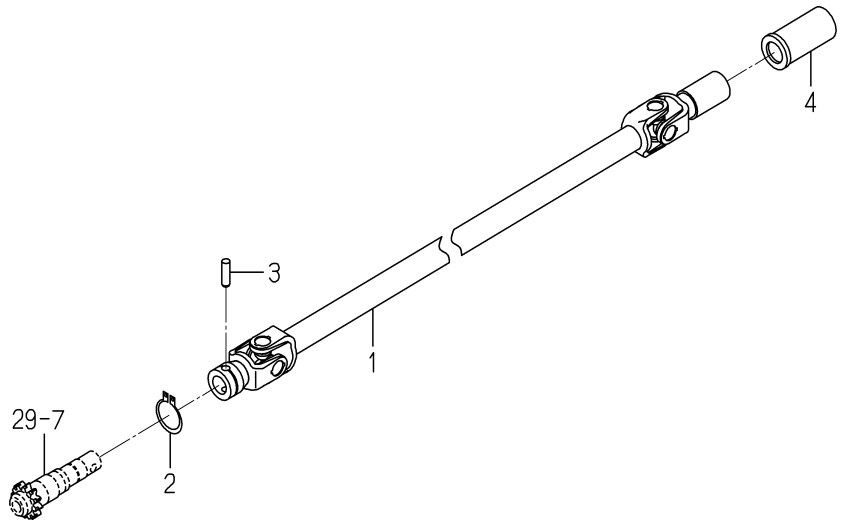

2233-321 -0100

KEY	PART CODE	DESCRIPTION	SPC	TYPE OF MODEL NP60E16		ITC	COL	GRP	REMARKS
1	2233-321-200-00	JOINT/REAR/1200/D	*	2					
2	V704-140-032-00	RING,SNAP/32 C	*	2					
3	2161-321-001-00	PIN STRAIGHT	*	2					
4	2194-321-001-00	BOOT,DRIVE SHAFT	*	2					

FIG. 52 SHAFT(PLANTING)SYSTEM

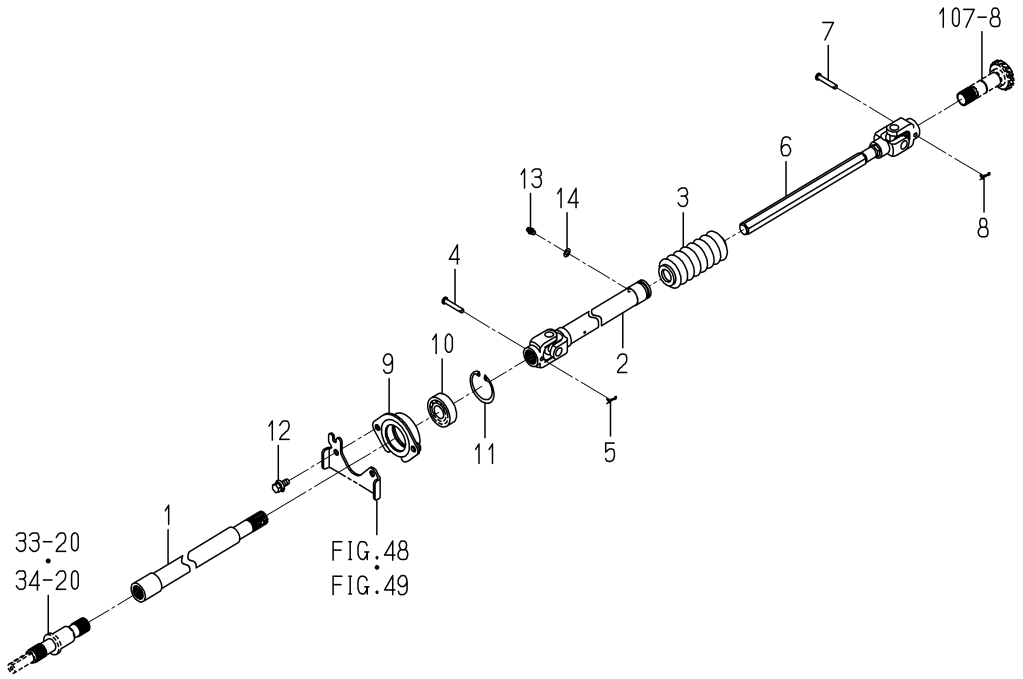

2232-322 -0100

KEY	PART CODE	DESCRIPTION	SPC	TYPE OF MODEL NP60E16		ITC	COL	GRP	REMARKS
1	2232-322-200-10	SHAFT/PLANT/FRONT/12	*	1					
2	2232-322-250-10	SHAFT/PLANT/G COMP	*	1					
3	2145-420-001-20	BOOT/SHAFT	*	1					
4	2232-322-001-00	PIN/06X36	*	1					
5	2161-735-005-00	PIN	*	1					
6	2232-322-220-10	SHAFT/PLANT/REA COMP	*	1					
7	2232-322-001-00	PIN/06X36	*	1					
8	2161-735-005-00	PIN	*	1					
9	2232-322-230-20	HOLDER/SHAFT/PLANT	*	1					
10	V600-150-620-40	BEARING,RB/6204SS	*	1					
11	V705-140-047-00	RING,SNAP/47 C	*	1					
12	V211-360-802-00	BOLT/SP	*	2					
13	V760-150-000-00	NIPPLE,GREASE	*	1					
14	V411-260-006-00	WASHER / M6	*	1					

FIG. 53 SHAFT(BRAKE)SYSTEM

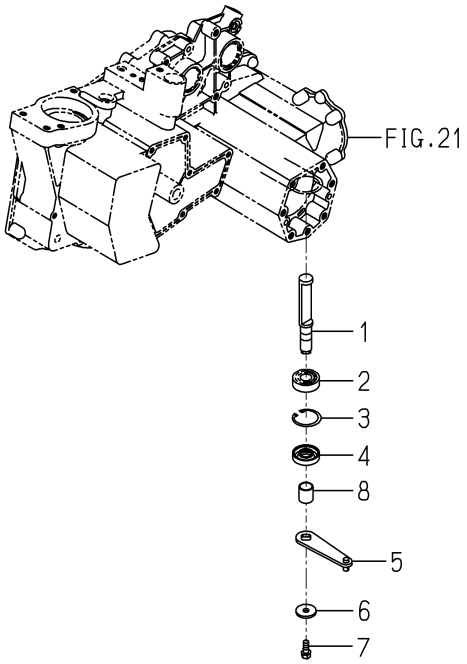

2232-325 -0100

KEY	PART CODE	DESCRIPTION	SPC	TYPE OF MODEL NP60E16		ITC	COL	GRP	REMARKS
1	2232-325-001-00	SIFTER/CLUTCH	*	2					
2	V600-110-620-30	BEARING,RB/6203	*	2					
3	V705-140-040-00	RING,SNAP/40 C	*	2					
4	V744-117-400-80	SEAL,OIL/TC17408	*	2					
5	2232-325-200-00	ARM/CLUTCH COMP	*	2					
6	3740-314-017-00	WASHER,TENSION	*	2					
7	2161-214-003-00	BOLT	*	2					
8	2232-325-003-10	TUBE/18X24	*	2					

FIG. 54 CASE(REAR)SYSTEM(G TYPE)(1/2)

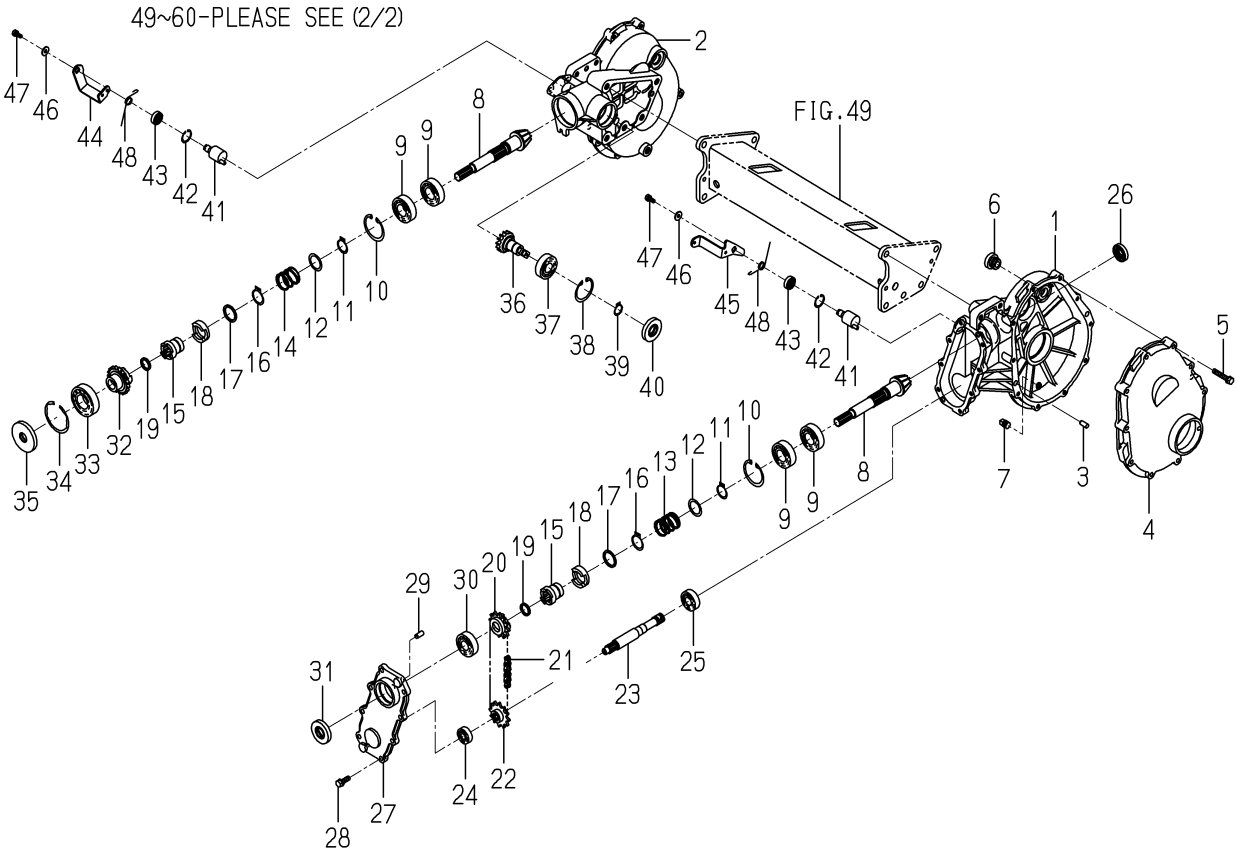

2232-330L-0100

KEY	PART CODE	DESCRIPTION	SPC	TYPE OF MODEL NP60E16		ITC	COL	GRP	REMARKS
1	2232-330-001-20	CASE/REAR/IN/LH	*	1					
2	2232-330-002-20	CASE/REAR/IN/RH	*	1					
3	V522-100-801-80	PIN	*	4					
4	2213-330-006-10	CASE/REAR/OUT/8D	*	2					
5	V211-560-804-50	BOLT,SEMS/M8X45 7T	*	20					
6	2157-201-004-10	PLUG,OIL	*	2					
7	V781-160-000-4B	PLUG/SCREW/SEAL	*	2					
8	2232-330-006-00	GEAR/BEVEL/10/FERTIL	*	2					
9	V600-110-620-50	BEARING,RB/6205	*	4					
10	V705-140-052-00	RING,SNAP/52 C	*	2					
11	V704-140-025-00	RING,SNAP/25 C	*	2					
12	2232-330-033-00	WASHER/27X36X1	*	2					
13	2232-330-014-00	SPRING/HC039	*	1					
14	2232-330-053-00	SPRING/HC033	*	1					
15	2232-330-013-10	CLUTCH/DRIVE	*	2					
16	V704-140-028-00	RING,SNAP/28 C	*	2					
17	2232-330-042-00	COLLAR/28X35X02	*	2					
18	2232-330-018-30	COLLAR/CLUTCH	*	2					
19	2232-330-032-00	COLLAR/20X25X3.2	*	2					
20	2232-330-015-00	SPROCKET/12/DRIVE	*	1					
21	2232-330-023-00	CHAIN/ROLLER/41X034	*	1					
22	2232-330-016-10	SPROCKET/12/DRIVEN	*	1					
23	2232-330-017-00	SHAFT/OUTPUT/ROTOR	*	1					
24	V600-110-620-10	BEARING,RB/6201	*	1					
25	V600-110-620-30	BEARING,RB/6203	*	1					
26	V744-117-350-70	SEAL,OIL/TC17357	*	1					
27	2232-330-004-00	COVER/REAR/INPUT	*	1					
28	V211-260-802-50	BOLT/S	*	8					
29	V522-100-801-80	PIN	*	2					
30	V600-110-620-40	BEARING,RB/6204	*	1					

FIG. 54 CASE(REAR)SYSTEM(G TYPE)(1/2)

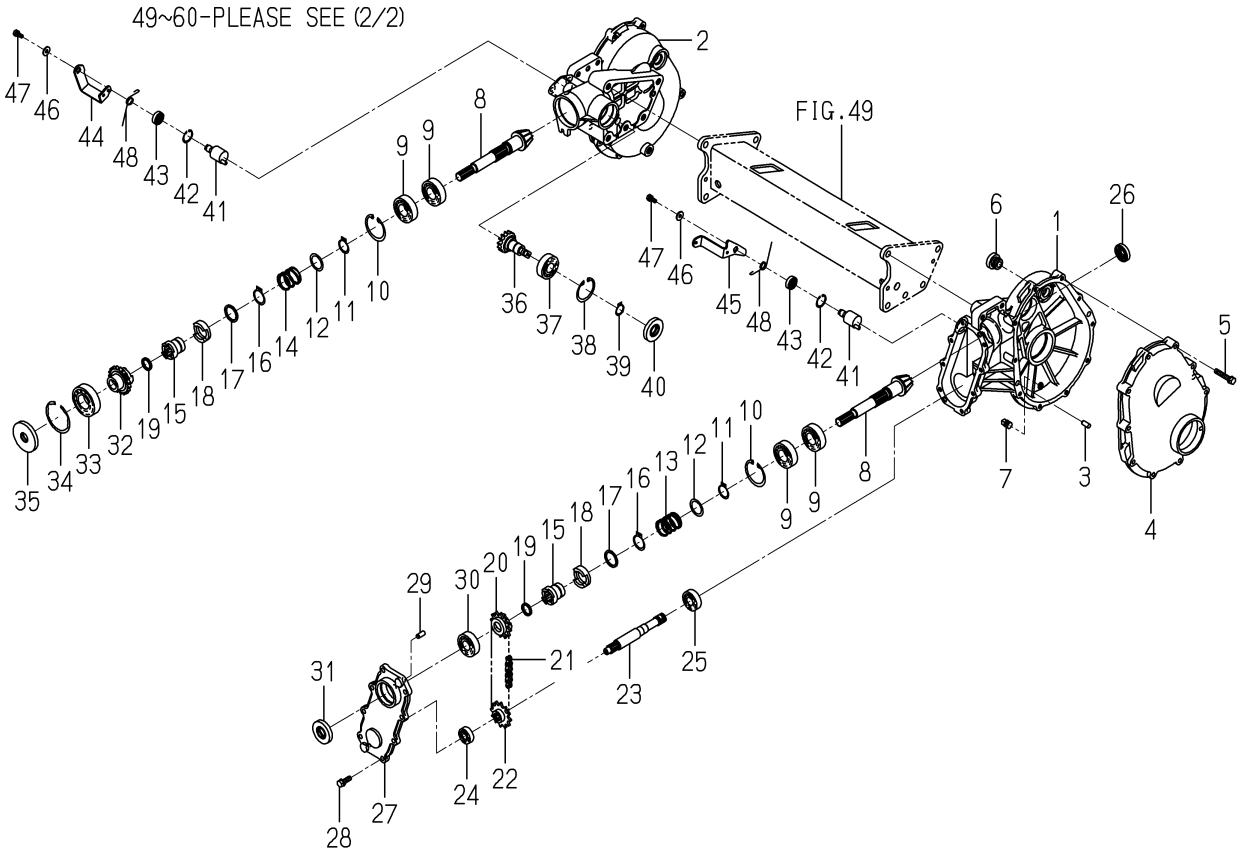

2232-330L-0100

KEY	PART CODE	DESCRIPTION	SPC	TYPE OF MODEL NP60E16		ITC	COL	GRP	REMARKS
31	2161-330-004-00	SEAL,OIL/SDD7/204	*	1					
32	2232-330-012-00	CLUTCH/DRIVEN/FERTIL	*	1					
33	V600-110-620-60	BEARING,RB/6206	*	1					
34	V707-140-062-00	RING,SNAP/R62	*	1					
35	2232-330-022-00	SEAL/OIL	*	1					
36	2232-330-039-00	SHAFT/FERTILIZE	*	1					
37	V600-110-620-40	BEARING,RB/6204	*	1					
38	V705-140-047-00	RING,SNAP/47 C	*	1					
39	V704-140-020-00	RING,SNAP/20 C	*	1					
40	2161-330-004-00	SEAL,OIL/SDD7/204	*	1					
41	2232-330-220-00	SHIFTER/FERTILIZER	*	2					
42	V705-140-025-00	RING,SNAP/25 C	*	2					
43	V744-112-250-70	SEAL,OIL/TC12257	*	2					
44	2232-330-041-10	ARM/CLUCH/FERTILIZE	*	1					
45	2233-330-051-00	ARM/CLUCH/ROTOR	*	1					
46	3560-503-302-00	WASHER,WIRE TENSION	*	2					
47	V210-260-601-60	BOLT/S	*	2					
48	2232-330-043-00	SPRING/HT015	*	2					
49	2232-330-250-00	SHAFT/COUNTER/41-10	*	2					
50	V600-110-620-40	BEARING,RB/6204	*	2					
51	V600-110-630-40	BEARING,RB/6304	*	2					
52	2232-330-260-10	SHAFT/REAR/WHEEL/6	*	2					
53	V600-110-620-60	BEARING,RB/6206	*	2					
54	V600-110-620-80	BEARING,RB/6208	*	2					
55	2162-330-007-00	SEAL,WHEEL SHAFT	*	2					
56	2232-330-045-00	BOLT/SEAL/M12X35	*	10					
57	V402-160-012-00	WASHER,SP/M12	*	10					
58	2204-323-011-00	BOLT/SEAL/M10X30/S	*	2					
59	V201-361-004-0B	BOLT/SEAL	*	2					
60	V401-160-010-00	WASHER,SP/M10	*	2					

FIG. 54 CASE(REAR)SYSTEM(G TYPE)(2/2)

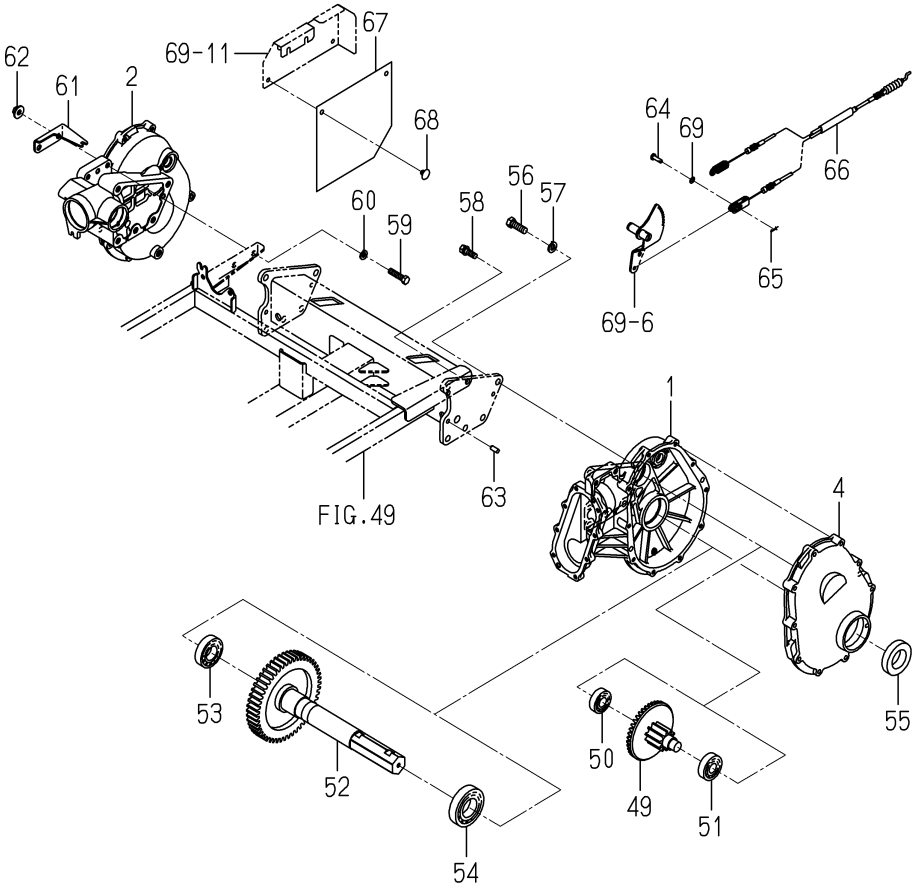

2232-330L-0100

KEY	PART CODE	DESCRIPTION	SPC	TYPE OF MODEL NP60E16		ITC	COL	GRP	REMARKS
61	2233-581-001-00	PLATE/CABLE/HOLDER	*	1					
62	V363-260-010-00	NUT/M10	*	2					
63	V522-100-801-80	PIN	*	4					
64	2111-441-019-20	PIN/2	*	1					
65	2161-735-005-00	PIN	*	1					
66	2232-330-048-00	CABLE/CLUTCH/FERTILI	*	1					
67	2232-422-025-00	COVER/FERTIRIZE CLUT	*	1					
68	2186-508-017-00	CLIP,MAT/SUNSET GRAY	*	2					
69	V411-260-006-00	WASHER / M6	*	1					

FIG. 55 CASE(REAR)SYSTEM(D TYPE)(1/2)

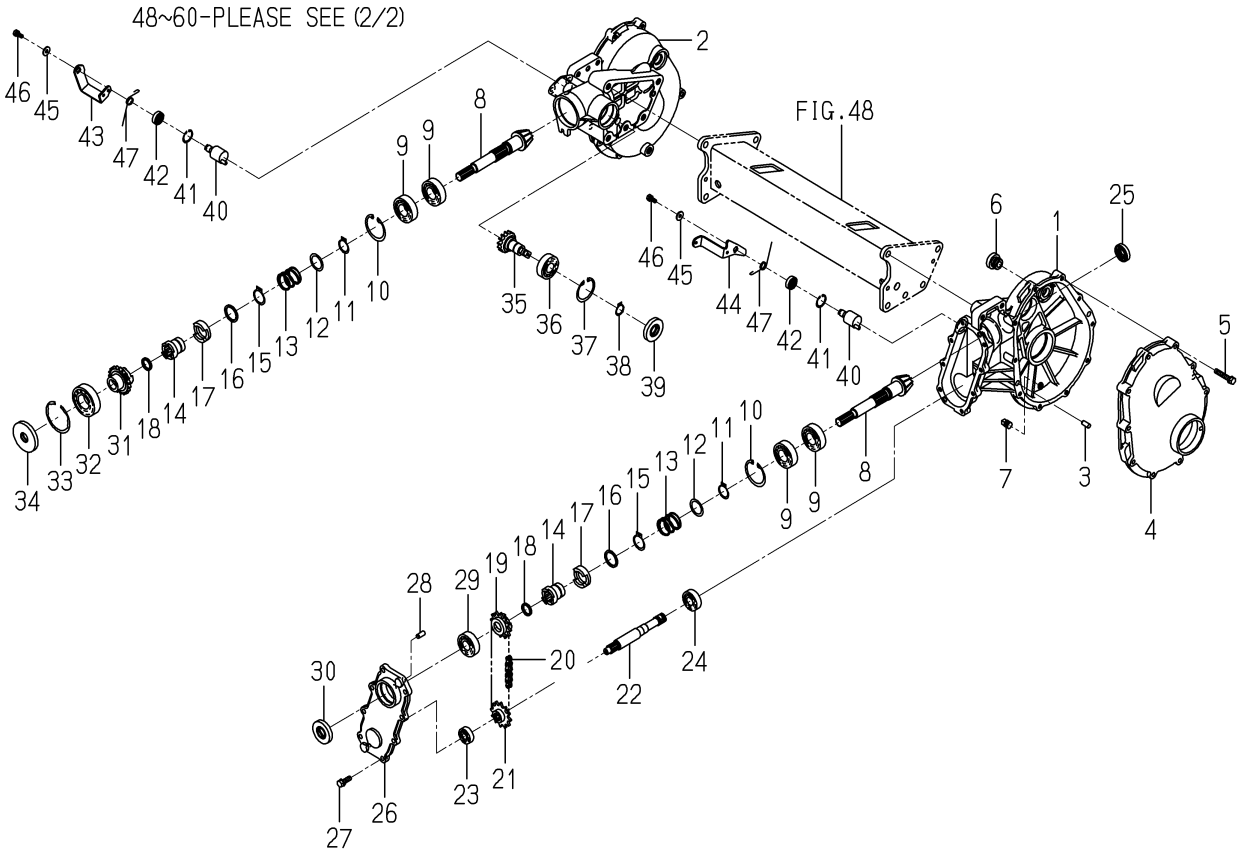

2232-330M-0100

KEY	PART CODE	DESCRIPTION	SPC	TYPE OF MODEL NP60E16		ITC	COL	GRP	REMARKS
1	2232-330-001-20	CASE/REAR/IN/LH	*	1					
2	2232-330-002-20	CASE/REAR/IN/RH	*	1					
3	V522-100-801-80	PIN	*	4					
4	2213-330-006-10	CASE/REAR/OUT/8D	*	2					
5	V211-560-804-50	BOLT,SEMS/M8X45 7T	*	20					
6	2157-201-004-10	PLUG,OIL	*	2					
7	V781-160-000-4B	PLUG/SCREW/SEAL	*	2					
8	2233-330-005-10	GEAR/BEVEL/10/FERTIL	*	2					
9	1594-221-001-00	BEARING/BALL 6205SH2	*	4					
10	V705-140-052-00	RING,SNAP/52 C	*	2					
11	V704-140-025-00	RING,SNAP/25 C	*	2					
12	2232-330-033-00	WASHER/27X36X1	*	2					
13	2232-330-053-00	SPRING/HC033	*	2					
14	2232-330-013-10	CLUTCH/DRIVE	*	2					
15	V704-140-028-00	RING,SNAP/28 C	*	2					
16	2232-330-042-00	COLLAR/28X35X02	*	2					
17	2232-330-018-30	COLLAR/CLUTCH	*	2					
18	2232-330-032-00	COLLAR/20X25X3.2	*	2					
19	2232-330-015-00	SPROCKET/12/DRIVE	*	1					
20	2232-330-023-00	CHAIN/ROLLER/41X034	*	1					
21	2232-330-016-10	SPROCKET/12/DRIVEN	*	1					
22	2232-330-017-00	SHAFT/OUTPUT/ROTOR	*	1					
23	V600-110-620-10	BEARING,RB/6201	*	1					
24	V600-110-620-30	BEARING,RB/6203	*	1					
25	V744-117-350-70	SEAL,OIL/TC17357	*	1					
26	2232-330-004-00	COVER/REAR/INPUT	*	1					
27	V211-260-802-50	BOLT/S	*	8					
28	V522-100-801-80	PIN	*	2					
29	V600-110-620-40	BEARING,RB/6204	*	1					
30	2161-330-004-00	SEAL,OIL/SDD7/204	*	1					

FIG. 55 CASE(REAR)SYSTEM(D TYPE)(1/2)

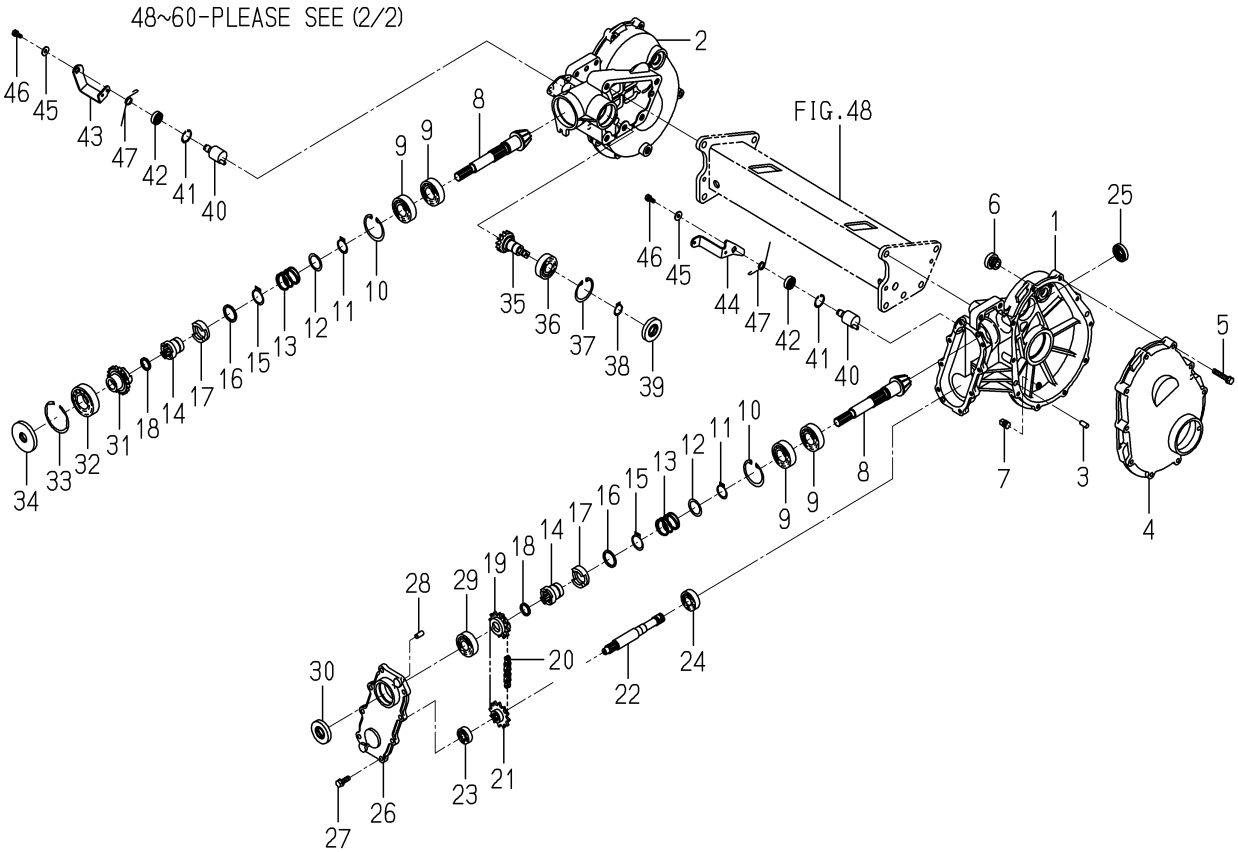

2232-330M-0100

KEY	PART CODE	DESCRIPTION	SPC	TYPE OF MODEL NP60E16		ITC	COL	GRP	REMARKS
31	2232-330-012-00	CLUTCH/DRIVEN/FERTIL	*	1					
32	V600-110-620-60	BEARING,RB/6206	*	1					
33	V707-140-062-00	RING,SNAP/R62	*	1					
34	2232-330-022-00	SEAL/OIL	*	1					
35	2232-330-039-00	SHAFT/FERTILIZE	*	1					
36	V600-110-620-40	BEARING,RB/6204	*	1					
37	V705-140-047-00	RING,SNAP/47 C	*	1					
38	V704-140-020-00	RING,SNAP/20 C	*	1					
39	2161-330-004-00	SEAL,OIL/SDD7/204	*	1					
40	2232-330-220-00	SHIFTER/FERTILIZER	*	2					
41	V705-140-025-00	RING,SNAP/25 C	*	2					
42	V744-112-250-70	SEAL,OIL/TC12257	*	2					
43	2232-330-041-10	ARM/CLUCH/FERTILIZE	*	1					
44	2233-330-051-00	ARM/CLUCH/ROTOR	*	1					
45	3560-503-302-00	WASHER,WIRE TENSION	*	2					
46	V210-260-601-60	BOLT/S	*	2					
47	2232-330-043-00	SPRING/HT015	*	2					
48	2233-330-200-10	SHAFT/COUNTER/41-9	*	2					
49	1564-263-002-00	BEARING,BALL	*	2					
50	V600-110-630-40	BEARING,RB/6304	*	4					
51	2233-330-230-00	SHAFT/REAR/WHEEL/8	*	2					
52	V600-110-620-60	BEARING,RB/6206	*	2					
53	V600-110-620-80	BEARING,RB/6208	*	2					
54	2162-330-007-00	SEAL,WHEEL SHAFT	*	2					
55	2232-330-045-00	BOLT/SEAL/M12X35	*	10					
56	V402-160-012-00	WASHER,SP/M12	*	10					
57	2204-323-011-00	BOLT/SEAL/M10X30/S	*	2					
58	V201-361-004-0B	BOLT/SEAL	*	2					
59	V401-160-010-00	WASHER,SP/M10	*	2					
60	2233-581-001-00	PLATE/CABLE/HOLDER	*	1					

FIG. 55 CASE(REAR)SYSTEM(D TYPE)(2/2)

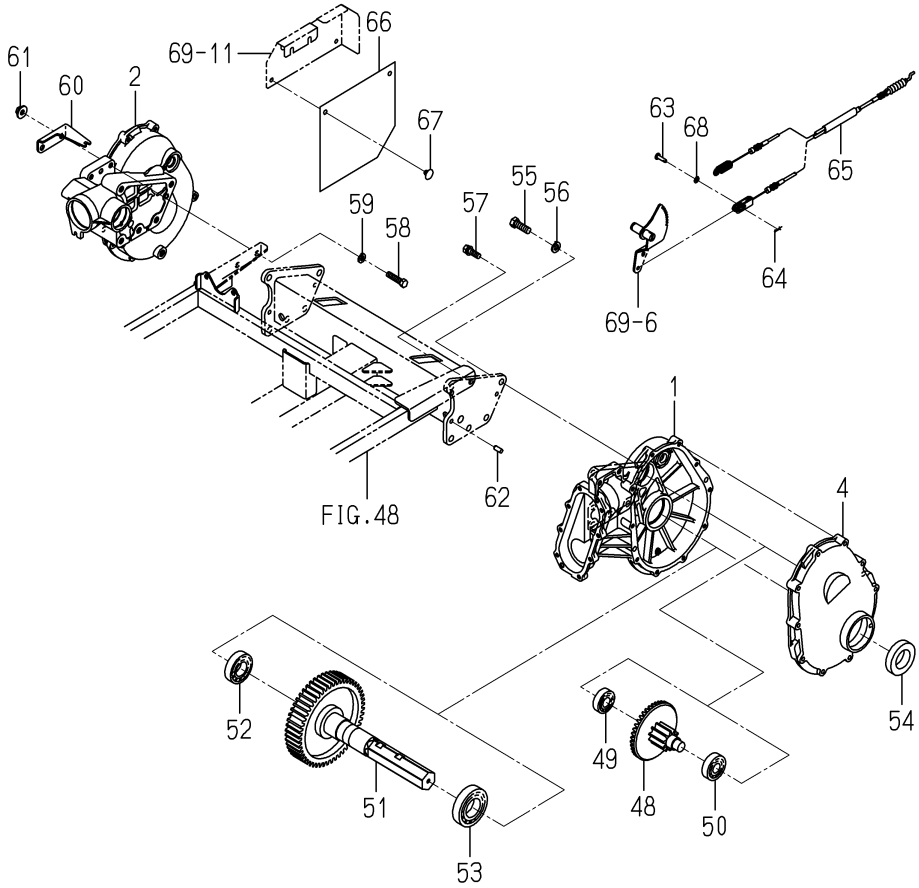

2232-330M-0100

KEY	PART CODE	DESCRIPTION	SPC	TYPE OF MODEL NP60E16		ITC	COL	GRP	REMARKS
61	V363-260-010-00	NUT/M10	*	2					
62	V522-100-801-80	PIN	*	4					
63	2111-441-019-20	PIN/2	*	1					
64	2161-735-005-00	PIN	*	1					
65	2232-330-047-00	CABLE/CLUTCH/FERTILI	*	1					
66	2232-422-025-00	COVER/FERTIRIZE CLUT	*	1					
67	2186-508-017-00	CLIP,MAT/SUNSET GRAY	*	2					
68	V411-260-006-00	WASHER / M6	*	1					

FIG. 56 WHEEL(STEERING)SYSTEM

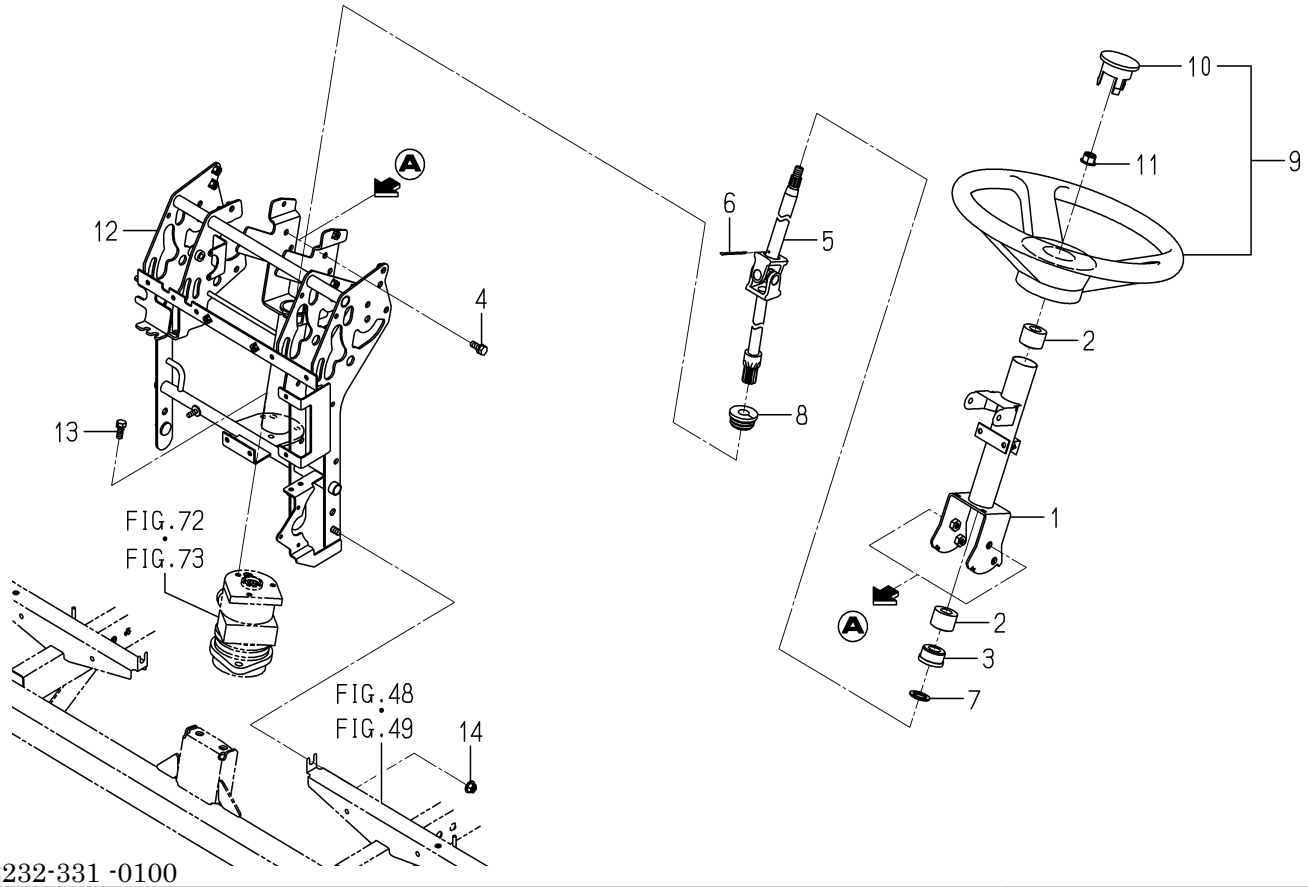

2232-331 -0100

KEY	PART CODE	DESCRIPTION	SPC	TYPE OF MODEL NP60E16		ITC	COL	GRP	REMARKS
1	2232-331-250-20	COLUMN/UPPER/NP COMP	*	1					
2	1426-406-203-00	BUSH,COLUMN	*	2					
3	2144-301-005-10	BUSH/19X35X20	*	1					
4	V211-260-802-00	BOLT/S	*	4					
5	2232-331-240-10	SHAFT/STEERING/NP	*	1					
6	V500-163-004-00	PIN,SPLIT/3 X40	*	1					
7	2130-755-002-00	WASHER,STAND SPRING	*	1					
8	2204-331-008-00	GROMMET/COLUMN	*	1					
9	2232-331-300-00	STEERING/NP ASSY	*	1					
10	2232-331-302-00	CAP	*	1					
11	2188-301-006-00	NUT/U/M12	*	1					
12	2232-331-200-30	COLUMN/LOWER/NP COMP	*	1					
13	V211-260-801-60	BOLT,SEMS (S) M8X16	*	3					
14	V362-260-008-00	NUT/WASHER	*	2					

FIG. 57 PEDAL(BRAKE)SYSTEM

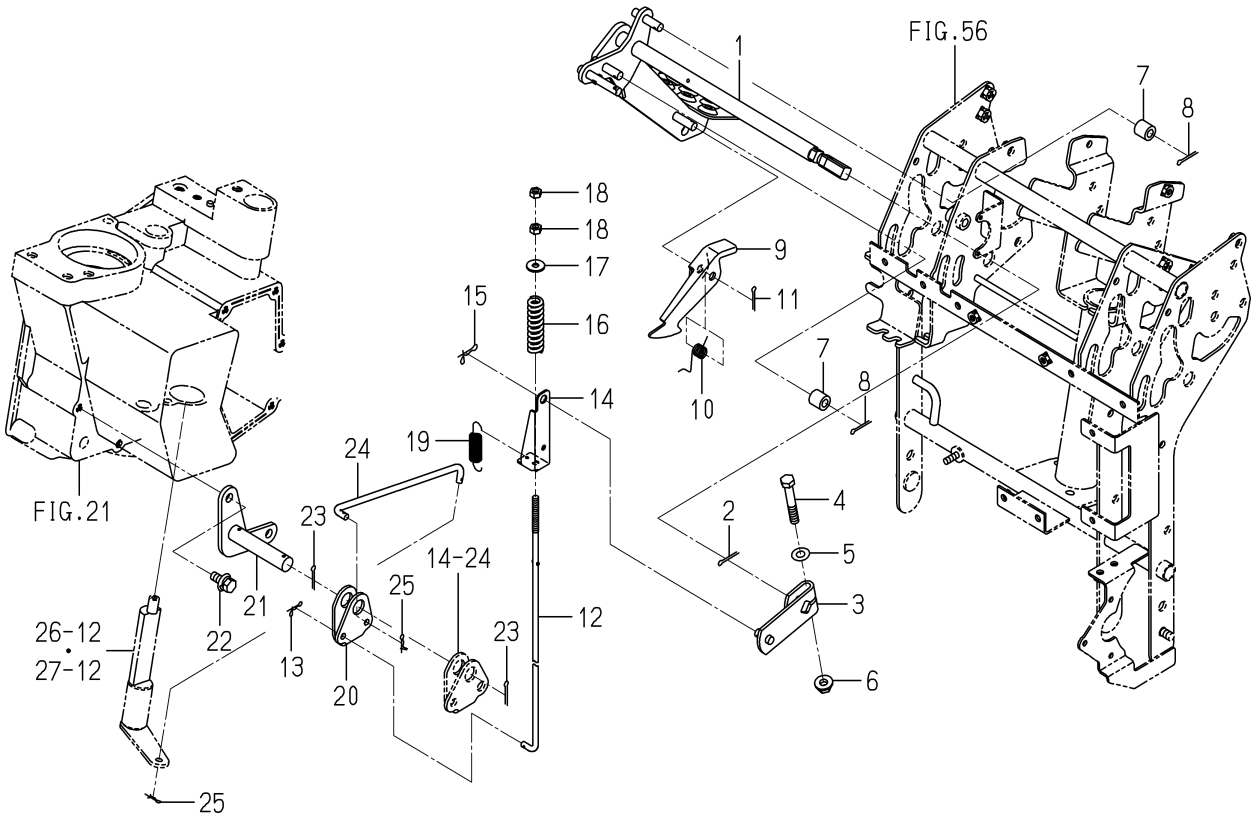

2232-336 -0100

KEY	PART CODE	DESCRIPTION	SPC	TYPE OF MODEL NP60E16		ITC	COL	GRP	REMARKS
1	2232-336-250-20	PEDAL/BRAKE/NP COMP	*	1					
2	V500-163-002-00	PIN,SPLIT/3 X20	*	1					
3	2232-336-260-00	ARM/BRAKE/NP COMP	*	1					
4	V201-260-805-00	BOLT/M 8X50	*	1					
5	V411-260-008-00	WASHER,PL/M 8	*	1					
6	V362-260-008-00	NUT/WASHER	*	1					
7	2204-336-002-00	COLLER/8X15X15	*	2					
8	V500-163-002-00	PIN,SPLIT/3 X20	*	2					
9	2232-336-005-00	LOCK/BRAKE	*	1					
10	2204-336-009-00	SPRING/HT012	*	1					
11	V500-163-002-00	PIN,SPLIT/3 X20	*	1					
12	2232-336-002-00	ROD/BRAKE/UPPER/NP	*	1					
13	2161-735-005-00	PIN	*	1					
14	2204-336-005-00	PLATE/ROD	*	1					
15	2161-735-006-00	PIN	*	1					
16	2171-519-019-10	SPRING/HC058	*	1					
17	3560-503-302-00	WASHER,WIRE TENSION	*	1					
18	V301-260-006-00	NUT/M6	*	2					
19	2209-518-002-10	SPRING/HE070	*	1					
20	2232-336-001-00	PLATE/COUNTER/BRAKE/	*	1					
21	2232-336-200-20	BASE/COUNTER/NP COMP	*	1					
22	V211-360-802-00	BOLT/SP	*	2					
23	V500-163-002-00	PIN,SPLIT/3 X20	*	2					
24	2232-336-003-00	ROD/BRAKE/LOWER/NP	*	1					
25	2161-735-005-00	PIN	*	2					

FIG. 58 BUMPER SYSTEM

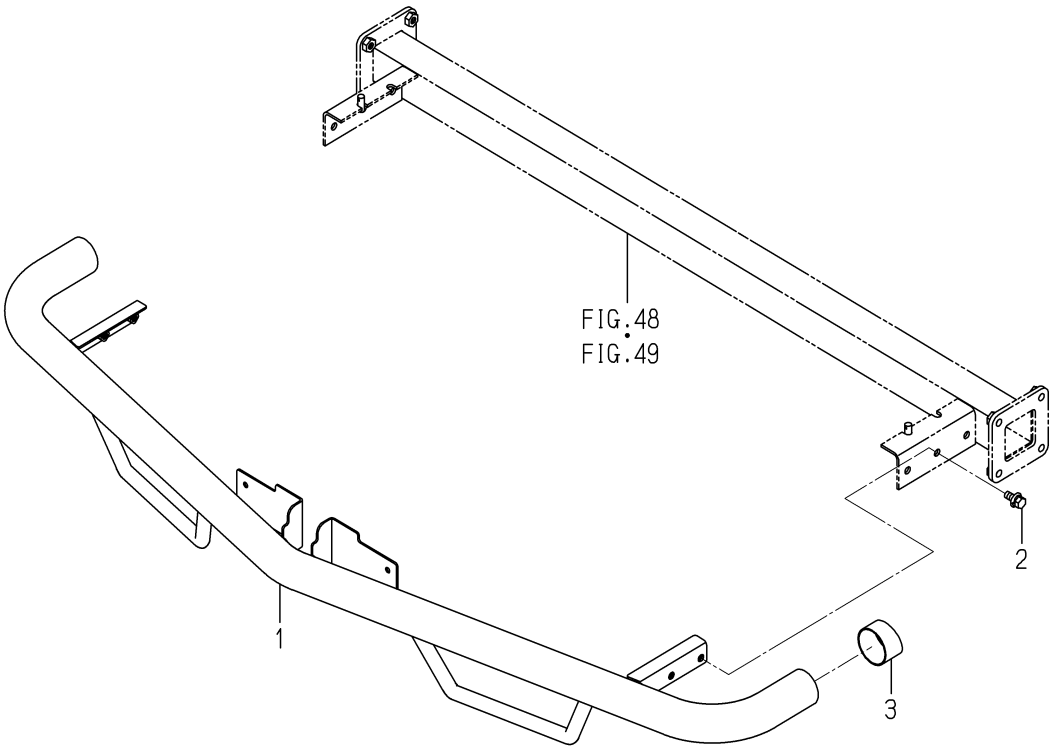

2232-343 -0100

KEY	PART CODE	DESCRIPTION	SPC	TYPE OF MODEL NP60E16		ITC	COL	GRP	REMARKS
1	2232-343-200-20	BUMPER/NP COMP	*	1			5N		
2	V211-360-802-00	BOLT/SP	*	4					
3	2204-343-001-00	CAP/BUMPER	*	2					

FIG. 59 PUMP SYSTEM

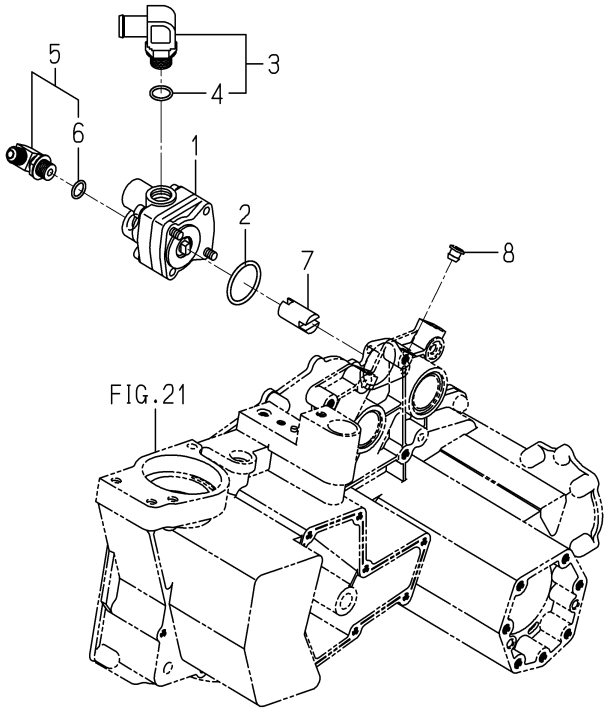

2232-401 -0100

KEY	PART CODE	DESCRIPTION	SPC	TYPE OF MODEL NP60E16		ITC	COL	GRP	REMARKS
1	2204-401-200-00	PUMP/PZ	*	1					
2	V720-103-503-90	O-RING/P39	*	1					
3	2512-501-240-00	ADAPTER/G1/2-L20	*	1					
4	V720-112-401-80	O-RING/P18	*	1					
5	3805-354-280-00	ADAPTOR/G3/8XM16ASSY	*	1					
6	V720-112-401-40	O-RING/P14	*	1					
7	2232-401-001-00	COUPLING/PUMP	*	1					
8	2186-738-038-20	CAP/10	*	1					

FIG. 60 CYLINDER SYSTEM

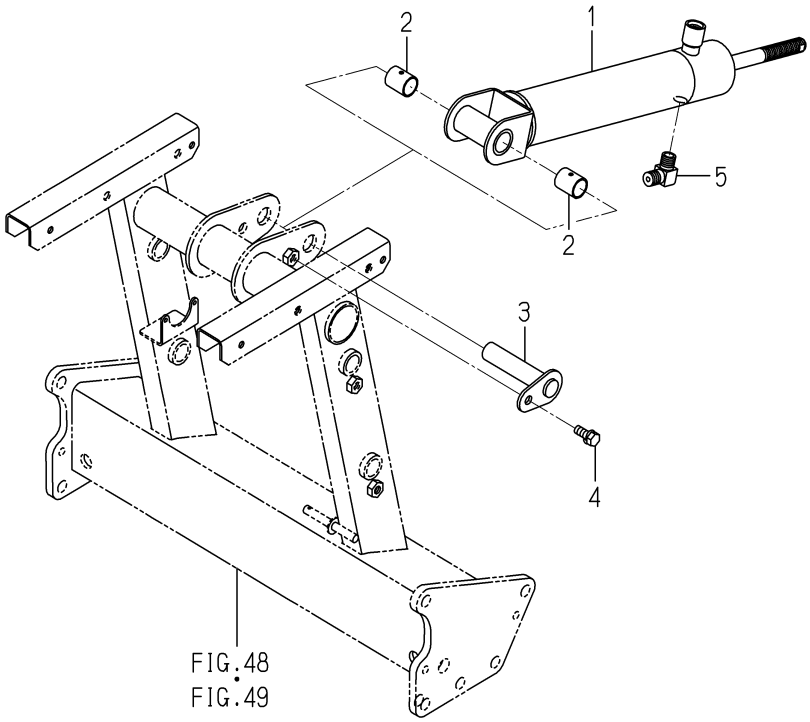

2232-407 -0100

KEY	PART CODE	DESCRIPTION	SPC	TYPE OF MODEL NP60E16		ITC	COL	GRP	REMARKS
1	2232-407-200-20	CYLINDER COMP	*	1					
2	P112-711-201-00	BUSH/18X21X25	*	2					
3	2232-407-210-00	PIN/18X83 COMP	*	1					
4	V211-260-802-00	BOLT/S	*	1					
5	3768-185-022-10	ADAPTER(90ß/PUMP)	*	1					

FIG. 61 PIPING SYSTEM

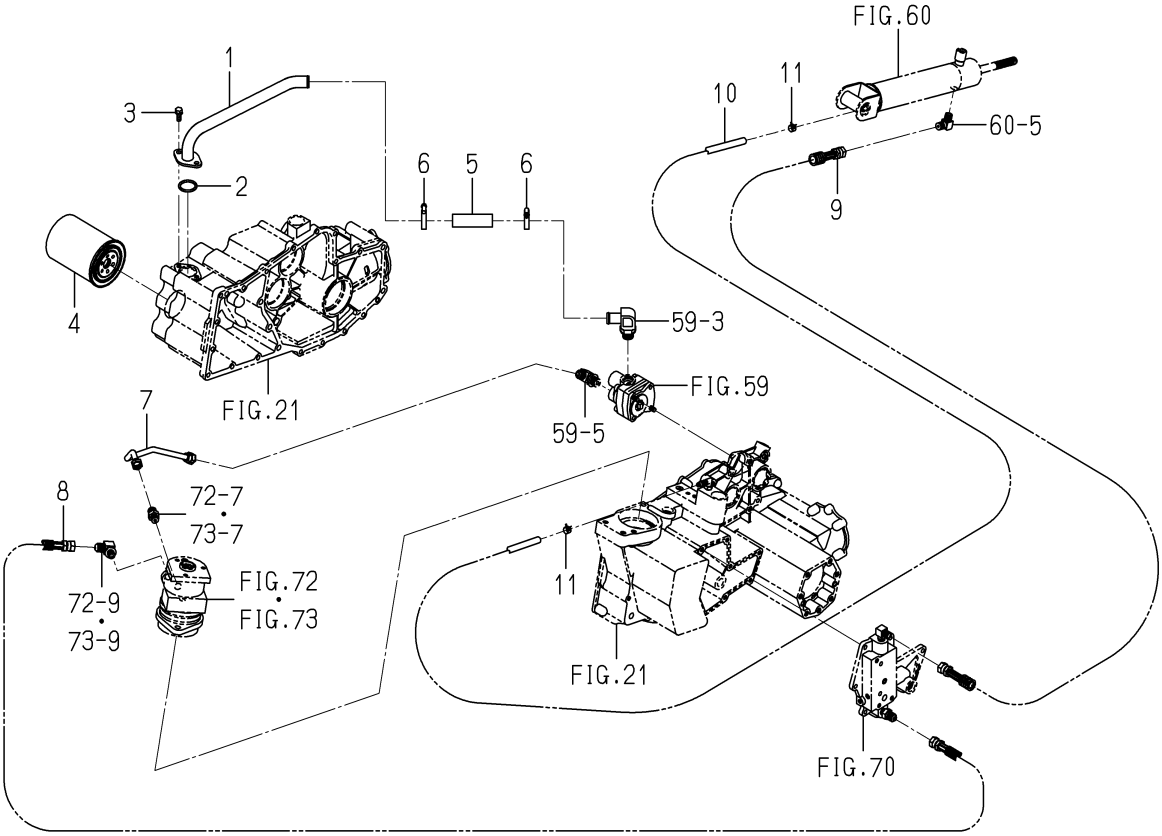

2232-409 -0100

KEY	PART CODE	DESCRIPTION	SPC	TYPE OF MODEL NP60E16		ITC	COL	GRP	REMARKS
1	2232-409-200-00	ADAPTER/SUCTION COMP	*	1					
2	V720-103-503-00	O-RING/P30	*	1					
3	V211-260-802-00	BOLT/S	*	2					
4	2232-409-007-00	CARTRIDGE	*	1					
5	1725-508-001-00	HOSE/19X25X80	*	1					
6	J061-120-032-00	CLAMP/WORM/20-32	*	2					
7	2232-409-001-00	PIPING/PUMP/POWER ST	*	1					
8	3676-374-310-00	HOSE,HYDRAULIC/750 A	*	1					
9	3650-375-200-00	HOSE/HYDRAULIC/2150	*	1					
10	2232-409-004-10	HOSE(8X12X1600)	*	1					
11	J062-119-126-00	CLIP/HOSE/11.9-12.6	*	2					

FIG. 62 ARM(CYLINDER)SYSTEM(G TYPE)

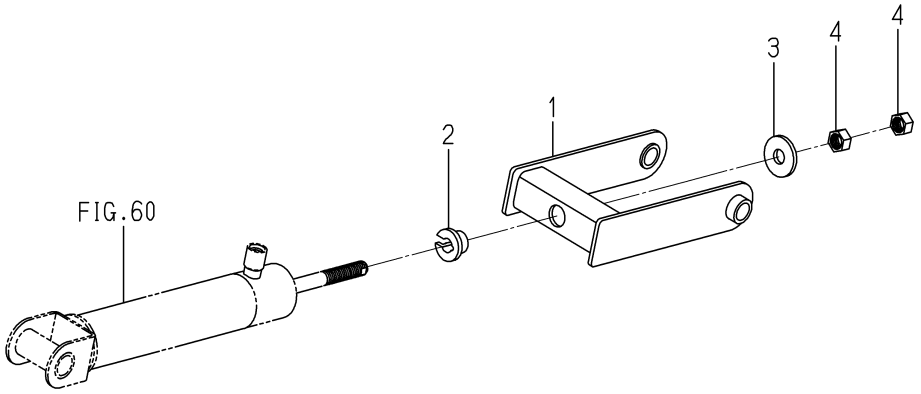

2232-411 -0100

KEY	PART CODE	DESCRIPTION	SPC	TYPE OF MODEL NP60E16		ITC	COL	GRP	REMARKS
1	2232-411-200-00	ARM/CYLINDER COMP	*	1					
2	2204-411-001-00	BUSH	*	1					
3	2232-411-001-00	WASHER/15X40X05	*	1					
4	V304-260-014-00	NUT/M14	*	2					

FIG. 63 ARM(CYLINDER)SYSTEM(D TYPE)

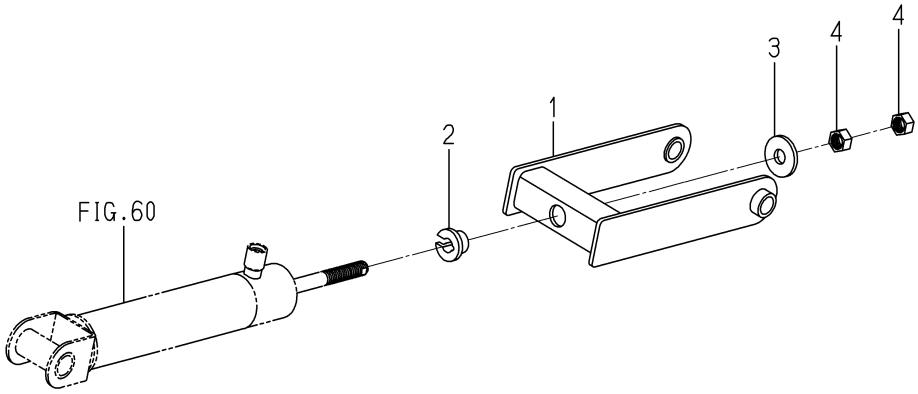

2232-411D-0100

KEY	PART CODE	DESCRIPTION	SPC	TYPE OF MODEL NP60E16		ITC	COL	GRP	REMARKS
1	2232-411-300-00	ARM/CYLINDER/6D COMP	*	1					
2	2204-411-001-00	BUSH	*	1					
3	2232-411-001-00	WASHER/15X40X05	*	1					
4	V304-260-014-00	NUT/M14	*	2					

FIG. 64 ACCUMULATOR SYSTEM

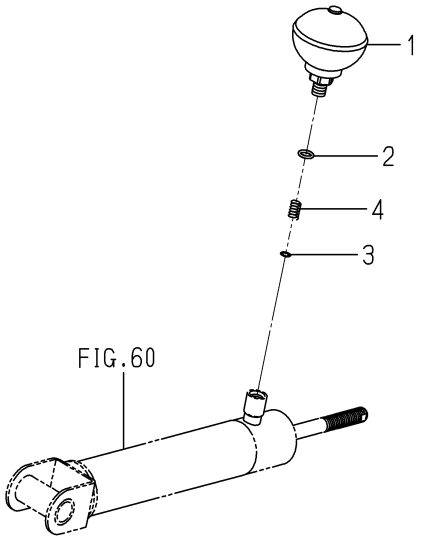

2232-413 -0100

KEY	PART CODE	DESCRIPTION	SPC	TYPE OF MODEL NP60E16		ITC	COL	GRP	REMARKS
1	2232-413-300-00	ACCUMULATOR ASSY	*	1					
2	V720-112-401-10	O-RING/P11	*	1					
3	2213-413-001-10	WASHER/09X11X1.6	*	1					
4	K270-012-103-00	SPRING/HC017	*	1					

FIG. 65 LINK(LOWER)SYSTEM(G TYPE)

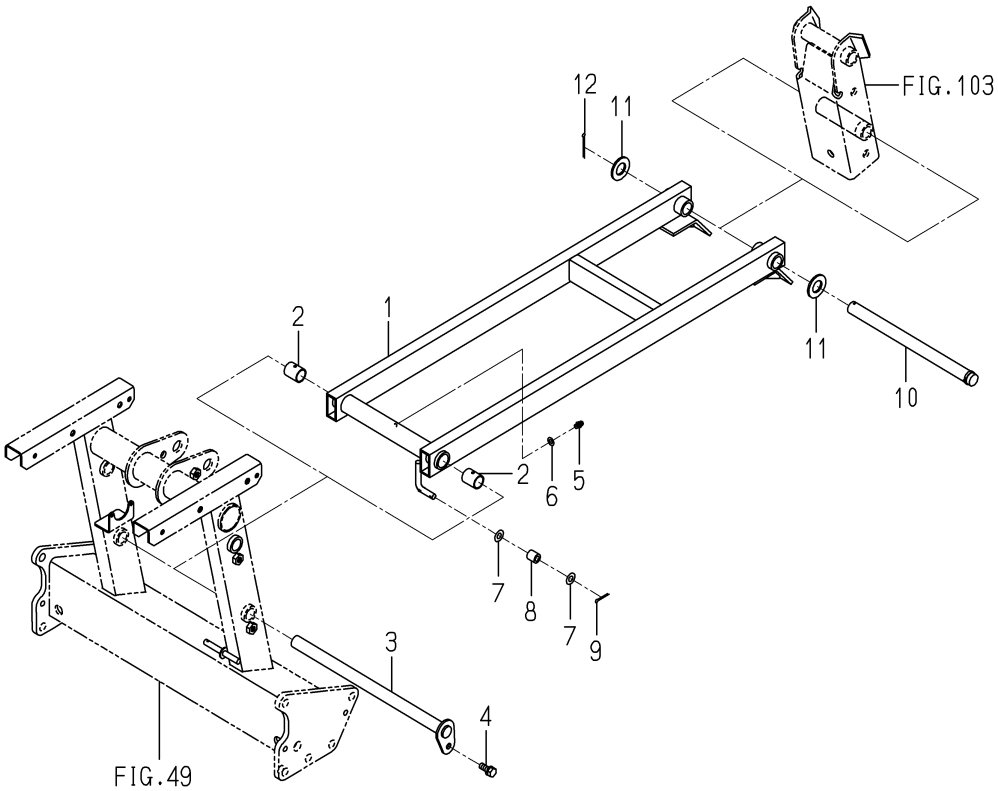

2232-414 -0100

KEY	PART CODE	DESCRIPTION	SPC	TYPE OF MODEL NP60E16		ITC	COL	GRP	REMARKS
1	2232-414-200-20	LINK/LOWER COMP	*	1					
2	P112-711-201-00	BUSH/18X21X25	*	2					
3	2232-414-210-00	PIN/18X315 COMP	*	1					
4	V211-260-802-00	BOLT/S	*	1					
5	V760-150-000-00	NIPPLE,GREASE	*	1					
6	V411-260-006-00	WASHER / M6	*	1					
7	V411-260-008-00	WASHER,PL/M 8	*	2					
8	2186-533-002-00	ROLLER	*	1					
9	V500-163-002-00	PIN,SPLIT/3 X20	*	1					
10	2232-415-001-00	PIN/18X247	*	1					
11	V411-260-018-00	WASHER,PL/M18	*	2					
12	V500-163-003-50	PIN,SPLIT/3 X35	*	1					

FIG. 66 LINK(LOWER)SYSTEM(D TYPE)

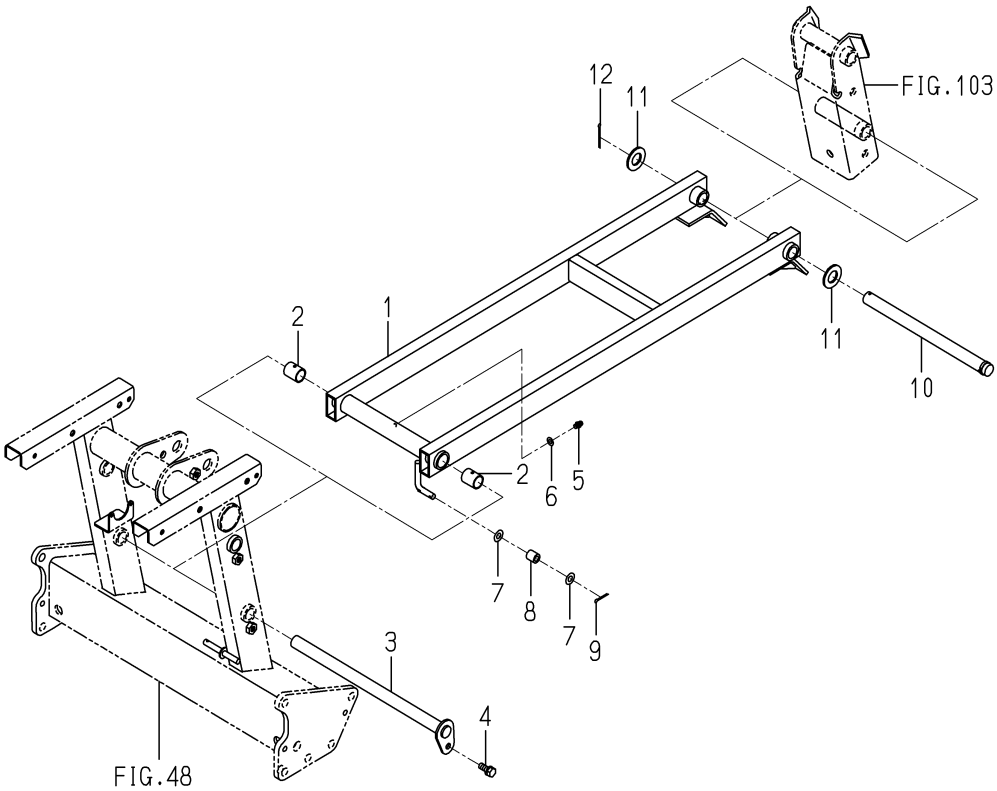

2232-414D-0100

KEY	PART CODE	DESCRIPTION	SPC	TYPE OF MODEL NP60E16		ITC	COL	GRP	REMARKS
1	2232-414-300-00	LINK/LOWER/6D COMP	*	1					
2	P112-711-201-00	BUSH/18X21X25	*	2					
3	2232-414-210-00	PIN/18X315 COMP	*	1					
4	V211-260-802-00	BOLT/S	*	1					
5	V760-150-000-00	NIPPLE,GREASE	*	1					
6	V411-260-006-00	WASHER / M6	*	1					
7	V411-260-008-00	WASHER,PL/M 8	*	2					
8	2186-533-002-00	ROLLER	*	1					
9	V500-163-002-00	PIN,SPLIT/3 X20	*	1					
10	2232-415-001-00	PIN/18X247	*	1					
11	V411-260-018-00	WASHER,PL/M18	*	2					
12	V500-163-003-50	PIN,SPLIT/3 X35	*	1					

FIG. 67 LINK(UPPER)SYSTEM(G TYPE)

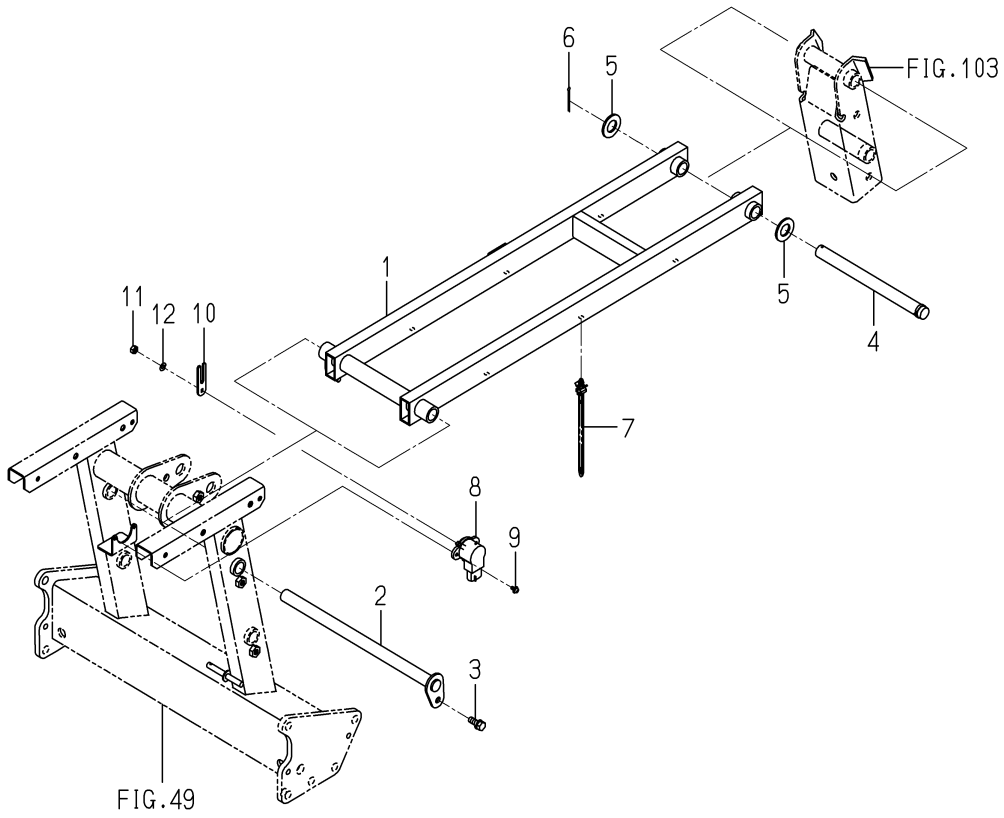

2232-415 -0100

KEY	PART CODE	DESCRIPTION	SPC	TYPE OF MODEL NP60E16		ITC	COL	GRP	REMARKS
1	2232-415-200-00	LINK/UPPER COMP	*	1					
2	2232-414-210-00	PIN/18X315 COMP	*	1					
3	V211-260-802-00	BOLT/S	*	1					
4	2232-415-002-00	PIN/18X211	*	1					
5	V411-260-018-00	WASHER,PL/M18	*	2					
6	V500-163-003-50	PIN,SPLIT/3 X35	*	1					
7	2204-537-002-00	BAND	*	6					
8	1729-662-340-00	SENSOR/ANGLE/110/R	*	1					
9	V120-364-001-00	SCREW/SP	*	2					
10	2232-415-003-10	SENSORARM/LINK	*	1					
11	V301-260-006-00	NUT/M6	*	1					
12	V401-160-006-00	WASHER,SP/M 6	*	1					

FIG. 68 LINK(UPPER)SYSTEM(D TYPE)

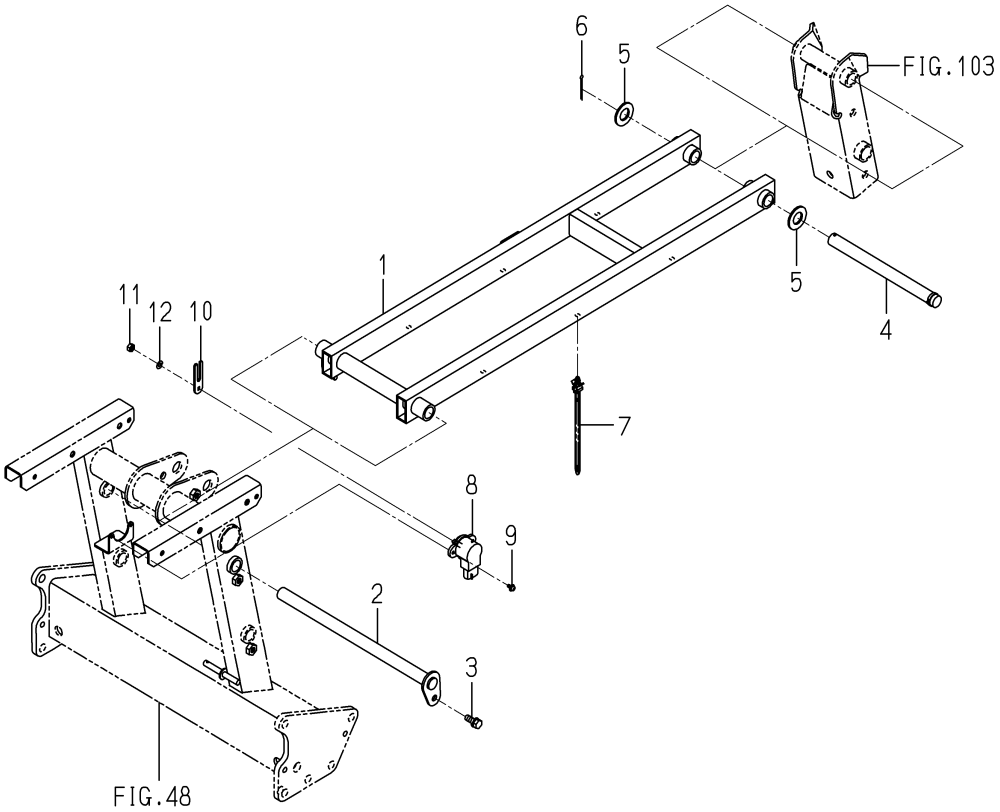

2232-415D-0100

KEY	PART CODE	DESCRIPTION	SPC	TYPE OF MODEL NP60E16		ITC	COL	GRP	REMARKS
1	2232-415-300-00	LINK/UPPER/6D COMP	*	1					
2	2232-414-210-00	PIN/18X315 COMP	*	1					
3	V211-260-802-00	BOLT/S	*	1					
4	2232-415-002-00	PIN/18X211	*	1					
5	V411-260-018-00	WASHER,PL/M18	*	2					
6	V500-163-003-50	PIN,SPLIT/3 X35	*	1					
7	2204-537-002-00	BAND	*	6					
8	1729-662-340-00	SENSOR/ANGLE/110/R	*	1					
9	V120-364-001-00	SCREW/SP	*	2					
10	2232-415-003-10	SENSORARM/LINK	*	1					
11	V301-260-006-00	NUT/M6	*	1					
12	V401-160-006-00	WASHER,SP/M 6	*	1					

FIG. 69 CLUTCH(PLANTING)SYSTEM

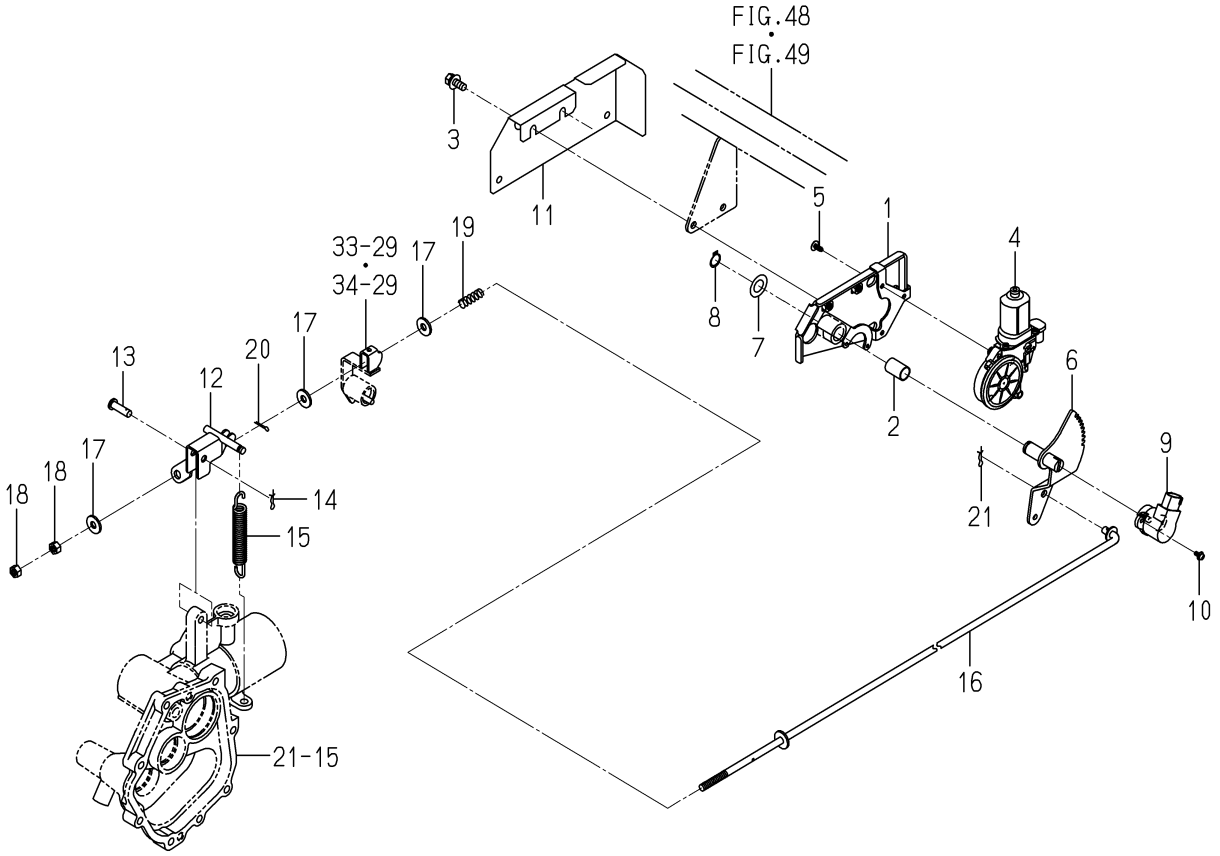

2232-422 -0100

KEY	PART CODE	DESCRIPTION	SPC	TYPE OF MODEL NP60E16		ITC	COL	GRP	REMARKS
1	2232-422-200-10	BASE/MOTOR/PLANTING	*	1					
2	2232-583-005-00	BUSH/15X17X25	*	1					
3	V211-360-802-00	BOLT/SP	*	2					
4	3888-726-200-00	MOTOR/LH ASSY	*	1					
5	3888-726-001-00	TAPPINGSCREW/M5X12	*	3					
6	2232-422-210-00	GEAR/CLUTCH/PLANTING	*	1					
7	3747-342-002-00	WASHER	*	1					
8	V704-140-015-00	RING,SNAP/15 C	*	1					
9	1729-662-330-00	SENSOR/ANGLE/75 ASSY	*	1					
10	V120-364-001-00	SCREW/SP	*	2					
11	2232-422-001-10	COVER/MOTOR/PLANTING	*	1					
12	2232-422-230-10	ARM/CLUTCH/PLANTING	*	1					
13	2186-336-003-00	PIN/08X27	*	1					
14	2161-735-006-00	PIN	*	1					
15	2232-422-031-00	SPRING/HE114	*	1					
16	2232-422-270-10	ROD/PLANTING CLUTCH/	*	1					
17	4106-102-028-00	WASHER	*	3					
18	V304-260-008-00	NUT	*	2					
19	2232-422-002-00	SPRING/HC032	*	1					
20	V500-163-001-50	PIN,SPLIT/3 X15	*	1					
21	V500-163-002-00	PIN,SPLIT/3 X20	*	1					

FIG. 70 VALVE SYSTEM(D TYPE)

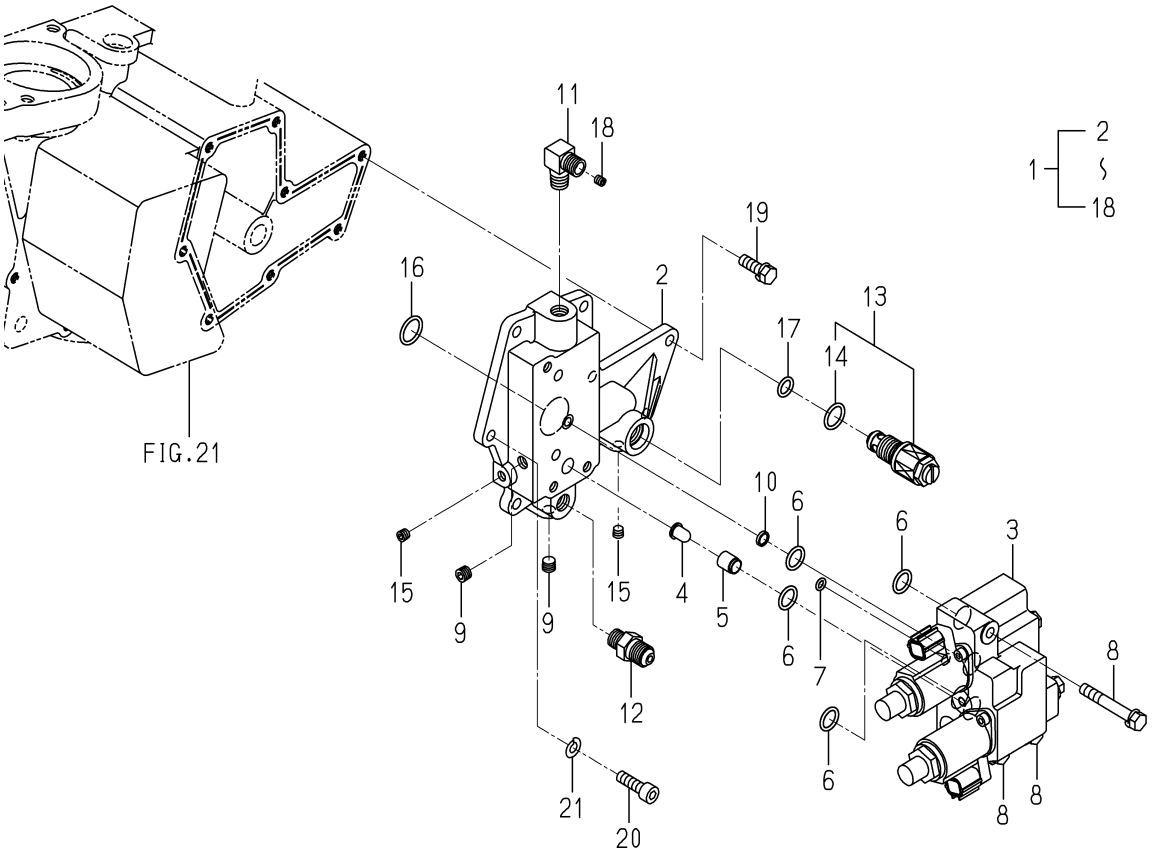

2232-435 -0100

KEY	PART CODE	DESCRIPTION	SPC	TYPE OF MODEL NP60E16		ITC	COL	GRP	REMARKS
1	2232-435-200-10	VALVE/KTMS6 SET	*	1					
2	K200-269-000-00	VALVE/PFV/15ASSY	*	1					
3	2232-435-001-00	METAL/RELIEF/KTMS6	*	1					
4	1675-503-001-00	FILTER/LINE/09X12X15	*	1					
5	2232-435-003-00	COLLAR/10X12X14	*	1					
6	V720-112-401-40	O-RING/P14	*	4					
7	V720-111-900-60	O-RING P6 HS90	*	1					
8	V211-260-805-50	BOLT/(S)M8X55	*	3					
9	V780-140-000-2T	PLUG/SCREW/SEAL	*	2					
10	1757-509-012-00	FILTER/PORT/11	*	1					
11	2232-435-004-00	ADAPTER/L/ORIFICE	*	1					
12	1716-510-004-00	ADAPTER/RC1/4	*	1					
13	K250-083-000-00	VALVE/RELIEF/08 ASSY	*	1					
14	V720-112-401-60	O-RING/P16	*	1					
15	V780-140-000-1T	PLUG/SCREW/SEAL	*	2					
16	V720-112-401-80	O-RING/P18	*	1					
17	V720-112-401-10	O-RING/P11	*	1					
18	V783-160-602-00	ORIFICESETS/M6X2.0	*	1					
19	V211-260-802-50	BOLT/S	*	7					
20	V220-540-802-50	SCREW/SOCKET	*	1					
21	V401-160-008-00	WASHER,SP/M 8	*	1					

FIG. 71 VALVE SYSTEM(G TYPE)

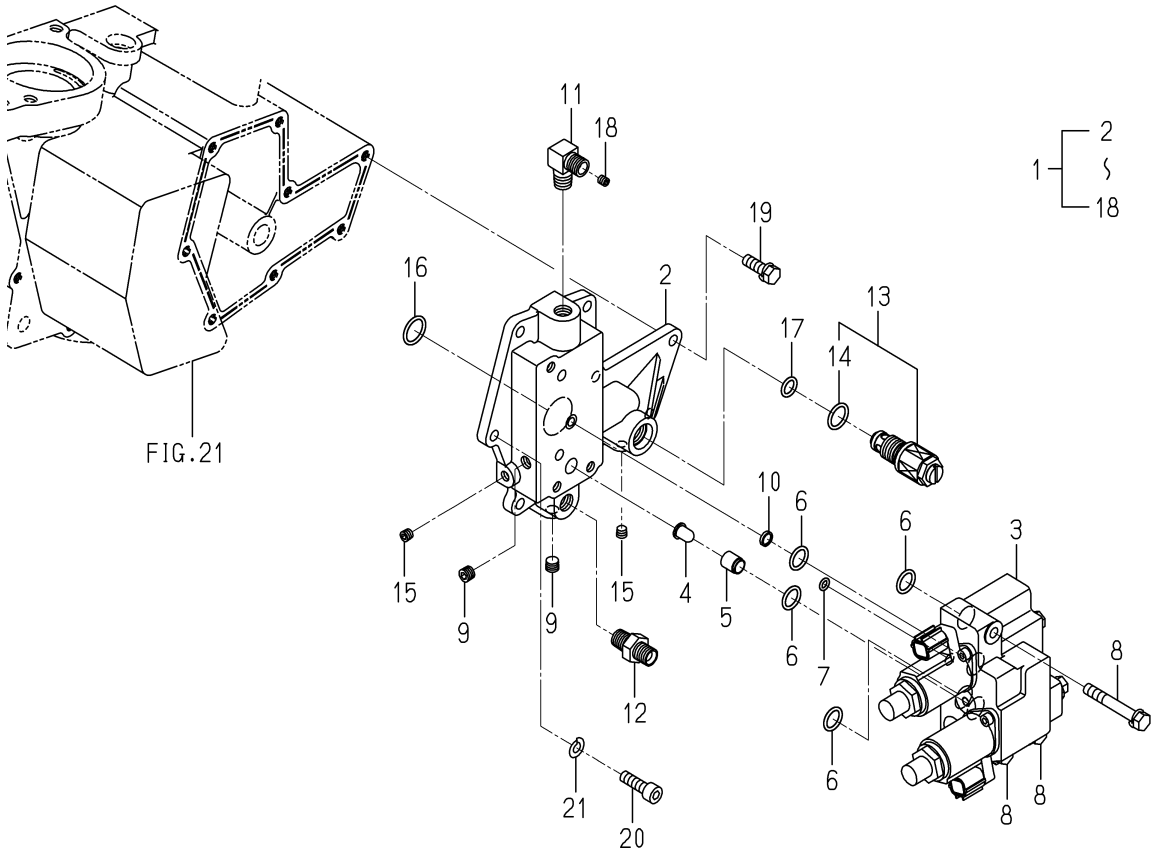

2233-435 -0100

KEY	PART CODE	DESCRIPTION	SPC	TYPE OF MODEL NP60E16		ITC	COL	GRP	REMARKS
1	2233-435-200-00	VALVE/KTMS6/8 SET	*	1					
2	K200-269-000-00	VALVE/PFV/15ASSY	*	1					
3	2232-435-001-00	METAL/RELIEF/KTMS6	*	1					
4	1675-503-001-00	FILTER/LINE/09X12X15	*	1					
5	2232-435-003-00	COLLAR/10X12X14	*	1					
6	V720-112-401-40	O-RING/P14	*	4					
7	V720-111-900-60	O-RING P6 HS90	*	1					
8	V211-260-805-50	BOLT/(S)M8X55	*	3					
9	V780-140-000-2T	PLUG/SCREW/SEAL	*	2					
10	1757-509-012-00	FILTER/PORT/11	*	1					
11	2232-435-004-00	ADAPTER/L/ORIFICE	*	1					
12	3768-185-014-10	ADAPTER,STRAIGHT	*	1					
13	K250-083-000-00	VALVE/RELIEF/08 ASSY	*	1					
14	V720-112-401-60	O-RING/P16	*	1					
15	V780-140-000-1T	PLUG/SCREW/SEAL	*	2					
16	V720-112-401-80	O-RING/P18	*	1					
17	V720-112-401-10	O-RING/P11	*	1					
18	V783-160-602-00	ORIFICESETS/M6X2.0	*	1					
19	V211-260-802-50	BOLT/S	*	7					
20	V220-540-802-50	SCREW/SOCKET	*	1					
21	V401-160-008-00	WASHER,SP/M 8	*	1					

FIG. 72 POWER ASSIST(STEERING)SYSTEM(D TYPE)

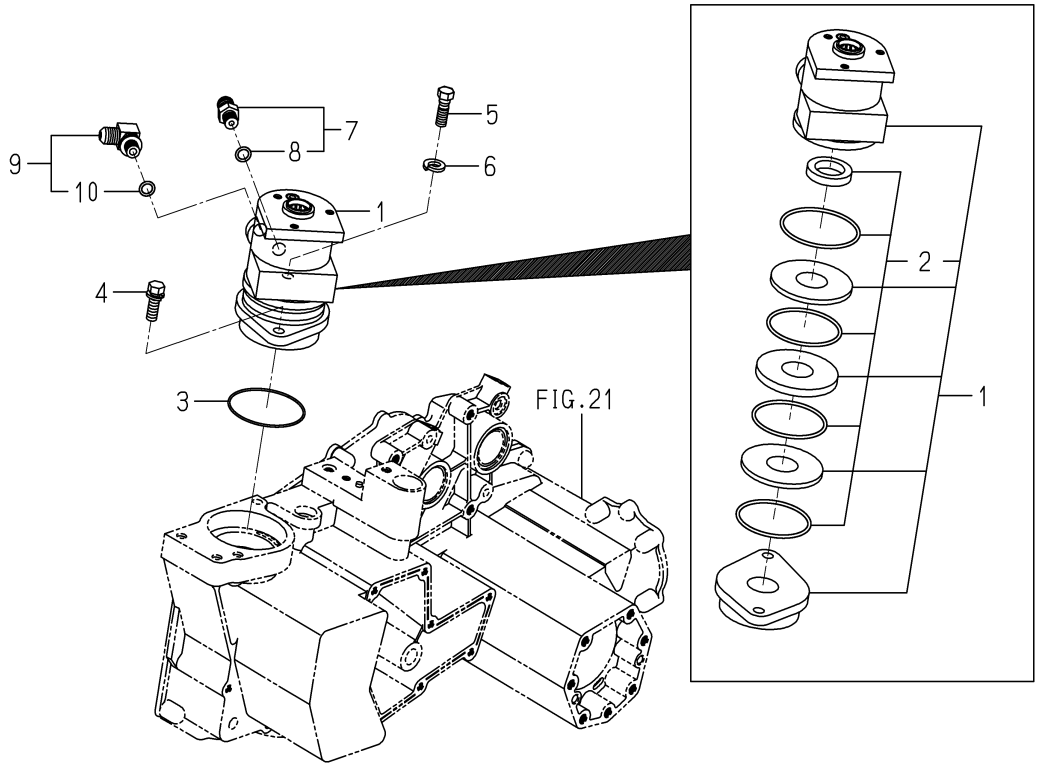

2213-440 -0100

KEY	PART CODE	DESCRIPTION	SPC	TYPE OF MODEL NP60E16		ITC	COL	GRP	REMARKS
1	2204-440-300-10	TORQUEGENERATOR	*	1					
2	2204-440-310-00	KIT/SEAL ASSY	*	1					
3	2194-301-009-00	O-RING	*	1					
4	V211-261-003-00	BOLT(S) M10X30	*	1					
5	2204-440-001-20	BOLT/M10X30	*	1					
6	V401-160-012-00	WASHER,SP/M12	*	1					
7	1650-509-280-00	ADAPTER/PF1/4 ASSY	*	1					
8	V720-112-401-10	O-RING/P11	*	1					
9	1656-509-310-10	ADAPTER/L/PF1/4 ASSY	*	1					
10	V720-112-401-10	O-RING/P11	*	1					

FIG. 73 POWER ASSIST(STEERING)SYSTEM(G TYPE)

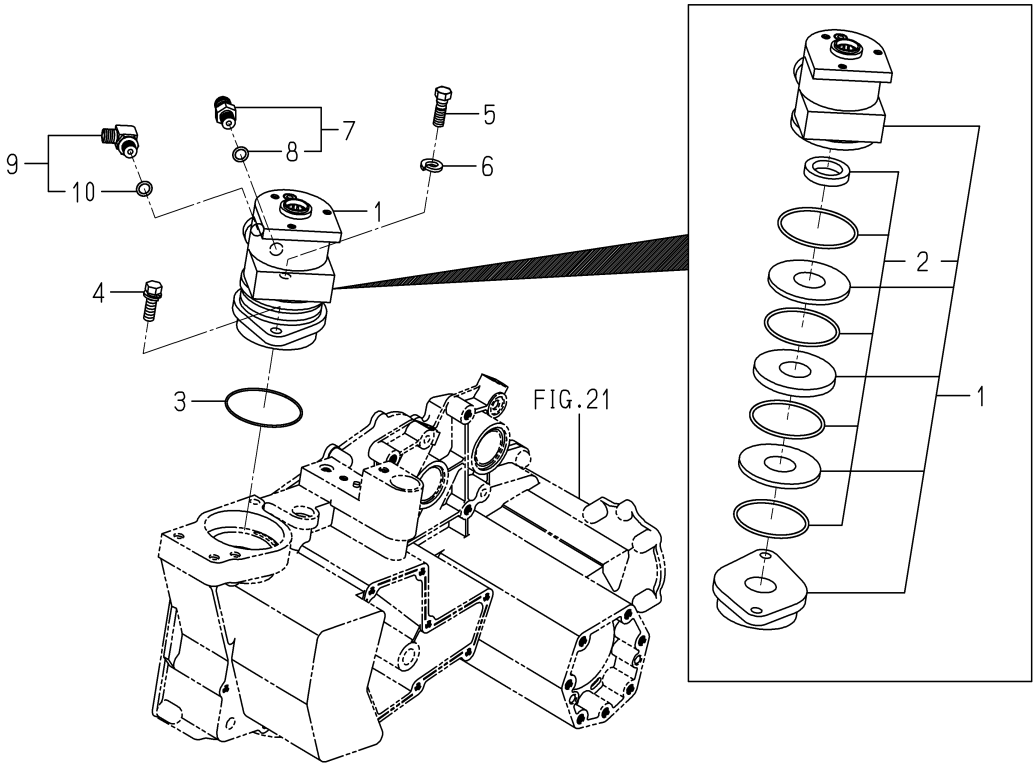

2233-440 -0100

KEY	PART CODE	DESCRIPTION	SPC	TYPE OF MODEL NP60E16		ITC	COL	GRP	REMARKS
1	2204-440-300-10	TORQUEGENERATOR	*	1					
2	2204-440-310-00	KIT/SEAL ASSY	*	1					
3	2194-301-009-00	O-RING	*	1					
4	V211-261-003-00	BOLT(S) M10X30	*	1					
5	2204-440-001-20	BOLT/M10X30	*	1					
6	V401-160-012-00	WASHER,SP/M12	*	1					
7	1650-509-280-00	ADAPTER/PF1/4 ASSY	*	1					
8	V720-112-401-10	O-RING/P11	*	1					
9	1705-408-230-00	ADAPTER/L/G1/4 ASSY	*	1					
10	V720-112-401-10	O-RING/P11	*	1					

FIG. 74 HOOD SYSTEM

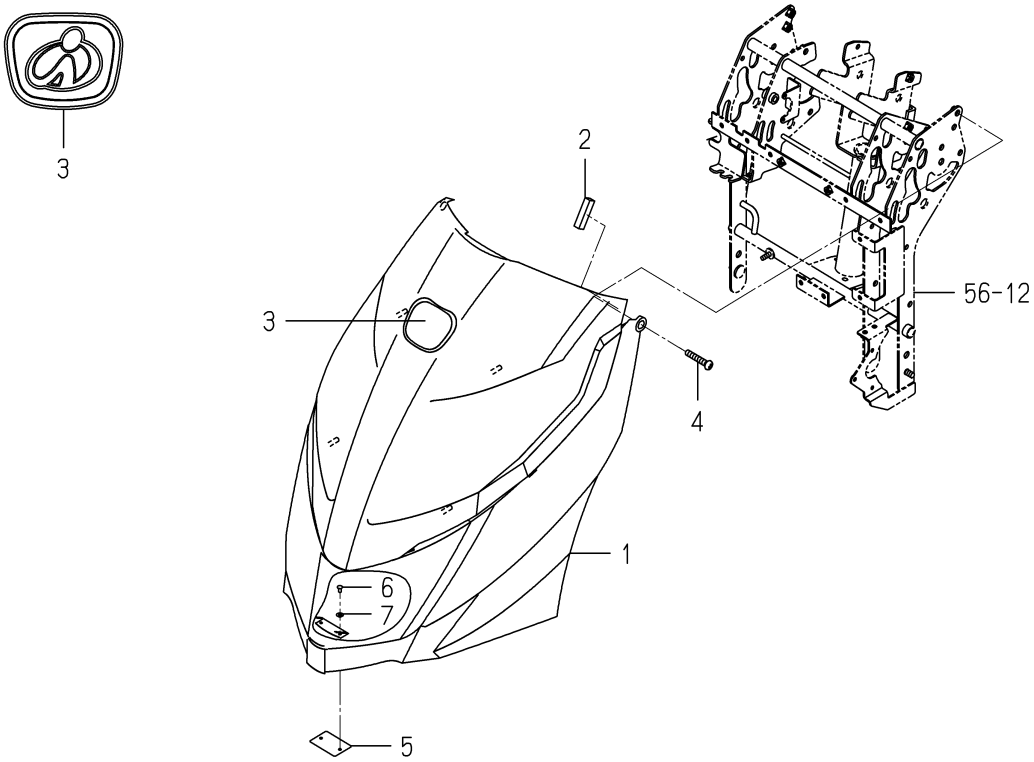

2232-501 -0100

KEY	PART CODE	DESCRIPTION	SPC	TYPE OF MODEL NP60E16		ITC	COL	GRP	REMARKS
1	2232-501-200-40	HOOD/NP ASSY	*	1					
2	2232-501-032-00	CUSHION/HOOD	*	2					
3	3533-901-012-00	ORNAMENT/ISEKI	*	1					
4	2232-501-003-00	SCREW/TRUSS/M8X40	*	2					
5	2232-501-004-10	PLATE/MAGNET/NP	*	1					
6	W296-134-008-60	RIVET/BLIND/STEEL/4X	*	2					
7	V411-260-004-00	WASHER,PL/M 4	*	2					

FIG. 75 HOOD(REAR)SYSTEM

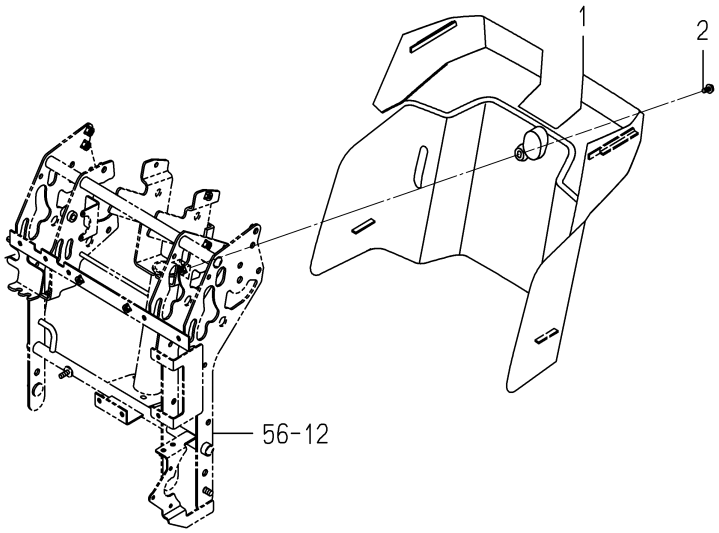

2232-507 -0100

KEY	PART CODE	DESCRIPTION	SPC	TYPE OF MODEL NP60E16		ITC	COL	GRP	REMARKS
1	2232-507-001-00	HOOD/REAR/NP	*	1					
2	V120-366-001-60	SCREW	*	1					

FIG. 76 STEP(MAIN)SYSTEM(G TYPE)

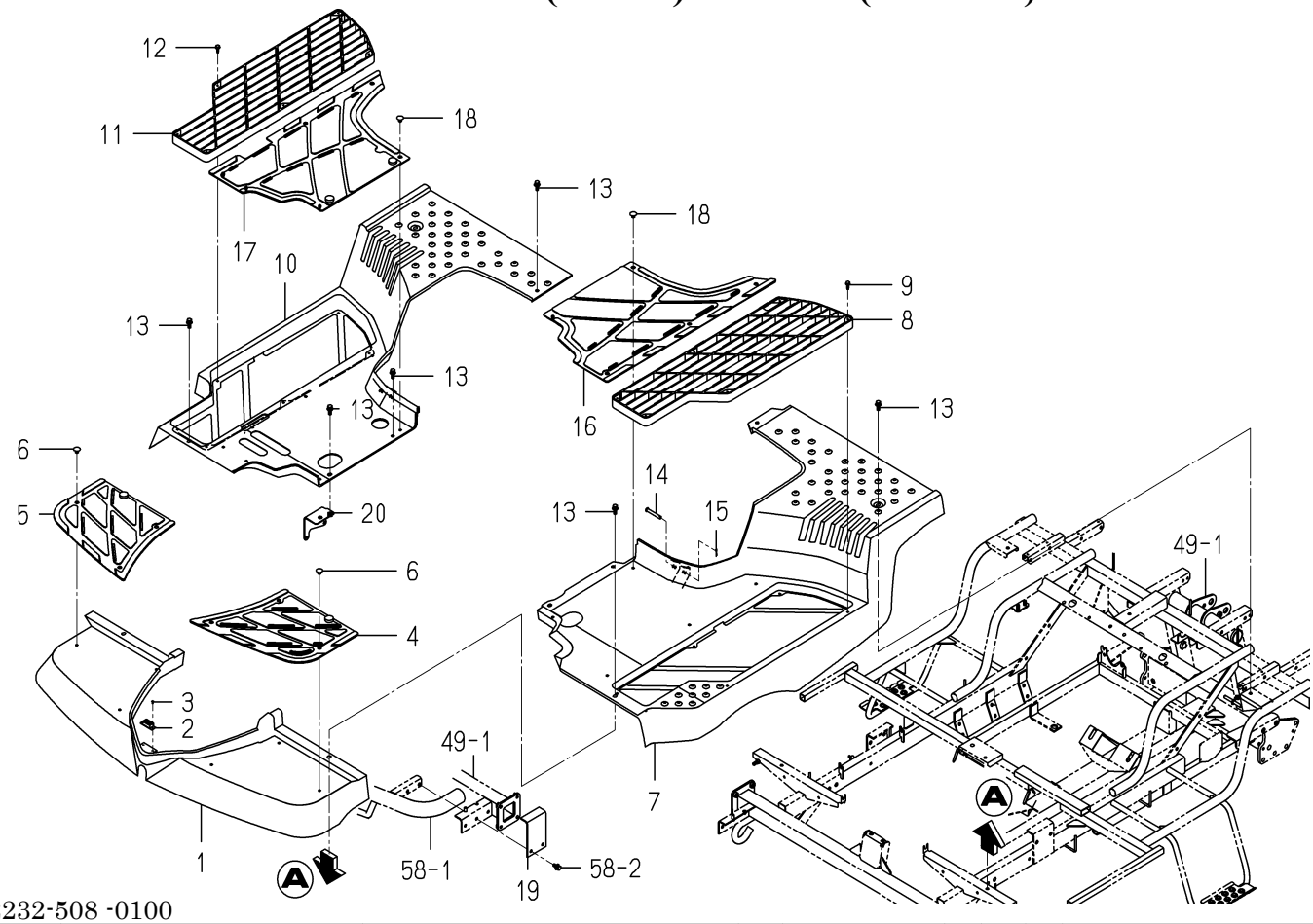

2232-508 -0100

KEY	PART CODE	DESCRIPTION	SPC	TYPE OF MODEL NP60E16		ITC	COL	GRP	REMARKS
1	2232-508-001-10	STEP/FRONT/NP	*	1					
2	2204-501-005-00	HOOD/MAGNET	*	1					
3	3885-741-235-00	RIVET/BLIND/STEEL/3.	*	2					
4	2232-508-011-00	MAT/FRONT/LH/NP	*	1					
5	2232-508-012-00	MAT/FRONT/RH/NP	*	1					
6	2186-508-009-00	CLIP,STEP MAT	*	6					
7	2232-508-006-20	STEP/CENTER/LH/NP	*	1					
8	2232-508-003-00	STEP/SEETHROUGH/NP	*	1					
9	2213-508-004-00	TAPBOLT/6X20	*	6					
10	2232-508-007-20	STEP/CENTER/RH/NP	*	1					
11	2232-508-003-00	STEP/SEETHROUGH/NP	*	1					
12	2213-508-004-00	TAPBOLT/6X20	*	6					
13	2204-508-052-00	BOLT/SP/M8X25/SUS FA	*	7					
14	1329-106-002-00	PIN,STAND	*	2					
15	3908-170-020-00	PIN/SNAP/08	*	2					
16	2232-508-013-00	MAT/CENTER/LH/NP	*	1					
17	2232-508-014-00	MAT/CENTER/RH/NP	*	1					
18	2186-508-009-00	CLIP,STEP MAT	*	7					
19	2232-508-021-00	PLATE/STAY/STEP/FRON	*	2					
20	2232-508-280-00	PLATE/STEP/CENTER	*	1					

FIG. 77 STEP(MAIN)SYSTEM(D TYPE)

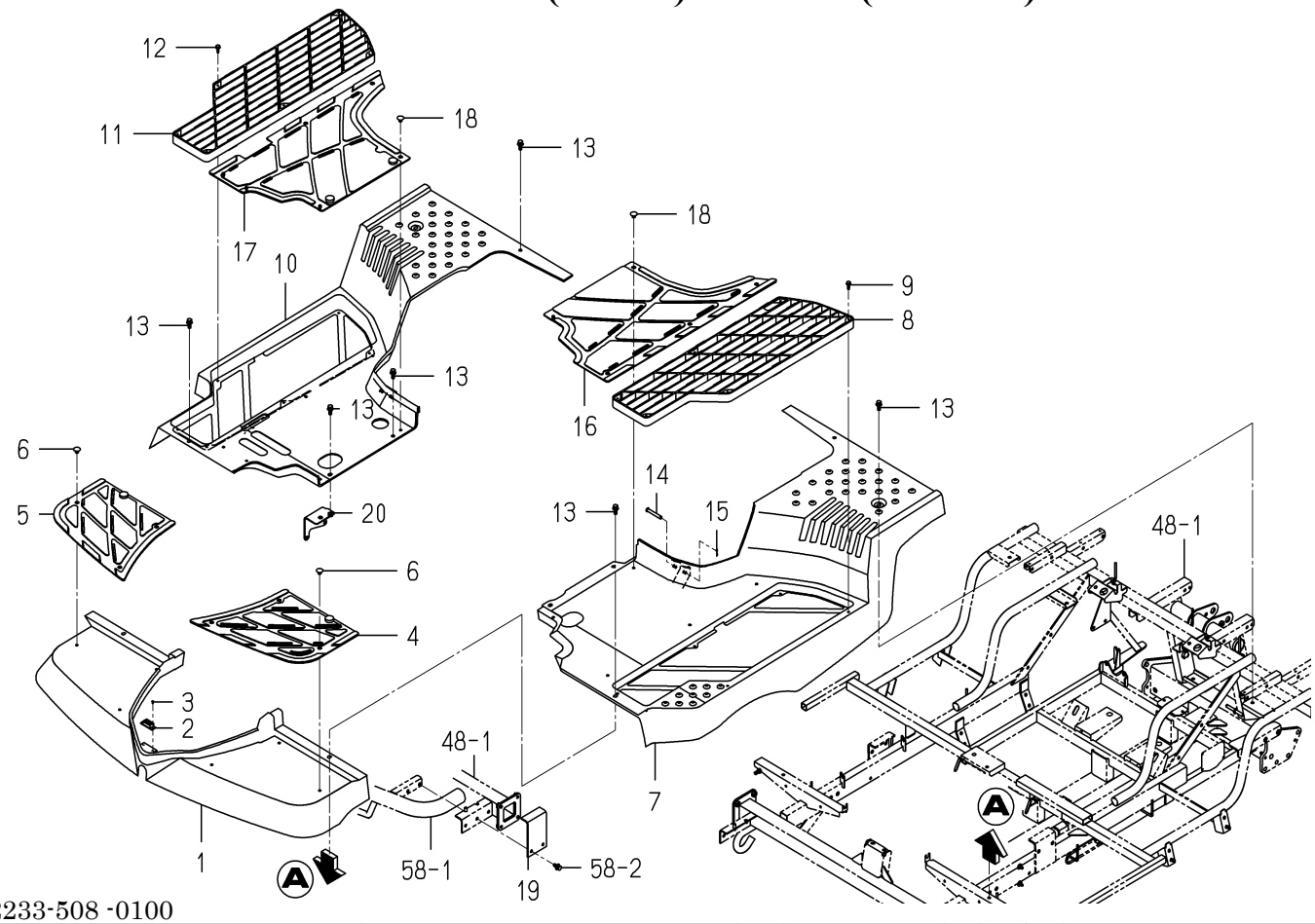

2233-508 -0100

KEY	PART CODE	DESCRIPTION	SPC	TYPE OF MODEL NP60E16		ITC	COL	GRP	REMARKS
1	2232-508-001-10	STEP/FRONT/NP	*	1					
2	2204-501-005-00	HOOD/MAGNET	*	1					
3	3885-741-235-00	RIVET/BLIND/STEEL/3.	*	2					
4	2232-508-011-00	MAT/FRONT/LH/NP	*	1					
5	2232-508-012-00	MAT/FRONT/RH/NP	*	1					
6	2186-508-009-00	CLIP,STEP MAT	*	6					
7	2233-508-001-00	STEP/CENTER/LH/D/NP	*	1					
8	2232-508-003-00	STEP/SEETHROUGH/NP	*	1					
9	2213-508-004-00	TAPBOLT/6X20	*	6					
10	2233-508-002-00	STEP/CENTER/RH/D/NP	*	1					
11	2232-508-003-00	STEP/SEETHROUGH/NP	*	1					
12	2213-508-004-00	TAPBOLT/6X20	*	6					
13	2204-508-052-00	BOLT/SP/M8X25/SUS FA	*	8					
14	1329-106-002-00	PIN,STAND	*	2					
15	3908-170-020-00	PIN/SNAP/08	*	2					
16	2232-508-013-00	MAT/CENTER/LH/NP	*	1					
17	2232-508-014-00	MAT/CENTER/RH/NP	*	1					
18	2186-508-009-00	CLIP,STEP MAT	*	7					
19	2232-508-021-00	PLATE/STAY/STEP/FRON	*	2					
20	2232-508-280-00	PLATE/STEP/CENTER	*	1					

FIG. 78 STEP(SIDE)SYSTEM(D TYPE)

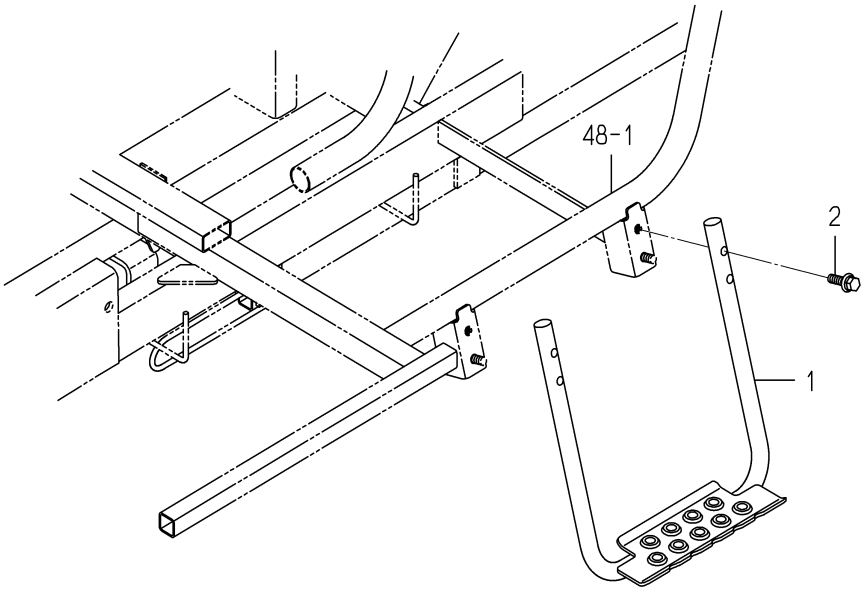

2233-509B-0100

KEY	PART CODE	DESCRIPTION	SPC	TYPE OF MODEL NP60E16		ITC	COL	GRP	REMARKS
1	2233-509-280-00	STEP/ASSIST/NP COMP	*	2					
2	V211-360-803-00	BOLT/SP	*	4					

FIG. 79 COVER(ENGINE)SYSTEM(G TYPE)

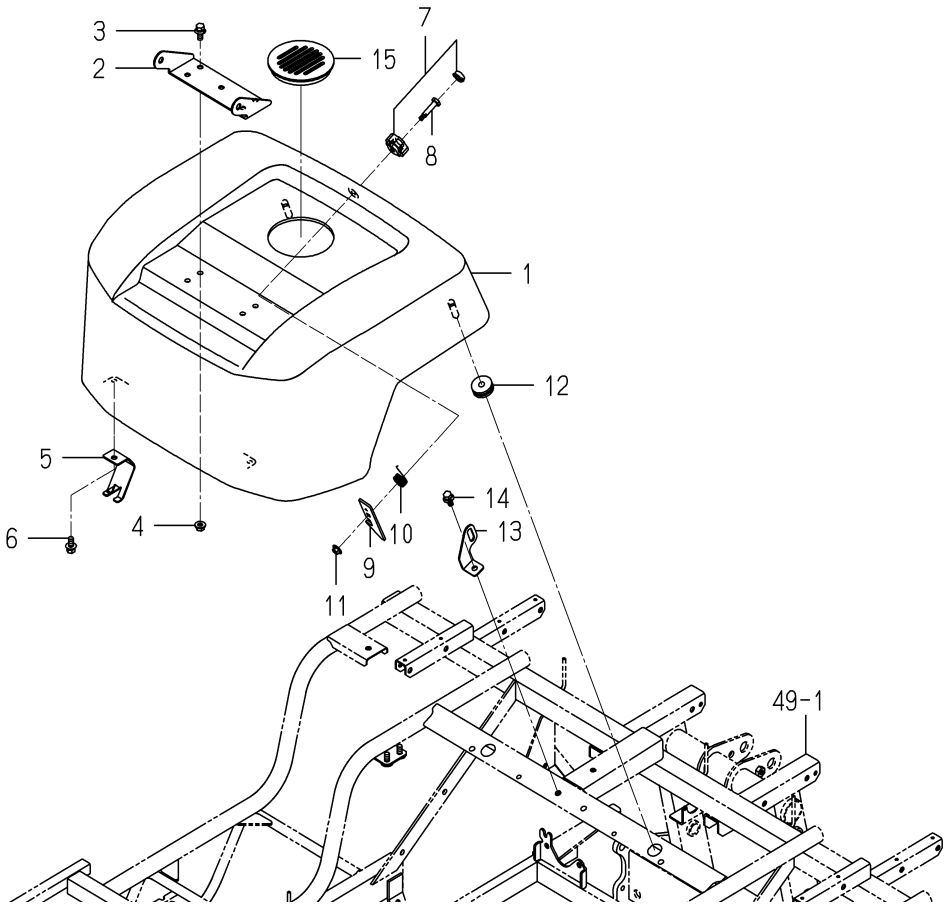

2232-512 -0100

KEY	PART CODE	DESCRIPTION	SPC	TYPE OF MODEL NP60E16		ITC	COL	GRP	REMARKS
1	2232-512-001-10	COVER/ENGINE/NP	*	1					
2	2213-512-003-10	BRACKET/SEAT/PZ/8	*	1					
3	V211-360-802-00	BOLT/SP	*	4					
4	V362-260-008-00	NUT/WASHER	*	4					
5	2204-512-003-10	STAY/HINGE/PZ	*	2					
6	V211-360-802-00	BOLT/SP	*	2					
7	2194-508-220-10	KNOB SET	*	1					
8	2194-508-008-00	PIN	*	1					
9	2209-508-013-00	PLATE/COVER/ROCK/PQZ	*	1					
10	2194-508-009-00	SPRING/HT020	*	1					
11	V361-260-006-00	NUT/WASHER	*	1					
12	3737-154-003-00	CUSHION,SEAT	*	2					
13	2232-512-006-00	PLATE/LOCK/COVER/ENG	*	1					
14	V211-360-802-00	BOLT/SP	*	1					
15	2232-512-004-00	CAP/ENGINECOVER/620	*	1					

FIG. 80 COVER(ENGINE)SYSTEM(D TYPE)

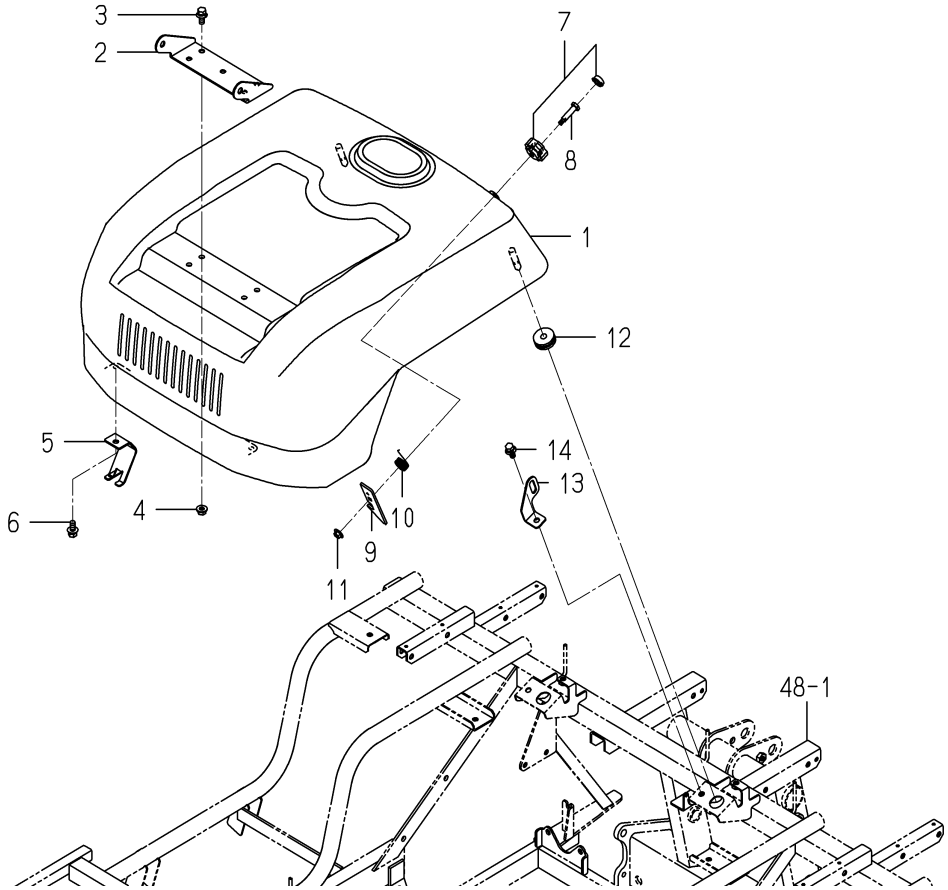

2233-512 -0100

KEY	PART CODE	DESCRIPTION	SPC	TYPE OF MODEL NP60E16		ITC	COL	GRP	REMARKS
1	2233-512-001-00	COVER/ENGINE/D/NP	*	1					
2	2213-512-003-10	BRACKET/SEAT/PZ/8	*	1					
3	V211-360-802-00	BOLT/SP	*	4					
4	V362-260-008-00	NUT/WASHER	*	4					
5	2204-512-003-10	STAY/HINGE/PZ	*	2					
6	V211-360-802-00	BOLT/SP	*	2					
7	2194-508-220-10	KNOB SET	*	1					
8	2194-508-008-00	PIN	*	1					
9	2209-508-013-00	PLATE/COVER/ROCK/PQZ	*	1					
10	2194-508-009-00	SPRING/HT020	*	1					
11	V361-260-006-00	NUT/WASHER	*	1					
12	3737-154-003-00	CUSHION,SEAT	*	2					
13	2232-512-006-00	PLATE/LOCK/COVER/ENG	*	1					
14	V211-360-802-00	BOLT/SP	*	1					

FIG. 81 TRAY(SEEDLING/SUB)SYSTEM

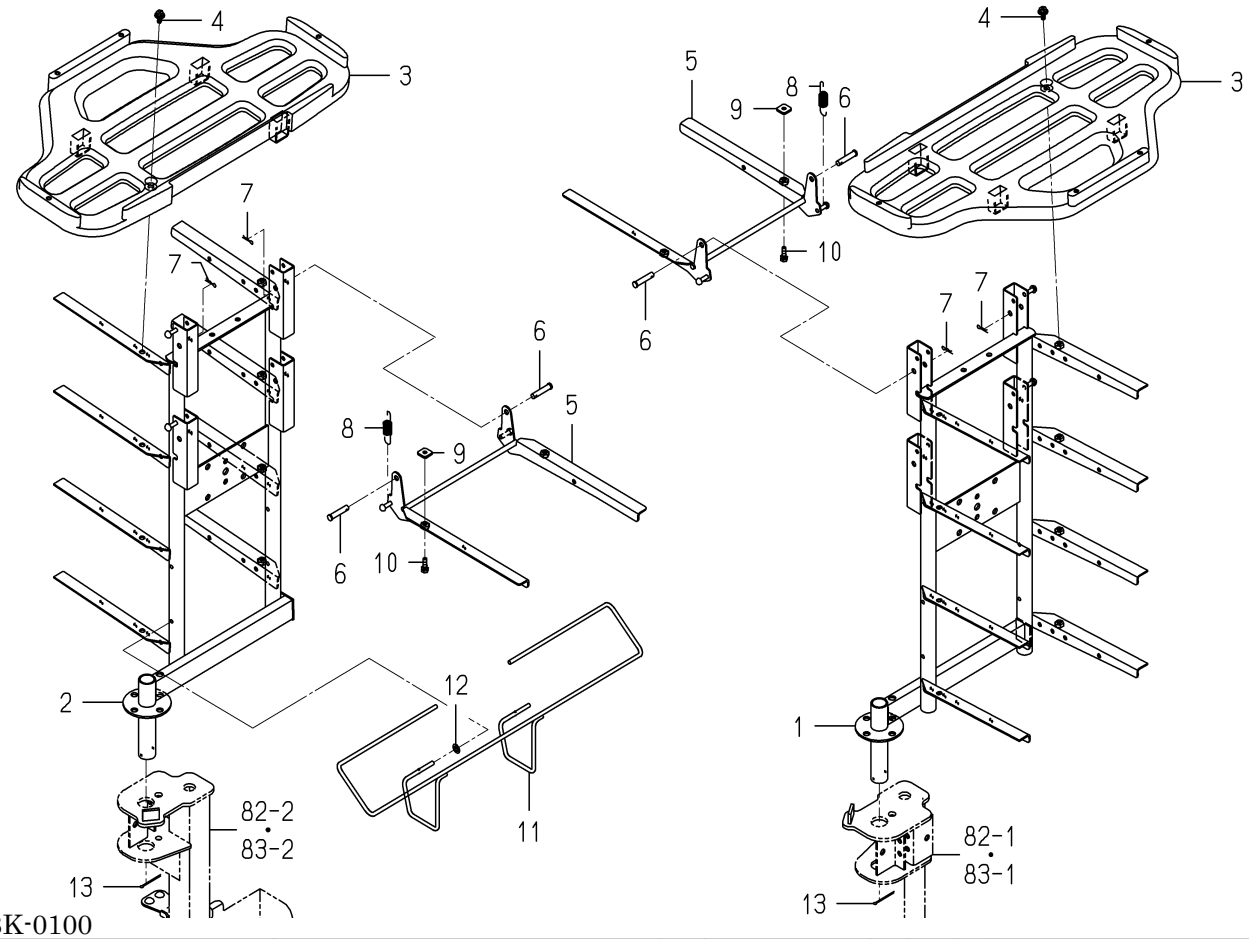

2204-513K-0100

KEY	PART CODE	DESCRIPTION	SPC	TYPE OF MODEL NP60E16		ITC	COL	GRP	REMARKS
1	2204-513-650-32	SEEDLING FRAME/E16/L	*	1			7F		
2	2204-513-660-32	SEEDLING FRAME/E16/R	*	1			7F		
3	2161-513-051-10	FRAME,SEEDLING	*	12					
4	2144-501-011-10	BOLT/M6X16X16	*	12					
5	2204-513-670-02	STAY/SWIVEL SEEDLING	*	4			7F		
6	2132-513-001-00	PIN	*	8					
7	3908-170-020-00	PIN/SNAP/08	*	8					
8	2133-812-009-00	SPRING,TENSION	*	4					
9	2204-513-014-00	PLATE/I/19X20	*	4					
10	V210-260-602-00	BOLT/S	*	4					
11	2204-513-680-00	FUCK/SCRAPER/K COMP	*	1					
12	2163-526-006-00	NUT	*	1					
13	V500-163-004-00	PIN,SPLIT/3 X40	*	2					

FIG. 82 STAY (FRAME/SEEDLING/SUB)SYSTEM(G TYPE)

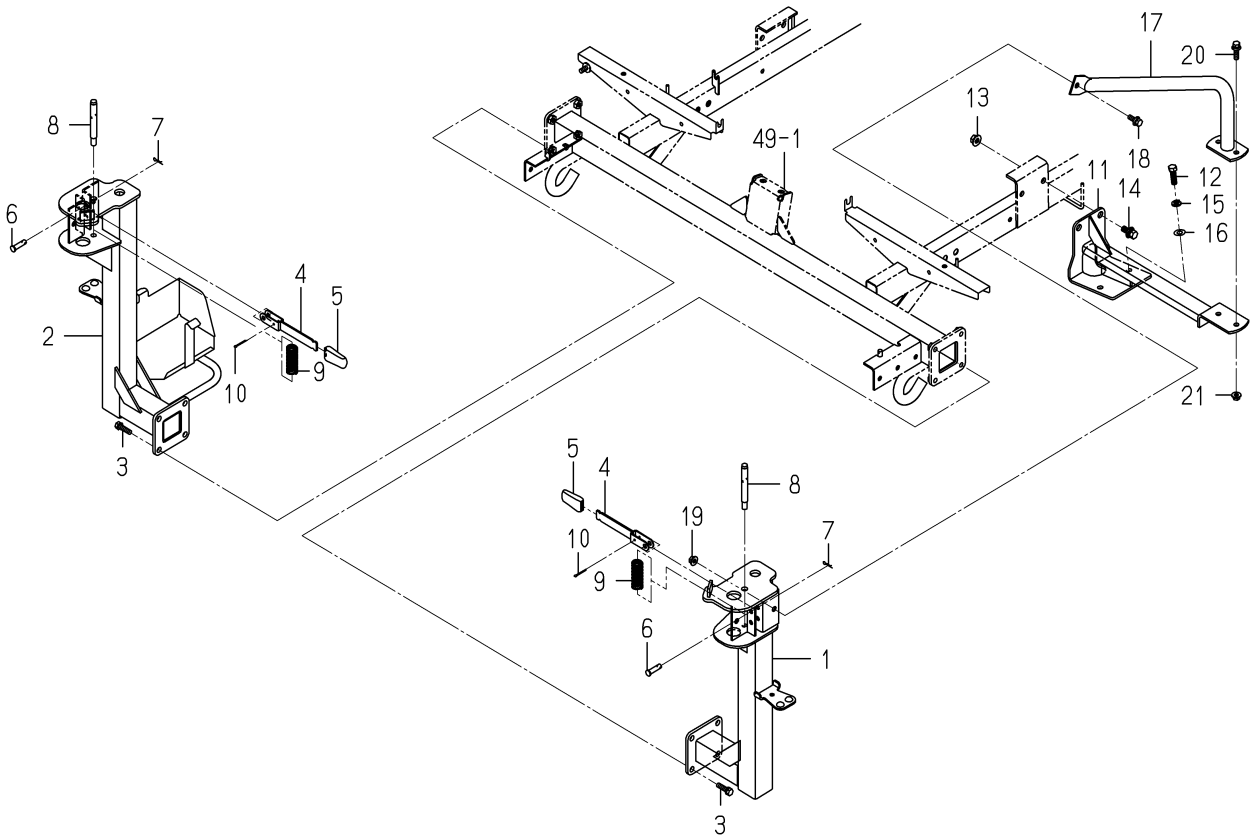

2232-514C-0100

KEY	PART CODE	DESCRIPTION	SPC	TYPE OF MODEL NP60E16		ITC	COL	GRP	REMARKS
1	2232-514-220-00	STAY/SEEDLING FRAME/	*	1			7F		
2	2232-514-230-10	STAY/SEEDLING FRAME/	*	1			7F		
3	V211-560-803-00	BOLT/M8X30	*	8					
4	2204-514-210-00	LEVER	*	2					
5	2145-751-004-00	GRIP	*	2					
6	2175-325-007-00	PIN/08X32	*	2					
7	3908-170-020-00	PIN/SNAP/08	*	2					
8	2204-514-003-00	PIN/12X100	*	2					
9	2798-102-002-00	SPRING	*	2					
10	V500-163-002-50	PIN,SPLIT/3 X25	*	2					
11	2232-514-250-00	STAY/SEEDLING FRAME/	*	2			7F		
12	V201-361-003-00	BOLT/M10X30	*	4					
13	V363-260-010-00	NUT/M10	*	4					
14	V211-361-002-50	BOLT/SP	*	4					
15	V401-160-010-00	WASHER,SP/M10	*	4					
16	V411-260-010-00	WASHER/M10	*	4					
17	2232-514-240-00	TUBE/SEEDLING FRAME/	*	2			7F		
18	V211-360-802-00	BOLT/SP	*	2					
19	V362-260-008-00	NUT/WASHER	*	2					
20	V211-360-803-00	BOLT/SP	*	4					
21	V362-260-008-00	NUT/WASHER	*	4					

FIG. 83 STAY (FRAME/SEEDLING/SUB)SYSTEM(D TYPE)

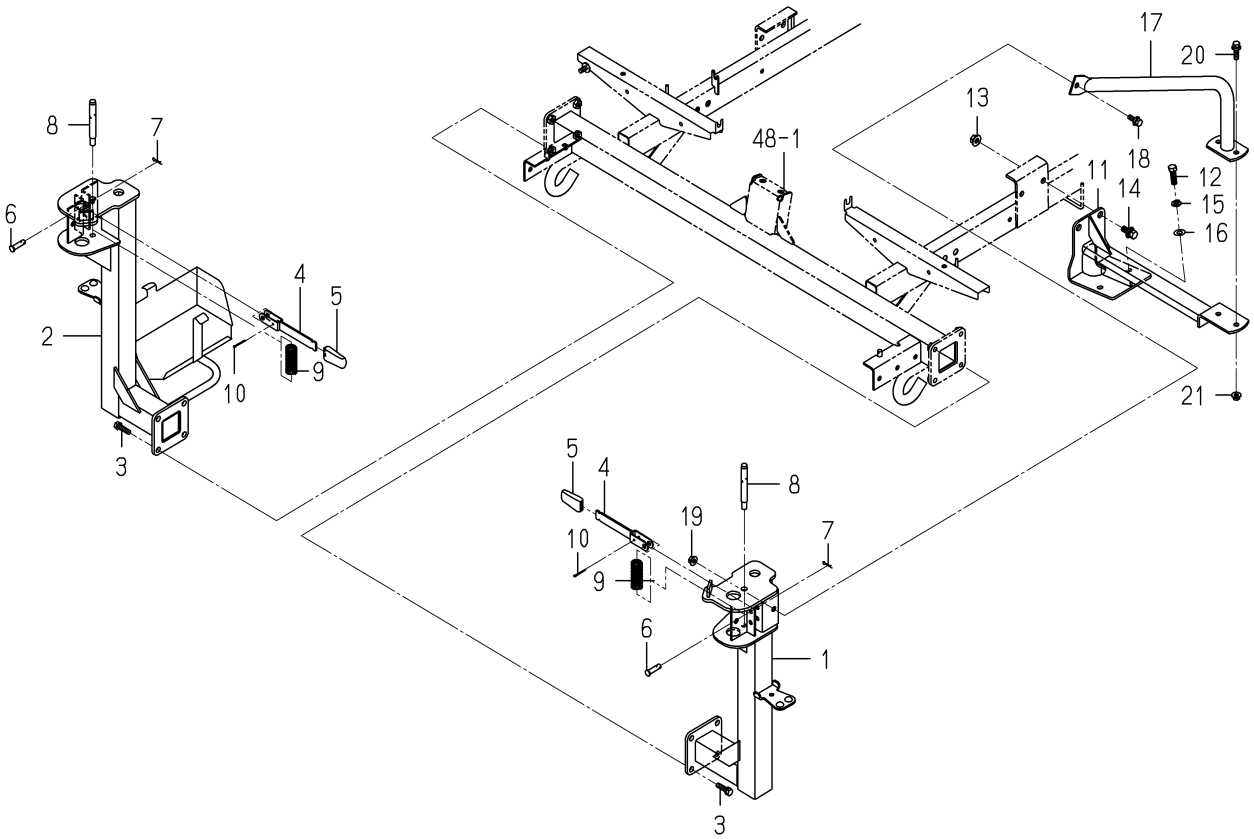

2232-514D-0100

KEY	PART CODE	DESCRIPTION	SPC	TYPE OF MODEL NP60E16		ITC	COL	GRP	REMARKS
1	2232-514-220-00	STAY/SEEDLING FRAME/	*	1			7F		
2	2232-514-400-00	STAY/SEEDLING FRAME/	*	1			7F		
3	V211-560-803-00	BOLT/M8X30	*	8					
4	2204-514-210-00	LEVER	*	2					
5	2145-751-004-00	GRIP	*	2					
6	2175-325-007-00	PIN/08X32	*	2					
7	3908-170-020-00	PIN/SNAP/08	*	2					
8	2204-514-003-00	PIN/12X100	*	2					
9	2798-102-002-00	SPRING	*	2					
10	V500-163-002-50	PIN,SPLIT/3 X25	*	2					
11	2232-514-250-00	STAY/SEEDLING FRAME/	*	2			7F		
12	V201-361-003-00	BOLT/M10X30	*	4					
13	V363-260-010-00	NUT/M10	*	4					
14	V211-361-002-50	BOLT/SP	*	4					
15	V401-160-010-00	WASHER,SP/M10	*	4					
16	V411-260-010-00	WASHER/M10	*	4					
17	2232-514-240-00	TUBE/SEEDLING FRAME/	*	2			7F		
18	V211-360-802-00	BOLT/SP	*	2					
19	V362-260-008-00	NUT/WASHER	*	2					
20	V211-360-803-00	BOLT/SP	*	4					
21	V362-260-008-00	NUT/WASHER	*	4					

FIG. 84 MIRROR(BACK)SYSTEM

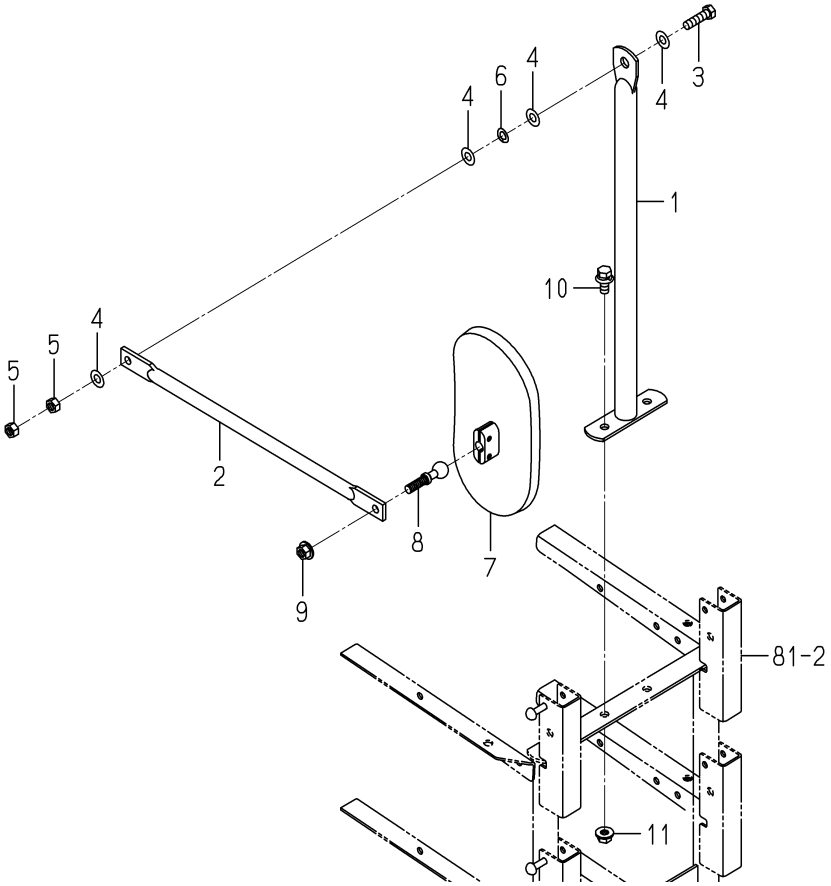

2204-515K-0100

KEY	PART CODE	DESCRIPTION	SPC	TYPE OF MODEL NP60E16		ITC	COL	GRP	REMARKS
1	2204-515-300-02	TUBE/MIRROR/K COMP	*	1			7F		
2	2204-515-001-02	STAY/MIRROR/K	*	1			7F		
3	V201-360-803-00	BOLT/M8X30	*	1					
4	V411-260-008-00	WASHER,PL/M 8	*	4					
5	V304-460-008-00	NUT/M8	*	2					
6	3533-306-001-00	SPAC/M8	*	1					
7	1541-621-210-00	MIRROR ASSY	*	1					
8	1600-619-212-00	PIVOT	*	1					
9	V362-260-008-00	NUT/WASHER	*	1					
10	V211-360-802-00	BOLT/SP	*	2					
11	V362-260-008-00	NUT/WASHER	*	2					

FIG. 85 SEAT SYSTEM

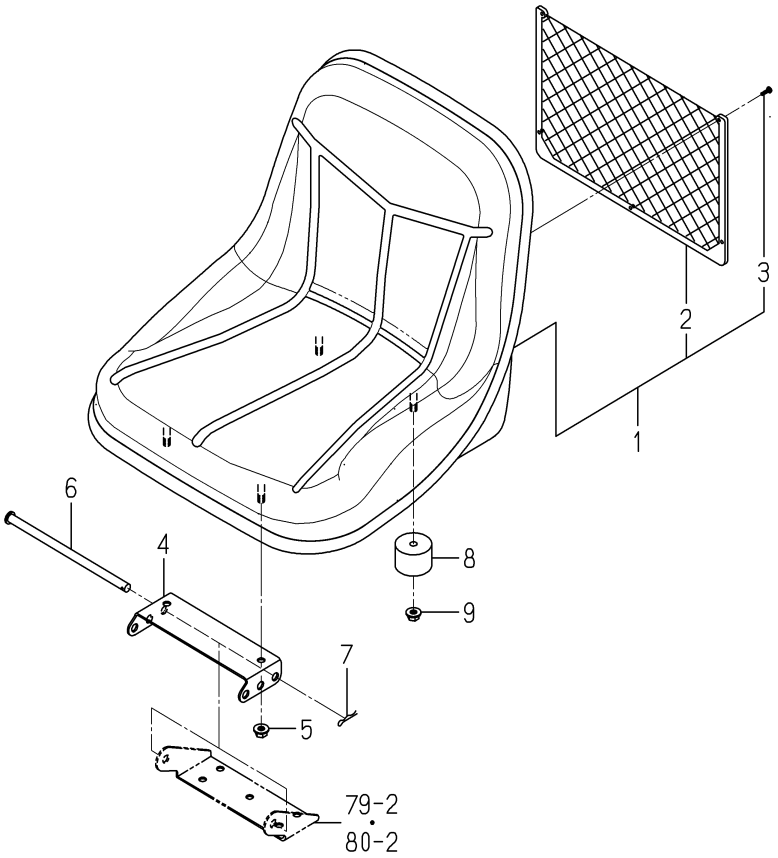

2232-517 -0100

KEY	PART CODE	DESCRIPTION	SPC	TYPE OF MODEL NP60E16		ITC	COL	GRP	REMARKS
1	2232-517-200-00	SEAT/NP ASSY	*	1					
2	2213-517-201-00	NETPOCKET	*	1					
3	V195-164-012-10	SCREW/TAPPING	*	5					
4	2213-517-003-10	PLATE/SEAT/PZ/8	*	1					
5	V362-260-008-00	NUT/WASHER	*	2					
6	1488-611-003-10	PIN,SEAT SET	*	1					
7	3505-704-003-00	PIN,HAIR (10)	*	1					
8	2232-517-001-00	CUSHION/SEAT/NP	*	2					
9	V362-260-008-00	NUT/WASHER	*	2					

FIG. 86 MARKER(CENTER)SYSTEM

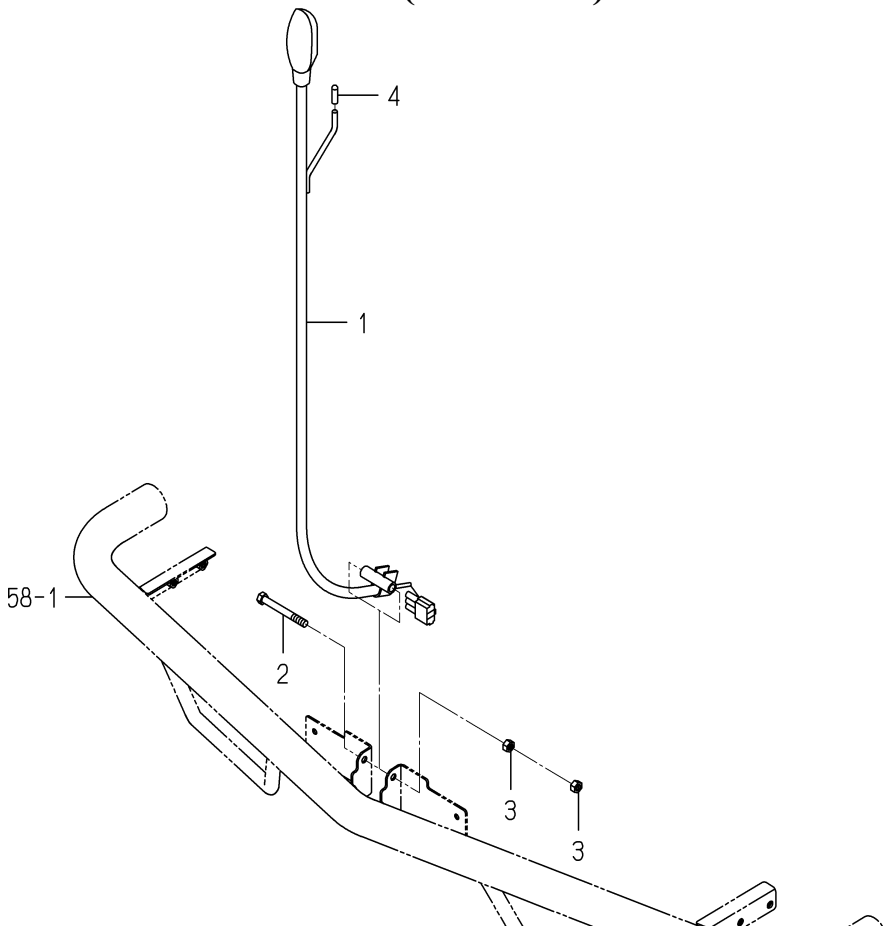

2232-524 -0100

KEY	PART CODE	DESCRIPTION	SPC	TYPE OF MODEL NP60E16		ITC	COL	GRP	REMARKS
1	2233-524-200-00	LAMP/MASCOT/NP8 ASSY	*	1					
2	V201-260-807-00	BOLT/M 8X70	*	1					
3	V304-260-008-00	NUT	*	2					
4	4512-106-005-00	CAP/D6/YELLOW	*	1					

FIG. 87 MARKER(SIDE)SYSTEM

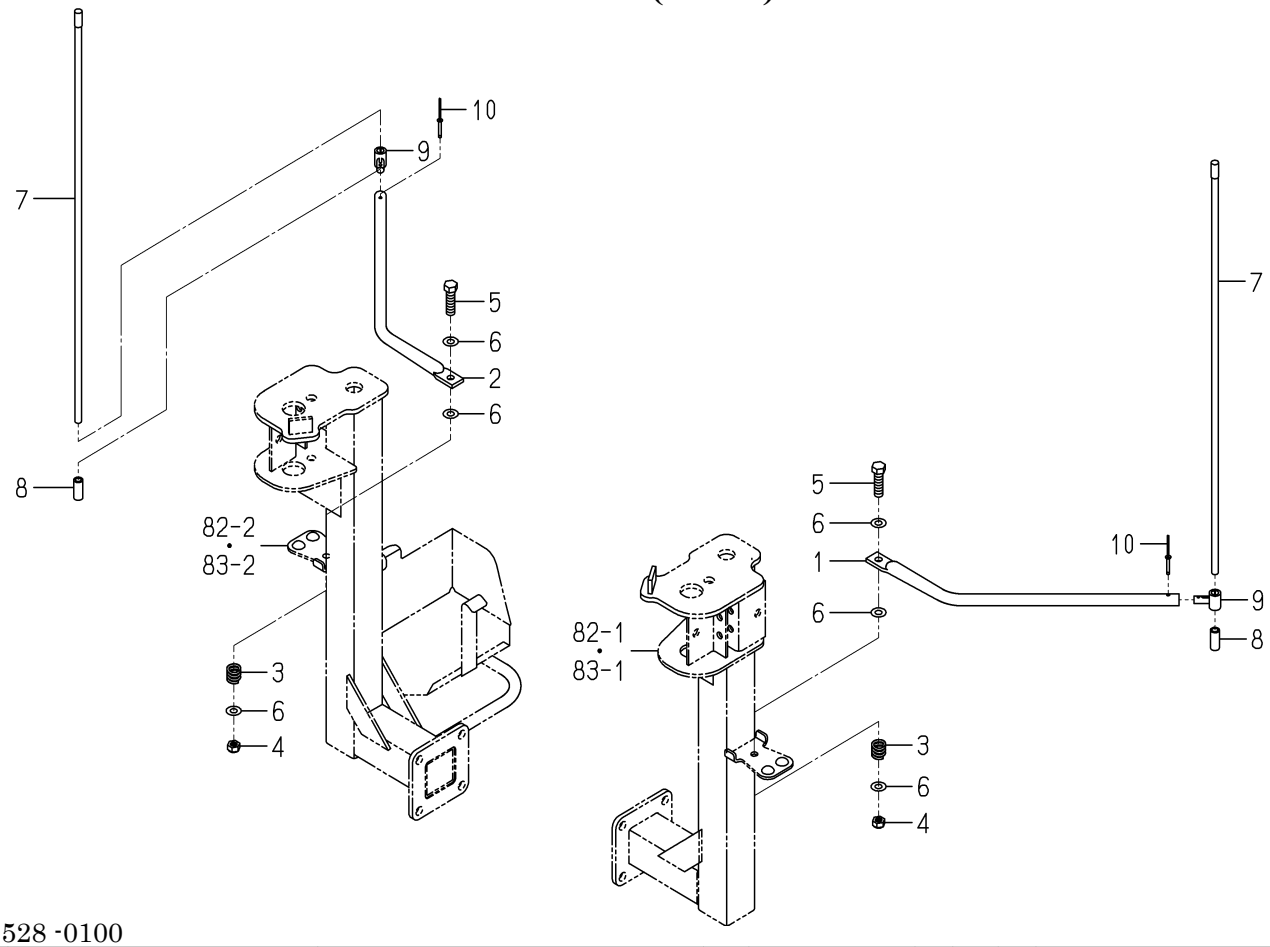

2232-528 -0100

KEY	PART CODE	DESCRIPTION	SPC	TYPE OF MODEL NP60E16		ITC	COL	GRP	REMARKS
1	2232-528-001-00	MARKER/SIDE/6/LH/NP	*	1			7F		
2	2232-528-004-00	MARKER/SIDE/6/RH/NP	*	1			7F		
3	2172-124-004-00	SPRING	*	2					
4	2144-117-002-00	NUT/M8	*	2					
5	V201-260-804-00	BOLT/M 8X40	*	2					
6	V411-260-008-00	WASHER,PL/M 8	*	6					
7	2161-528-001-00	MARKER(M)	*	2					
8	2186-528-007-00	CAP	*	2					
9	2175-528-008-20	BOSS,EXTENSION MARKE	*	2					
10	2186-528-244-00	RIVET	*	2					

FIG. 88 LAMP(HEAD)SYSTEM

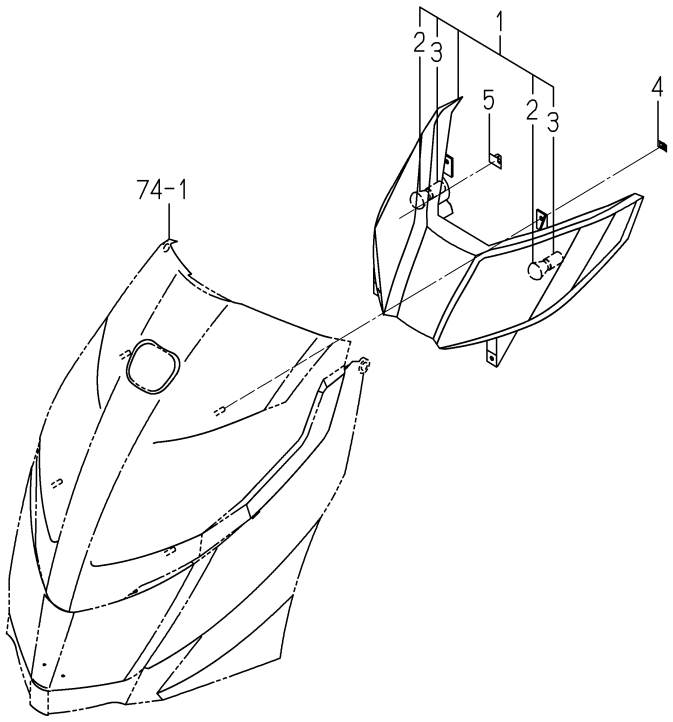

2232-532 -0100

KEY	PART CODE	DESCRIPTION	SPC	TYPE OF MODEL NP60E16		ITC	COL	GRP	REMARKS
1	2232-532-200-00	LAMP/HEAD/NP ASSY	*	1					
2	2161-532-202-00	BULB/12V18W	*	2					
3	2161-532-203-00	SOCKET	*	2					
4	V350-160-005-00	NUT,SPEED	*	4					
5	1426-621-038-00	CLAMP,HARNESS	*	1					

FIG. 89 PANEL(MONITOR)SYSTEM(D TYPE)(1/2)

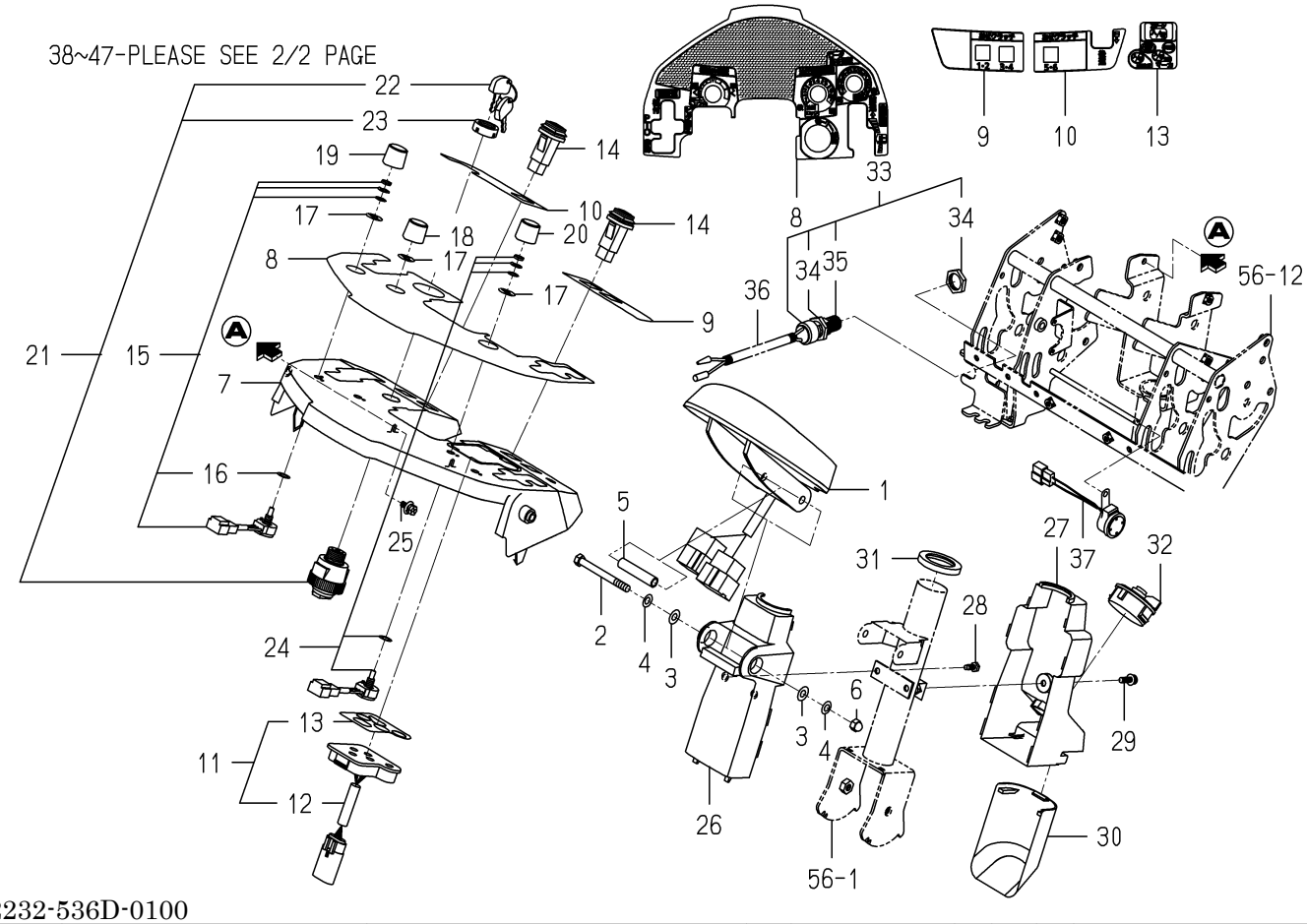

2232-536D-0100

KEY	PART CODE	DESCRIPTION	SPC	TYPE OF MODEL NP60E16		ITC	COL	GRP	REMARKS
1	2232-536-300-00	PANEL/MONITOR/NP/E16	*	1					
2	V201-260-808-00	BOLT/M 8X80	*	1					
3	V411-260-008-00	WASHER,PL/M 8	*	2					
4	2197-704-002-00	SPRING/8	*	2					
5	2232-536-007-00	COLLAR/09X12X57	*	1					
6	2232-536-008-00	UNUT/M8/CAP	*	1					
7	2232-536-003-10	PANEL/HOOD/NP	*	1					
8	2232-912-042-00	LABEL/PANEL/MAIN/6D/	*	1					
9	2232-912-043-00	LABEL/PANEL/LH/6/E16	*	1					
10	2232-912-044-00	LABEL/PANEL/RH/6/E16	*	1					
11	2232-536-330-00	SWITCH/CONTROLLER/E1	*	1					
12	2232-536-250-00	SWITCH/CONTROLLER/NP	*	1					
13	2232-912-045-00	LABEL/TACT/SWITCH/E1	*	1					
14	2512-665-220-00	SWITCH/MOMENTARY/G/W	*	3					
15	1729-609-240-00	SWITCH/VR ASSY	*	2					
16	1675-695-005-00	INSULATOR	*	2					
17	3652-273-002-00	SORING	*	3					
18	2204-536-551-00	KNOB/HYDRAULIC SENSI	*	1					
19	3849-270-402-00	KNOB/BL	*	1					
20	3849-270-403-00	KNOB/GR	*	1					
21	1716-680-200-20	SWITCH/MAIN ASSY	*	1					
22	2186-536-211-00	KEY	*	2					
23	2186-536-212-00	NUT/RING	*	1					
24	2232-536-290-00	SWITCH/VR/NP ASSY	*	1					
25	2144-501-011-10	BOLT/M6X16X16	*	2					
26	2232-536-001-10	COVER/COLUMN/FRONT/N	*	1					
27	2232-536-002-00	COVER/COLUMN/REAR/NP	*	1					
28	2161-506-005-00	SCREW/TAPPING/6X16	*	2					
29	V120-366-001-60	SCREW	*	1					
30	2232-536-006-00	COVER/COLUMN/LOWER/N	*	1					

FIG. 89 PANEL(MONITOR)SYSTEM(D TYPE)(2/2)

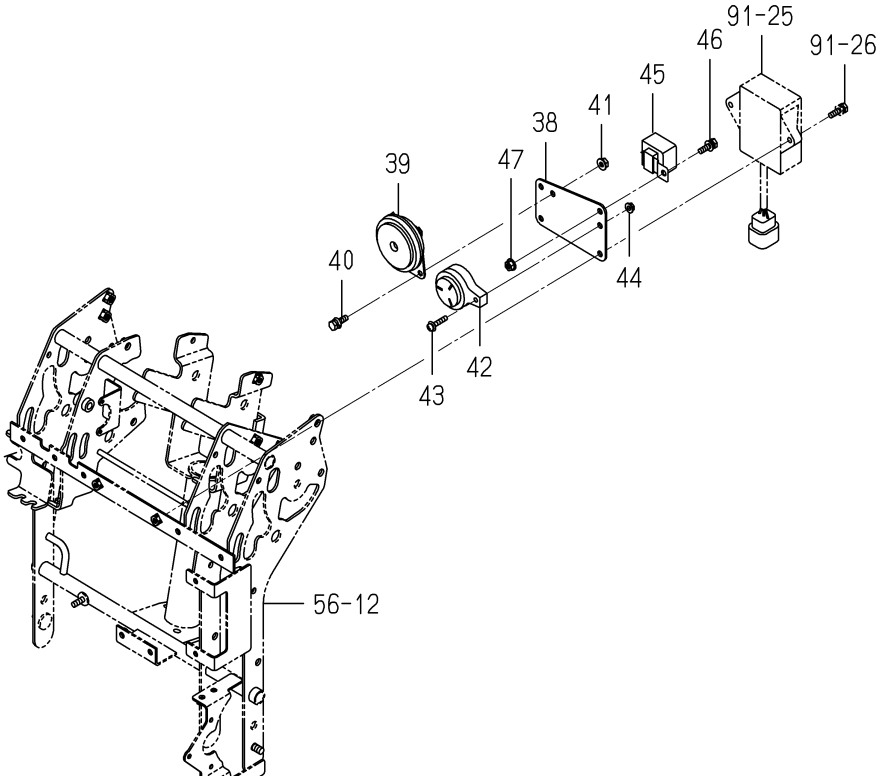

2232-536D-0100

KEY	PART CODE	DESCRIPTION	SPC	TYPE OF MODEL NP60E16		ITC	COL	GRP	REMARKS
31	2232-536-011-00	CAP/COVER/COLUMN/NP	*	1					
32	3843-271-210-00	SWITVH/COMBI	*	1					
33	2144-542-220-00	SWITCH,SAFETY ASSY	*	1					
34	1491-623-222-00	NUT/M20	*	2					
35	1491-623-223-00	BOOT	*	1					
36	2151-810-004-10	CORRUGATED TUBE/07X1	*	1					
37	2515-665-210-00	BUZZER	*	1					
38	2232-536-012-00	PLATE/SWITCH/E16/NP	*	1					
39	1740-680-530-20	HORN ASSY	*	1					
40	V210-360-602-00	BOLT/SP	*	2					
41	V360-260-006-00	NUT/M6	*	2					
42	2204-542-200-00	BUZZERASSY	*	1					
43	V120-365-002-50	SCREW/M5X25	*	1					
44	V360-260-005-00	NUT/M5	*	1					
45	1716-680-290-00	RELAY/FLASHER ASSY	*	1					
46	V210-360-602-00	BOLT/SP	*	1					
47	V360-260-006-00	NUT/M6	*	1					

FIG. 90 PANEL(MONITOR)SYSTEM(G TYPE)(1/2)

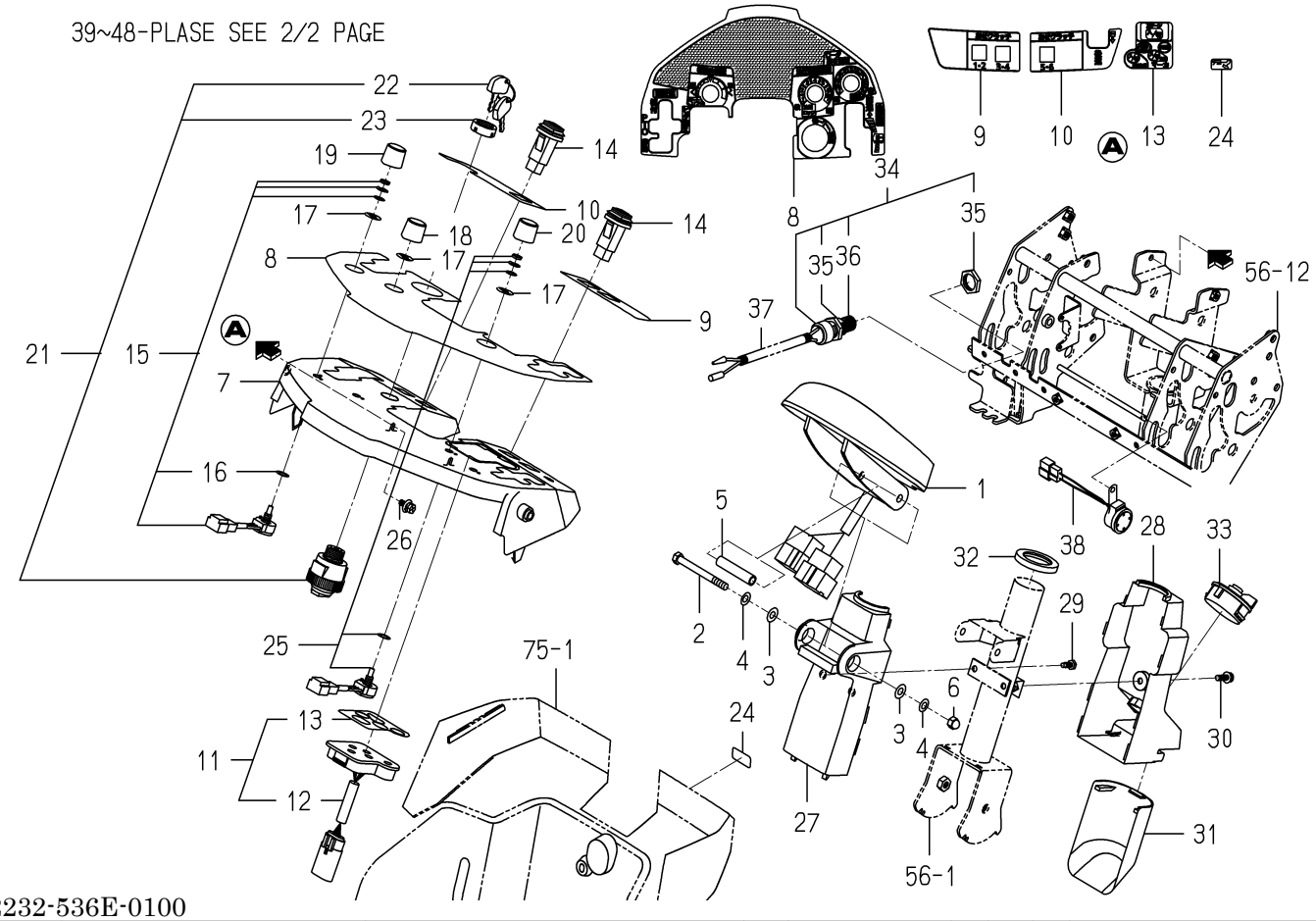

2232-536E-0100

KEY	PART CODE	DESCRIPTION	SPC	TYPE OF MODEL NP60E16		ITC	COL	GRP	REMARKS
1	2232-536-300-00	PANEL/MONITOR/NP/E16	*	1					
2	V201-260-808-00	BOLT/M 8X80	*	1					
3	V411-260-008-00	WASHER,PL/M 8	*	2					
4	2197-704-002-00	SPRING/8	*	2					
5	2232-536-007-00	COLLAR/09X12X57	*	1					
6	2232-536-008-00	UNUT/M8/CAP	*	1					
7	2232-536-003-10	PANEL/HOOD/NP	*	1					
8	2232-912-041-00	LABEL/PANEL/MAIN/6G/	*	1					
9	2232-912-043-00	LABEL/PANEL/LH/6/E16	*	1					
10	2232-912-044-00	LABEL/PANEL/RH/6/E16	*	1					
11	2232-536-330-00	SWITCH/CONTROLLER/E1	*	1					
12	2232-536-250-00	SWITCH/CONTROLLER/NP	*	1					
13	2232-912-045-00	LABEL/TACT/SWITCH/E1	*	1					
14	2512-665-220-00	SWITCH/MOMENTARY/G/W	*	3					
15	1729-609-240-00	SWITCH/VR ASSY	*	2					
16	1675-695-005-00	INSULATOR	*	2					
17	3652-273-002-00	SORING	*	3					
18	2204-536-551-00	KNOB/HYDRAULIC SENSI	*	1					
19	3849-270-402-00	KNOB/BL	*	1					
20	3849-270-403-00	KNOB/GR	*	1					
21	2186-536-210-20	SWITCH,STARTER	*	1					
22	2186-536-211-00	KEY	*	1					
23	2186-536-212-00	NUT/RING	*	1					
24	2232-912-028-00	LABEL/CHOKE	*	1					
25	2232-536-290-00	SWITCH/VR/NP ASSY	*	1					
26	2144-501-011-10	BOLT/M6X16X16	*	2					
27	2232-536-001-10	COVER/COLUMN/FRONT/N	*	1					
28	2232-536-002-00	COVER/COLUMN/REAR/NP	*	1					
29	2161-506-005-00	SCREW/TAPPING/6X16	*	2					
30	V120-366-001-60	SCREW	*	1					

FIG. 90 PANEL(MONITOR)SYSTEM(G TYPE)(2/2)

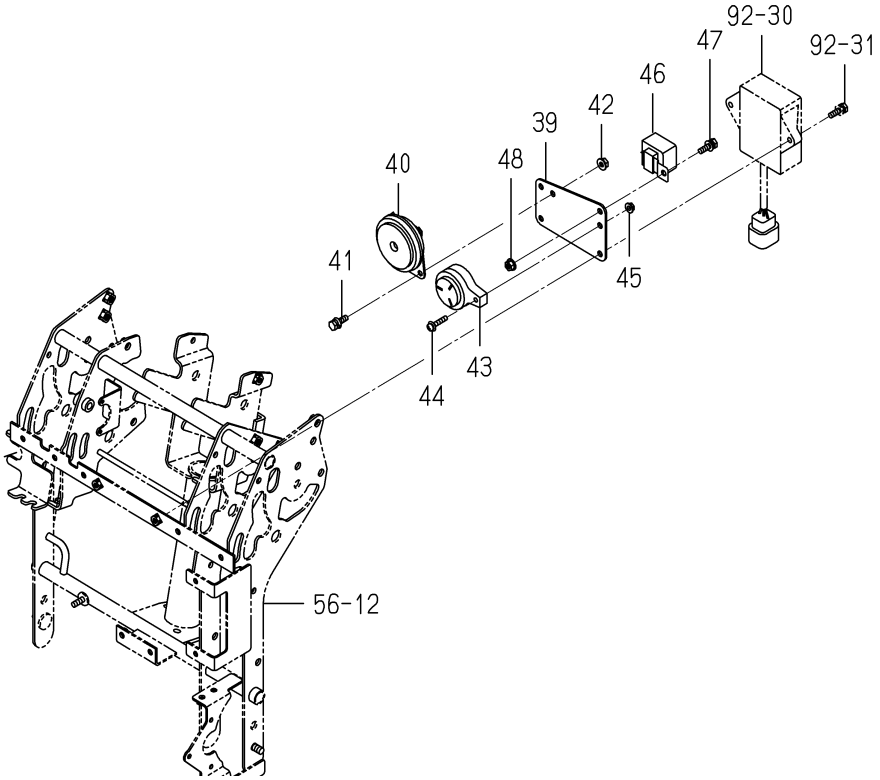

2232-536E-0100

KEY	PART CODE	DESCRIPTION	SPC	TYPE OF MODEL NP60E16		ITC	COL	GRP	REMARKS
31	2232-536-006-00	COVER/COLUMN/LOWER/N	*	1					
32	2232-536-011-00	CAP/COVER/COLUMN/NP	*	1					
33	3843-271-210-00	SWITVH/COMBI	*	1					
34	2144-542-220-00	SWITCH,SAFETY ASSY	*	1					
35	1491-623-222-00	NUT/M20	*	2					
36	1491-623-223-00	BOOT	*	1					
37	2151-810-004-10	CORRUGATED TUBE/07X1	*	1					
38	2515-665-210-00	BUZZER	*	1					
39	2232-536-012-00	PLATE/SWITCH/E16/NP	*	1					
40	1740-680-530-20	HORN ASSY	*	1					
41	V210-360-602-00	BOLT/SP	*	2					
42	V360-260-006-00	NUT/M6	*	2					
43	2204-542-200-00	BUZZERASSY	*	1					
44	V120-365-002-50	SCREW/M5X25	*	1					
45	V360-260-005-00	NUT/M5	*	1					
46	1716-680-290-00	RELAY/FLASHER ASSY	*	1					
47	V210-360-602-00	BOLT/SP	*	1					
48	V360-260-006-00	NUT/M6	*	1					

FIG. 91 HARNESS (TRAVELING SECTION)SYSTEM(D TYPE)

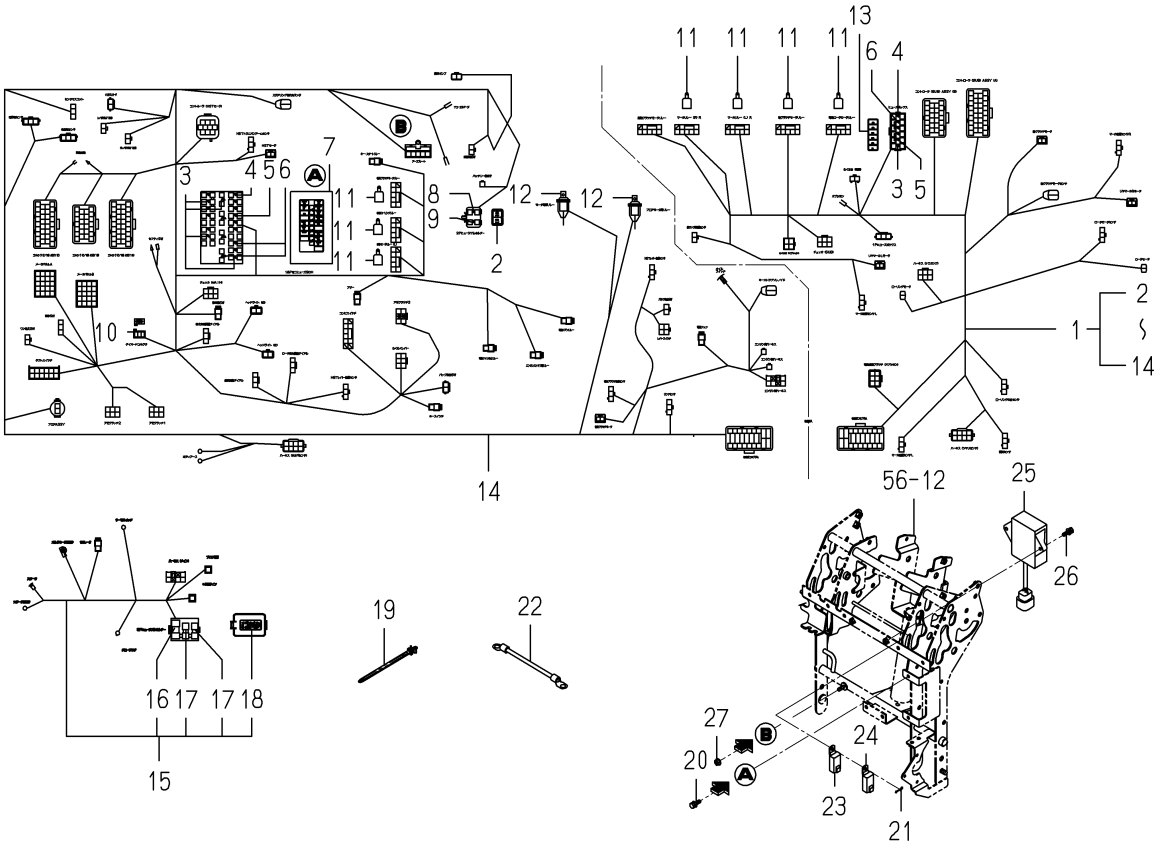

2232-537P-0100

KEY	PART CODE	DESCRIPTION	SPC	TYPE OF MODEL NP60E16		ITC	COL	GRP	REMARKS
1	2232-537-700-00	HARNESS/MAIN/6D ASSY	*	1					
2	2204-538-211-00	LABEL/FUSE/MAIN/M	*	1					
3	3824-247-202-00	FUSE/BLADE/32V05A	*	5					
4	3821-262-202-00	FUSE/BLADE/32V10A	*	8					
5	3821-262-204-00	FUSE/BLADE/32V20A	*	8					
6	3824-247-203-00	FUSE,BLADE/32	*	4					
7	2204-537-202-00	CAP/FUSE BOX	*	1					
8	1650-650-222-00	FUSE/SLOWBLOW	*	1					
9	1650-650-243-00	FUSE/SLOWBLOW	*	1					
10	3650-261-221-00	DIODE/1.5A-3P ASSY	*	1					
11	3841-277-300-00	RELAY,TWIN	*	7					
12	1719-650-250-00	RELAY ASSY	*	2					
13	2232-537-204-00	ORNAMENT/FUSE/REAR	*	1					
14	2232-537-220-20	HARNESS/REAR/6F ASSY	*	1					
15	2233-537-230-00	HARNESS/ENGINE/DF	*	1					
16	3829-260-303-00	FUSE,SLOW BLOW	*	1					
17	1614-690-202-00	FUSE/SLOWBLOW	*	2					
18	2233-537-231-00	LABEL/FUSE/ENGINE/DF	*	1					
19	2204-537-002-00	BAND	*	20					
20	V210-360-602-00	BOLT/SP	*	2					
21	2161-735-005-00	PIN	*	1					
22	3623-263-001-00	WIRE,LEAD	*	1					
23	1690-652-210-00	RELAY ASSY	*	2					
24	1650-658-270-00	RELAY/4P ASSY	*	1					
25	1754-640-230-10	CONTROLLER/MOTO ASSY	*	1					
26	V210-360-602-00	BOLT/SP	*	2					
27	V360-260-006-00	NUT/WASHER/M6	*	1					

FIG. 92 HARNESS (TRAVELING SECTION)SYSTEM(G TYPE)

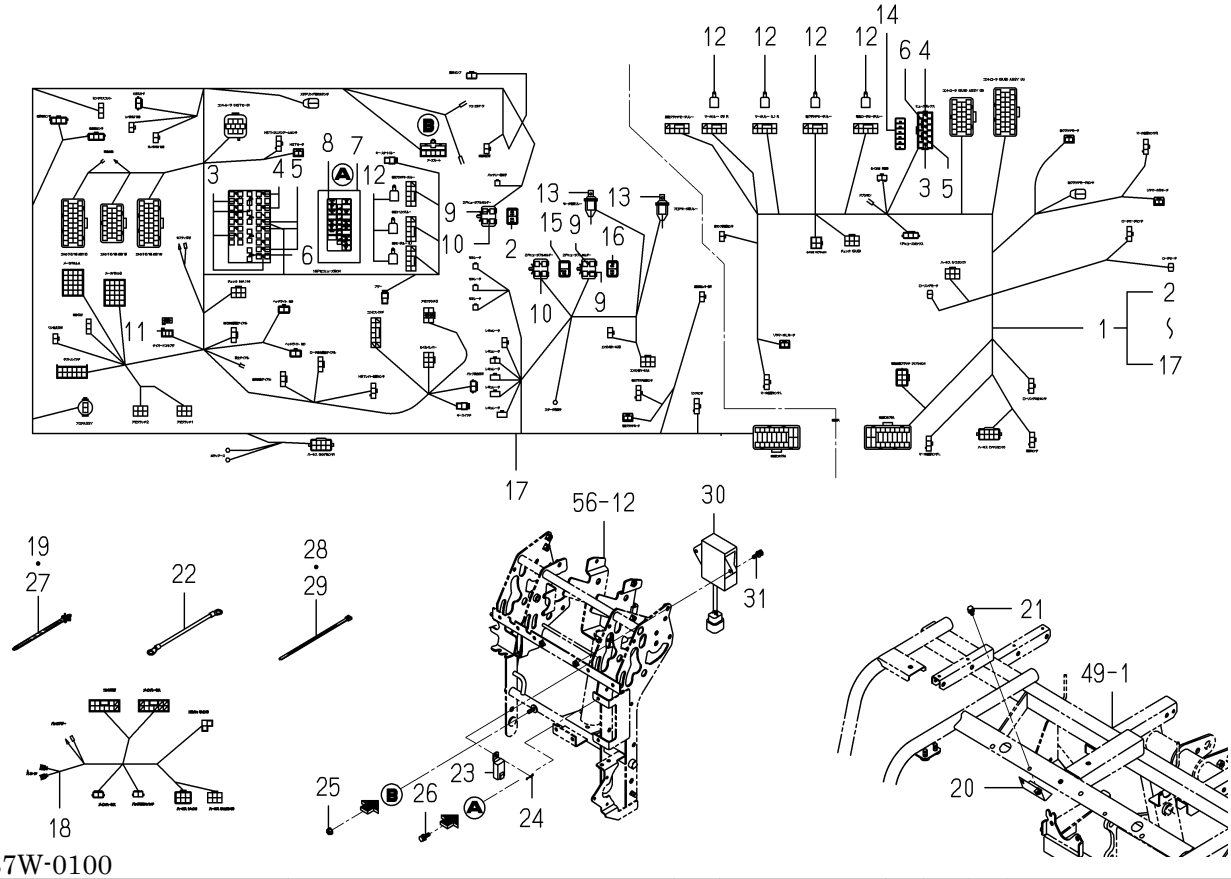

2232-537W-0100

KEY	PART CODE	DESCRIPTION	SPC	TYPE OF MODEL NP60E16		ITC	COL	GRP	REMARKS
1	2232-537-200-40	HARNESS/MAIN/6G ASSY	*	1					
2	2204-538-211-00	LABEL/FUSE/MAIN/M	*	1					
3	3842-247-202-00	FUSE/BLADE/32V05A	*	5					
4	3821-262-202-00	FUSE/BLADE/32V10A	*	7					
5	3821-262-204-00	FUSE/BLADE/32V20A	*	8					
6	3827-270-203-00	FUSE/BLADE/32V25A	*	4					
7	2204-537-202-00	CAP/FUSE BOX	*	1					
8	2232-537-203-10	ORNAMENT/FUSE/MAIN/G	*	1					
9	1650-650-222-00	FUSE/SLOWBLOW	*	3					
10	1650-650-243-00	FUSE/SLOWBLOW	*	2					
11	3650-261-221-00	DIODE/1.5A-3P ASSY	*	1					
12	3841-277-300-00	RELAY,TWIN	*	7					
13	1719-650-250-00	RELAY ASSY	*	2					
14	2232-537-204-00	ORNAMENT/FUSE/REAR	*	1					
15	2232-537-201-10	LABEL/FUSE/REAR/MOTO	*	1					
16	8841-511-201-00	LABEL/SLOW BLOW	*	1					
17	2232-537-220-20	HARNESS/REAR/6F ASSY	*	1					
18	2232-537-960-00	HARNESS/E16	*	1					
19	2204-537-002-00	BAND	*	20					
20	2232-537-240-00	STAY/FUSEBOX COMP	*	1					
21	V210-360-601-60	BOLT(SP)/M6X16	*	1					
22	1544-623-008-10	HARNESS,WIRE/NO.8	*	1					
23	1650-658-270-00	RELAY/4P ASSY	*	1					
24	2161-735-005-00	PIN	*	1					
25	V360-260-006-00	NUT/M6	*	1					
26	V210-360-602-00	BOLT/SP	*	2					
27	2204-537-002-00	BAND	*	4					
28	1376-402-003-00	BAND,WIRE/140	*	5					
29	1342-402-006-00	BAND/WIRE/250	*	2					
30	1754-640-230-10	CONTROLLER/MOTO ASSY	*	1					

FIG. 92 HARNESS (TRAVELING SECTION)SYSTEM(G TYPE)

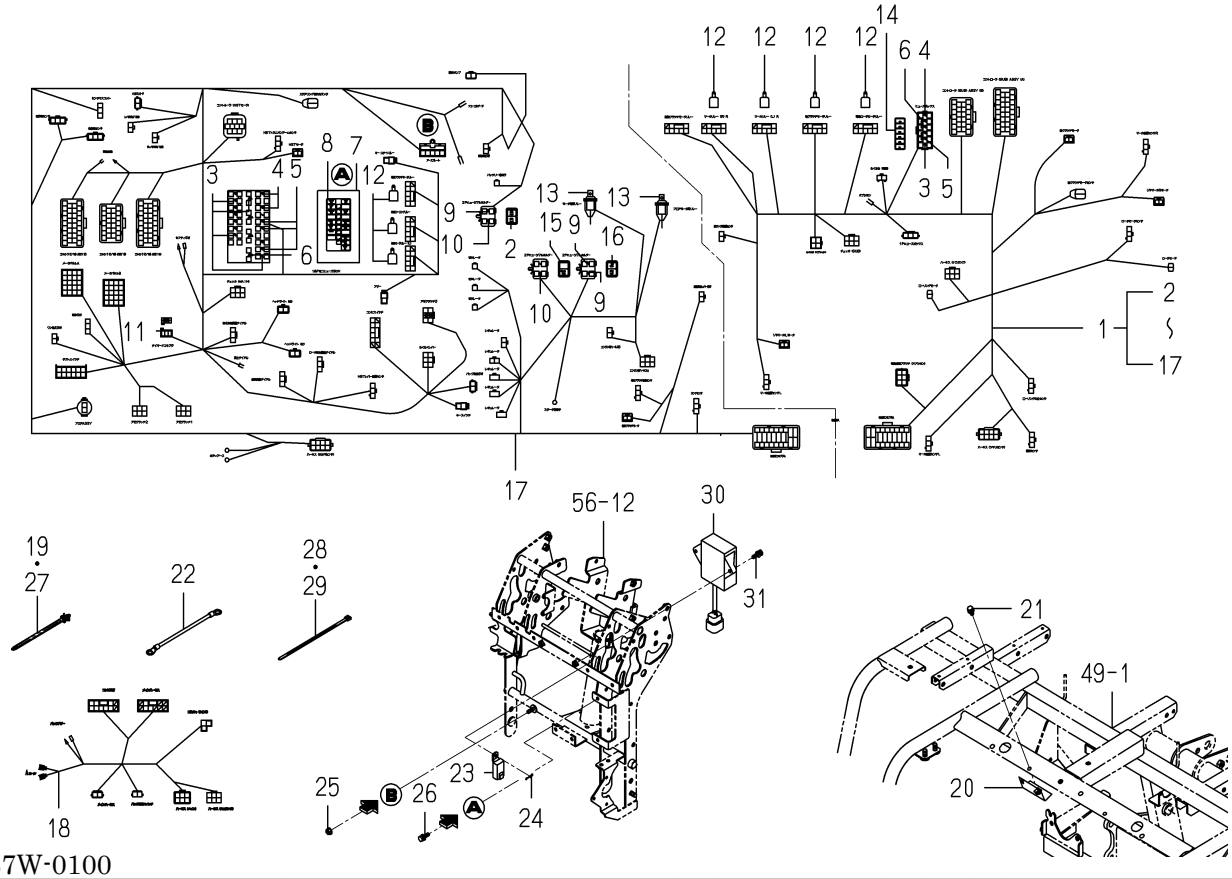

2232-537W-0100

KEY	PART CODE	DESCRIPTION	SPC	TYPE OF MODEL NP60E16		ITC	COL	GRP	REMARKS
31	V210-360-602-00	BOLT/SP	*	2					

FIG. 93 HARNESS(PLANTING SECTION)SYSTEM

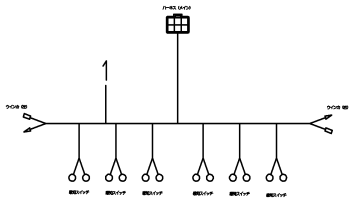

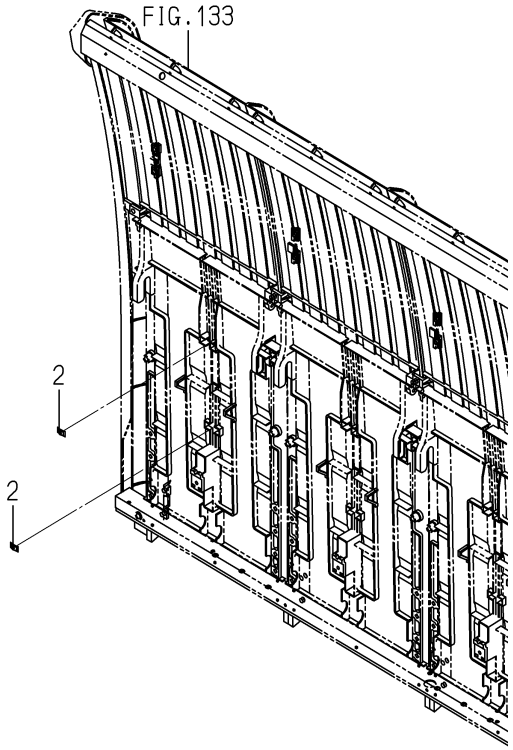

2232-539 -0100

KEY	PART CODE	DESCRIPTION	SPC	TYPE OF MODEL NP60E16		ITC	COL	GRP	REMARKS
1	2204-539-200-30	HARNESS/SEEDLING TAN	*	1					
2	V350-160-004-00	NUT,SPEED/P4	*	12					

FIG. 94 BATTERY SYSTEM(G TYPE)

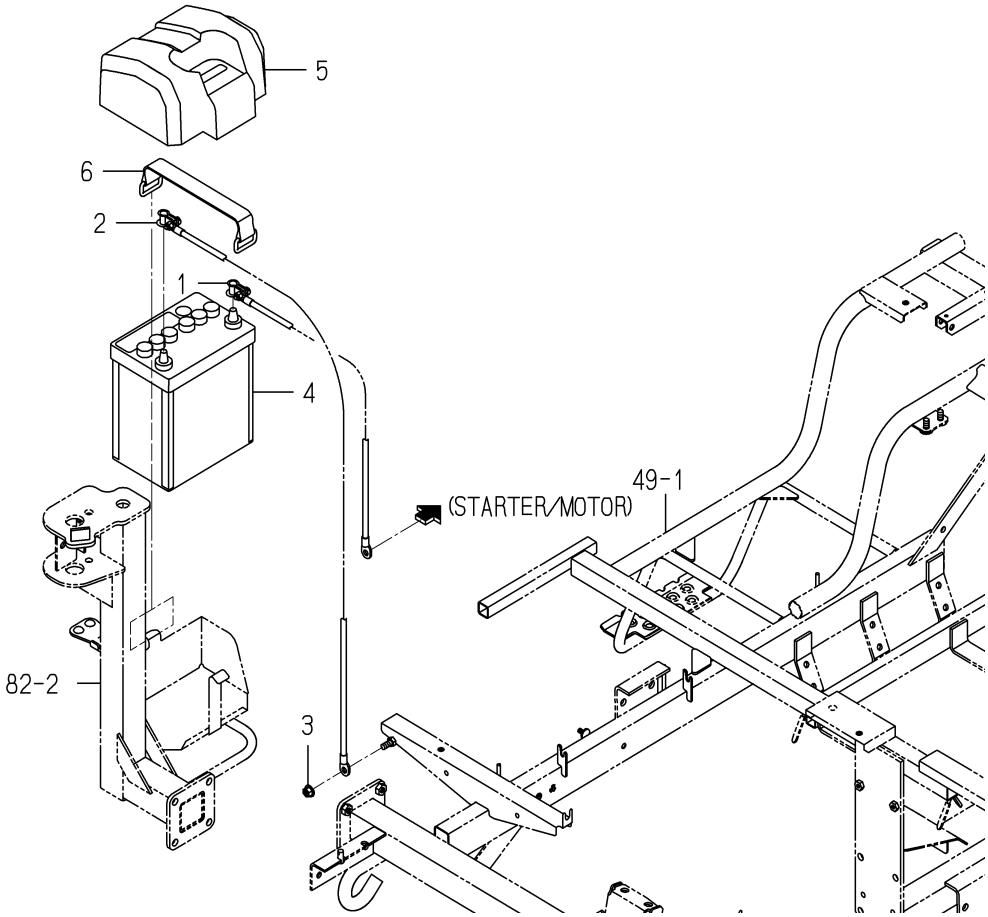

2232-541 -0100

KEY	PART CODE	DESCRIPTION	SPC	TYPE OF MODEL NP60E16		ITC	COL	GRP	REMARKS
1	2232-541-200-00	HARNESS/BATTERY/G/NP	*	1					
2	2232-541-220-00	HARNESS/BATTERY EART	*	1					
3	V362-260-008-00	NUT/WASHER	*	1					
4	1728-112-250-10	BATTERY/44B19L ASSY	*	1					
5	2232-541-001-00	COVER/BATTERY/NP	*	1					
6	3640-260-200-30	BATTERYSTAY COMP	*	1					

FIG. 95 BATTERY SYSTEM(D TYPE)

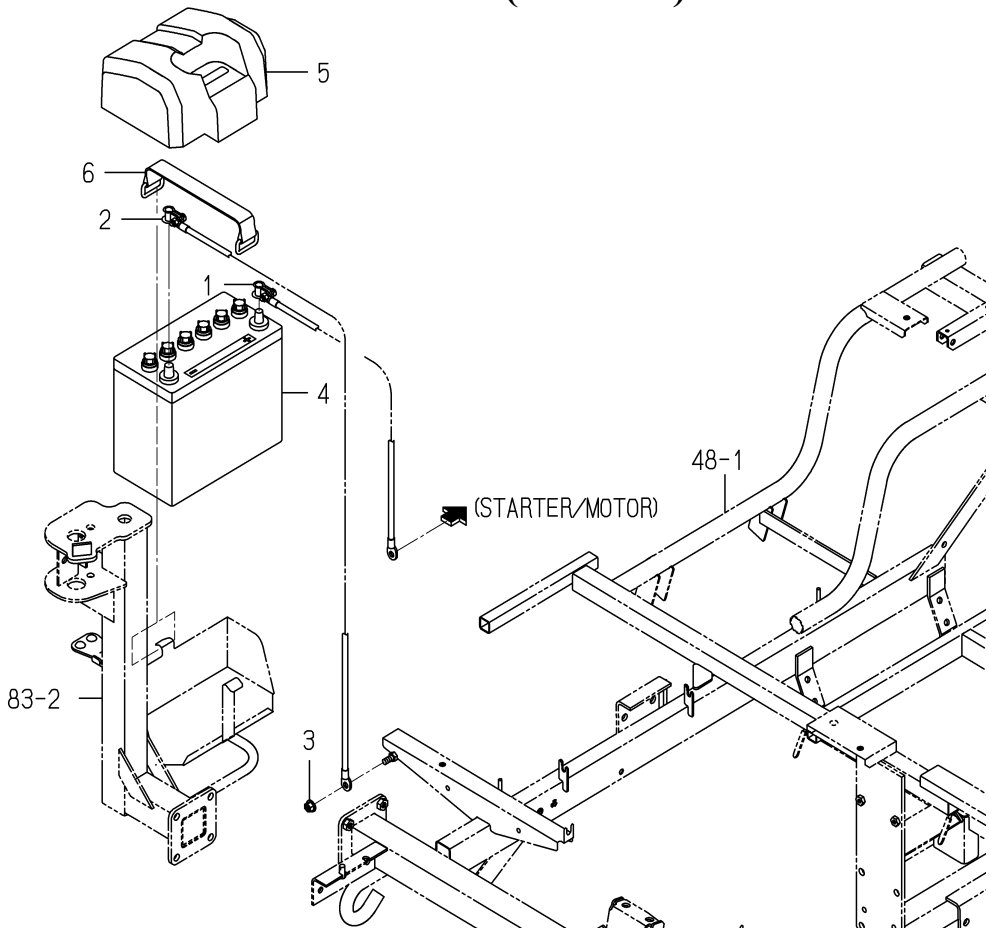

2233-541B-0100

KEY	PART CODE	DESCRIPTION	SPC	TYPE OF MODEL NP60E16		ITC	COL	GRP	REMARKS
1	2233-541-300-00	HARNESS/BATTERY/6D/N	*	1					
2	2232-541-230-00	HARNESS/BATTERY EART	*	1					
3	V362-260-008-00	NUT/WASHER	*	1					
4	3656-260-200-30	BATTERY(55B24L) ASSY	*	1					
5	2233-541-001-00	COVER/BATTERY/D/NP	*	1					
6	3640-260-200-30	BATTERYSTAY COMP	*	1					

FIG. 96 CONTROLLER(FRONT)SYSTEM

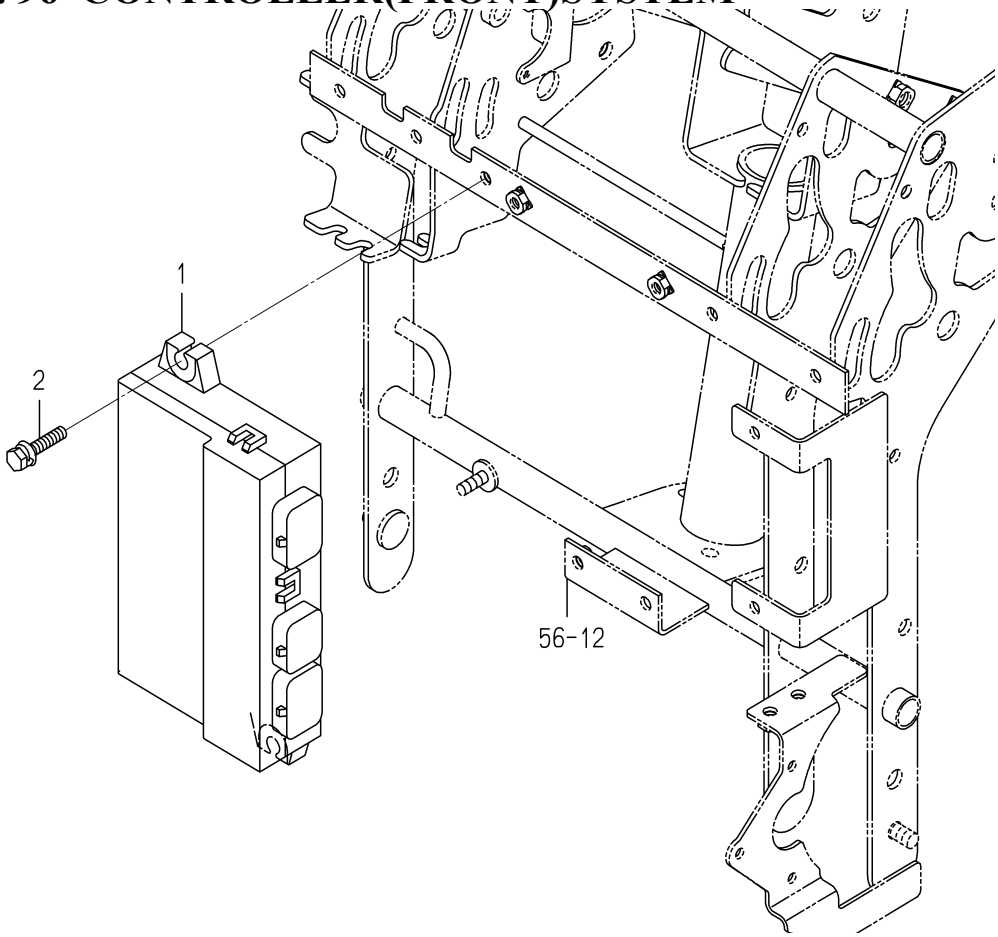

2232-545 -0100

KEY	PART CODE	DESCRIPTION	SPC	TYPE OF MODEL NP60E16		ITC	COL	GRP	REMARKS
1	2232-545-200-70	CONTROLLER/6/FRONT	*	1					
2	V210-360-603-00	BOLT/SP	*	2					

FIG. 97 CONTROLLER(REAR)SYSTEM

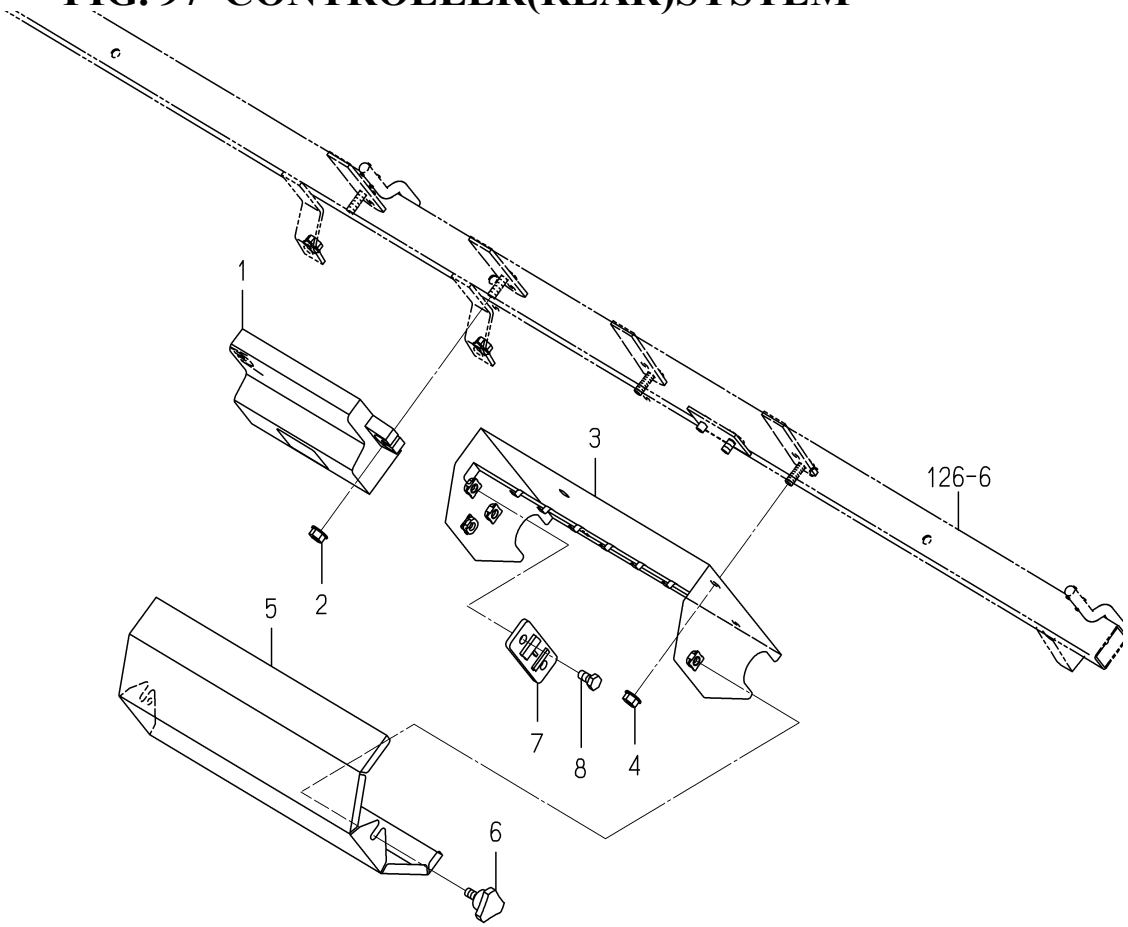

2232-546 -0100

KEY	PART CODE	DESCRIPTION	SPC	TYPE OF MODEL NP60E16		ITC	COL	GRP	REMARKS
1	2232-546-200-20	CONTROLLER/6/REAR	*	1					
2	V360-260-006-00	NUT/M6	*	2					
3	2232-546-210-10	CASE/RELAY COMP	*	1			6G		
4	V360-260-006-00	NUT/M6	*	2					
5	2232-546-001-00	COVER/RELAY	*	1					
6	1716-601-003-00	BOLT/KNOB/M06X13	*	2					
7	3659-836-002-00	BRACKET,FUSE	*	1					
8	V200-260-601-20	BOLT/M 6X12	*	2					

FIG. 98 CLUTCH(PLANTING)SYSTEM

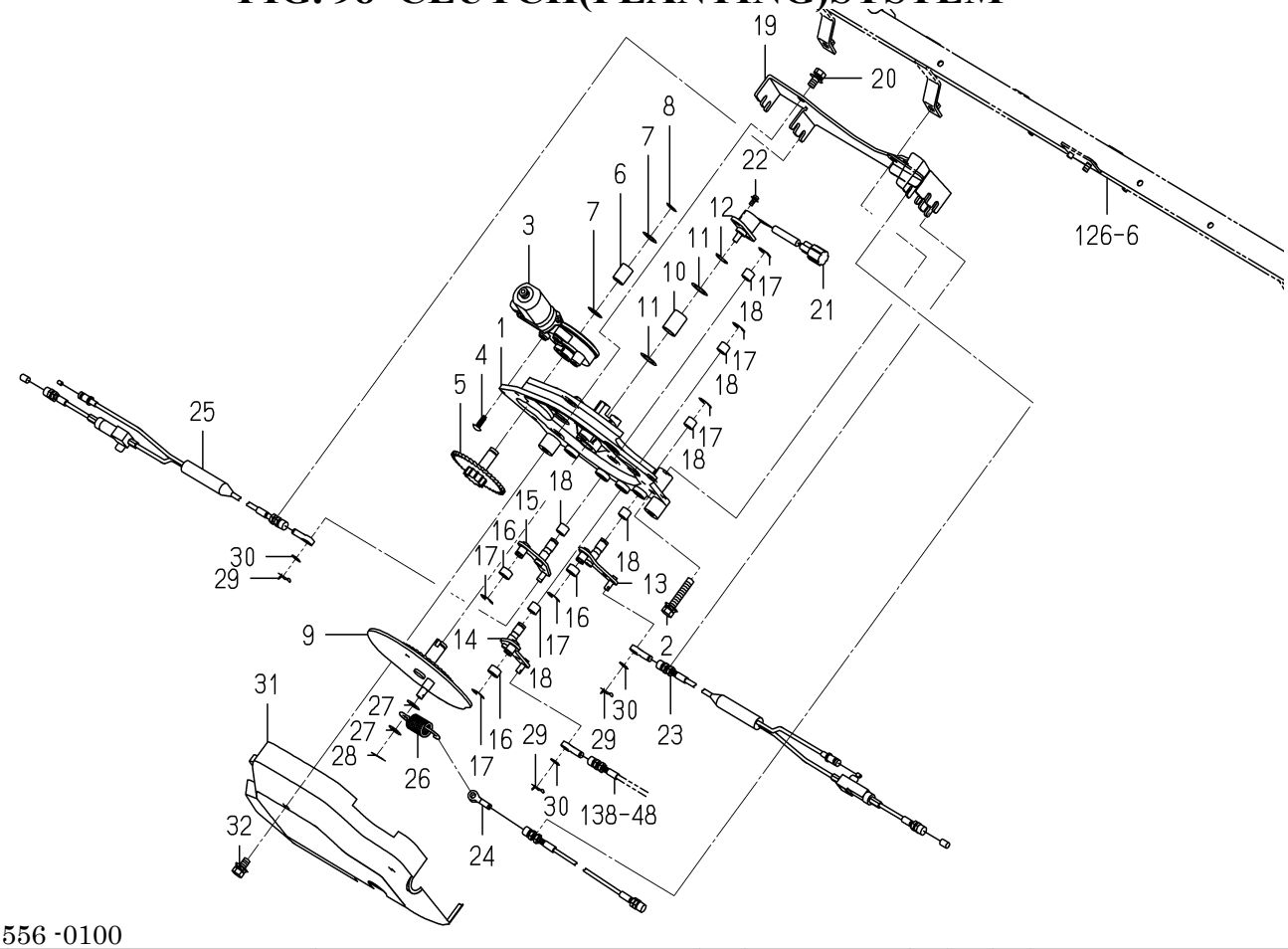

2232-556 -0100

KEY	PART CODE	DESCRIPTION	SPC	TYPE OF MODEL NP60E16		ITC	COL	GRP	REMARKS
1	2232-556-005-30	BASE/MOTOR/CLUTCH	*	1					
2	V211-360-804-50	BOLT/SP	*	2					
3	3888-726-200-00	MOTOR/LH ASSY	*	1					
4	3888-218-001-00	TAPPINGSCREW/M5X16	*	3					
5	2232-556-320-10	SHAFT/RIDGE CLUTCH/C	*	1					
6	2232-556-023-10	BUSH/12X15X20	*	1					
7	8836-703-055-00	WASHER/M12X20X01	*	2					
8	V704-140-012-00	RING,SNAP/12 C	*	1					
9	2232-556-210-00	GEAR/RIDGECLUTC COMP	*	1					
10	2232-556-024-00	BUSH/15X18X25	*	1					
11	3817-493-005-00	WASHER/15X23X01	*	2					
12	V704-140-015-00	RING,SNAP/15 C	*	1					
13	2232-556-270-10	ARM/CLUTCH/1 COMP	*	1					
14	2232-556-280-10	ARM/CLUTCH/2 COMP	*	1					
15	2232-556-290-10	ARM/CLUTCH/3 COMP	*	1					
16	2232-556-001-00	COLLAR/10X14X8	*	3					
17	V710-140-008-00	RING,SNAP/8 E	*	6					
18	2163-802-007-00	BUSH/10X12X10	*	6					
19	2232-556-260-00	PLATE/OUTER COMP	*	1					
20	V211-360-801-60	BOLT,SEMS (SP)	*	2					
21	2232-556-230-00	SENSOR/ANGLE/330	*	1					
22	V120-364-001-00	SCREW/SP	*	2					
23	2232-556-011-10	CABLE/RIDGE CLUTCH/6	*	1					
24	2232-556-012-10	CABLE/RIDGE CLUTCH/6	*	1					
25	2232-556-013-10	CABLE/RIDGE CLUTCH/6	*	1					
26	2232-556-022-00	SPRING/HE060	*	1					
27	2140-420-012-10	WASHER/09X22X02	*	2					
28	V500-162-501-50	PIN,SPLIT/2.5X15	*	1					
29	2161-735-005-00	PIN	*	3					
30	V411-260-006-00	WASHER / M6	*	3					

FIG. 98 CLUTCH(PLANTING)SYSTEM

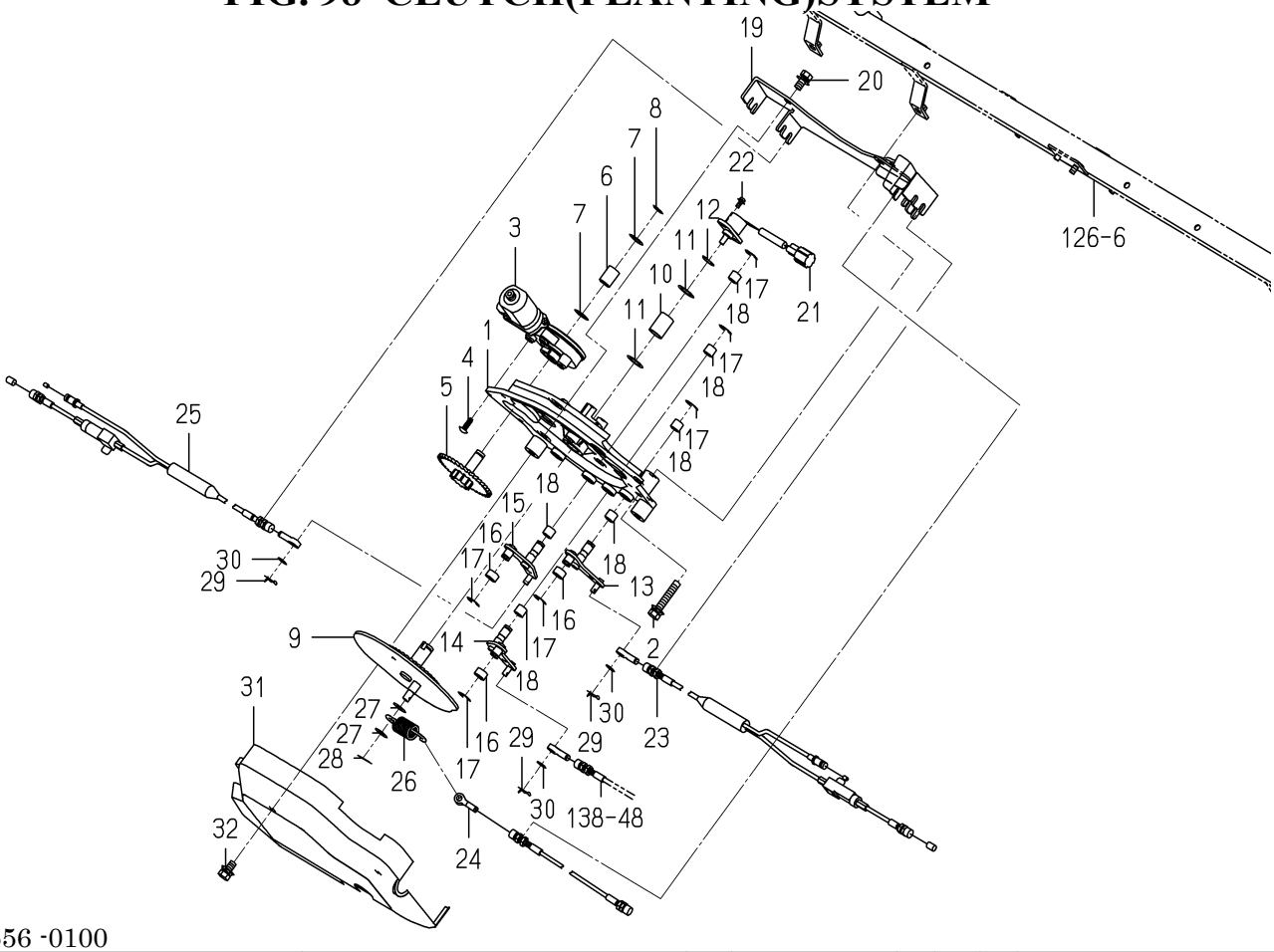

2232-556 -0100

KEY	PART CODE	DESCRIPTION	SPC	TYPE OF MODEL NP60E16		ITC	COL	GRP	REMARKS
31	2232-556-007-00	COVER/RIDGECLUTCH	*	1					
32	V211-360-801-60	BOLT,SEMS (SP)	*	2					

FIG. 99 DRIVE(ROTOR)SYSTEM

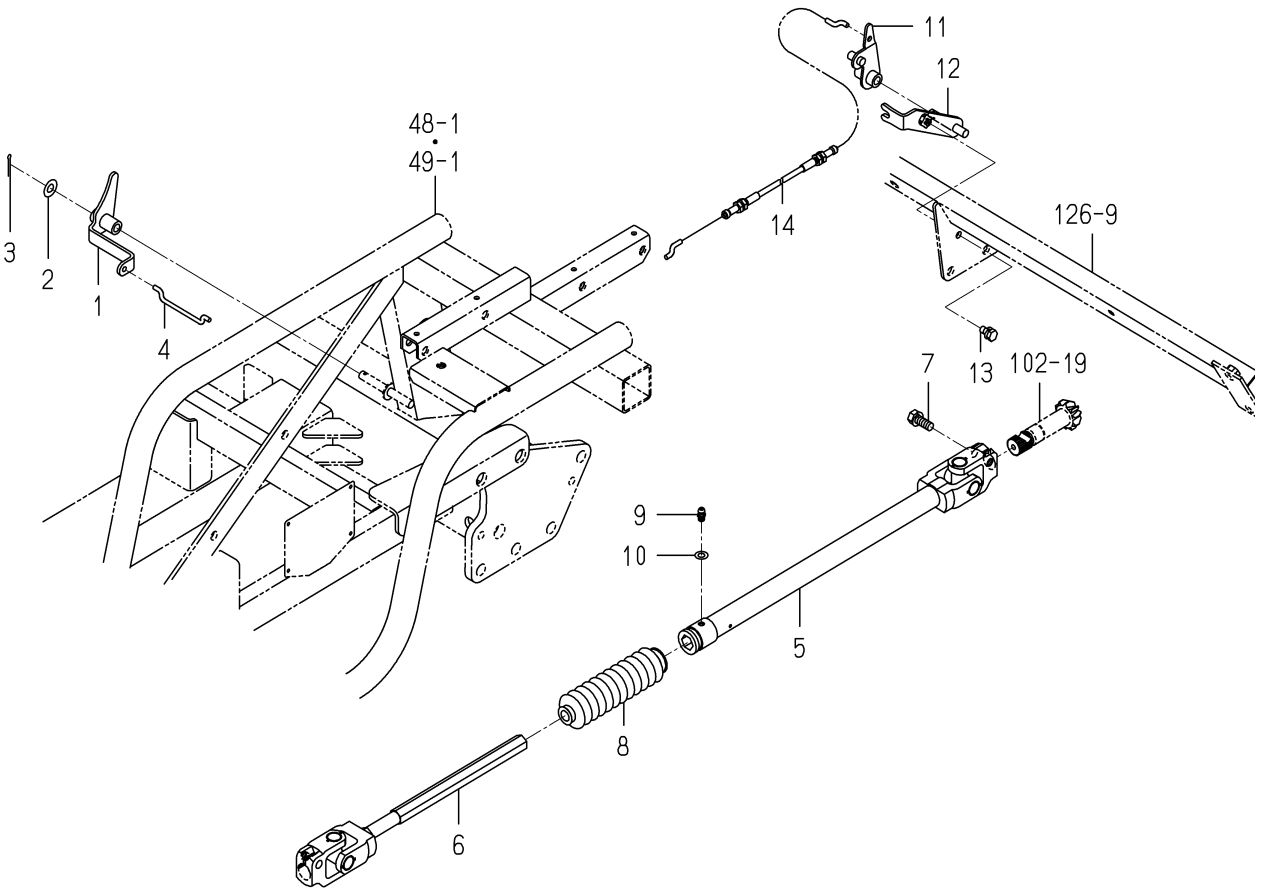

2232-581A-0100

KEY	PART CODE	DESCRIPTION	SPC	TYPE OF MODEL NP60E16		ITC	COL	GRP	REMARKS
1	2232-581-200-10	ARM/CLUCH/ROTOR COMP	*	1					
2	V411-260-008-00	WASHER,PL/M 8	*	1					
3	V500-162-002-00	PIN,SPLIT/2 X20	*	1					
4	2232-581-001-00	ROD/CLUTCH/ROTOR	*	1					
5	2232-581-230-00	SHAFT/ROTOR/REAR/NP	*	1					
6	2213-581-200-00	SHAFT/ROTOR/FRONT/8	*	1					
7	V211-560-802-50	BOLT,SEMS/M8X25 7T	*	1					
8	2204-581-049-00	BOOTS/ROTOR/DRIVE	*	1					
9	V760-150-000-00	NIPPLE,GREASE	*	1					
10	V411-260-006-00	WASHER / M6	*	1					
11	2233-581-200-00	ARM/ROTOR/CLUCH COMP	*	1					
12	2233-581-210-00	PLATE/CABLE COMP	*	1					
13	V210-260-601-20	BOLT/S	*	1					
14	2233-581-002-00	CABLE/ROTOR/CLUCH	*	1					

FIG.100 ROTOR SYSTEM

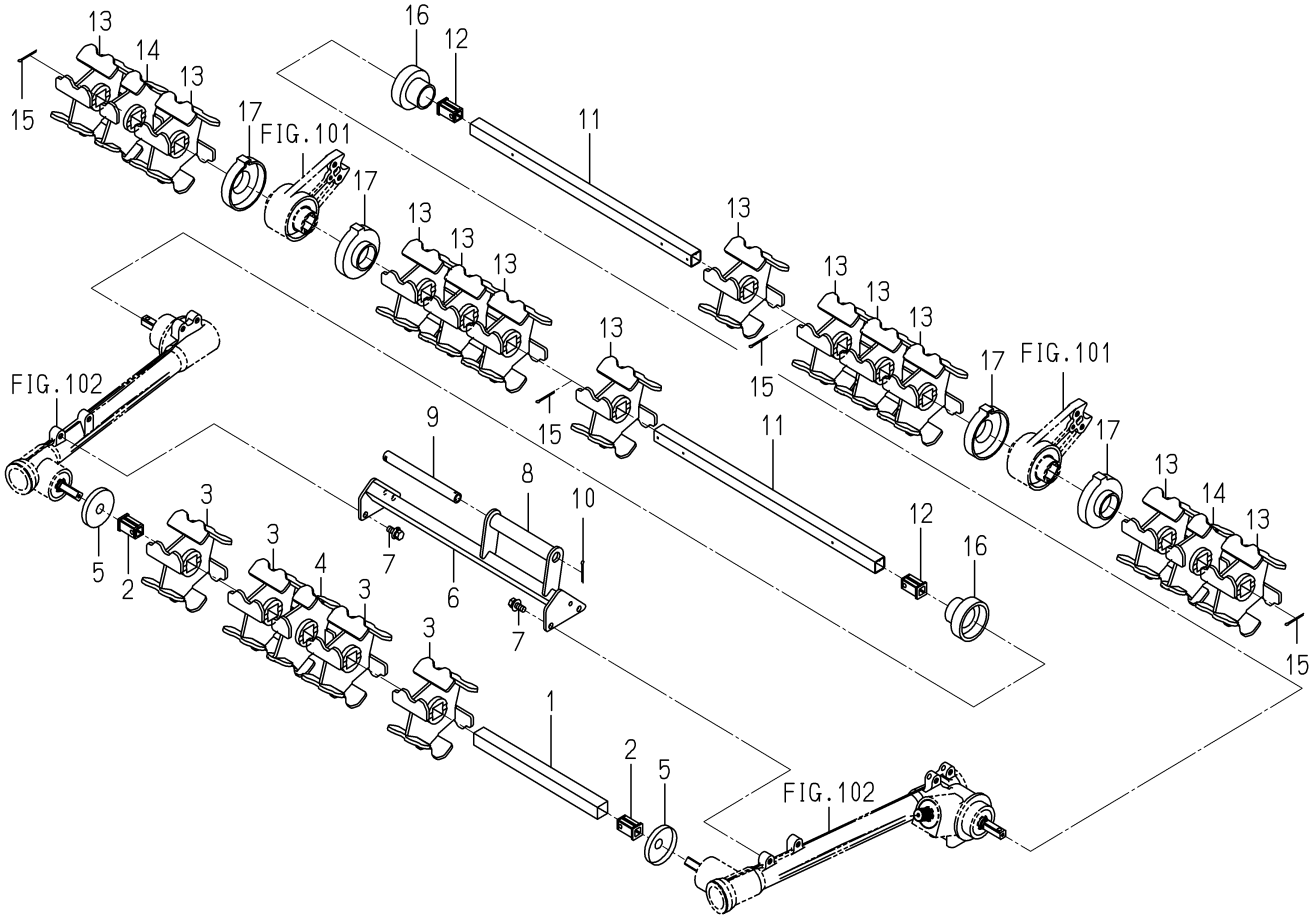

2232-582 -0100

KEY	PART CODE	DESCRIPTION	SPC	TYPE OF MODEL NP60E16		ITC	COL	GRP	REMARKS
1	2204-582-052-00	SHAFT/ROTOR/6/CENTER	*	1					
2	2204-582-055-00	HUB/ROTOR/M	*	2					
3	2204-582-063-00	ROTOR/72/M	*	4					
4	2204-582-062-00	ROTOR/36/M	*	1					
5	2204-582-059-00	COVER/COIL/M	*	2					
6	2232-582-200-00	STAY/ROTOR/CENTER	*	1					
7	V211-360-802-00	BOLT/SP	*	4					
8	2204-582-012-00	ROLLER(ROTARY)	*	1					
9	2232-582-009-00	TUBE/ROLLER	*	1					
10	2204-582-015-00	PIN,SPLIT/3X30/SUS	*	1					
11	2232-582-003-00	SHAFT/ROTOR/6	*	2					
12	2204-582-055-00	HUB/ROTOR/M	*	2					
13	2204-582-063-00	ROTOR/72/M	*	12					
14	2204-582-062-00	ROTOR/36/M	*	2					
15	2204-582-015-00	PIN,SPLIT/3X30/SUS	*	6					
16	2232-582-008-00	BUSH/ROTOR/SIDE	*	2					
17	2232-582-011-00	COLLAR/ROTOR/SIDE	*	4					

FIG.101 CONTROL(DEPTH/ROTOR)SYSTEM

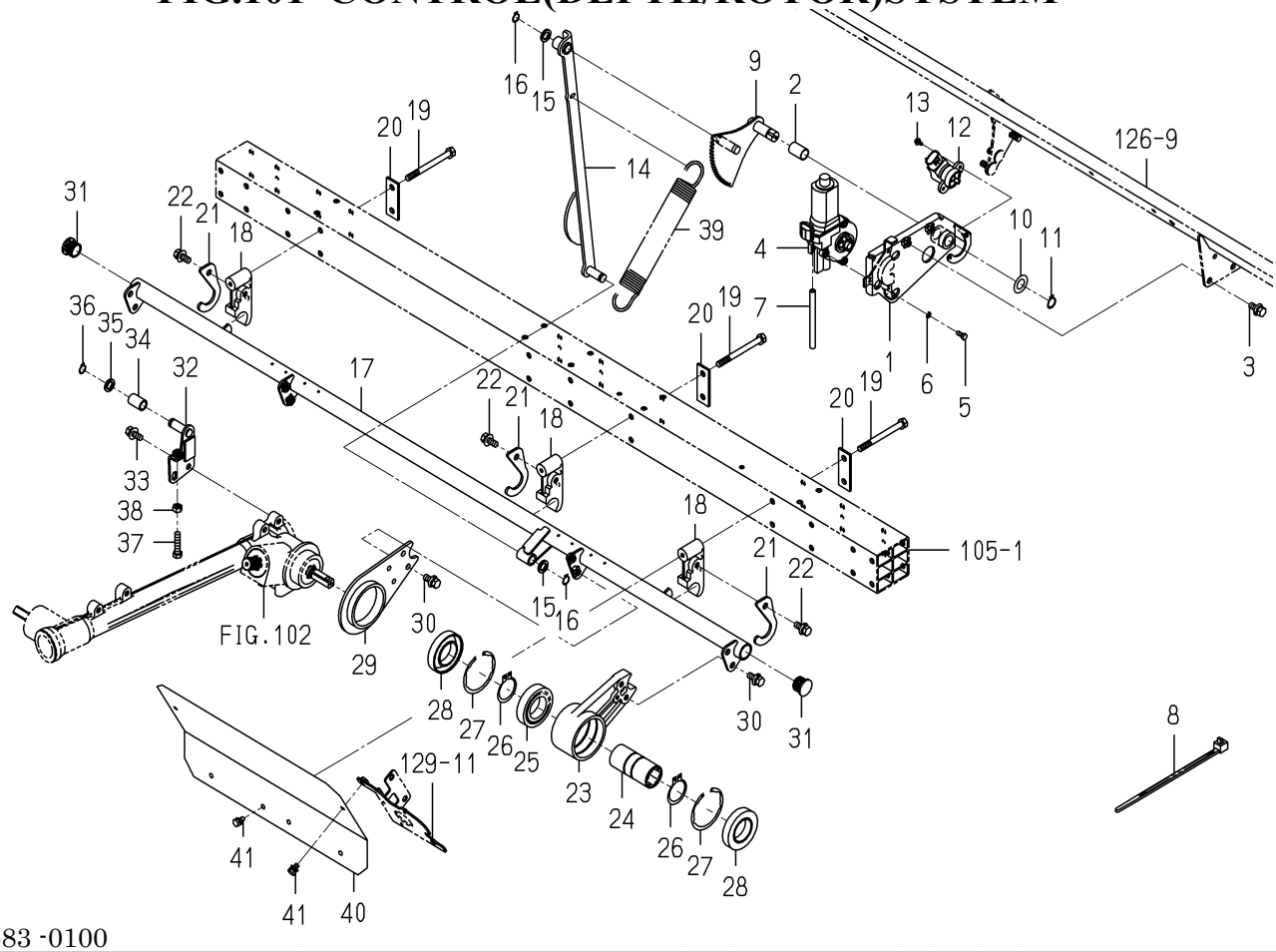

2232-583 -0100

KEY	PART CODE	DESCRIPTION	SPC	TYPE OF MODEL NP60E16		ITC	COL	GRP	REMARKS
1	2232-583-200-20	BASE/MOTOR/ROTO COMP	*	1					
2	2232-583-005-00	BUSH/15X17X25	*	1					
3	V211-360-802-00	BOLT/SP	*	2					
4	2194-543-200-00	MOTER	*	1					
5	V200-260-501-20	BOLT/M 5X12	*	3					
6	V401-160-005-00	WASHER,SP/M 5	*	3					
7	2194-543-001-00	TUBE/100	*	1					
8	2132-545-008-00	WIRE BAND(92)	*	1					
9	2232-583-210-10	GEAR/ROTOR COMP	*	1					
10	3747-342-002-00	WASHER	*	1					
11	V704-140-015-00	RING,SNAP/15 C	*	1					
12	1729-662-330-00	SENSOR/ANGLE/75 ASSY	*	1					
13	V120-364-001-00	SCREW/SP	*	2					
14	2232-583-220-00	ARM/MOTOR/ROTOR COMP	*	1					
15	2130-725-006-00	WASHER	*	2					
16	2145-774-003-00	SNAPRING	*	2					
17	2232-583-240-00	FRAME/ROTOR HEIGHT/6	*	1					
18	2232-583-001-00	STAY/ROTOR	*	3					
19	2232-603-003-00	BOLT/M8X90	*	6					
20	2232-603-002-00	PLATE/I/24X64	*	3					
21	2232-583-016-00	PLATE/HOLDER/ROTOR	*	3					
22	V211-360-802-00	BOLT/SP	*	3					
23	2232-583-003-10	ARM/ROTOR	*	2					
24	2213-583-053-00	HUB/21X35X76	*	2					
25	V600-150-600-70	BEARING,RB/6007SS	*	2					
26	V704-140-035-00	RING,SNAP/35 C	*	4					
27	V707-140-062-00	RING,SNAP/R62	*	4					
28	7827-205-010-00	SEAL/OIL	*	4					
29	2232-583-008-00	PLATE/ARM/ROTOR	*	2					
30	V211-360-802-00	BOLT/SP	*	8					

FIG.101 CONTROL(DEPTH/ROTOR)SYSTEM

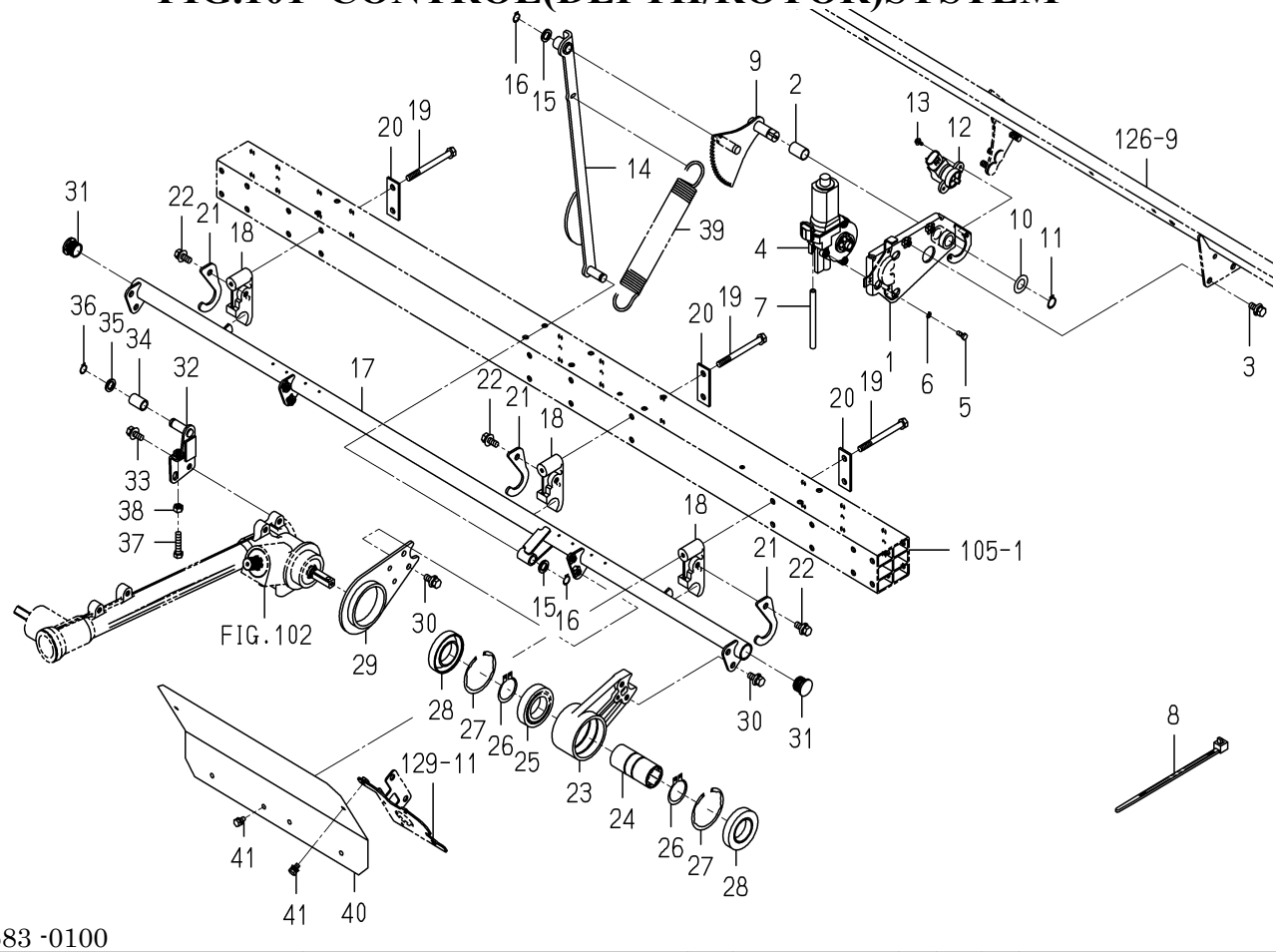

2232-583 -0100

KEY	PART CODE	DESCRIPTION	SPC	TYPE OF MODEL NP60E16		ITC	COL	GRP	REMARKS
31	2213-516-006-00	CAP/22X15	*	2					
32	2232-583-280-10	GUIDE/ROTOR COMP	*	1					
33	V211-360-802-00	BOLT/SP	*	2					
34	2232-583-009-00	COLLAR/12X16X24	*	1					
35	2130-725-006-00	WASHER	*	1					
36	V704-140-012-00	RING,SNAP/12 C	*	1					
37	V201-260-803-50	BOLT/M 8X35	*	1					
38	V304-260-008-00	NUT	*	1					
39	2232-583-004-00	SPRING/HE240	*	1					
40	2232-583-002-10	COVER/ROTOR/6	*	2			5N		
41	V210-360-601-20	BOLT,SEMS	*	4					

FIG.102 CASE(CHAIN)SYSTEM(1/2)

25~30-PLEASE SEE 2/2 PAGE

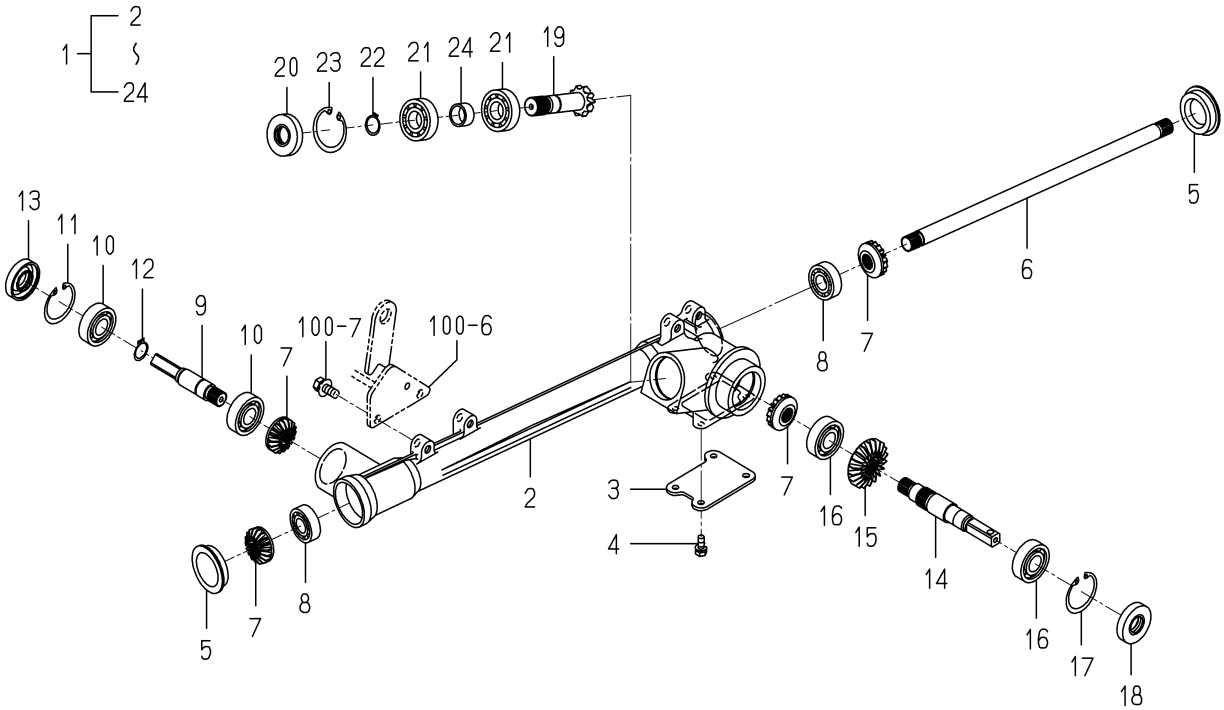

2204-589M-0100

KEY	PART CODE	DESCRIPTION	SPC	TYPE OF MODEL NP60E16		ITC	COL	GRP	REMARKS
1	2204-589-500-00	CASE/CENTERROTOR/LH	*	1					
2	2204-589-051-00	CASE/CENTERROTOR/LH	*	1					
3	2204-589-053-00	COVER/CASE/ROTOR	*	1					
4	V210-560-601-20	BOLT/S	*	4					
5	2204-589-066-00	PLUG/BOA/42	*	2					
6	2204-589-057-10	SHAFT/CENTER ROTOR/D	*	1					
7	2204-589-068-00	GEAR/BEVEL/12/FORGIN	*	4					
8	V600-110-620-20	BEARING,RB/6202	*	2					
9	2204-589-058-10	SHAFT/ROTOR/FRONT	*	1					
10	V600-110-620-30	BEARING,RB/6203	*	2					
11	V705-140-040-00	RING,SNAP/40 C	*	1					
12	V704-140-017-00	RING,SNAP/17 C	*	1					
13	2204-589-065-00	SEAL/OIL	*	1					
14	2204-589-061-10	SHAFT/ROTOR/REAR/LH	*	1					
15	2204-589-063-00	GEAR/BEVEL/20	*	1					
16	V600-110-620-30	BEARING,RB/6203	*	2					
17	V705-140-040-00	RING,SNAP/40 C	*	1					
18	2204-589-065-00	SEAL/OIL	*	1					
19	2204-589-062-00	GEAR/BEVEL/10	*	1					
20	2204-589-065-00	SEAL/OIL	*	1					
21	V600-110-620-30	BEARING,RB/6203	*	2					
22	V704-140-017-00	RING,SNAP/17 C	*	1					
23	V705-140-040-00	RING,SNAP/40 C	*	1					
24	2204-589-067-00	COLLAR/18X22X12	*	1					
25	2204-589-510-00	CASE/CENTERROTOR/RH	*	1					
26	2204-589-052-00	CASE/CENTERROTOR/RH	*	1					
27	2204-589-066-00	PLUG/BOA/42	*	2					
28	2204-589-057-10	SHAFT/CENTER ROTOR/D	*	1					
29	2204-589-068-00	GEAR/BEVEL/12/FORGIN	*	4					
30	V600-110-620-20	BEARING,RB/6202	*	2					

FIG.102 CASE(CHAIN)SYSTEM(2/2)

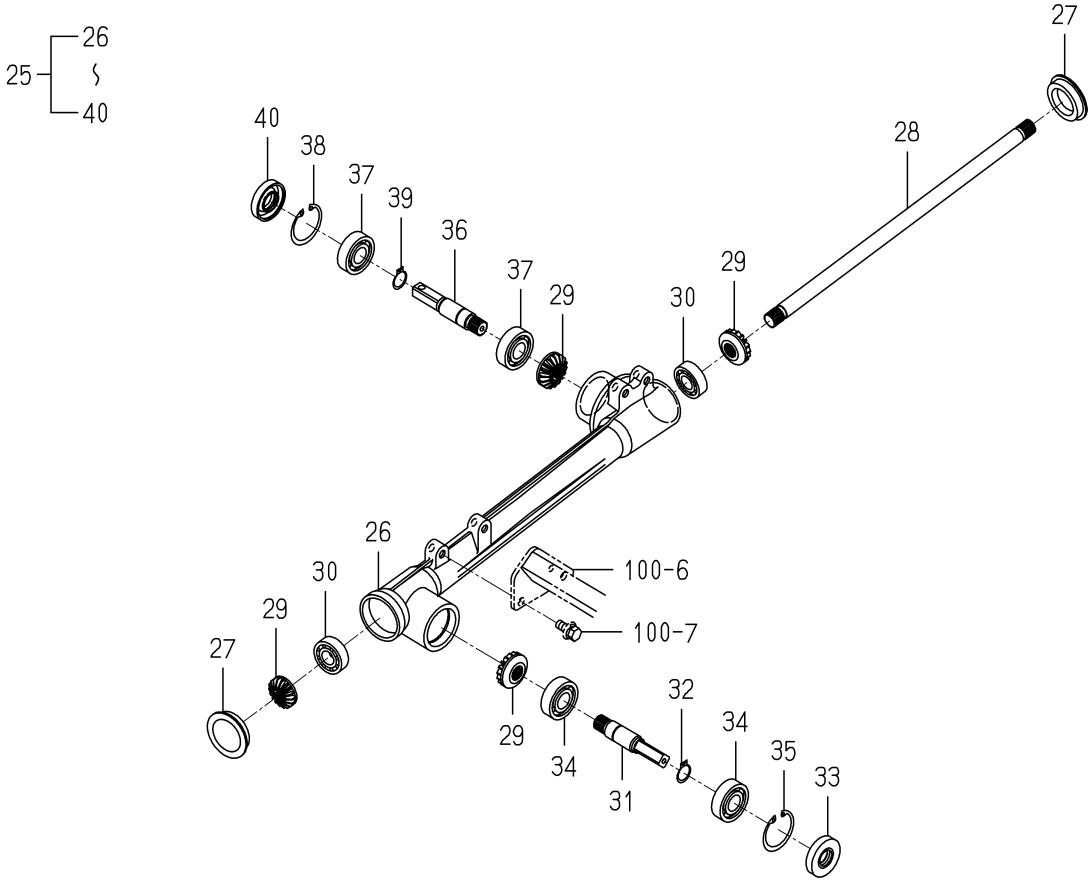

2204-589M-0100

KEY	PART CODE	DESCRIPTION	SPC	TYPE OF MODEL NP60E16		ITC	COL	GRP	REMARKS
31	2204-589-058-10	SHAFT/ROTOR/FRONT	*	1					
32	V704-140-017-00	RING,SNAP/17 C	*	1					
33	2204-589-065-00	SEAL/OIL	*	1					
34	V600-110-620-30	BEARING,RB/6203	*	2					
35	V705-140-040-00	RING,SNAP/40 C	*	1					
36	2204-589-059-10	SHAFT/ROTOR/REAR/RH	*	1					
37	V600-110-620-30	BEARING,RB/6203	*	2					
38	V705-140-040-00	RING,SNAP/40 C	*	1					
39	V704-140-017-00	RING,SNAP/17 C	*	1					
40	2204-589-065-00	SEAL/OIL	*	1					

FIG.103 LIFT SYSTEM

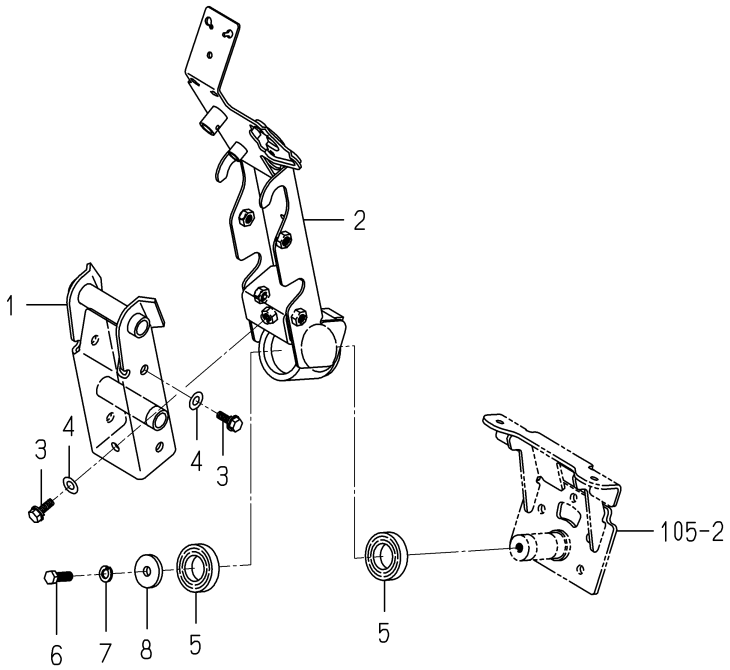

2232-601 -0100

KEY	PART CODE	DESCRIPTION	SPC	TYPE OF MODEL NP60E16		ITC	COL	GRP	REMARKS
1	2232-601-200-10	LIFT COMP	*	1					
2	2232-601-210-40	HITCH COMP	*	1					
3	2194-338-003-20	BOLT/M10X25	*	5					
4	V411-260-010-00	WASHER/M10	*	5					
5	V600-150-600-60	BEARING,RB/6006SS	*	2					
6	V201-361-003-00	BOLT/M10X30	*	1					
7	V401-160-010-00	WASHER,SP/M10	*	1					
8	2142-101-005-00	WASHER	*	1					

FIG.104 STOPPER(ROLLING)SYSTEM

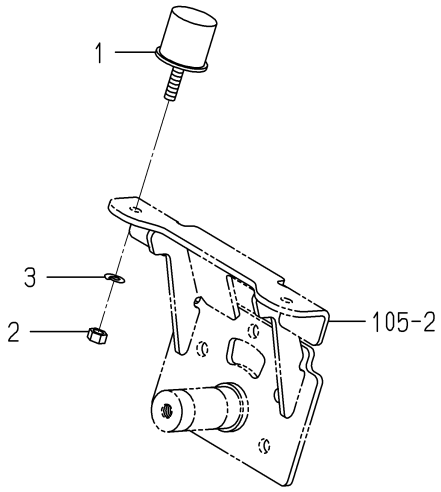

2232-602 -0100

KEY	PART CODE	DESCRIPTION	SPC	TYPE OF MODEL NP60E16		ITC	COL	GRP	REMARKS
1	2220-618-002-10	STOPPER/ROLLING/6V	*	2					
2	V304-260-008-00	NUT	*	2					
3	V401-160-008-00	WASHER,SP/M 8	*	2					

FIG.105 FRAME(PLANTING)SYSTEM

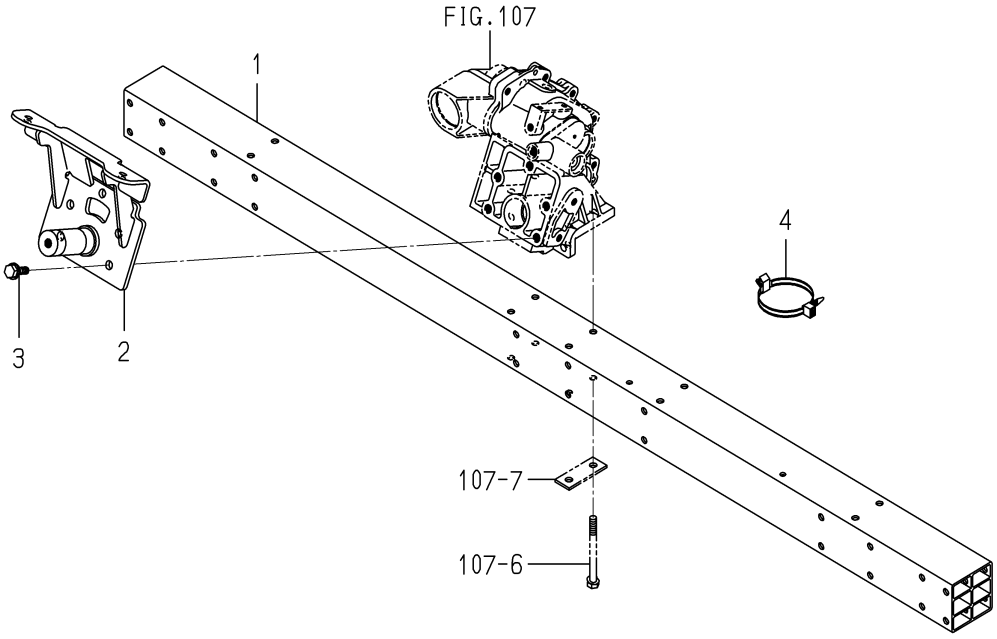

2232-603 -0100

KEY	PART CODE	DESCRIPTION	SPC	TYPE OF MODEL NP60E16		ITC	COL	GRP	REMARKS
1	2232-603-004-00	RAIL/PLANTING/6	*	1					
2	2232-603-200-10	BRACKET/ROLLING COMP	*	1					
3	2194-338-003-20	BOLT/M10X25	*	5					
4	1560-666-004-00	BAND	*	2					

FIG.106 LINK(FLOAT)SYSTEM

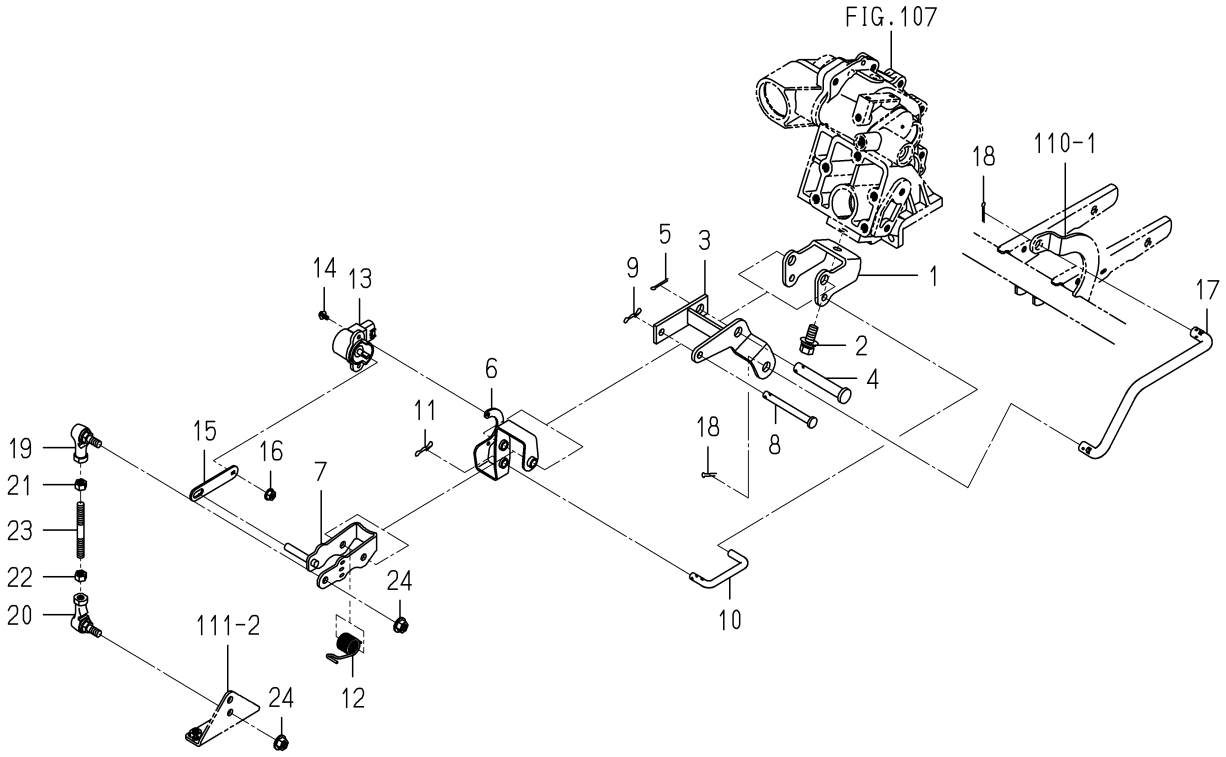

2232-605 -0100

KEY	PART CODE	DESCRIPTION	SPC	TYPE OF MODEL NP60E16		ITC	COL	GRP	REMARKS
1	2232-605-007-00	STAY/ANGLE	*	1					
2	V211-361-002-50	BOLT/SP	*	1					
3	2232-605-210-30	STAY/FLOAT/CENTER	*	1					
4	2232-605-008-00	PIN/12X82	*	1					
5	V500-163-002-00	PIN,SPLIT/3 X20	*	1					
6	2232-605-240-00	PLATE/LINK/SENSOR	*	1					
7	2232-605-230-20	ARM/EFLOATSENSE COMP	*	1					
8	2137-330-004-00	PIN,FLOAT	*	1					
9	2161-735-006-00	PIN	*	1					
10	2232-605-012-00	ROD/LINK	*	1					
11	2161-735-006-00	PIN	*	1					
12	2232-605-011-00	SPRING/HT018	*	1					
13	1729-662-340-00	SENSOR/ANGLE/110/R	*	1					
14	V120-364-001-00	SCREW/SP	*	2					
15	2232-605-010-00	PLATE/SENSOR/FLOAT	*	1					
16	V360-260-006-00	NUT/M6	*	1					
17	2232-605-006-10	ROD/ANGLE	*	1					
18	V500-163-002-00	PIN,SPLIT/3 X20	*	2					
19	1560-695-021-00	JOINT BALL M08RH	*	1					
20	1560-695-022-00	JOINT BALL M08LH	*	1					
21	V304-260-008-00	NUT	*	1					
22	1560-132-007-30	NUT/M8	*	1					
23	2232-605-016-00	ROD/FLOAT	*	1					
24	V362-260-008-00	NUT/WASHER	*	2					

FIG.107 LINK(FLOAT)SYSTEM

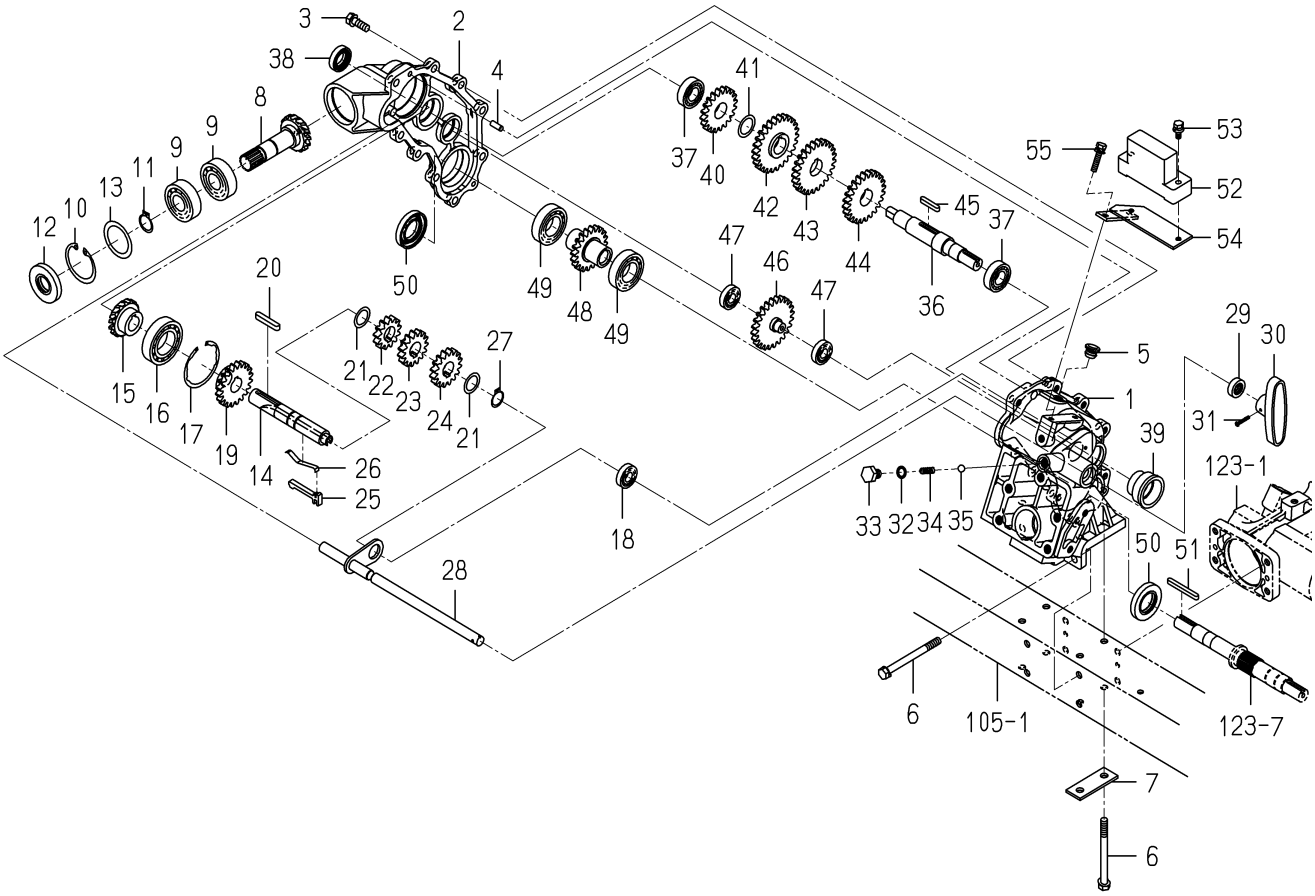

2232-607A-0100

KEY	PART CODE	DESCRIPTION	SPC	TYPE OF MODEL NP60E16		ITC	COL	GRP	REMARKS
1	2232-607-001-10	CASE/SEND/LH	*	1					
2	2232-607-002-00	CASE/SEND/LH	*	1					
3	V211-260-802-50	BOLT/S	*	9					
4	V522-100-601-60	PIN	*	2					
5	2142-736-236-00	PLUG	*	1					
6	2232-603-003-00	BOLT/M8X90	*	6					
7	2232-603-002-00	PLATE/I/24X64	*	2					
8	2232-607-003-10	SHAFT/PLANTING/IN	*	1					
9	V600-110-620-40	BEARING,RB/6204	*	2					
10	V705-140-047-00	RING,SNAP/47 C	*	1					
11	V704-140-020-00	RING,SNAP/20 C	*	1					
12	V744-120-470-70	SEAL,OIL/TC20477	*	1					
13	2232-607-027-00	SHIM/35X47X0.2	*	1					
14	2232-607-004-00	SHAFT/SEND	*	1					
15	2232-607-019-10	GEAR/BEVEL/15	*	1					
16	V600-110-600-60	BEARING,RB 6006	*	1					
17	V707-140-055-00	RING,SNAP/R55	*	1					
18	V600-110-600-10	BEARING,RB/6001	*	1					
19	2232-607-005-20	GEAR/SPUR/20	*	1					
20	3565-403-008-00	KEY,CARRIER STAR	*	1					
21	3555-404-008-00	COLLAR, CARRIER	*	2					
22	2232-607-008-00	GEAR/SPUR/13/24TIMES	*	1					
23	2232-607-009-00	GEAR/SPUR/15/20TIMES	*	1					
24	2232-607-011-00	GEAR/SPUR/16/18TIMES	*	1					
25	2213-607-041-10	KNOCK/SEND/PZ8	*	1					
26	2213-607-042-20	SPRING/SEND/PZ8	*	1					
27	V704-140-018-00	RING,SNAP/18 C	*	1					
28	2232-607-210-00	SHIFTER/SEND COMP	*	1					
29	V744-112-220-70	SEAL,OIL TC122207	*	1					
30	2130-610-012-00	LEVER	*	1					

FIG.107 LINK(FLOAT)SYSTEM

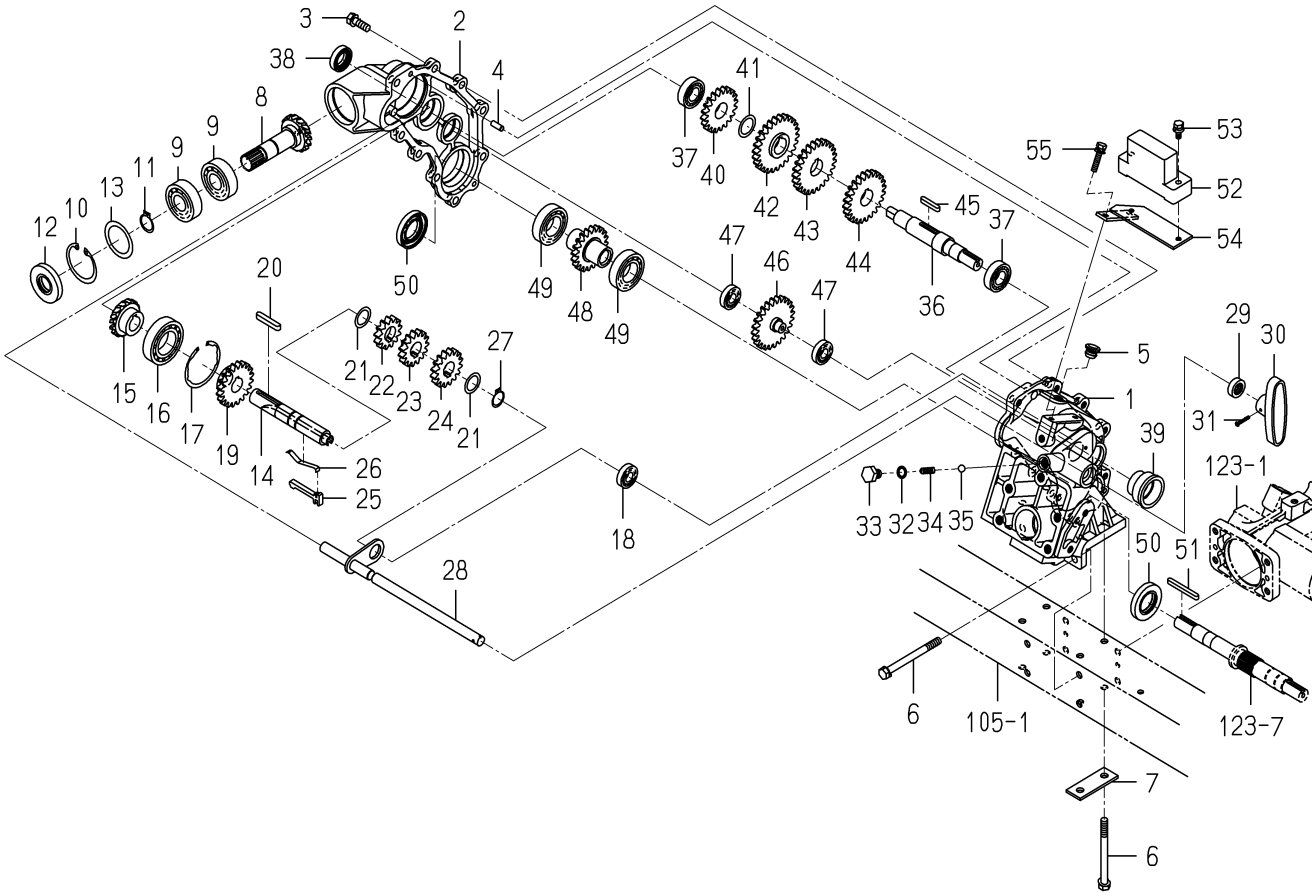

2232-607A-0100

KEY	PART CODE	DESCRIPTION	SPC	TYPE OF MODEL NP60E16		ITC	COL	GRP	REMARKS
31	V111-163-002-00	SCREW M3X20	*	1					
32	V720-101-901-00	O-RING/P10	*	1					
33	2201-201-002-00	BOLT/M10X12	*	1					
34	2213-422-022-00	SPRING/HC021	*	1					
35	V682-200-001-00	BALL	*	1					
36	2232-607-012-00	SHAFT/COUNTER/SEND	*	1					
37	V600-110-600-30	BEARING,RB/6003	*	2					
38	V744-117-300-70	SEAL,OIL/TC17307	*	1					
39	2204-607-022-00	SEAL,OIL	*	1					
40	2232-607-020-00	GEAR/SPUR/20	*	1					
41	2110-325-003-00	SHIM,SAFETY CLUTCH	*	1					
42	2232-607-014-00	GEAR/SPUR/26/24TIMES	*	1					
43	2232-607-015-00	GEAR/SPUR/25/20TIMES	*	1					
44	2232-607-016-00	GEAR/SPUR/24/18TIMES	*	1					
45	1308-230-002-00	KEY	*	1					
46	2232-607-017-10	GEAR/SPUR/24	*	1					
47	V600-110-600-10	BEARING,RB/6001	*	2					
48	2232-607-018-00	GEAR/SPUR/20	*	1					
49	V600-110-600-50	BEARING,RB/6005	*	2					
50	V744-125-450-70	SEAL,OIL/TC25457	*	2					
51	2232-702-003-00	KEY/05X05X50	*	1					
52	1690-505-240-00	SENSOR/SLOPE ASSY	*	1					
53	V210-360-603-00	BOLT/SP	*	2					
54	2232-607-230-00	STAY/SENSOR/SLOPE	*	1					
55	V210-360-601-60	BOLT(SP)/M6X16	*	2					

FIG.108 CAM(LEAD)SYSTEM

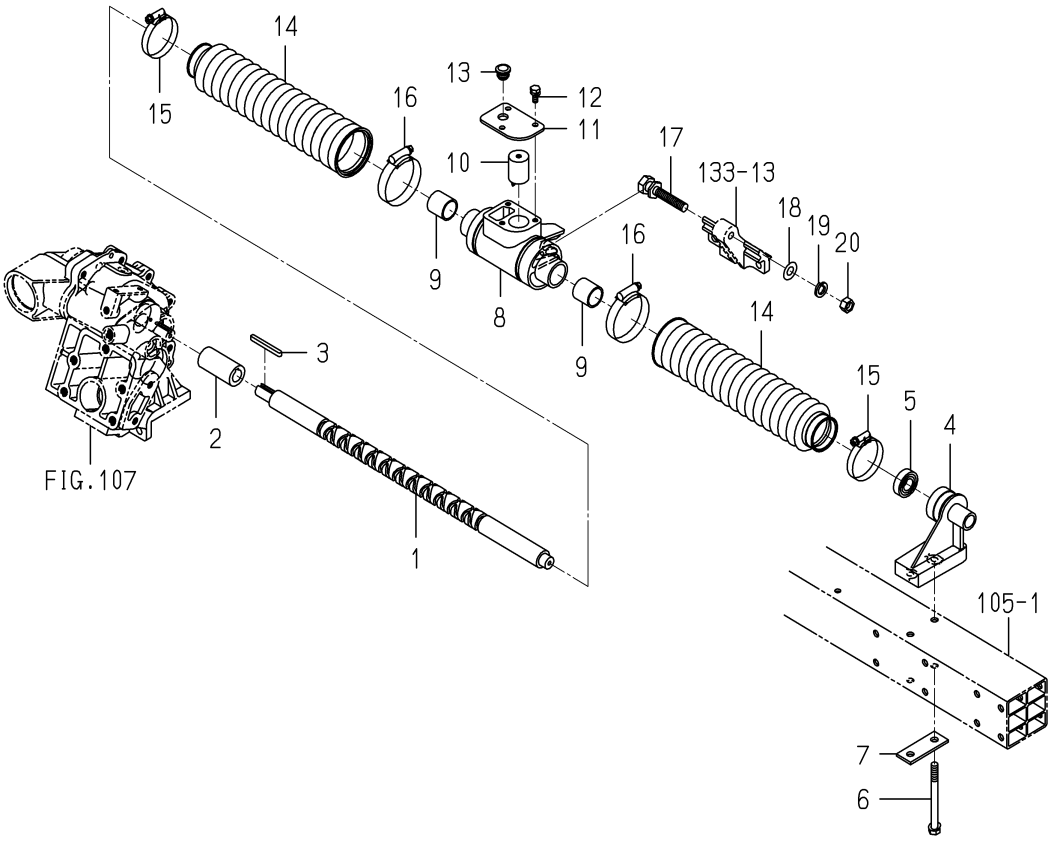

2232-608 -0100

KEY	PART CODE	DESCRIPTION	SPC	TYPE OF MODEL NP60E16		ITC	COL	GRP	REMARKS
1	2232-608-006-00	CAM/LEAD	*	1					
2	2232-608-018-00	COUPLING/DRAIVE	*	1					
3	2232-702-003-00	KEY/05X05X50	*	1					
4	2232-608-005-20	HOLDER/LEADCAM	*	1					
5	V600-150-600-20	BEARING,RB/6002SS	*	1					
6	2232-603-003-00	BOLT/M8X90	*	2					
7	2232-603-002-00	PLATE/I/24X64	*	1					
8	2232-608-001-00	METAL/CAM/LEAD	*	1					
9	2232-608-007-00	BUSH/22X26X25	*	2					
10	2232-608-014-00	CATCH/LEAD	*	1					
11	2232-608-010-00	PLATE/LID	*	1					
12	V210-260-601-60	BOLT/S	*	3					
13	2142-736-236-00	PLUG	*	1					
14	2232-608-008-00	BOOT/CAM/LEAD	*	2					
15	J061-132-050-00	CLAMP/WORM/32-50	*	2					
16	J061-144-060-00	CLAMP/WORM/44-60	*	2					
17	2232-608-009-00	BOLT/JOINT	*	1					
18	V410-260-010-00	WASHER,PL/M10	*	1					
19	V401-160-010-00	WASHER,SP/M10	*	1					
20	V304-260-010-00	NUT	*	1					

FIG.109 CAM(SEEDLING)SYSTEM

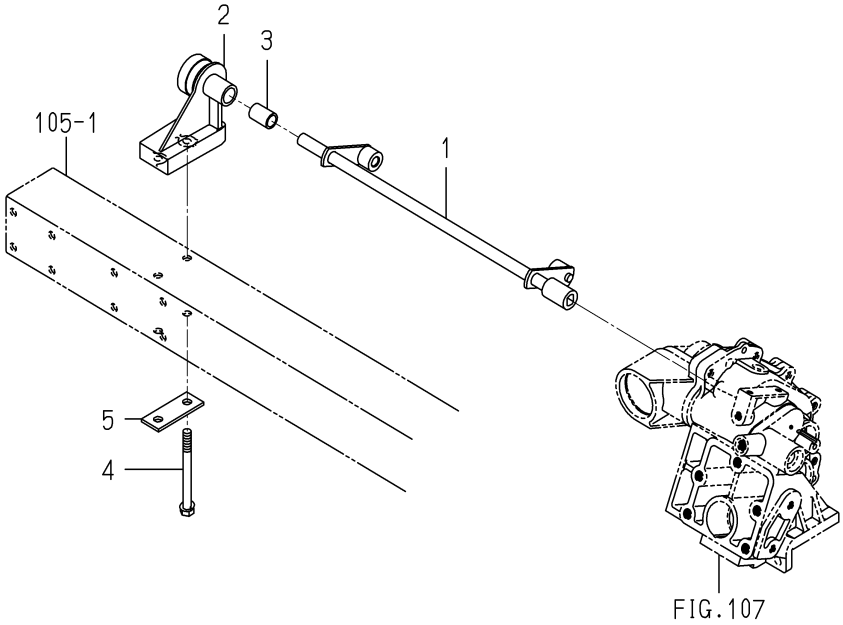

2232-612 -0100

KEY	PART CODE	DESCRIPTION	SPC	TYPE OF MODEL NP60E16		ITC	COL	GRP	REMARKS
1	2232-612-200-00	CAM/SEND/6 COMP	*	1					
2	2232-608-005-20	HOLDER/LEADCAM	*	1					
3	2161-612-002-10	BUSH/12X16X24	*	1					
4	2232-603-003-00	BOLT/M8X90	*	2					
5	2232-603-002-00	PLATE/I/24X64	*	1					

FIG.110 LEVER(DEPTH/PLANTING)SYSTEM

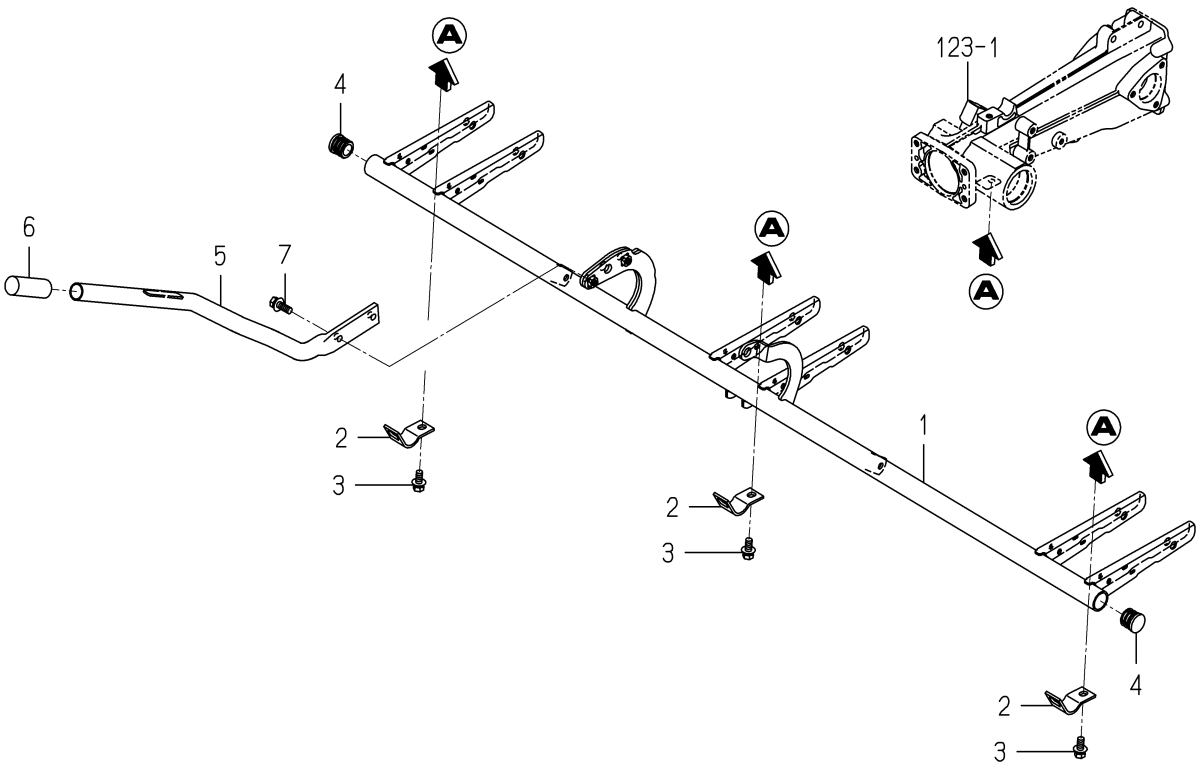

2232-614 -0100

KEY	PART CODE	DESCRIPTION	SPC	TYPE OF MODEL NP60E16		ITC	COL	GRP	REMARKS
1	2232-614-200-30	FRAME/DEPTH/6 COMP	*	1					
2	2232-614-001-00	PLATE/HOLDER/DEPTH	*	3					
3	V211-360-802-00	BOLT/SP	*	3					
4	2232-614-003-00	CAP/24X18	*	2					
5	2232-614-210-00	LEVER/DEPTH COMP	*	1					
6	2183-613-003-00	GRIP	*	1					
7	V211-360-802-50	BOLT/SP	*	2					

FIG.111 FLOAT(CENTER)SYSTEM

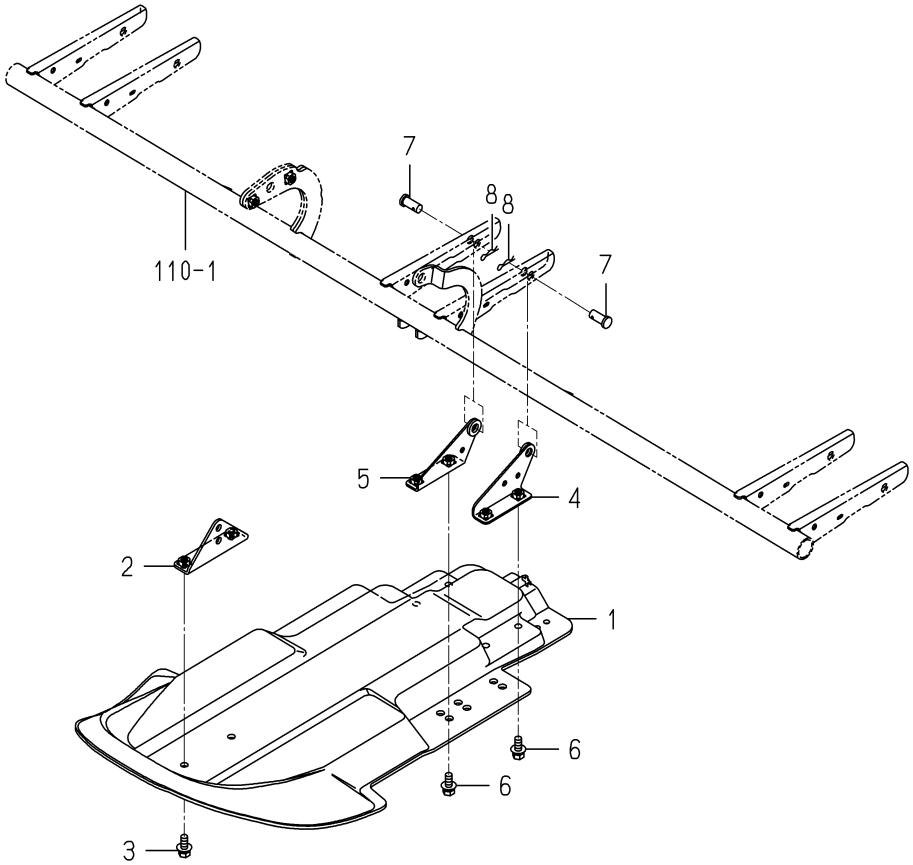

2232-616 -0100

KEY	PART CODE	DESCRIPTION	SPC	TYPE OF MODEL NP60E16		ITC	COL	GRP	REMARKS
1	2232-616-001-00	FLOAT/CENTER/6	*	1					
2	2232-616-220-10	PLATE/CENTER/FLOAT	*	1					
3	V211-360-802-00	BOLT/SP	*	2					
4	2232-616-200-00	STAY/CENTERFLOA COMP	*	1					
5	2232-616-230-00	STAY/CENTERFLOA COMP	*	1					
6	V211-360-802-00	BOLT/SP	*	4					
7	2120-409-004-00	PIN	*	2					
8	3505-704-003-00	PIN,HAIR (10)	*	2					

FIG.112 ADJUSTMENT(ROLLING)SYSTEM

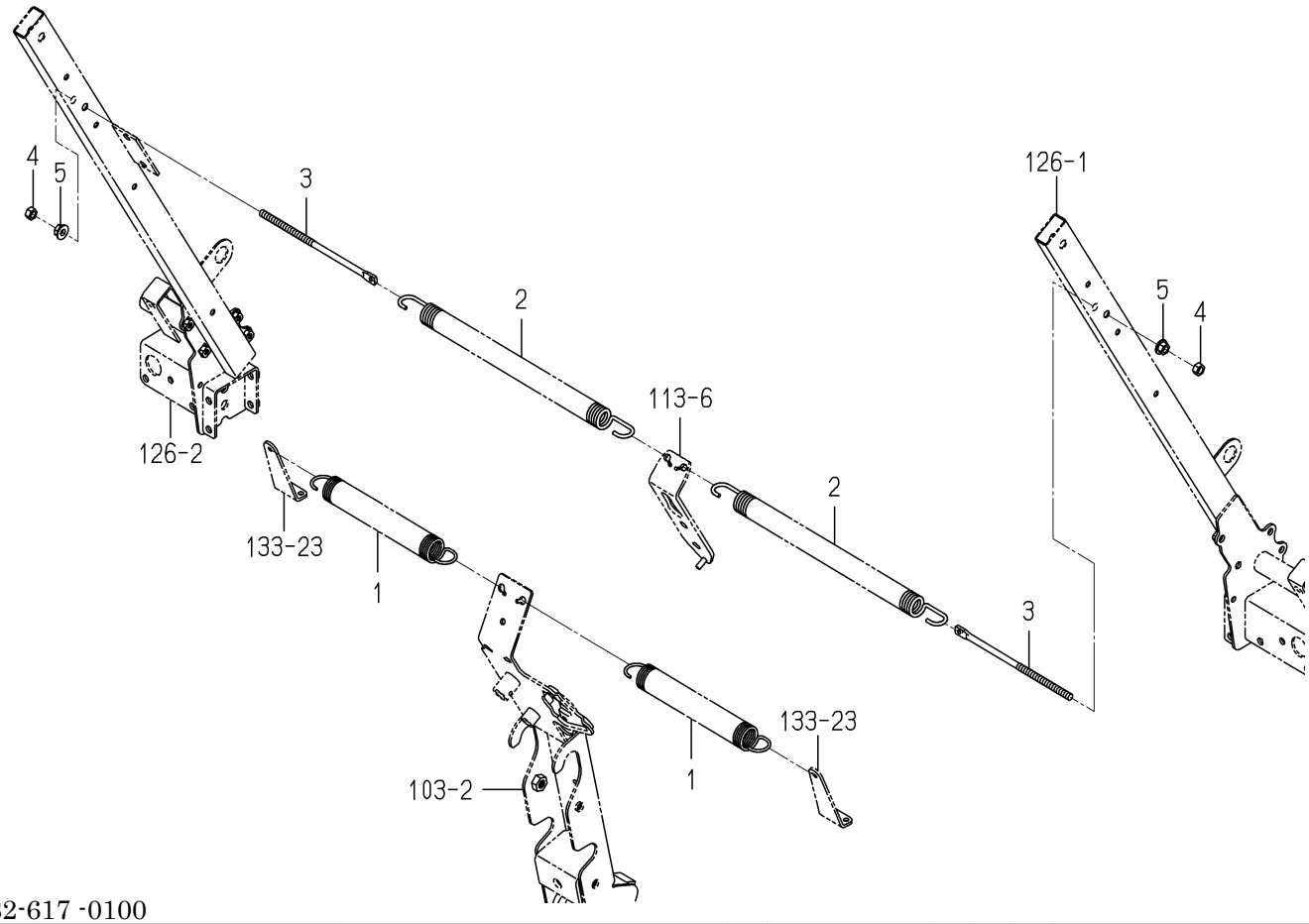

2232-617 -0100

KEY	PART CODE	DESCRIPTION	SPC	TYPE OF MODEL NP60E16		ITC	COL	GRP	REMARKS
1	2146-640-001-60	SPRING/HE232	*	2					
2	2163-617-004-00	SPRING/HE385	*	2					
3	2232-617-002-00	ROD/M8X195	*	2					
4	V304-260-008-00	NUT	*	2					
5	V362-260-008-00	NUT/WASHER	*	2					

FIG.113 AUTOMATIC(ROLLING)SYSTEM

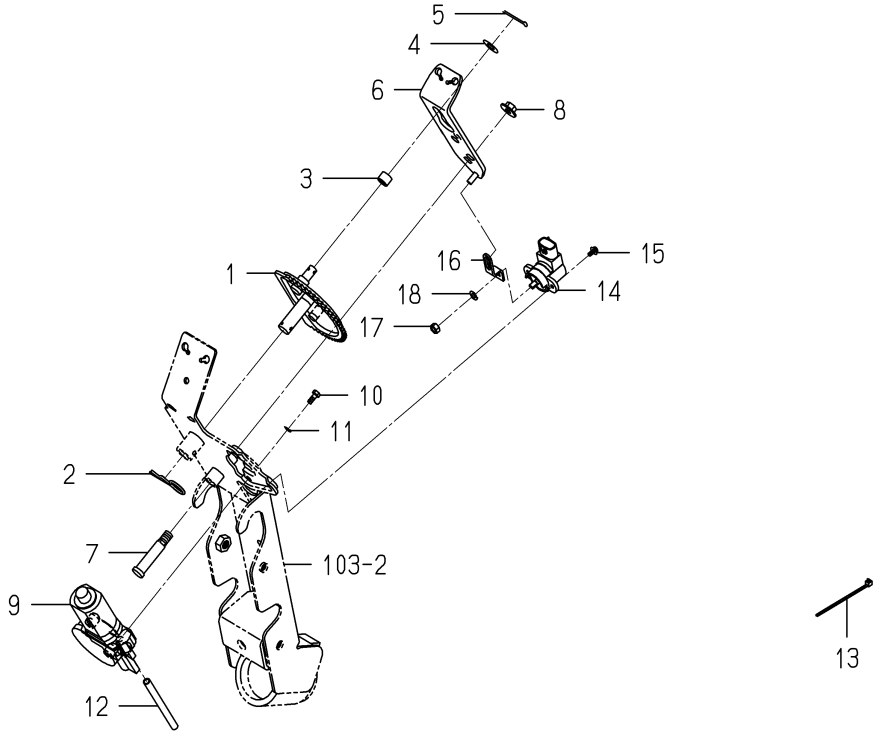

2232-618 -0100

KEY	PART CODE	DESCRIPTION	SPC	TYPE OF MODEL NP60E16		ITC	COL	GRP	REMARKS
1	2204-618-200-30	GEAR/ROLLING COMP	*	1					
2	7957-405-003-00	PIN/HAIR	*	1					
3	2204-618-002-00	COLLER/10X14X10	*	1					
4	V411-260-010-00	WASHER/M10	*	1					
5	V500-163-002-00	PIN,SPLIT/3 X20	*	1					
6	2232-618-220-00	PLATE/ROLLING COMP	*	1					
7	2204-618-008-00	PIN(RORING)	*	1					
8	V363-260-010-00	NUT/M10	*	1					
9	2194-543-200-00	MOTER	*	1					
10	V200-260-501-20	BOLT/M 5X12	*	3					
11	V401-160-005-00	WASHER,SP/M 5	*	3					
12	2194-543-001-00	TUBE/100	*	1					
13	2132-545-008-00	WIRE BAND(92)	*	1					
14	1729-662-340-00	SENSOR/ANGLE/110/R	*	1					
15	V120-364-001-00	SCREW/SP	*	2					
16	2232-618-004-00	SENSORARM/ROLLING	*	1					
17	V301-260-006-00	NUT/M6	*	1					
18	V401-160-006-00	WASHER,SP/M 6	*	1					

FIG.114 RAKE SYSTEM

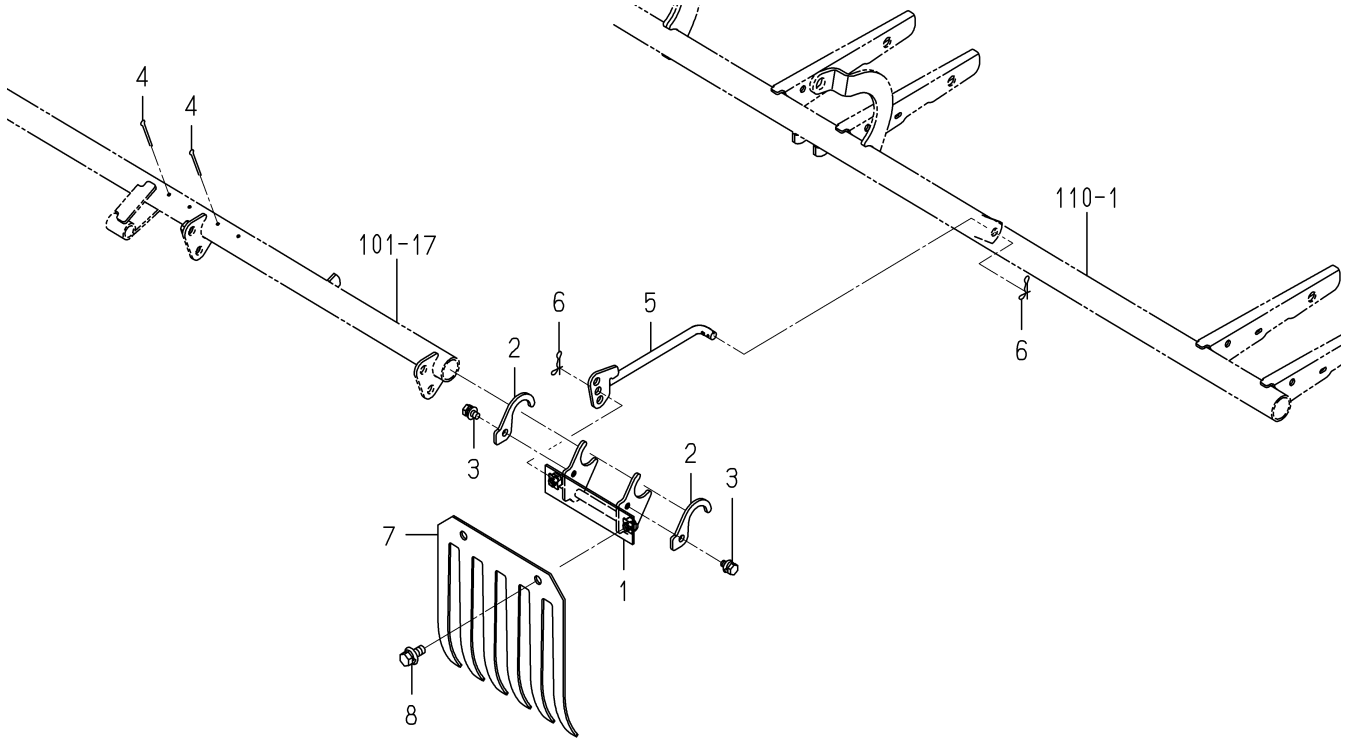

2232-619 -0100

KEY	PART CODE	DESCRIPTION	SPC	TYPE OF MODEL NP60E16		ITC	COL	GRP	REMARKS
1	2232-619-240-00	RAKE/CENTER COMP	*	2					
2	2232-619-002-00	PLATE/HOLDER	*	4					
3	V210-360-601-20	BOLT,SEMS	*	4					
4	2204-582-015-00	PIN,SPLIT/3X30/SUS	*	4					
5	2232-619-260-10	ROD/LAKE COMP	*	2					
6	2161-735-006-00	PIN	*	4					
7	2232-619-003-20	RAKE/CENTER	*	2					
8	V120-368-002-00	BOLT/M8X20	*	4					

FIG.115 DRIVE(FERTILIZER)SYSTEM(G TYPE)(1/2)

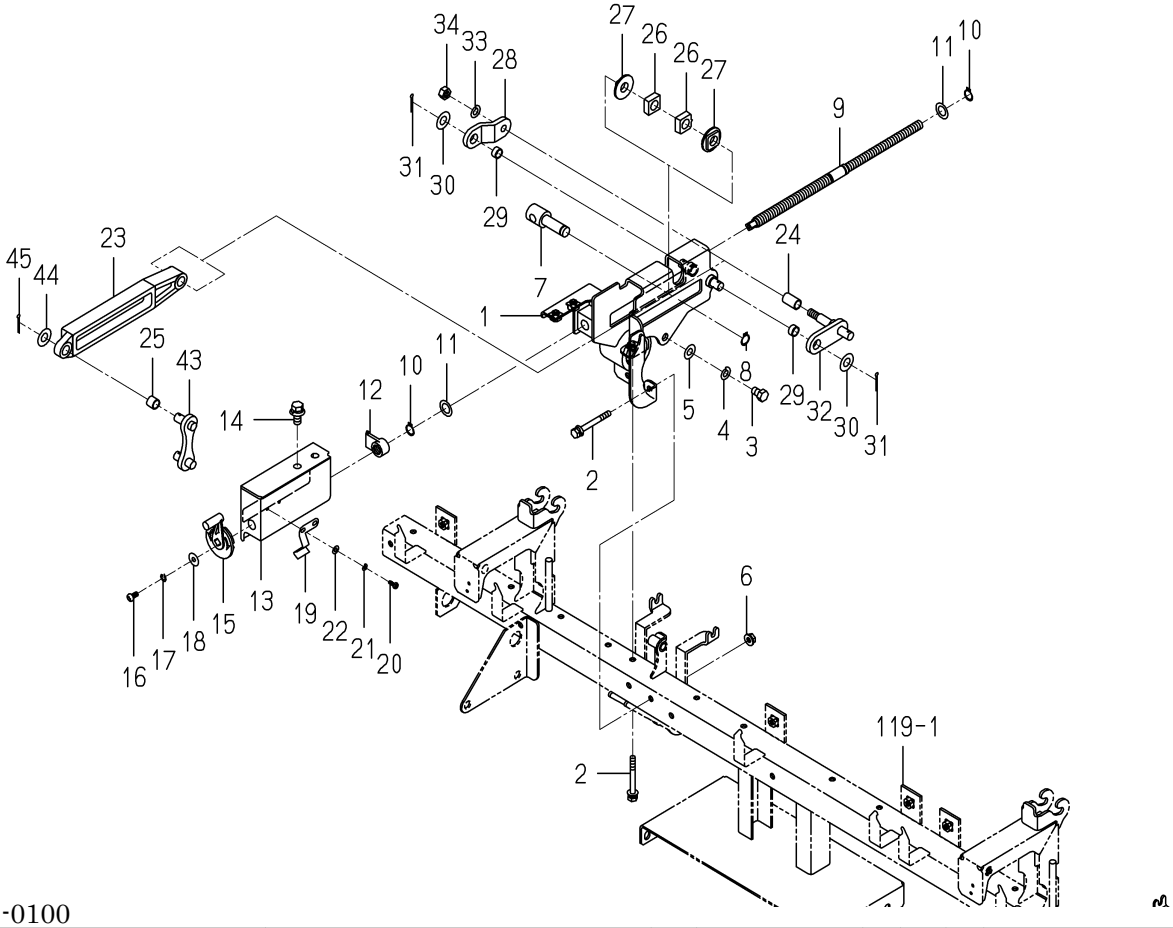

2232-646 -0100

KEY	PART CODE	DESCRIPTION	SPC	TYPE OF MODEL NP60E16		ITC	COL	GRP	REMARKS
1	2232-645-320-40	PLATE/ADJUST COMP	*	1					
2	2232-645-022-00	BOLT/SPM6X55/G	*	3					
3	V201-700-801-20	BOLT	*	1					
4	V401-700-008-00	WASHER/LOCK	*	1					
5	V411-700-008-00	WASHER	*	1					
6	2204-803-068-00	NUT/WASER/M6/SUS	*	2					
7	2232-645-015-10	PIVOT/DIAL	*	1					
8	2145-774-003-00	SNAPRING	*	1					
9	2232-645-011-10	ROD/DIALADJUST	*	1					
10	2145-774-003-00	SNAPRING	*	2					
11	8836-703-055-00	WASHER/M12X20X01	*	2					
12	2232-645-013-00	NUT/ADJUST	*	1					
13	2232-645-018-00	GUIDE/ADJUSUT	*	1					
14	2232-645-023-00	BOLT/SP/M8X20/G	*	2					
15	2232-645-007-00	HANDLE/ADJUST	*	1					
16	V111-705-001-00	SCREW	*	1					
17	V401-700-005-00	WASHER/LOCK	*	1					
18	8843-404-009-00	WASHER/05X16X01	*	1					
19	8843-404-006-00	SPRING	*	1					
20	8844-405-028-00	SCREW/04	*	2					
21	V401-700-004-00	WASHER/LOCK	*	2					
22	V411-700-004-00	WASHER	*	2					
23	2232-645-012-00	ARM/ADJUST	*	1					
24	3924-312-003-00	BUSH/10X12X20	*	1					
25	2232-645-026-00	BUSH/10X12X10	*	1					
26	2232-645-014-20	HUB/12X08	*	2					
27	2232-645-017-00	HUB/12X05	*	2					
28	2232-645-016-00	PLATE/Z/24X40	*	1					
29	2232-645-025-00	BUSH/10X12X06	*	2					
30	V411-700-010-00	WASHER	*	2					

FIG.115 DRIVE(FERTILIZER)SYSTEM(G TYPE)(2/2)

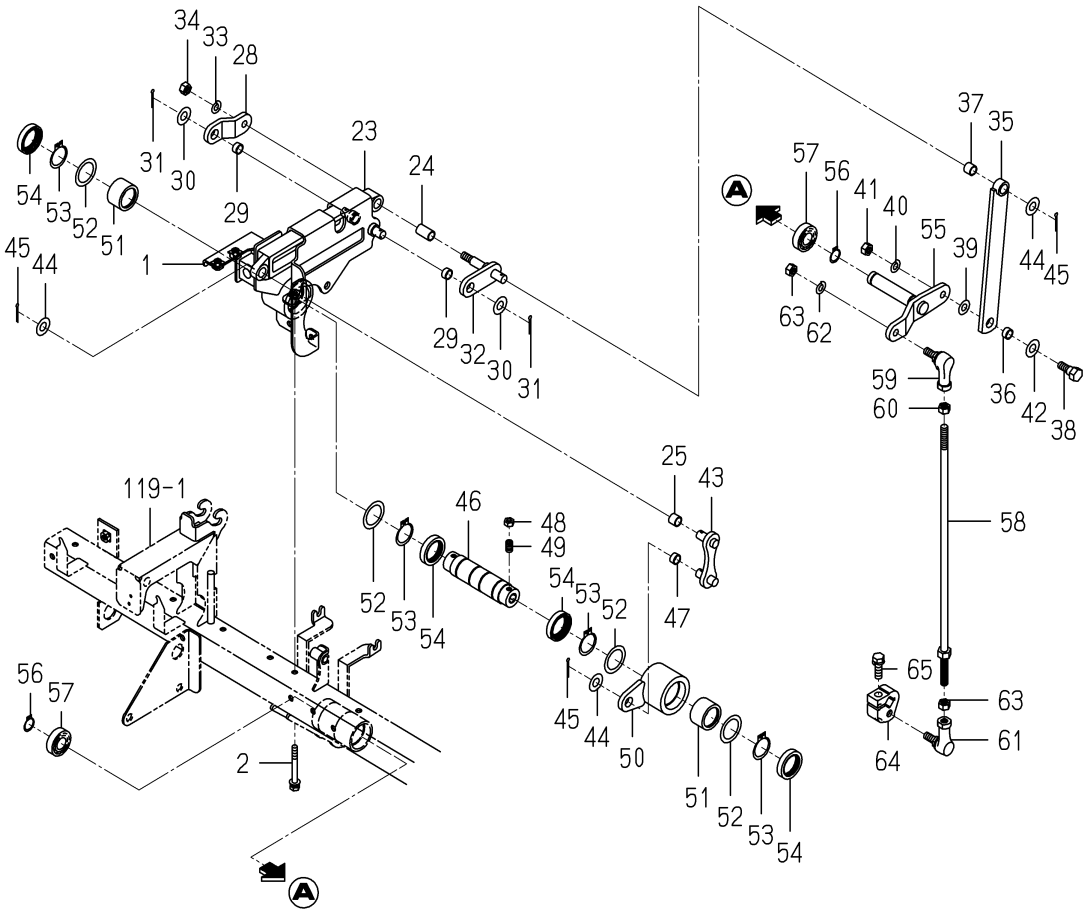

2232-646 -0100

KEY	PART CODE	DESCRIPTION	SPC	TYPE OF MODEL NP60E16		ITC	COL	GRP	REMARKS
31	2188-208-015-00	PIN,COTTER/2.5X20/SU	*	2					
32	2232-645-420-00	SHAFT/COUNTER COMP	*	1					
33	V401-700-008-00	WASHER/LOCK	*	1					
34	V304-700-008-00	NUT	*	1					
35	2232-645-330-00	ARM/DRIVE COMP	*	1					
36	2232-645-025-00	BUSH/10X12X06	*	1					
37	2232-645-026-00	BUSH/10X12X10	*	1					
38	2232-645-006-10	PIN/10X30	*	1					
39	V411-700-008-00	WASHER	*	1					
40	V401-700-008-00	WASHER/LOCK	*	1					
41	V304-700-008-00	NUT	*	1					
42	V411-700-010-00	WASHER	*	1					
43	2232-645-350-00	ARM/COUNTER/50 COMP	*	1					
44	V411-260-010-00	WASHER/M10	*	3					
45	2188-208-015-00	PIN,COTTER/2.5X20/SU	*	3					
46	8843-704-004-00	HUB/ROLLER CLUTCH	*	1					
47	2232-645-025-00	BUSH/10X12X06	*	1					
48	V301-700-006-00	NUT	*	2					
49	V180-446-001-20	SCREW/SET	*	2					
50	2232-676-210-00	HUB/ROLLER CLUTCH/NP	*	1					
51	8843-704-251-00	CLUTCH,ROLLER/FC-25	*	2					
52	8843-704-005-00	WASHER/25X35X01	*	4					
53	V704-140-025-00	RING,SNAP/25 C	*	4					
54	V744-125-350-70	SEAL,OIL/TC25357	*	4					
55	2232-646-210-00	ARM/DRIBVE/NP COMP	*	1					
56	2145-770-014-00	RING, SNAP	*	2					
57	V600-150-600-20	BEARING,RB/6002SS	*	2					
58	2232-645-310-00	ROD/DRIVE/NP COMP	*	1					
59	1560-695-022-00	JOINT BALL M08LH	*	1					
60	1560-132-007-30	NUT/M8	*	1					

FIG.115 DRIVE(FERTILIZER)SYSTEM(G TYPE)(2/2)

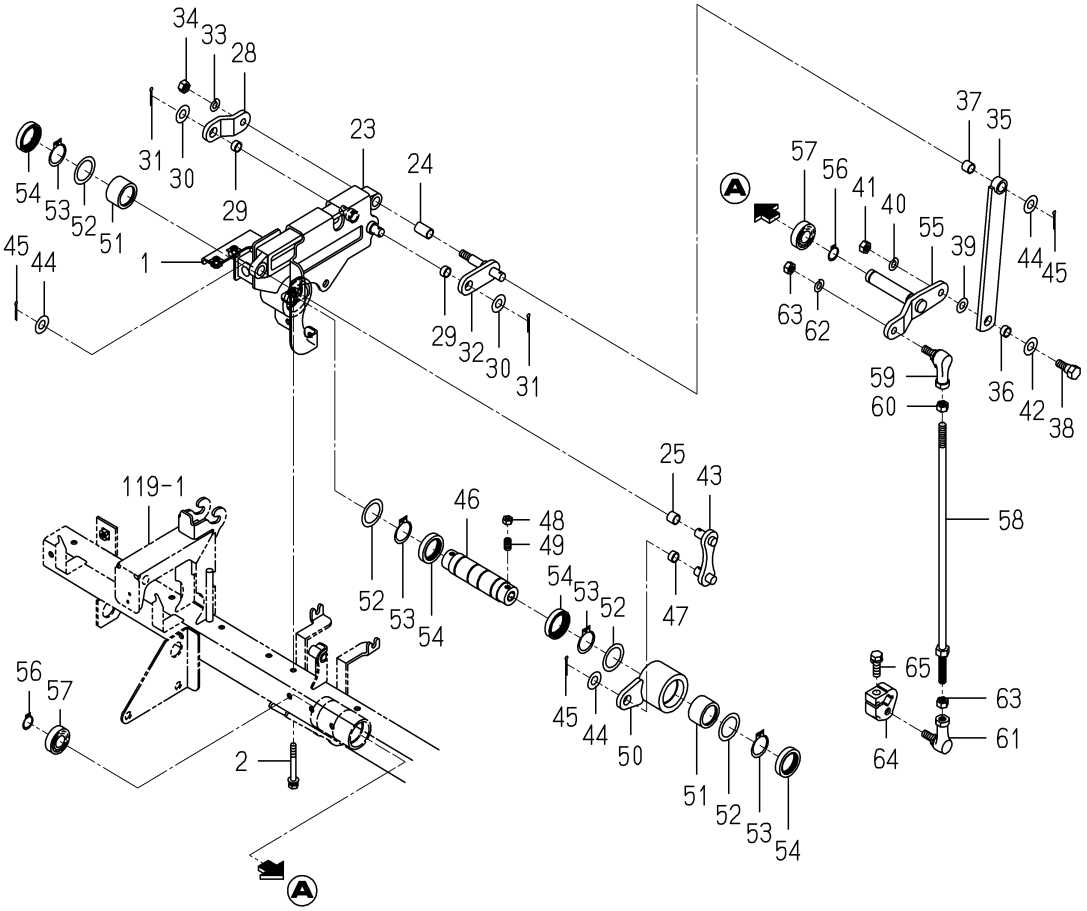

2232-646 -0100

KEY	PART CODE	DESCRIPTION	SPC	TYPE OF MODEL NP60E16		ITC	COL	GRP	REMARKS
61	1560-695-021-00	JOINT BALL M08RH	*	1					
62	V401-160-008-00	WASHER,SP/M 8	*	1					
63	V304-260-008-00	NUT	*	2					
64	2232-645-019-10	ARM/FERTILIZEDRIVE	*	1					
65	V211-560-802-50	BOLT,SEMS/M8X25 7T	*	1					

FIG.116 DRIVE(FERTILIZER)SYSTEM(D TYPE)(1/2)

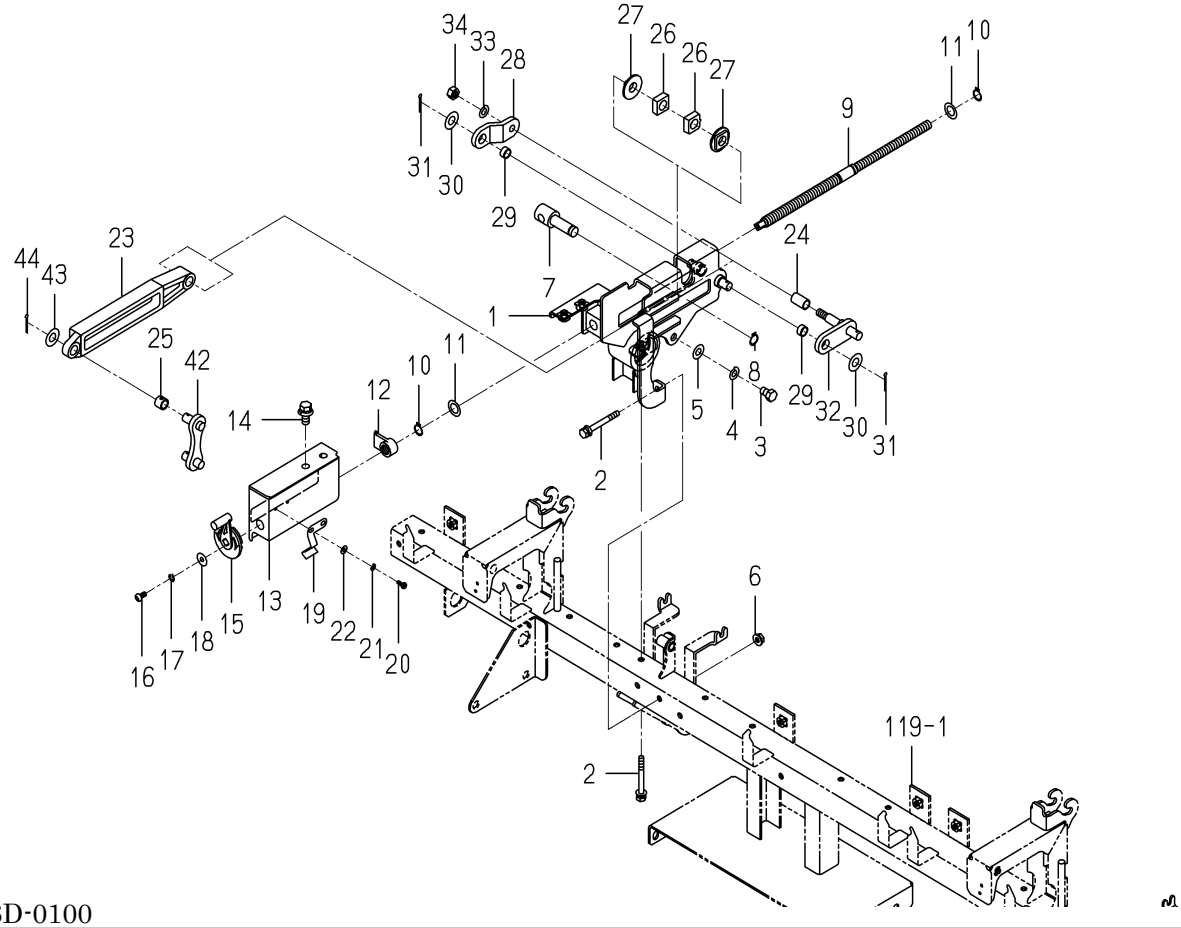

2232-646D-0100

KEY	PART CODE	DESCRIPTION	SPC	TYPE OF MODEL NP60E16		ITC	COL	GRP	REMARKS
1	2233-648-320-00	PLATE/ADJUST/D COMP	*	1					
2	2232-645-022-00	BOLT/SPM6X55/G	*	3					
3	V201-700-801-20	BOLT	*	1					
4	V401-700-008-00	WASHER/LOCK	*	1					
5	V411-700-008-00	WASHER	*	1					
6	2204-803-068-00	NUT/WASER/M6/SUS	*	2					
7	2232-645-015-10	PIVOT/DIAL	*	1					
8	2145-774-003-00	SNAPRING	*	1					
9	2232-645-011-10	ROD/DIALADJUST	*	1					
10	2145-774-003-00	SNAPRING	*	2					
11	8836-703-055-00	WASHER/M12X20X01	*	2					
12	2232-645-013-00	NUT/ADJUST	*	1					
13	2232-645-018-00	GUIDE/ADJUSUT	*	1					
14	2232-645-023-00	BOLT/SP/M8X20/G	*	2					
15	2232-645-007-00	HANDLE/ADJUST	*	1					
16	V111-705-001-00	SCREW	*	1					
17	V401-700-005-00	WASHER/LOCK	*	1					
18	8843-404-009-00	WASHER/05X16X01	*	1					
19	8843-404-006-00	SPRING	*	1					
20	8844-405-028-00	SCREW/04	*	2					
21	V401-700-004-00	WASHER/LOCK	*	2					
22	V411-700-004-00	WASHER	*	2					
23	2233-648-012-00	ARM/ADJUST/D	*	1					
24	3924-312-003-00	BUSH/10X12X20	*	1					
25	2233-648-001-00	BUSH/10X13X10	*	1					
26	2232-645-014-20	HUB/12X08	*	2					
27	2232-645-017-00	HUB/12X05	*	2					
28	2232-645-016-00	PLATE/Z/24X40	*	1					
29	2232-645-025-00	BUSH/10X12X06	*	2					
30	V411-700-010-00	WASHER	*	2					

FIG.116 DRIVE(FERTILIZER)SYSTEM(D TYPE)(2/2)

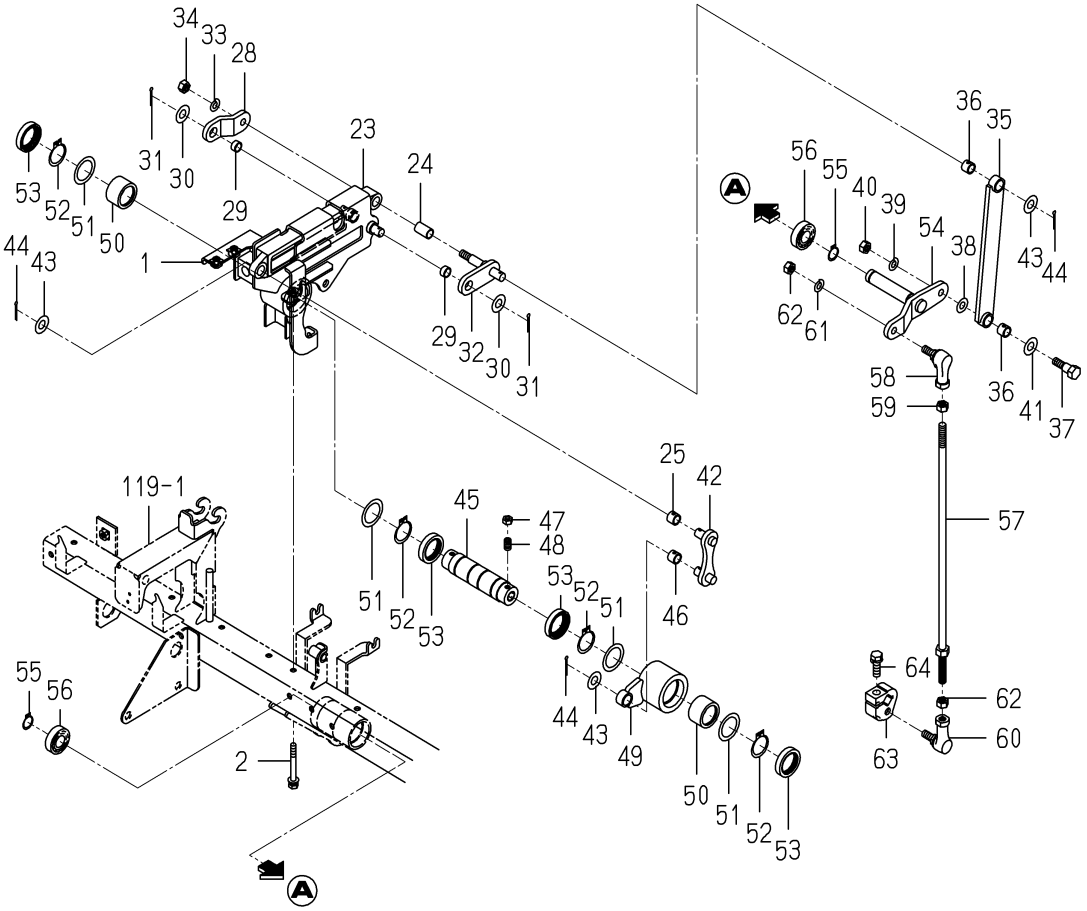

2232-646D-0100

KEY	PART CODE	DESCRIPTION	SPC	TYPE OF MODEL NP60E16		ITC	COL	GRP	REMARKS
31	2188-208-015-00	PIN,COTTER/2.5X20/SU	*	2					
32	2232-645-420-00	SHAFT/COUNTER COMP	*	1					
33	V401-700-008-00	WASHER/LOCK	*	1					
34	V304-700-008-00	NUT	*	1					
35	2233-648-330-00	ARM/DRIVE/D COMP	*	1					
36	2233-648-001-00	BUSH/10X13X10	*	2					
37	2233-648-006-00	PIN/10X36	*	1					
38	V411-700-008-00	WASHER	*	1					
39	V401-700-008-00	WASHER/LOCK	*	1					
40	V304-700-008-00	NUT	*	1					
41	V411-700-010-00	WASHER	*	1					
42	2233-648-350-00	ARM/COUNTER/50/ COMP	*	1					
43	V411-260-010-00	WASHER/M10	*	3					
44	2188-208-015-00	PIN,COTTER/2.5X20/SU	*	3					
45	8843-704-004-00	HUB/ROLLER CLUTCH	*	1					
46	2233-648-001-00	BUSH/10X13X10	*	1					
47	V301-700-006-00	NUT	*	2					
48	V180-446-001-20	SCREW/SET	*	2					
49	2233-678-220-00	HUB/ROLLER CLUTCH/NP	*	1					
50	8843-704-251-00	CLUTCH,ROLLER/FC-25	*	2					
51	8843-704-005-00	WASHER/25X35X01	*	4					
52	V704-140-025-00	RING,SNAP/25 C	*	4					
53	V744-125-350-70	SEAL,OIL/TC25357	*	4					
54	2232-646-210-00	ARM/DRIBVE/NP COMP	*	1					
55	2145-770-014-00	RING, SNAP	*	2					
56	V600-150-600-20	BEARING,RB/6002SS	*	2					
57	2232-645-310-00	ROD/DRIVE/NP COMP	*	1					
58	1560-695-022-00	JOINT BALL M08LH	*	1					
59	1560-132-007-30	NUT/M8	*	1					
60	1560-695-021-00	JOINT BALL M08RH	*	1					

FIG.116 DRIVE(FERTILIZER)SYSTEM(D TYPE)(2/2)

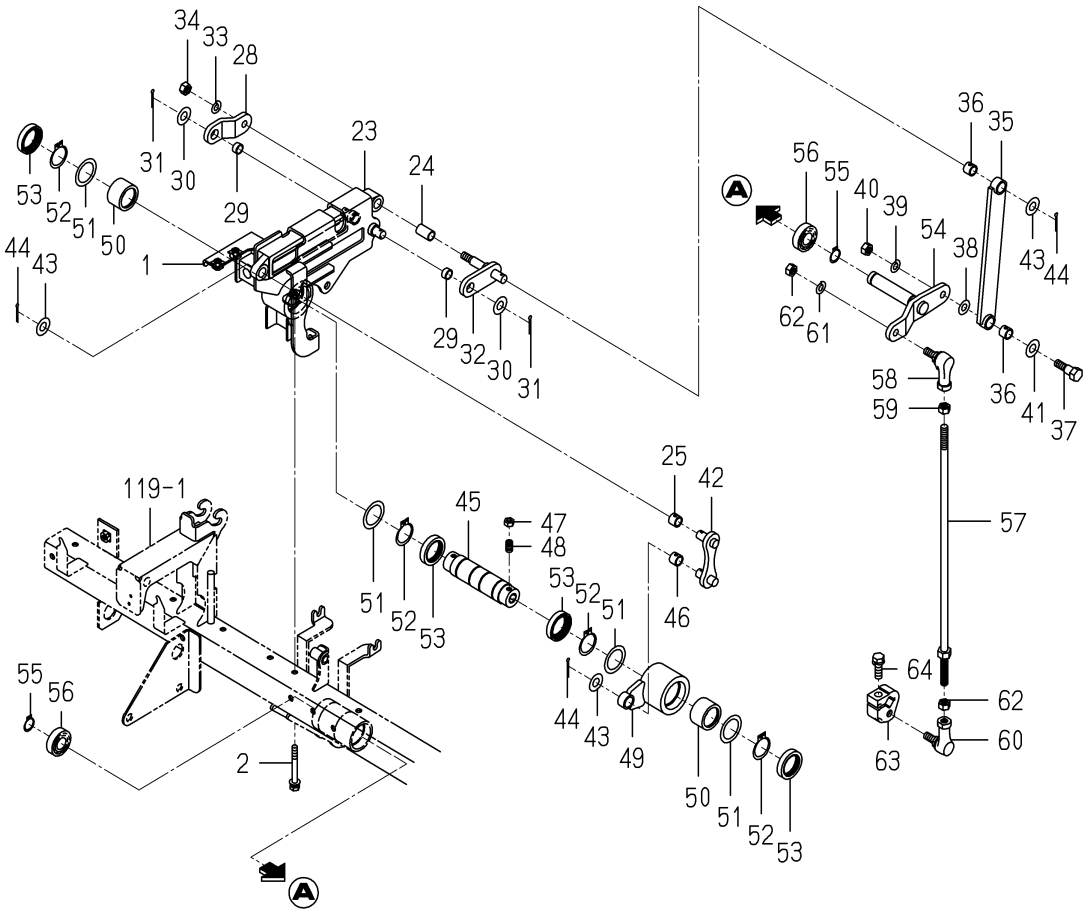

2232-646D-0100

KEY	PART CODE	DESCRIPTION	SPC	TYPE OF MODEL NP60E16		ITC	COL	GRP	REMARKS
61	V401-160-008-00	WASHER,SP/M 8	*	1					
62	V304-260-008-00	NUT	*	2					
63	2232-645-019-10	ARM/FERTILIZEDRIVE	*	1					
64	V211-560-802-50	BOLT,SEMS/M8X25 7T	*	1					

FIG.117 HARNESS&SENSOR(FERTILIZER)SYSTEM

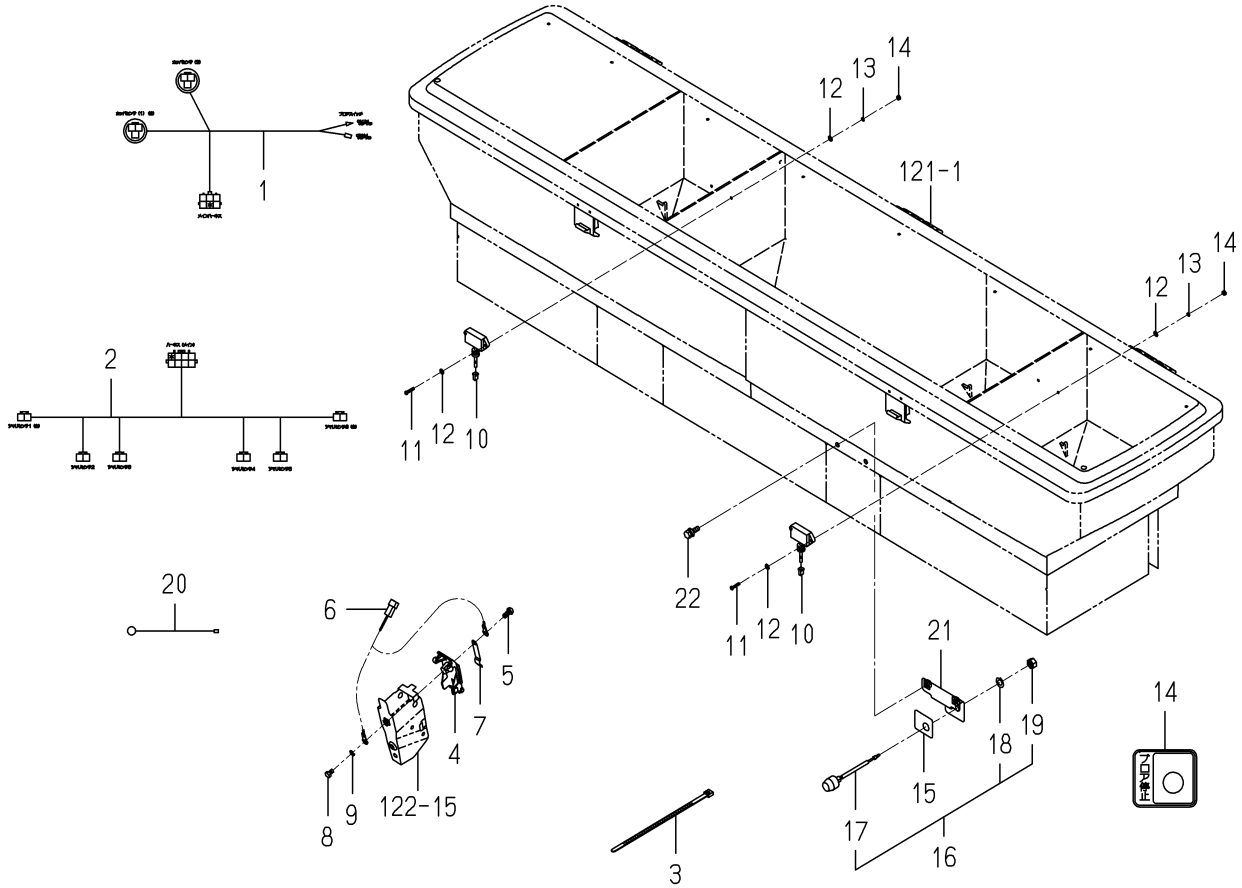

2232-652 -0100

KEY	PART CODE	DESCRIPTION	SPC	TYPE OF MODEL NP60E16		ITC	COL	GRP	REMARKS
1	2232-652-210-00	HARNESS/HOPPER/ ASSY	*	1					
2	2232-652-230-00	HARNESS/BLOCK SENSOR	*	1					
3	1376-402-003-00	BAND,WIRE/140	*	1					
4	2232-651-002-00	COVER/DICTHER/NP	*	6					
5	8836-601-011-00	SCREW,TAPPING	*	6					
6	8844-535-002-00	HARNESS/SENCER/PZ	*	6					
7	2232-651-003-00	SENSOR/CLOGGED/NP	*	6					
8	2513-801-042-00	BOLT	*	6					
9	V401-700-005-00	WASHER/LOCK	*	6					
10	8842-535-250-10	SENSOR,HOPPPER	*	2					
11	V111-703-001-60	SCREW	*	4					
12	V411-700-003-00	WASHER	*	8					
13	V401-700-003-00	WASHER/LOCK	*	4					
14	V301-700-003-00	NUT	*	4					
15	2232-651-001-00	LABEL/SWITCH	*	1					
16	2145-542-230-00	SWITCH,PUSH	*	1					
17	2145-542-232-10	BOOT	*	1					
18	V401-160-008-00	WASHER,SP/M 8	*	1					
19	V335-260-008-00	NUT	*	1					
20	8836-502-203-00	HARNESS/SWGND	*	1					
21	2232-686-300-10	STAY/SWITCH COMP	*	1					
22	2232-645-021-00	BOLT/SP/M6X20/G	*	2					

FIG.118 AIR CHAMBER SYSTEM(1/2)

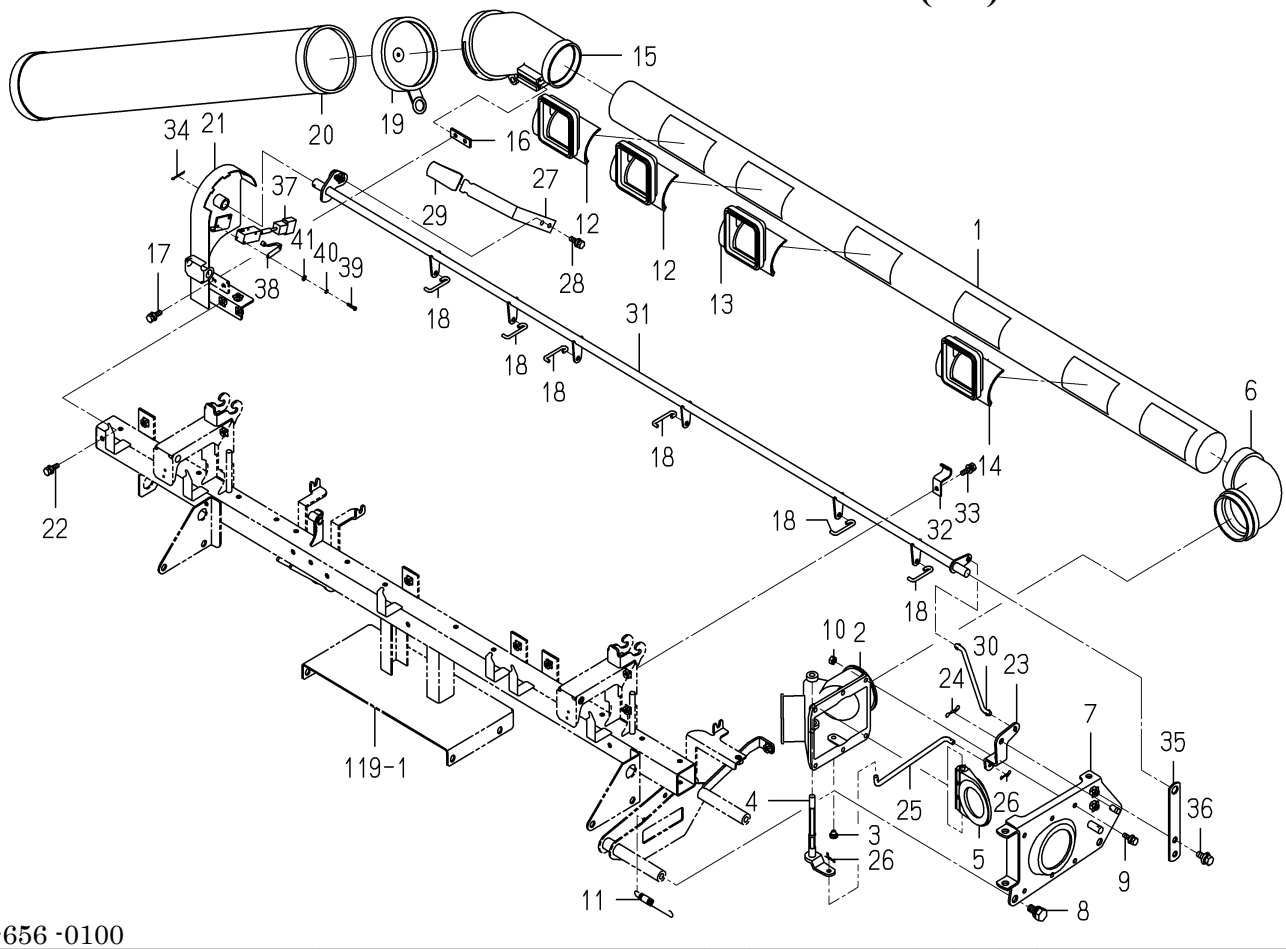

2232-656 -0100

KEY	PART CODE	DESCRIPTION	SPC	TYPE OF MODEL NP60E16		ITC	COL	GRP	REMARKS
1	2232-656-005-10	TUBE/DISCHARGE/6	*	1					
2	2232-655-002-00	CASE/SUTTER	*	1					
3	8842-505-007-00	CAP,SHUTTER	*	1					
4	2232-655-008-00	SUTTERCHANGE	*	1					
5	2232-655-001-00	SUTTER	*	1					
6	2232-655-003-00	JOINT/DISCHARGE	*	1					
7	2232-665-500-10	STAY/AIRCHAMBER COMP	*	1					
8	8842-505-035-00	BOLT/M10X20	*	2					
9	2232-645-021-00	BOLT/SP/M6X20/G	*	6					
10	8842-505-032-00	NUT/M6	*	6					
11	8842-505-019-00	SPRING/HE079	*	1					
12	2232-655-004-00	BOOT/DISCHARGE	*	2					
13	2232-655-015-00	BOOT/DISCHARGE/RH	*	3					
14	2232-655-016-00	BOOT/DISCHARGE/C	*	1					
15	2232-655-006-00	DUCT/DISCHARGE	*	1					
16	2232-655-007-00	PLATE/I/14X40	*	1					
17	2232-645-021-00	BOLT/SP/M6X20/G	*	2					
18	2232-656-020-00	ROD/SHUTTER	*	6					
19	8842-515-015-00	CAP,DUCT/EXHAUST	*	1					
20	8843-514-300-00	REMAINDER/SHOOT COMP	*	1					
21	2232-655-260-10	PANEL/DISCHARGE COMP	*	1			6G		
22	2232-645-021-00	BOLT/SP/M6X20/G	*	3					
23	2232-655-009-00	ARM/DISCHARGE	*	1					
24	2161-735-006-00	PIN	*	1					
25	2232-655-010-10	ROD/DISCHARGE	*	1					
26	2161-735-005-00	PIN	*	2					
27	2232-655-012-00	LEVER/DISCHARGE	*	1					
28	2232-645-021-00	BOLT/SP/M6X20/G	*	1					
29	2145-751-004-00	GRIP	*	1					
30	2232-655-011-10	ROD/COUNTER/DISCHARG	*	1					

FIG.118 AIR CHAMBER SYSTEM(2/2)

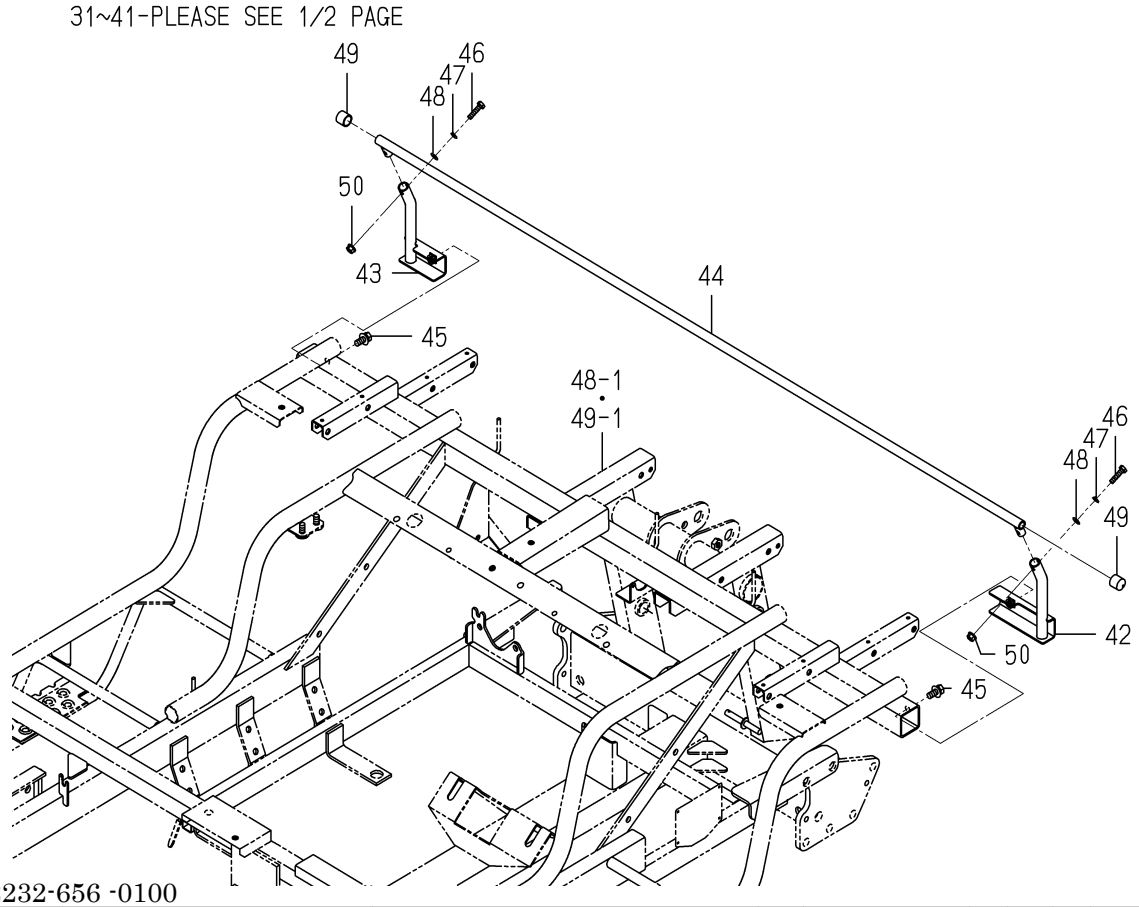

2232-656 -0100

KEY	PART CODE	DESCRIPTION	SPC	TYPE OF MODEL NP60E16		ITC	COL	GRP	REMARKS
31	2232-656-400-00	SHAFT/DISCHARGE/6	*	1			7F		
32	2232-656-022-00	HOLDDER/DISCHARGE	*	2					
33	2232-645-021-00	BOLT/SP/M6X20/G	*	2					
34	2188-208-015-00	PIN,COTTER/2.5X20/SU	*	1					
35	2232-656-021-00	HOLDDER/DISCHARGE/SI	*	1					
36	2232-645-023-00	BOLT/SP/M8X20/G	*	2					
37	3807-836-350-00	SWITCH ASSY	*	1					
38	3807-836-400-00	ACTUATOR ASSY	*	1					
39	V111-163-001-60	SCREW/M3X16	*	2					
40	V401-160-003-00	WASHER,SP/M 3	*	2					
41	V411-260-003-00	WASHER/M3	*	2					
42	2232-696-100-10	STAY/DUCT GUARD/6/LH	*	1					
43	2232-696-110-10	STAY/DUCT GUARD/6/RH	*	1					
44	2232-696-120-10	GUARD/DUCT/6 COMP	*	1					
45	2232-645-023-00	BOLT/SP/M8X20/G	*	2					
46	V200-700-602-50	BOLT	*	2					
47	V401-700-006-00	WASHER/LOCK	*	2					
48	V411-700-006-00	WASHER	*	2					
49	2163-703-004-10	CAP/15X15L	*	2					
50	2204-803-068-00	NUT/WASER/M6/SUS	*	2					

FIG.119 FRAME(FERTILIZER)SYSTEM(1/2)

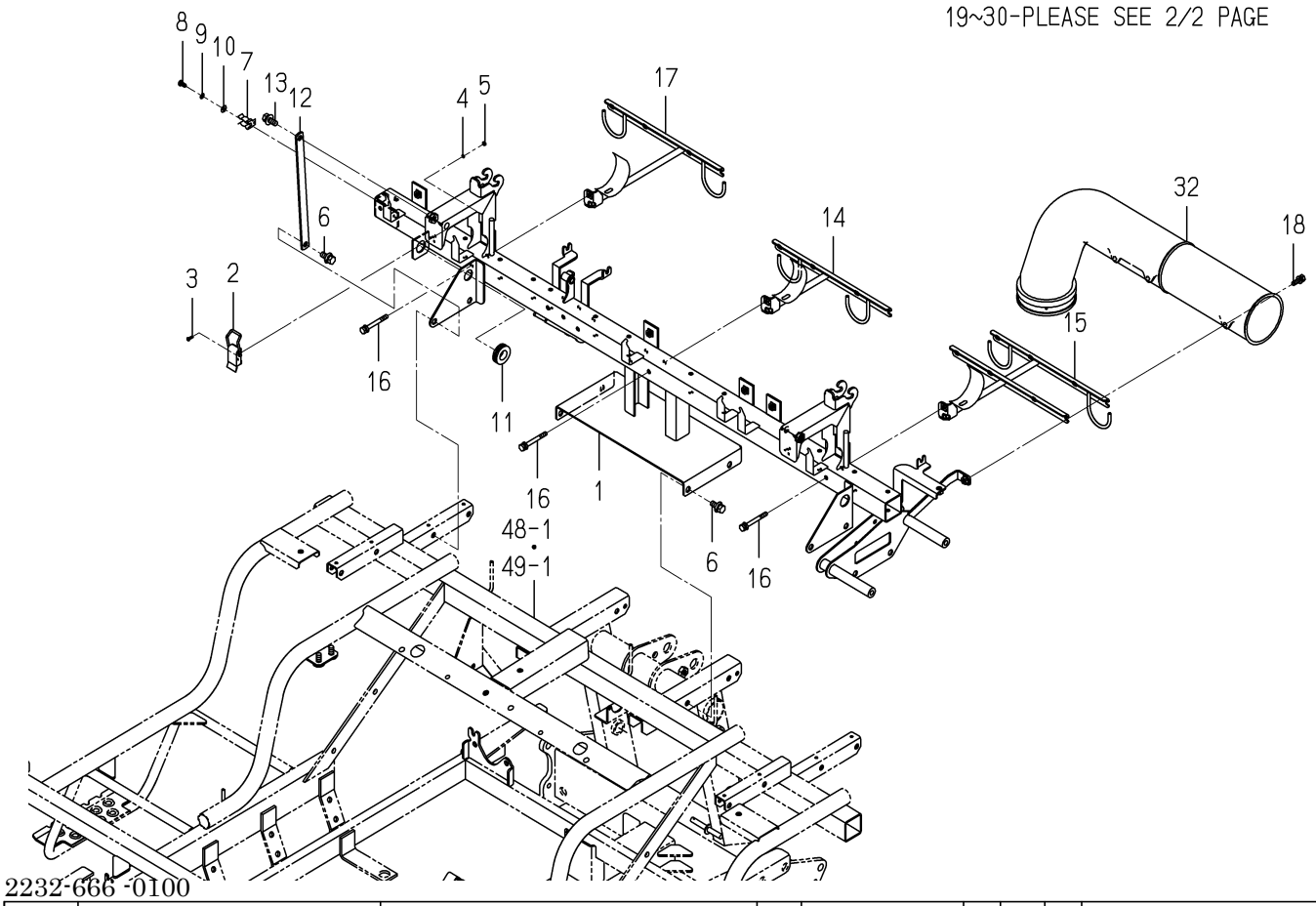

KEY	PART CODE	DESCRIPTION	SPC	TYPE OF MODEL NP60E16		ITC	COL	GRP	REMARKS
1	2232-666-250-30	FRAME/6/NP COMP	*	1					
2	8836-508-001-00	HOOK	*	2					
3	8836-506-005-00	SCREW,TAPPING/M3	*	4					
4	V401-700-003-00	WASHER/LOCK	*	4					
5	V301-700-003-00	NUT	*	4					
6	V211-360-802-00	BOLT/SP	*	8					
7	2194-508-016-00	HOOK/BONNET/PQ	*	1					
8	V111-705-001-00	SCREW	*	1					
9	V401-700-005-00	WASHER/LOCK	*	1					
10	V411-700-005-00	WASHER	*	1					
11	1575-616-005-00	GROMMET/17X21X3	*	1					
12	2232-665-001-00	PLATE/IR/16X239	*	2					
13	2232-645-023-00	BOLT/SP/M8X20/G	*	2					
14	2232-692-220-20	STAY/DUCT/REAR COMP	*	1					
15	2232-692-250-00	STAY/DUCT/REAR/LH	*	1					
16	2232-645-022-00	BOLT/SPM6X55/G	*	3					
17	2232-692-260-00	STAY/DUCT/REAR/RH	*	1					
18	2232-645-021-00	BOLT/SP/M6X20/G	*	1					
19	8842-625-400-20	BLOWER/FG ASSY	*	1					
20	8843-624-205-00	CAP	*	1					
21	8842-625-409-00	BOLT/M6X2	*	6					
22	8842-625-408-00	SCREW/M3X	*	9					
23	V301-700-003-00	NUT	*	9					
24	8842-625-404-00	CASING/INNER	*	1					
25	8842-625-405-00	CASING/OUTER/PG	*	1					
26	8842-625-406-00	FAN	*	1					
27	8842-625-004-00	SPRING/BRUSH/FG	*	2					
28	2232-665-510-00	STAY/BLOWER COMP	*	1					
29	7957-405-003-00	PIN/HAIR	*	1					
30	8843-624-004-00	JOINT,BLOWER	*	1					

FIG.119 FRAME(FERTILIZER)SYSTEM(2/2)

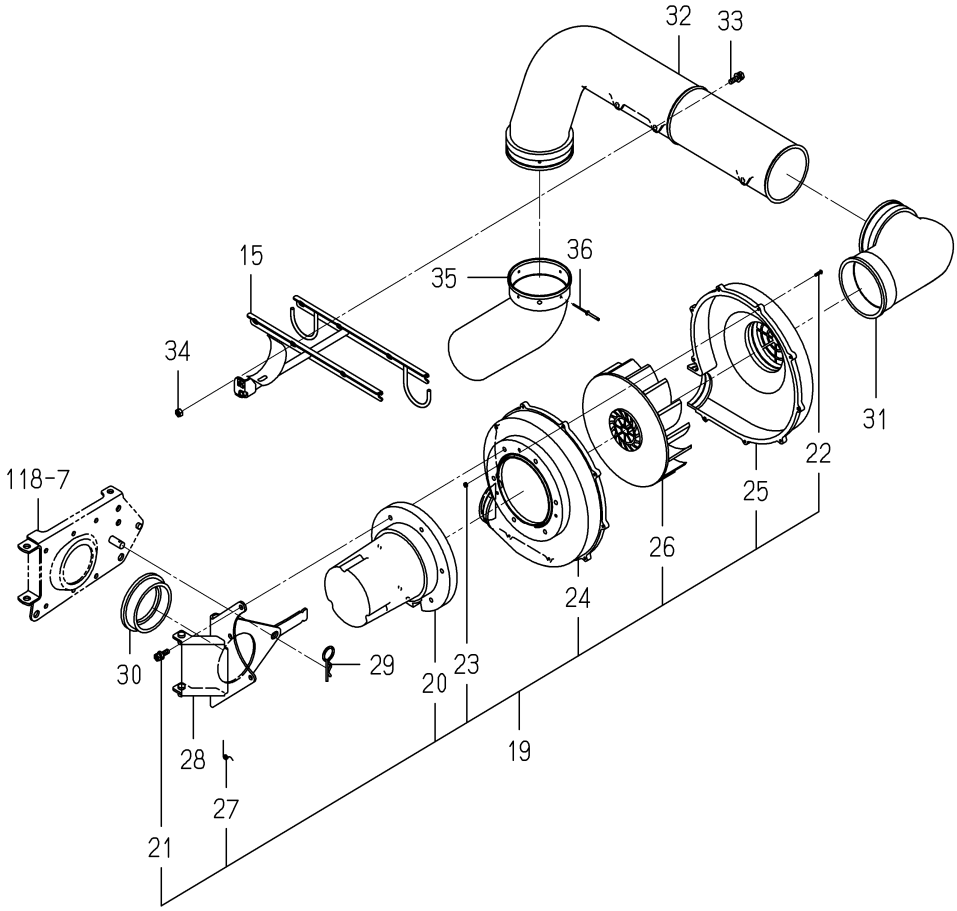

2232-666 -0100

KEY	PART CODE	DESCRIPTION	SPC	TYPE OF MODEL NP60E16		ITC	COL	GRP	REMARKS
31	2232-665-005-10	JOINT/BLOWER	*	1					
32	2232-666-001-20	DUCTHOSE/REAR/6	*	1					
33	2232-645-021-00	BOLT/SP/M6X20/G	*	2					
34	V301-700-006-00	NUT	*	2					
35	2232-666-003-00	JOINT/BLOWER/LOWER/6	*	1					
36	2186-528-244-00	RIVET	*	4					

FIG.120 SEND OUT(FERTILIZER)SYSTEM(1/3)

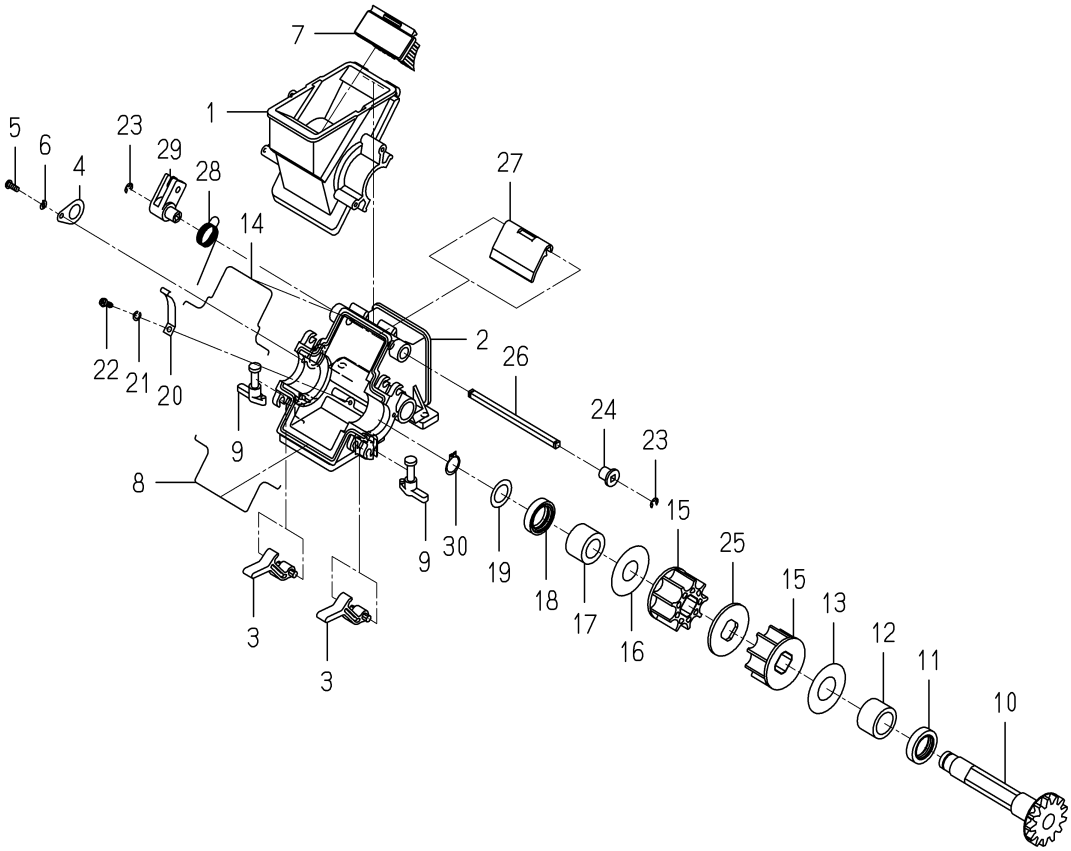

2232-676B-0100

KEY	PART CODE	DESCRIPTION	SPC	TYPE OF MODEL NP60E16		ITC	COL	GRP	REMARKS
1	2232-675-201-00	CAPSULE/UPPER/PZN	*	2					
2	2232-675-202-00	CAPSULE/LOWER/PZN	*	2					
3	8842-705-223-00	HOOK,COUPSULE	*	4					
4	2232-675-213-00	PALTE/GEAR	*	2					
5	V111-704-001-00	SCREW	*	2					
6	V401-700-004-00	WASHER/LOCK	*	2					
7	2232-675-220-00	BURUSH COMP	*	2					
8	2232-675-205-00	PACKING/CAPSULE/LOWE	*	2					
9	2232-675-212-10	HOOK/FUNNEL	*	4					
10	8842-705-214-10	GEAR,SPUR/13	*	2					
11	V744-120-300-70	SEAL,OIL/TC20307	*	2					
12	8842-705-215-00	BUSH,GEAR	*	2					
13	8842-705-216-00	WASHER/21X45X01	*	2					
14	2232-675-204-00	PACKING/CAPSULE/UPPE	*	2					
15	2232-675-217-00	ROLL	*	4					
16	8842-705-224-00	WASHER/18X45X1	*	2					
17	8842-705-218-00	BUSH/17X28X19	*	2					
18	V744-115-300-70	SEAL,OIL/TC15307	*	2					
19	8842-705-219-00	WASHER/16X25X0.4	*	2					
20	2232-675-207-00	PLATE/CAPSULE	*	2					
21	V401-700-004-00	WASHER/LOCK	*	2					
22	8842-705-032-00	SCREW/TAPPING/M4X12	*	2					
23	8841-536-011-00	RING, SNAP	*	4					
24	8842-705-208-00	BUSH,EXHAUST LEVER	*	2					
25	2232-675-218-00	COLLER/47X3	*	2					
26	8842-705-211-10	SHAFT/DISCHARGE	*	2					
27	2232-675-209-00	SHUTTER/DISCHARGE	*	2					
28	2232-675-214-00	SPRING/HT019/LH/Z	*	2					
29	2232-675-211-00	ARM/DISCHARGE	*	2					
30	2145-770-014-00	RING, SNAP	*	2					

FIG.120 SEND OUT(FERTILIZER)SYSTEM(2/3)

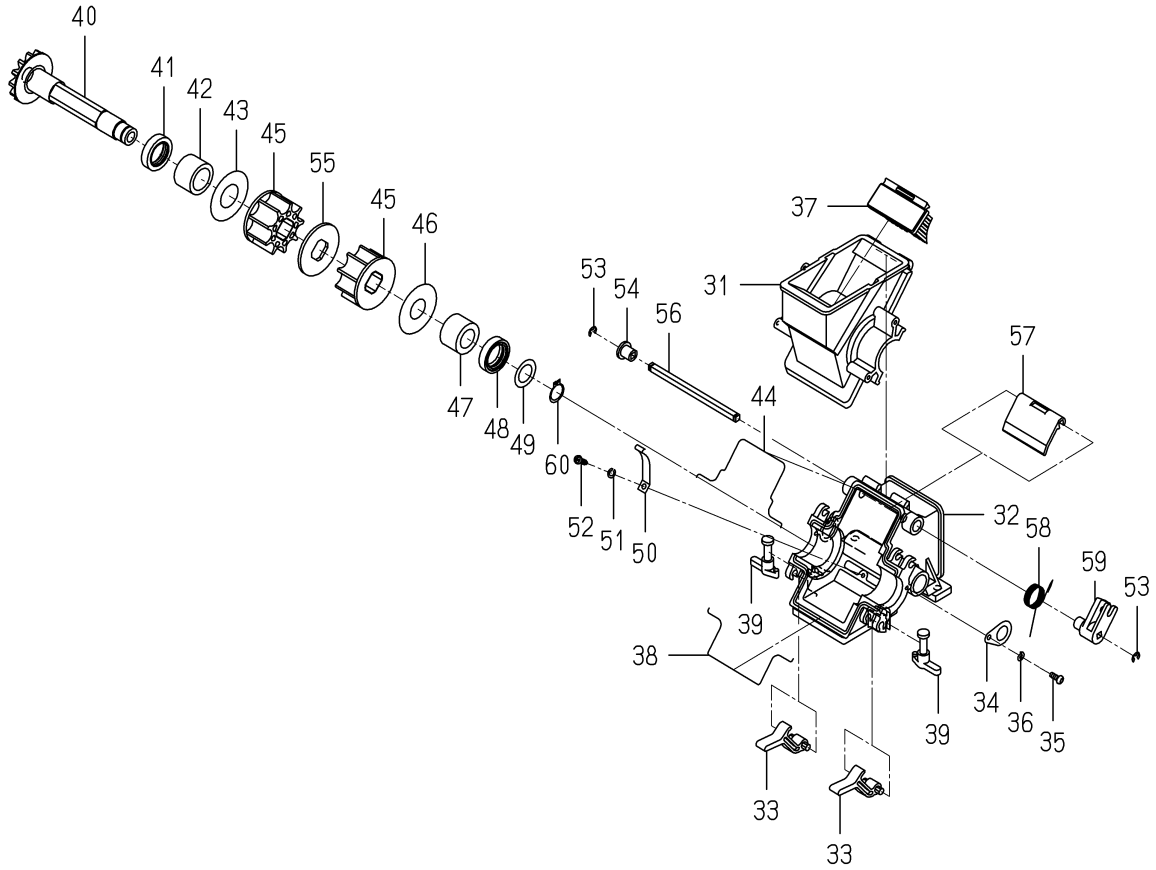

2232-676B-0100

KEY	PART CODE	DESCRIPTION	SPC	TYPE OF MODEL NP60E16		ITC	COL	GRP	REMARKS
31	2232-675-201-00	CAPSULE/UPPER/PZN	*	4					
32	2232-675-202-00	CAPSULE/LOWER/PZN	*	4					
33	8842-705-223-00	HOOK,COUPSULE	*	8					
34	2232-675-213-00	PALTE/GEAR	*	4					
35	V111-704-001-00	SCREW	*	4					
36	V401-700-004-00	WASHER/LOCK	*	4					
37	2232-675-220-00	BURUSH COMP	*	4					
38	2232-675-205-00	PACKING/CAPSULE/LOWE	*	4					
39	2232-675-212-10	HOOK/FUNNEL	*	8					
40	8842-705-214-10	GEAR,SPUR/13	*	4					
41	V744-120-300-70	SEAL,OIL/TC20307	*	4					
42	8842-705-215-00	BUSH,GEAR	*	4					
43	8842-705-216-00	WASHER/21X45X01	*	4					
44	2232-675-204-00	PACKING/CAPSULE/UPPE	*	4					
45	2232-675-217-00	ROLL	*	8					
46	8842-705-224-00	WASHER/18X45X1	*	4					
47	8842-705-218-00	BUSH/17X28X19	*	4					
48	V744-115-300-70	SEAL,OIL/TC15307	*	4					
49	8842-705-219-00	WASHER/16X25X0.4	*	4					
50	2232-675-207-00	PLATE/CAPSULE	*	4					
51	V401-700-004-00	WASHER/LOCK	*	4					
52	8842-705-032-00	SCREW/TAPPING/M4X12	*	4					
53	8841-536-011-00	RING, SNAP	*	8					
54	8842-705-208-00	BUSH,EXHAUST LEVER	*	4					
55	2232-675-218-00	COLLER/47X3	*	4					
56	8842-705-211-10	SHAFT/DISCHARGE	*	4					
57	2232-675-209-00	SHUTTER/DISCHARGE	*	4					
58	2232-675-215-00	SPRING/HT019/RH/Z	*	4					
59	2232-675-211-00	ARM/DISCHARGE	*	4					
60	2145-770-014-00	RING, SNAP	*	4					

FIG.120 SEND OUT(FERTILIZER)SYSTEM(3/3)

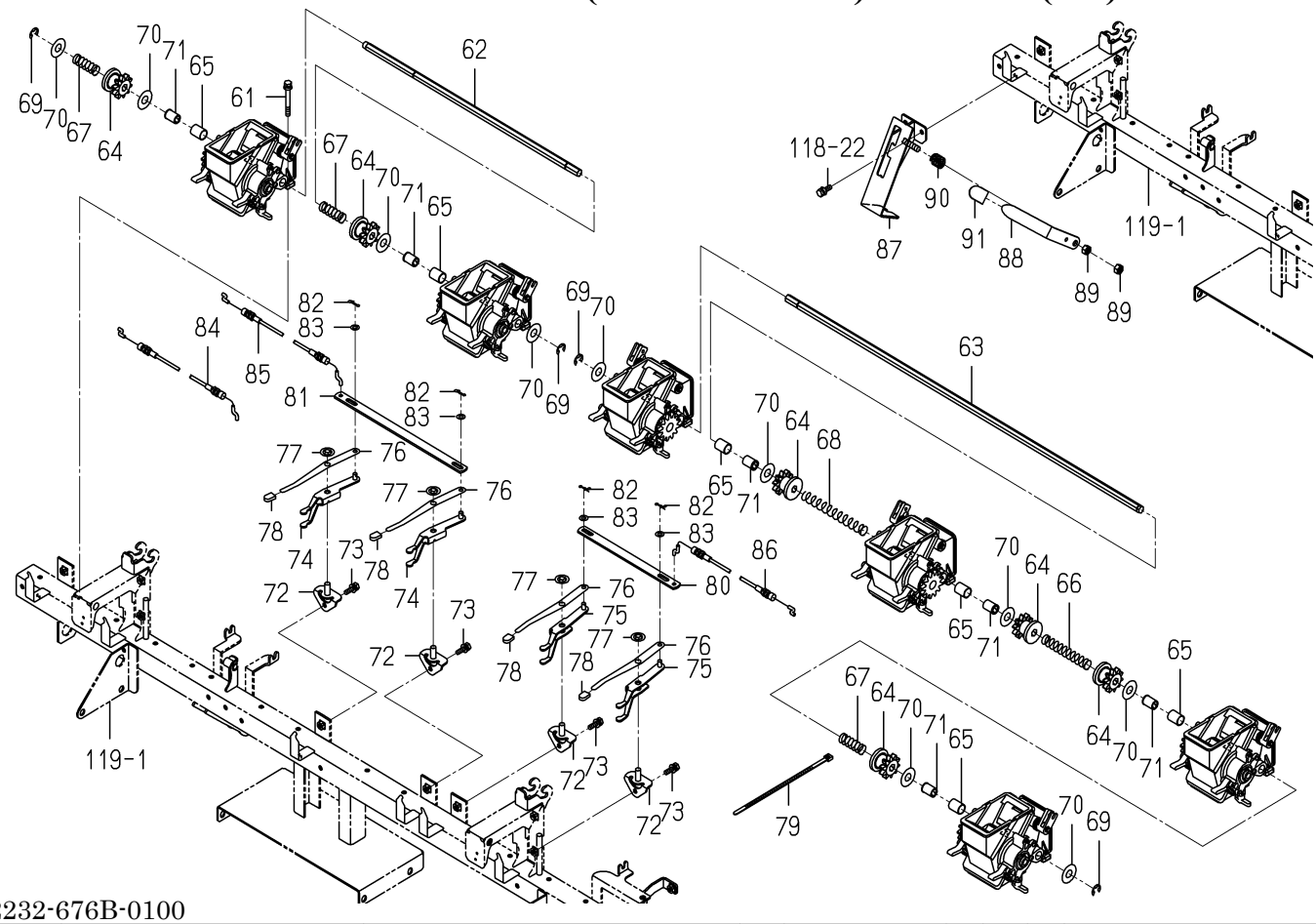

2232-676B-0100

KEY	PART CODE	DESCRIPTION	SPC	TYPE OF MODEL NP60E16		ITC	COL	GRP	REMARKS
61	2232-645-022-00	BOLT/SPM6X55/G	*	12					
62	2232-676-001-10	SHAFT/FERTILIZE/6RH	*	1					
63	2232-676-003-00	SHAFT/FERTILIZE/6LH	*	1					
64	2232-675-004-00	GEAR/SPUR/10	*	6					
65	3646-102-011-10	BUSH/14X16X20	*	6					
66	2232-675-006-00	SPRING/HC093	*	1					
67	2232-675-008-00	SPRING/HC044	*	3					
68	2232-675-007-00	SPRING/HC128	*	1					
69	8842-515-022-00	RING, SNAP	*	4					
70	8842-705-018-00	WASHER/13X30X01	*	10					
71	2186-805-003-00	BUSH,SEEDLING	*	6					
72	2232-675-230-00	CLUTCHFULCRUM	*	6					
73	2232-645-021-00	BOLT/SP/M6X20/G	*	6					
74	2232-676-300-10	FORK/CULTCH/LH/ COMP	*	2					
75	2232-676-310-10	FORK/CULTCH/RH/ COMP	*	4					
76	2232-676-031-00	LEVER/FERTILIZE CLUT	*	6					
77	2183-526-008-00	BUSHPUSHNUT/08	*	6					
78	2232-676-032-00	CAP/FERTILIZECLUTCH	*	6					
79	1376-402-003-00	BAND,WIRE/140	*	6					
80	2232-675-001-00	PLATE/IR/13X211	*	2					
81	2232-675-002-00	PLATE/IR/16X277	*	1					
82	2161-735-005-00	PIN	*	6					
83	V411-700-006-00	WASHER	*	6					
84	2232-676-520-00	CABLE/FERTILIZE/R	*	1					
85	2232-676-530-00	CABLE/FERTILIZE/CL	*	1					
86	2232-676-510-00	CABLE/FERTILIZE/L	*	1					
87	2233-678-200-00	BASE/TOTALCLUTC COMP	*	1					
88	2233-678-004-00	LEVER/TOTALCLUTCH	*	1					
89	V304-260-008-00	NUT	*	2					
90	2172-124-004-00	SPRING	*	1					

FIG.120 SEND OUT(FERTILIZER)SYSTEM(3/3)

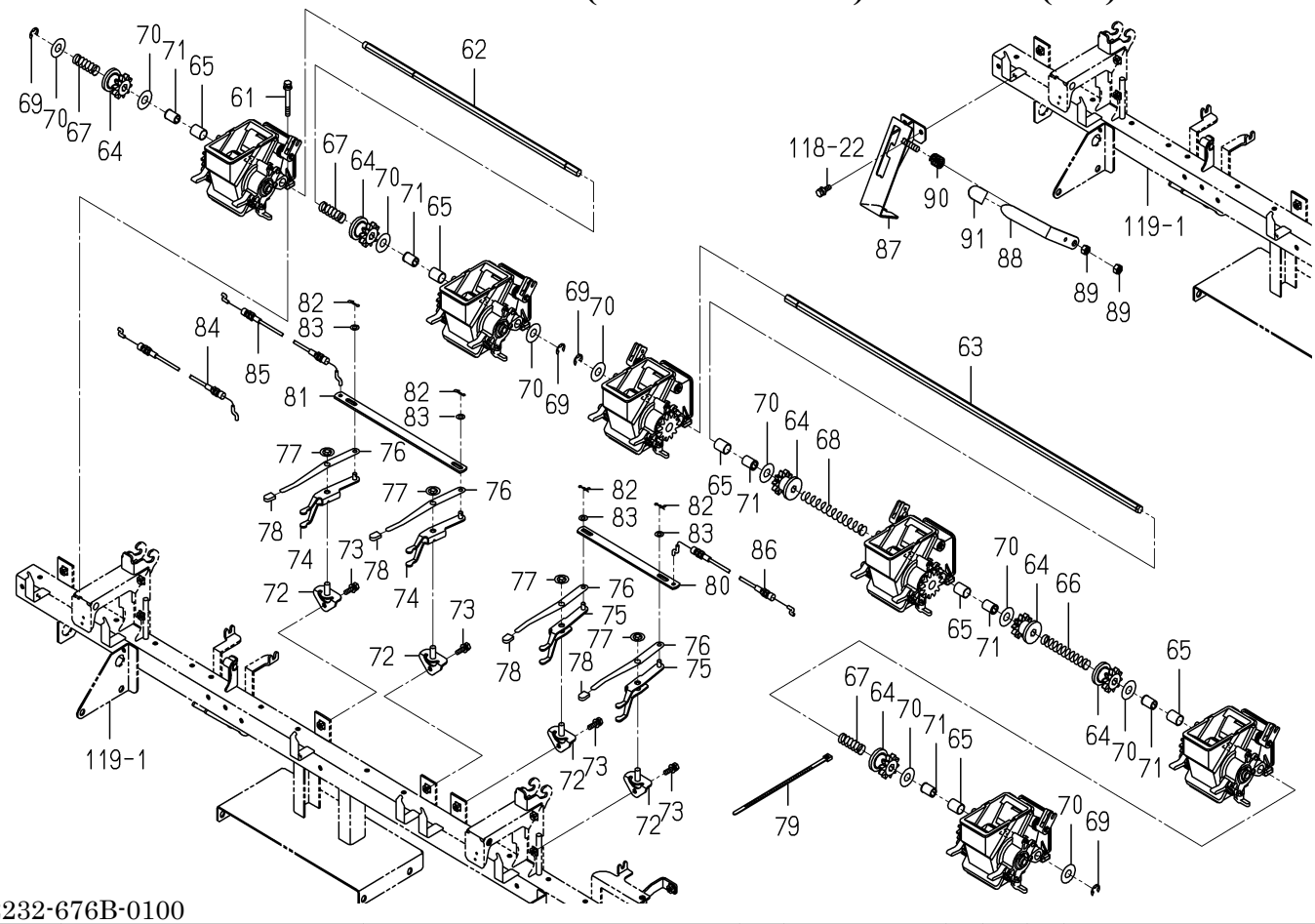

2232-676B-0100

KEY	PART CODE	DESCRIPTION	SPC	TYPE OF MODEL NP60E16		ITC	COL	GRP	REMARKS
91	8841-536-018-00	CAP	*	1					

FIG.121 HOPPER SYSTEM(FERTILIZER)SYSTEM

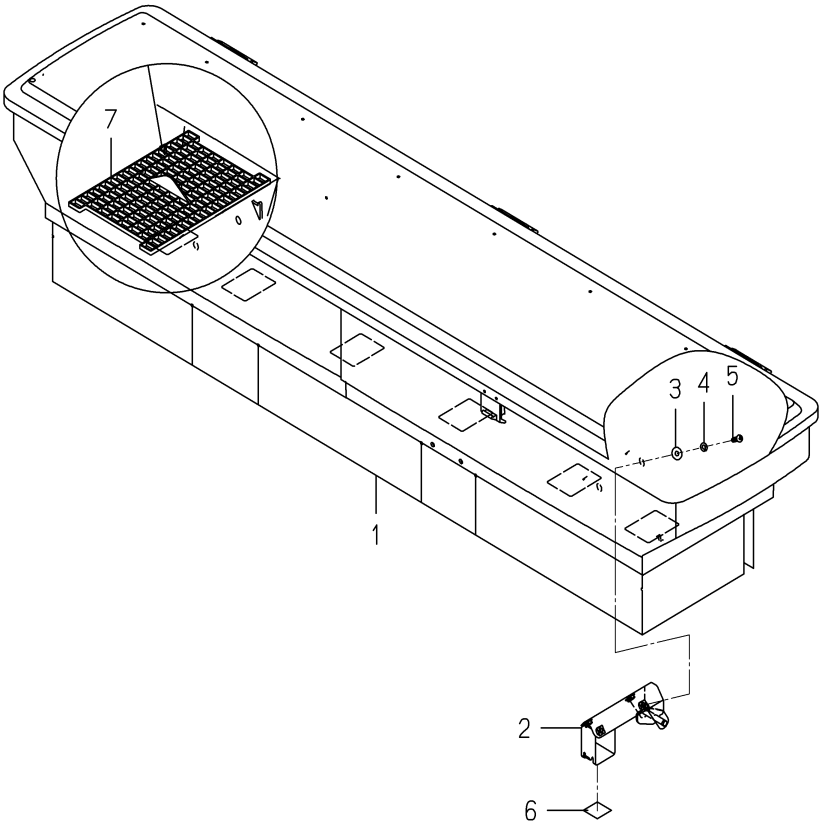

2232-686 -0100

KEY	PART CODE	DESCRIPTION	SPC	TYPE OF MODEL NP60E16		ITC	COL	GRP	REMARKS
1	2232-686-250-40	HOPPER/6Z COMP	*	1					FIG 154
2	2232-686-210-10	STAY/HOPPER COMP	*	2					
3	2182-803-008-00	WASHER/07X18X1.5	*	8					
4	V401-700-006-00	WASHER/LOCK	*	8					
5	V111-706-001-60	SCREW	*	8					
6	8842-605-004-10	PLATE,RUBBER/20X25X0	*	2					
7	2232-685-002-00	HOPPERNET	*	6					

FIG.122 PIPING(FERTILIZER)SYSTEM

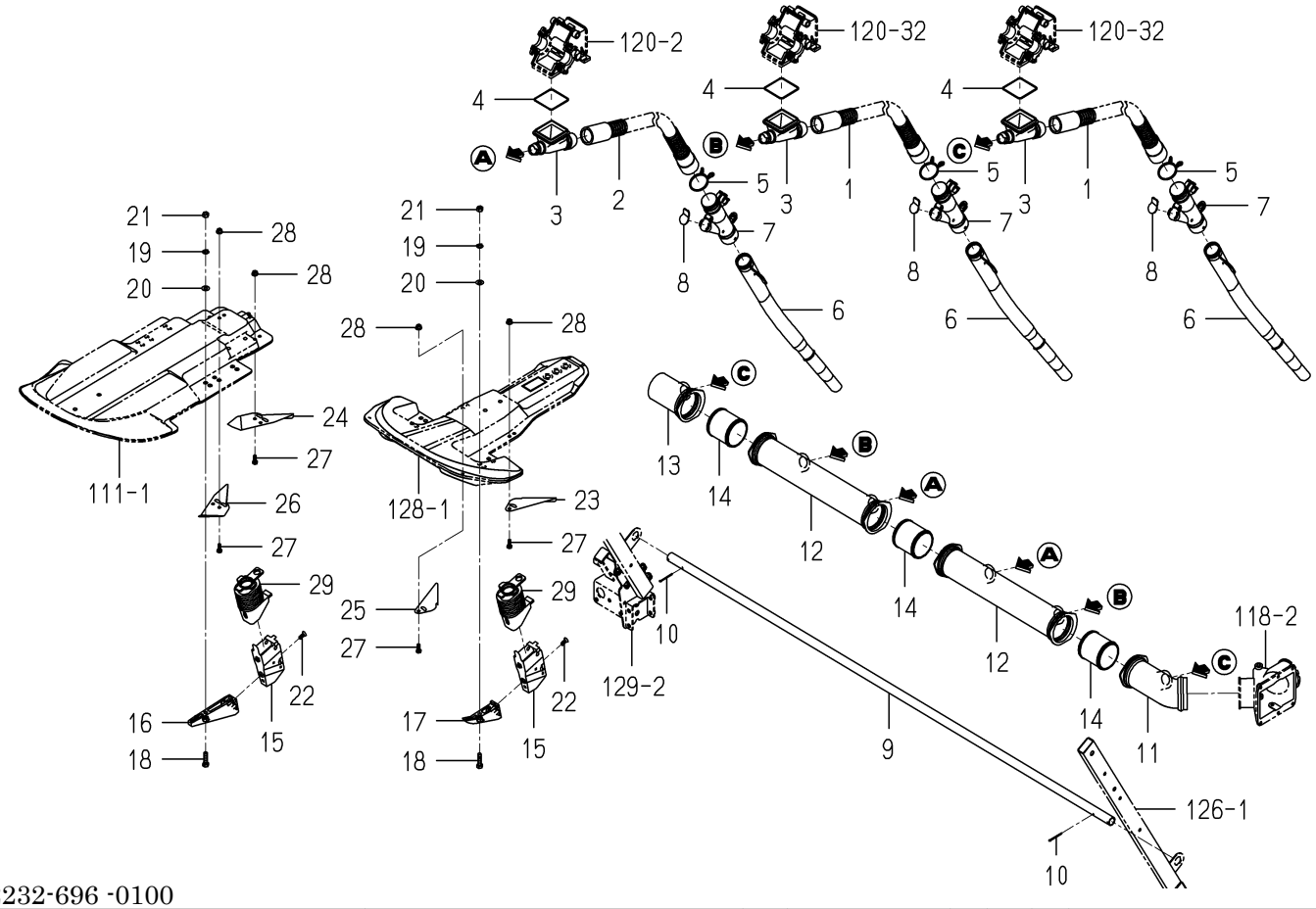

2232-696 -0100

KEY	PART CODE	DESCRIPTION	SPC	TYPE OF MODEL NP60E16		ITC	COL	GRP	REMARKS
1	8844-726-220-00	HOSE/FERTILIZER/6	*	4					
2	2232-696-400-00	HOSE/FERTILIZE/930	*	2					
3	2232-672-007-00	ROHTO	*	6					
4	2232-672-008-10	PACKING/ROHTO	*	6					
5	8836-706-006-10	CLAMP,SPRING/4	*	6					
6	2232-691-057-10	HOSE/FERTILIZER/STRA	*	6					
7	8844-725-310-10	HOSE/FERTILIZER/LOWE	*	6					
8	2232-696-002-00	WEIGHT/FERTILIZER HO	*	6					
9	2232-692-006-10	TUBE/HOSE/6	*	1					
10	2204-603-009-00	PIN/COTTER/2.5X35/SU	*	2					
11	2232-675-021-00	JOINT/FERTLIZE/LH	*	1					
12	2232-675-022-00	JOINT/FERTLIZE/CENTE	*	2					
13	2232-675-023-00	JOINT/FERTLIZE/RH	*	1					
14	2232-675-024-00	JOINT/66	*	3					
15	2232-696-300-00	DICTHER/NP	*	6					
16	2232-692-004-00	GUIDE/DICTHER/CENTER	*	2					
17	2232-692-005-00	GUIDE/DICTHER/SIDE	*	4					
18	V200-700-803-00	BOLT	*	6					
19	V401-700-008-00	WASHER/LOCK	*	6					
20	V411-700-008-00	WASHER	*	6					
21	V304-700-008-00	NUT	*	6					
22	8844-745-013-00	SCREW/6	*	6					
23	2232-691-054-00	PLATE/SOIL COVERING/	*	2					
24	8836-602-005-10	PLATE/SOIL COVERING/	*	1					
25	2232-691-055-00	PLATE/SOIL COVERING/	*	2					
26	8836-602-006-10	PLATE/SOIL COVERING/	*	1					
27	V200-700-601-60	BOLT	*	12					
28	2204-803-068-00	NUT/WASER/M6/SUS	*	12					
29	8844-746-007-00	CAP	*	6					

FIG.123 FRAME(SIDE)SYSTEM

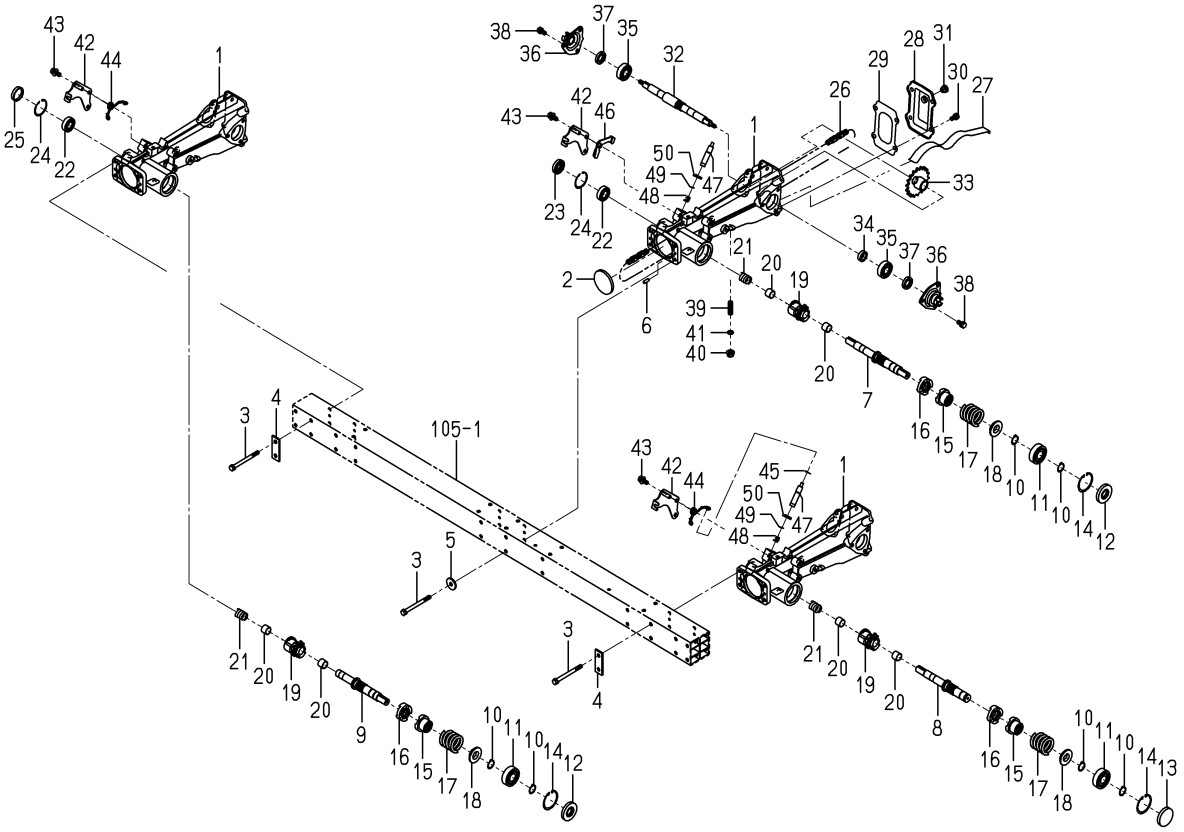

2232-701 -0100

KEY	PART CODE	DESCRIPTION	SPC	TYPE OF MODEL NP60E16		ITC	COL	GRP	REMARKS
1	2232-701-001-10	CASE/SUPPORTFRAME	*	3					
2	3640-547-007-00	PLUG,CAP/62X6	*	3					
3	2232-603-003-00	BOLT/M8X90	*	10					
4	2232-603-002-00	PLATE/I/24X64	*	4					
5	3740-314-017-00	WASHER,TENSION	*	2					
6	V522-100-601-60	PIN	*	6					
7	2232-701-011-00	SHAFT/PLANTING/DRIVE	*	1					
8	2232-701-042-00	SHAFT/PLANTING/DRIVE	*	1					
9	2232-701-043-00	SHAFT/PLANTING/DRIVE	*	1					
10	V704-140-020-00	RING,SNAP/20 C	*	6					
11	V600-110-620-40	BEARING,RB/6204	*	3					
12	V744-120-470-70	SEAL,OIL/TC20477	*	2					
13	2194-701-010-00	PLUG/47	*	1					
14	V705-140-047-00	RING,SNAP/47 C	*	3					
15	2232-701-009-00	STOP/SAFETY/DRIVE	*	3					
16	2232-701-023-00	STOP/SAFETY/DRIVEN	*	3					
17	2232-701-020-00	SPRING/HC043	*	3					
18	2232-701-016-00	HOLDER/SPRING	*	3					
19	2232-701-002-00	SPROCKET/CLUTCH	*	3					
20	2213-701-023-00	BUSH/17X19X15	*	6					
21	2194-701-020-00	SPRING	*	3					
22	V600-110-600-30	BEARING,RB/6003	*	3					
23	V744-117-350-70	SEAL,OIL/TC17357	*	2					
24	V705-140-035-00	RING,SNAP/35 C	*	3					
25	3737-211-007-00	CAP/35	*	1					
26	2232-701-017-00	CHAIN/ROLLER/60	*	3					
27	2232-701-006-10	TIGHTNER/SUPPORT FRA	*	3					
28	2161-701-005-00	COVER	*	3					
29	2161-701-006-10	GASKET	*	3					
30	V211-260-801-60	BOLT,SEMS (S) M8X16	*	12					

FIG.123 FRAME(SIDE)SYSTEM

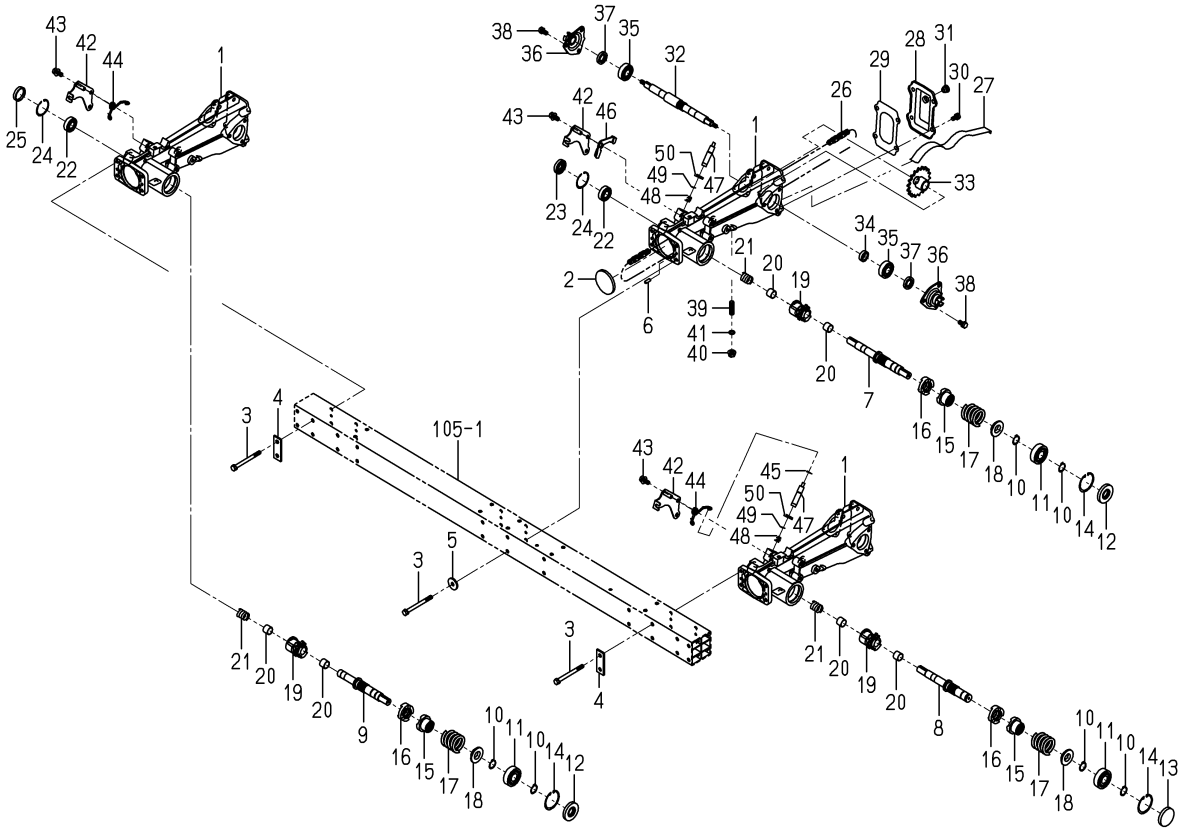

2232-701 -0100

KEY	PART CODE	DESCRIPTION	SPC	TYPE OF MODEL NP60E16		ITC	COL	GRP	REMARKS
31	2142-736-236-00	PLUG	*	3					
32	2232-701-004-00	SHAFT/PLANTINGARM	*	3					
33	2232-701-022-30	SPROCKET/18	*	3					
34	2232-701-003-00	COLLAR/17X25X08	*	3					
35	V600-110-620-30	BEARING,RB/6203	*	6					
36	2186-703-220-02	METAL/S COMP	*	6			5N		
37	V740-117-300-60	SEAL,OIL/SC17306	*	6					
38	V211-260-801-60	BOLT,SEMS (S) M8X16	*	18					
39	2213-701-003-10	BOLT/TENSIONER/M10X3	*	3					
40	2213-701-001-10	NUT/FLANGE/M10	*	3					
41	V720-101-901-00	O-RING/P10	*	3					
42	2232-701-220-20	STAY/AZECLUTCH COMP	*	3					
43	V211-360-802-00	BOLT/SP	*	3					
44	2232-701-024-00	SPRING/HT013	*	2					
45	3560-503-302-00	WASHER,WIRE TENSION	*	2					
46	2232-701-270-00	ARM/CLUTCH/AZE COMP	*	1					
47	2232-701-012-00	PIN/AZECLUTCH	*	3					
48	2232-701-013-00	SPRING/HC013	*	3					
49	V704-140-012-00	RING,SNAP/12 C	*	3					
50	2145-751-003-00	SEAL,OIL	*	3					

FIG.124 DRIVE(PLANTING)SYSTEM

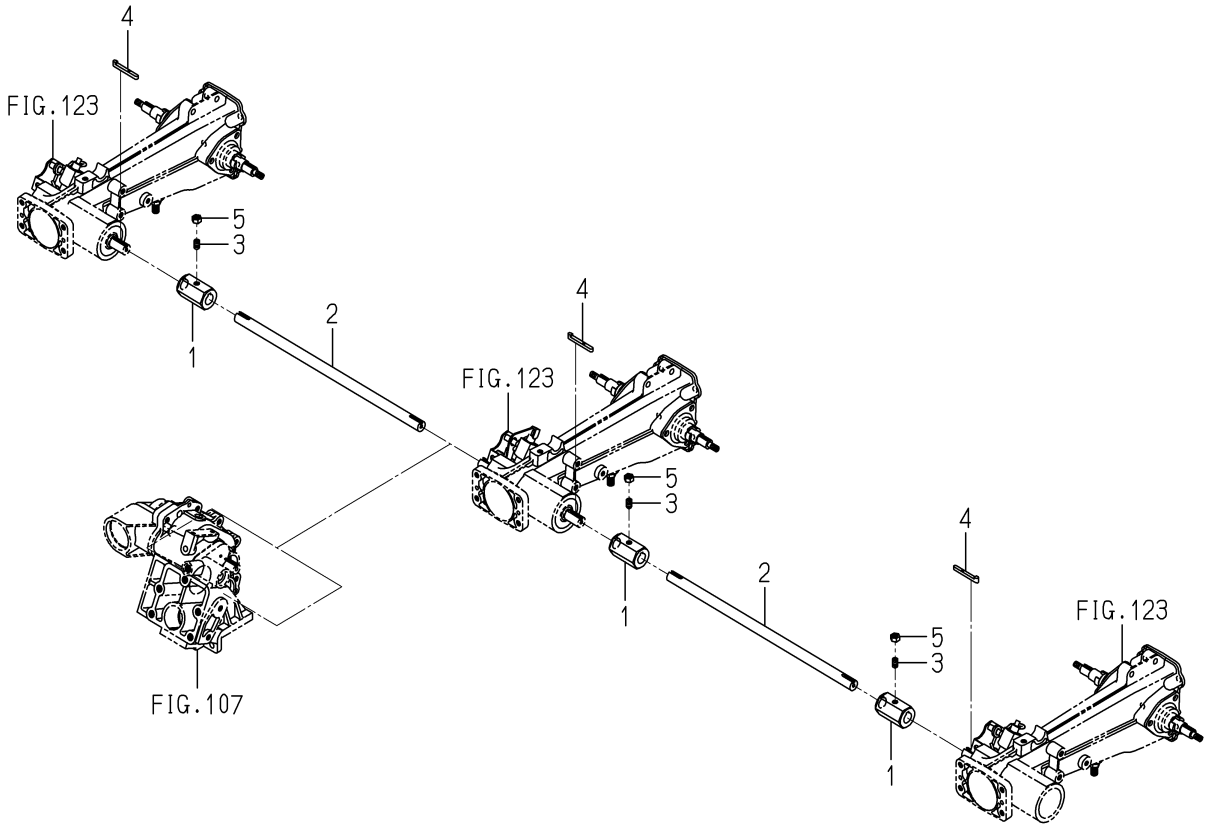

2232-702 -0100

KEY	PART CODE	DESCRIPTION	SPC	TYPE OF MODEL NP60E16		ITC	COL	GRP	REMARKS
1	2232-702-001-00	COUPLING/DRAIVE	*	3					
2	2232-702-002-00	SHAFT/DRIVE/6	*	2					
3	3922-420-211-00	SCREW/SET	*	3					
4	2232-702-007-00	KEY/05X05X51	*	3					
5	V304-260-008-00	NUT	*	3					

FIG.125 LUBRICATION(SLIDER)SYSTEM

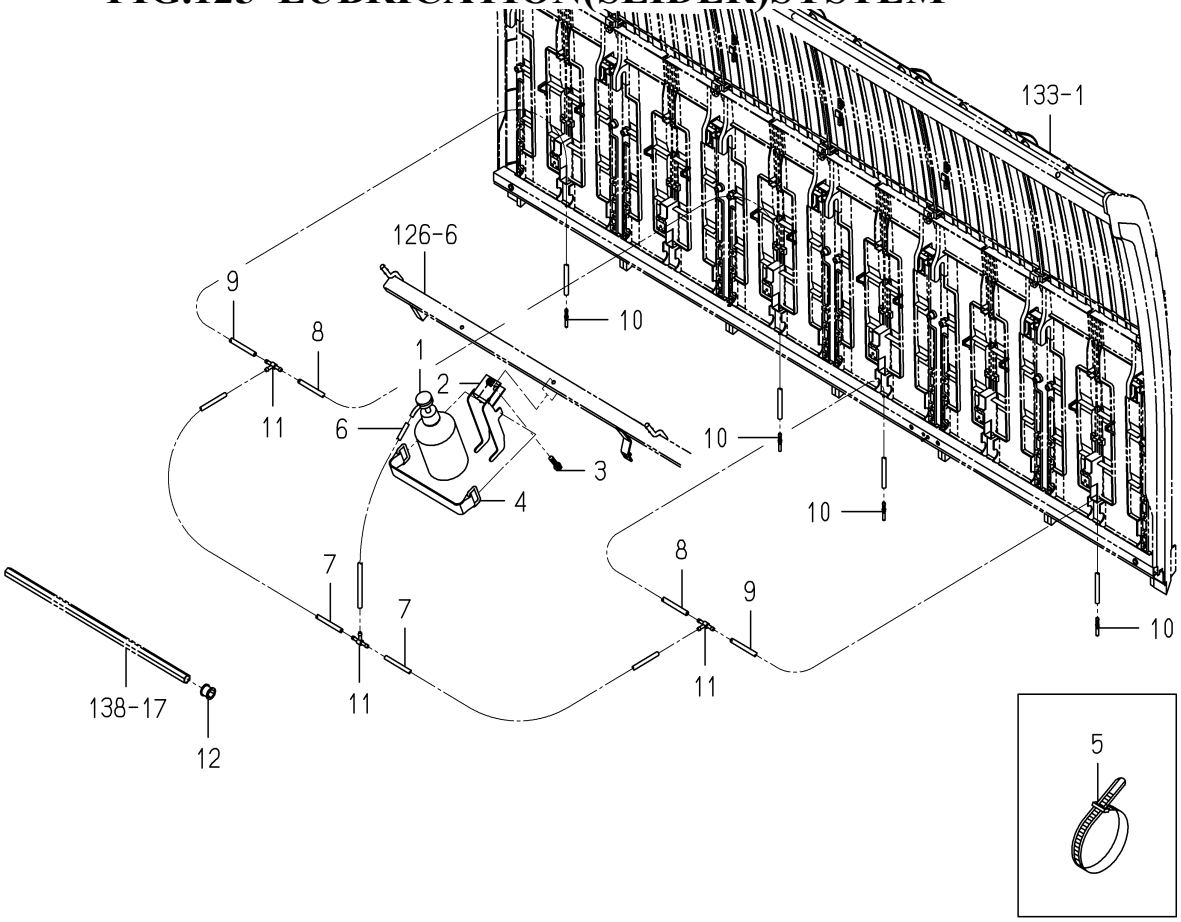

2232-703A-0100

KEY	PART CODE	DESCRIPTION	SPC	TYPE OF MODEL NP60E16		ITC	COL	GRP	REMARKS
1	2213-703-210-00	PUMP/OIL SET	*	1					
2	2232-703-200-00	STAY/TANK COMP	*	1					
3	V211-260-803-50	BOLT(S) M8X35	*	1					
4	3640-260-200-30	BATTERYSTAY COMP	*	1					
5	1376-402-003-00	BAND,WIRE/140	*	2					
6	2220-703-001-00	HOSE/08X1160	*	1					
7	2204-801-018-00	HOSE/08X850	*	2					
8	2204-801-019-00	HOSE/08X730	*	2					
9	2213-801-008-00	HOSE/08X430	*	2					
10	2213-801-014-00	NOZZLE/OIL	*	4					
11	3632-360-036-00	JOINTT-TYPE 2	*	3					
12	2186-805-011-00	BUSH,SEEDLING	*	4					

FIG.126 FRAME(TANK/SEEDLING)SYSTEM

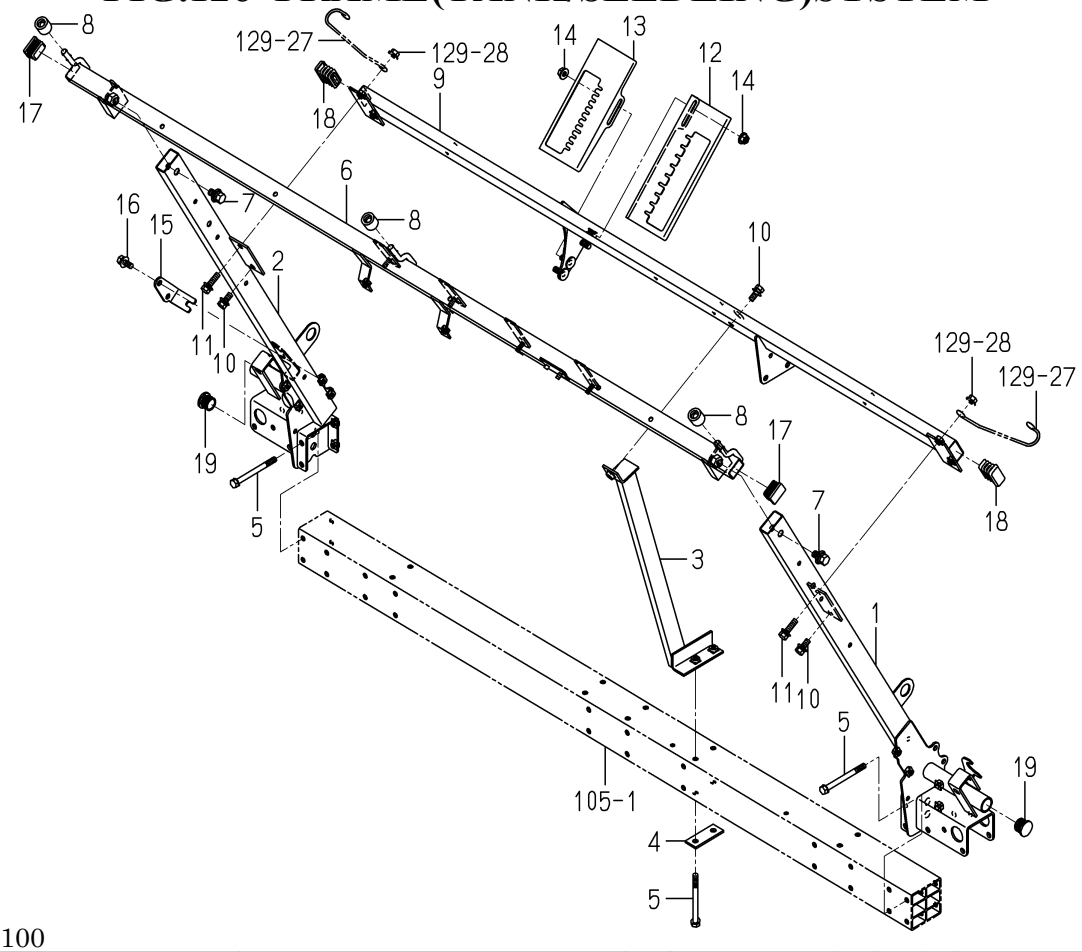

2232-705 -0100

KEY	PART CODE	DESCRIPTION	SPC	TYPE OF MODEL NP60E16		ITC	COL	GRP	REMARKS
1	2232-705-200-30	STAY/SEEDLING TANK/L	*	1					
2	2232-705-220-30	STAY/SEEDLING TANK/R	*	1					
3	2232-705-250-00	STAY/SEEDLING TANK/C	*	1					
4	2232-603-002-00	PLATE/I/24X64	*	1					
5	2232-603-003-00	BOLT/M8X90	*	6					
6	2232-705-240-20	FRAME/UPPER/6 COMP	*	1					
7	V211-361-002-00	BOLT,SEMS	*	2					
8	2130-802-011-10	ROLLER,SEEDLING TANK	*	3					
9	2232-705-230-10	FRAME/LOWER/6 COMP	*	1					
10	V211-360-802-00	BOLT/SP	*	3					
11	V211-360-803-00	BOLT/SP	*	2					
12	2232-705-001-10	PLATE/GUIDE/DEPTH	*	1					
13	2232-705-002-10	PLATE/GUIDE/PICKING	*	1					
14	V362-260-008-00	NUT/WASHER	*	4					
15	2232-705-004-00	HOLDER/CABLE/SEND	*	1					
16	V211-360-802-00	BOLT/SP	*	2					
17	2204-513-026-00	CAP/30X20	*	2					
18	2204-513-003-00	CAP,SEEDLING FRAME/P	*	2					
19	2213-516-006-00	CAP/22X15	*	2					

FIG.127 LEVER(PICKING/SEEDLING)SYSTEM

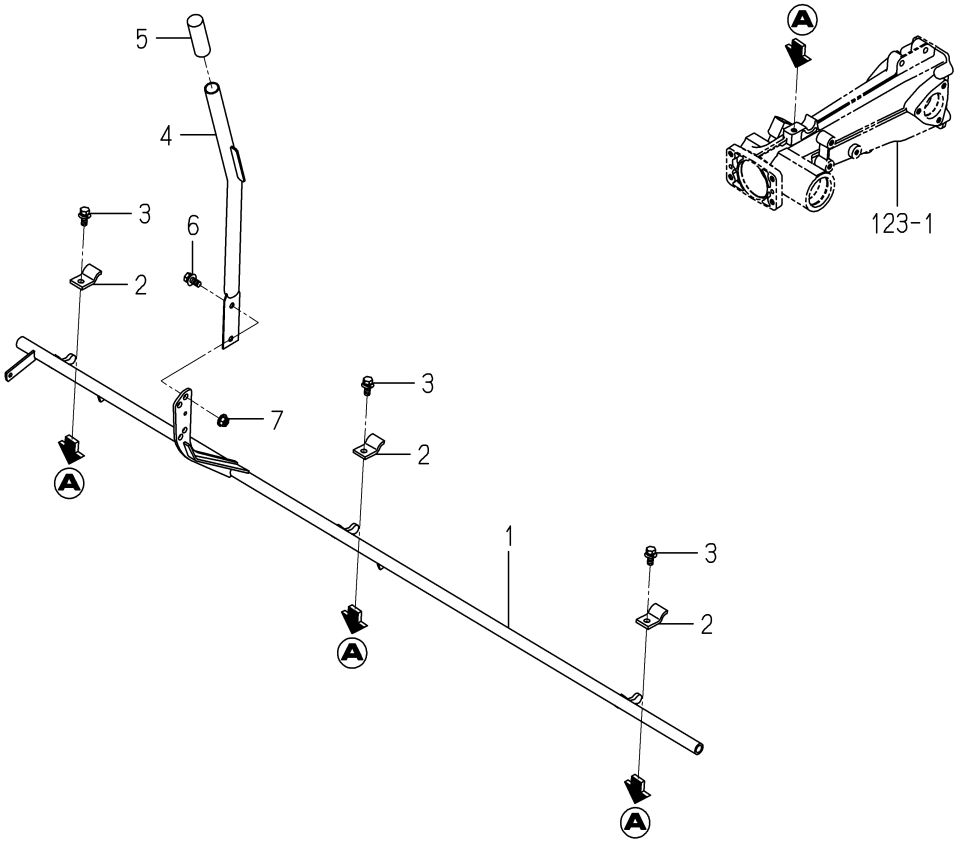

2232-706 -0100

KEY	PART CODE	DESCRIPTION	SPC	TYPE OF MODEL NP60E16		ITC	COL	GRP	REMARKS
1	2232-706-200-00	TUBE/SEEDLING PICKIN	*	1					
2	2204-706-011-10	PLATE/HOLDER/PLANTIN	*	3					
3	V211-360-802-00	BOLT/SP	*	3					
4	2232-706-210-00	LEVER/PICKING COMP	*	1					
5	2183-613-003-00	GRIP	*	1					
6	V211-360-802-00	BOLT/SP	*	2					
7	V362-260-008-00	NUT/WASHER	*	2					

FIG.128 FLOAT(SIDE)SYSTEM

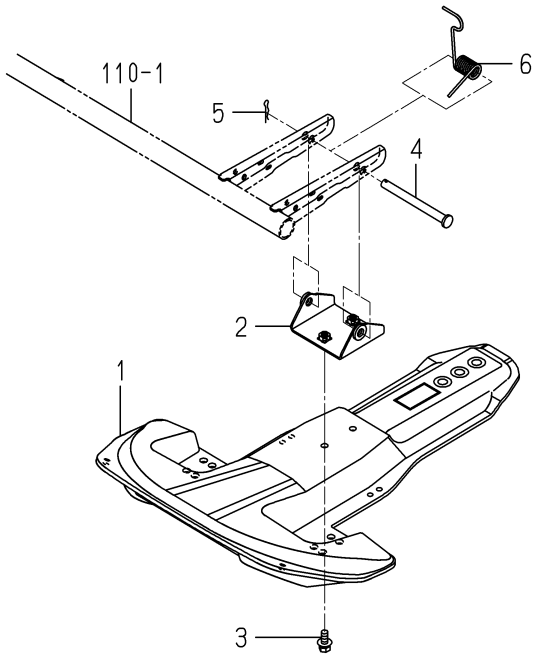

2232-710 -0100

KEY	PART CODE	DESCRIPTION	SPC	TYPE OF MODEL NP60E16		ITC	COL	GRP	REMARKS
1	2232-710-012-00	FLOAT/SIDE/NP	*	2					
2	2232-710-260-00	STAY/FLOAT/SIDE COMP	*	2					
3	V211-360-802-00	BOLT/SP	*	4					
4	3656-223-011-00	PIN/10X113	*	2					
5	3505-704-003-00	PIN,HAIR (10)	*	2					
6	2232-710-017-10	SPRING/HT017/S	*	2					

FIG.129 MARKER SYSTEM

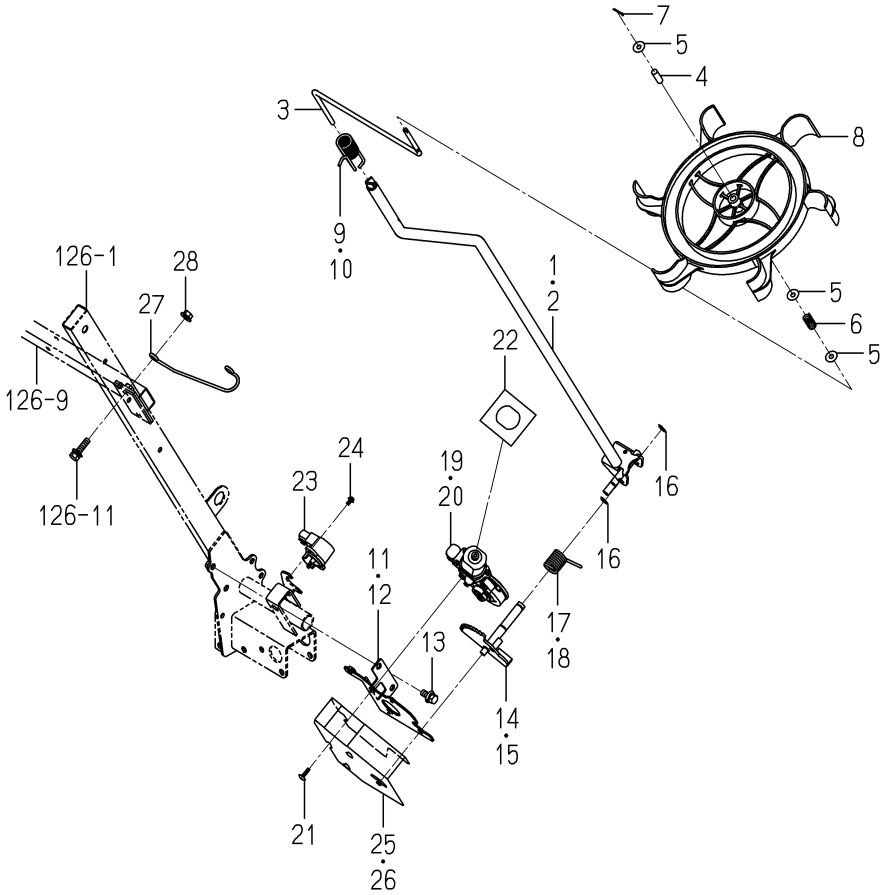

2232-711 -0100

KEY	PART CODE	DESCRIPTION	SPC	TYPE OF MODEL NP60E16		ITC	COL	GRP	REMARKS
1	2232-711-240-20	TUBE/MARKER/6L COMP	*	1					
2	2232-711-250-20	TUBE/MARKER/6R COMP	*	1					
3	2232-711-005-00	ROD/MARKER/WATER WHE	*	2					
4	2183-526-001-10	HUB,MARKER	*	2					
5	3560-503-302-00	WASHER,WIRE TENSION	*	6					
6	2186-707-006-00	SPRING/HC029	*	2					
7	2186-707-001-00	PIN,COTTER/2.5X15/SU	*	2					
8	2232-711-014-00	LINEMARKER/NP	*	2					
9	2232-711-007-00	SPRING/MARKER/REAR/L	*	1					
10	2232-711-008-00	SPRING/MARKER/REAR/R	*	1					
11	2232-711-200-10	BASE/MARKER/LH COMP	*	1					
12	2232-711-210-10	BASE/MARKER/RH COMP	*	1					
13	V211-360-802-00	BOLT/SP	*	4					
14	2232-711-220-40	GEAR/MARKER/LH COMP	*	1					
15	2232-711-230-40	GEAR/MARKER/RH COMP	*	1					
16	V704-140-012-00	RING,SNAP/12 C	*	4					
17	2232-711-003-00	SPRING/HT020/LH	*	1					
18	2232-711-004-00	SPRING/HT020/RH	*	1					
19	3888-726-200-00	MOTOR/LH ASSY	*	1					
20	2232-711-270-00	MOTOR/RH ASSY	*	1					
21	3888-218-001-00	TAPPINGSCREW/M5X16	*	6					
22	2232-711-011-00	COVER/MOTOR	*	2					
23	1729-662-340-00	SENSOR/ANGLE/110/R	*	2					
24	V120-364-001-00	SCREW/SP	*	4					
25	2232-711-001-00	COVER/MARKER/LH	*	1			5N		
26	2232-711-002-00	COVER/MARKER/RH	*	1			5N		
27	2232-711-013-00	HOOK/MARKER	*	2					
28	V362-260-008-00	NUT/WASHER	*	2					

FIG.130 GUARD(PLATE/FRONT)SYSTEM

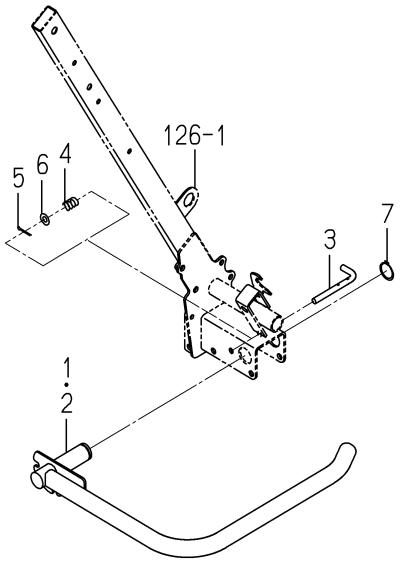

2232-713 -0100

KEY	PART CODE	DESCRIPTION	SPC	TYPE OF MODEL NP60E16		ITC	COL	GRP	REMARKS
1	2232-713-200-10	GUARD/RAIL/LH COMP	*	1					
2	2232-713-210-10	GUARD/RAIL/RH COMP	*	1					
3	2232-713-002-00	PIN/LOCK/STAND	*	2					
4	2190-805-012-00	SPRING,HC030	*	2					
5	V500-163-002-00	PIN,SPLIT/3 X20	*	2					
6	V411-260-008-00	WASHER,PL/M 8	*	2					
7	V704-140-025-00	RING,SNAP/25 C	*	2					

FIG.131 PLANTER(LH)SYSTEM

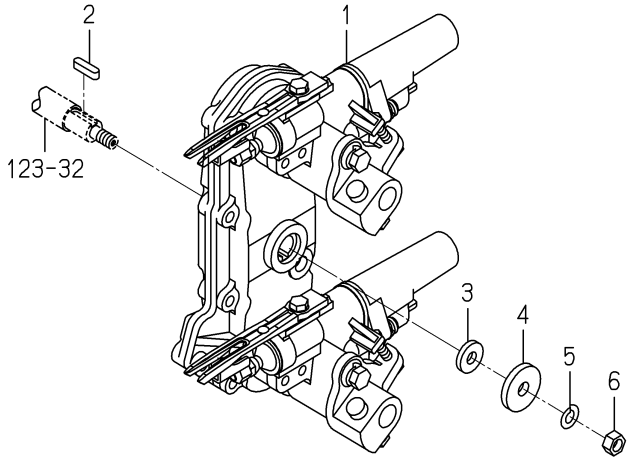

2204-738K-0100

KEY	PART CODE	DESCRIPTION	SPC	TYPE OF MODEL NP60E16		ITC	COL	GRP	REMARKS
1	2204-738-440-40	ROTARY PLANTING/K/LH	*	3					FIG 152
2	3750-231-013-00	KEY,SPROCKET	*	3					
3	2142-736-203-10	PACKING	*	3					
4	2132-161-005-00	WASHER,PULLEY	*	3					
5	V401-160-008-00	WASHER,SP/M 8	*	3					
6	V304-460-008-00	NUT/M8	*	3					

FIG.132 PLANTER(RH)SYSTEM

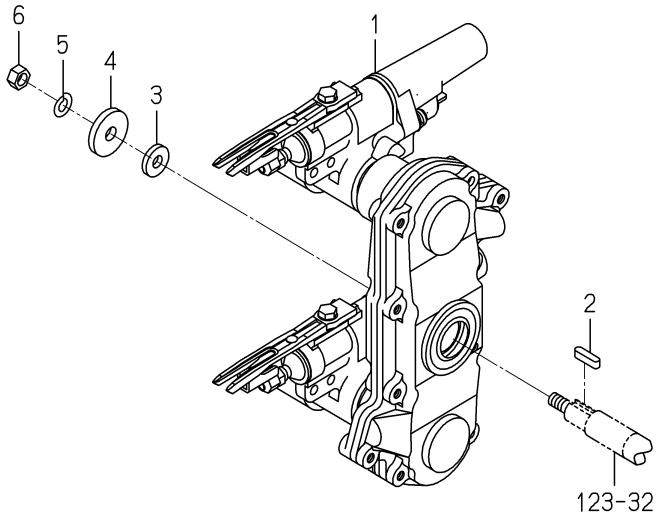

2204-739K-0100

KEY	PART CODE	DESCRIPTION	SPC	TYPE OF MODEL NP60E16		ITC	COL	GRP	REMARKS
1	2204-739-440-40	ROTARYPLANTING/K/RH	*	3					FIG 153
2	3750-231-013-00	KEY,SPROCKET	*	3					
3	2142-736-203-10	PACKING	*	3					
4	2132-161-005-00	WASHER,PULLEY	*	3					
5	V401-160-008-00	WASHER,SP/M 8	*	3					
6	V304-460-008-00	NUT/M8	*	3					

FIG.133 TANK(SEEDLING)SYSTEM

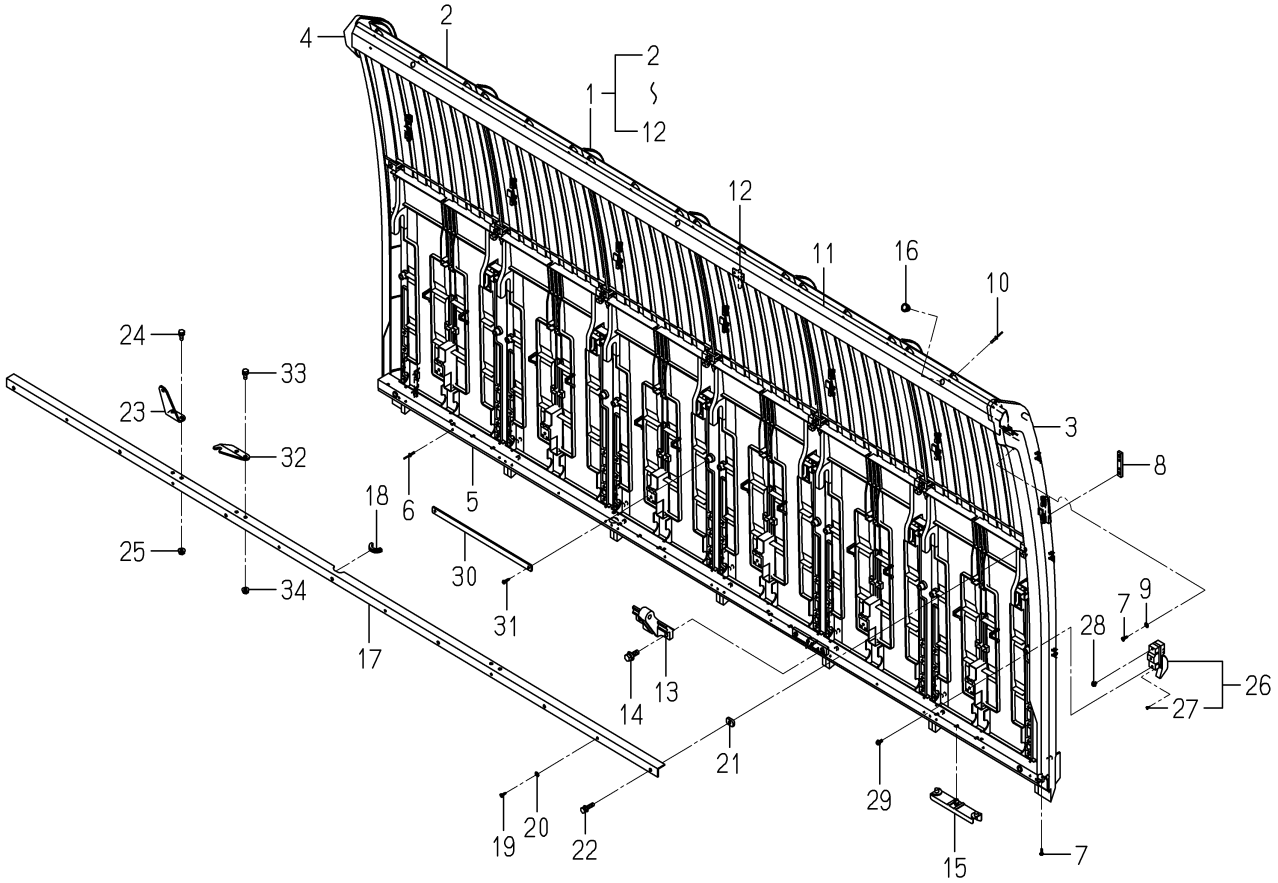

2232-801E-0100

KEY	PART CODE	DESCRIPTION	SPC	TYPE OF MODEL NP60E16		ITC	COL	GRP	REMARKS
1	2232-801-250-00	SEEDLINGTANK/6E COMP	*	1					
2	2161-831-231-30	SEEDLINGTANK	*	6					
3	2186-801-701-00	COVER,SEEDING TANK/M	*	1					
4	2186-801-702-00	COVER,SEEDING TANK/M	*	1					
5	2232-801-260-00	RAIL/LOWER/6E COMP	*	1					
6	2130-802-208-00	RIVET,POP	*	32					
7	2161-831-211-00	PIN, TAPPING	*	4					
8	2161-834-004-00	PLATE	*	14					
9	V411-260-004-00	WASHER,PL/M 4	*	2					
10	2161-831-209-00	B-RIVET/ALMI	*	18					
11	2232-801-251-00	RAIL/SEEDLING TANK U	*	1					
12	2232-801-220-00	SENSOR/STOP SWITCH	*	1					
13	2232-801-001-00	ARM/SEEDLINGTANK	*	1					
14	V211-360-802-50	BOLT/SP	*	2					
15	2161-831-003-10	SLIDER PLATE(E12)	*	4					
16	2186-738-038-20	CAP/10	*	3					
17	2232-801-003-00	RAIL/SEEDLING TANK/I	*	1					
18	2186-801-001-00	GROMMET/20/SEEDING T	*	1					
19	2161-831-211-00	PIN, TAPPING	*	6					
20	V411-260-004-00	WASHER,PL/M 4	*	6					
21	2161-831-007-00	PLATE	*	7					
22	V210-360-602-50	BOLT/SP	*	7					
23	2232-801-006-00	PLATE/HOOK/SEEDLING	*	2					
24	V210-260-601-60	BOLT/S	*	4					
25	V360-260-006-00	NUT/M6	*	4					
26	2132-801-220-10	SWITCH ASSY	*	6					
27	V195-102-504-40	SCREW/TAPPING	*	6					
28	V120-364-000-80	SCREW/SP	*	6					
29	V120-364-001-20	SCREW,SP/M4X12	*	6					
30	2186-805-026-00	PLATE/1R/13X280	*	6					

FIG.133 TANK(SEEDLING)SYSTEM

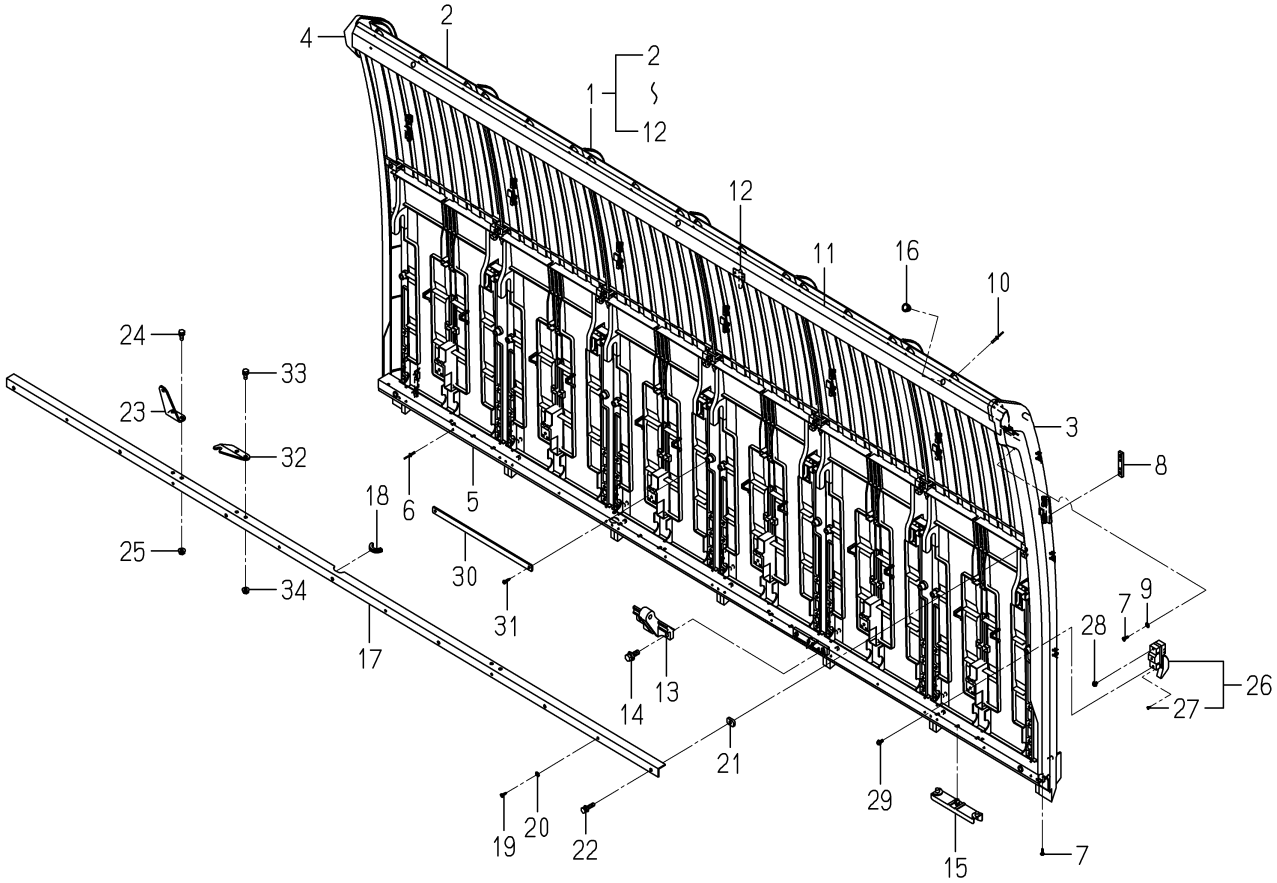

2232-801E-0100

KEY	PART CODE	DESCRIPTION	SPC	TYPE OF MODEL NP60E16		ITC	COL	GRP	REMARKS
31	V195-164-016-10	SCREW/TAPPING	*	12					
32	2232-801-005-00	PLATE/SEEDLING FEED	*	1					
33	V210-260-601-60	BOLT/S	*	2					
34	V360-260-006-00	NUT/M6	*	2					

FIG.134 REFLECTOR SYSTEM

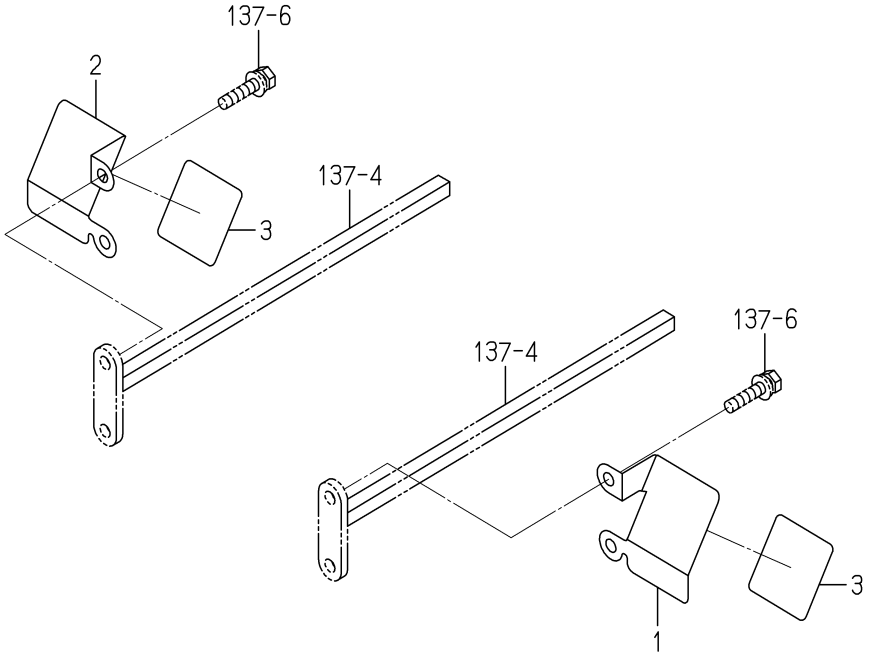

2232-802 -0100

KEY	PART CODE	DESCRIPTION	SPC	TYPE OF MODEL NP60E16		ITC	COL	GRP	REMARKS
1	2232-802-001-00	PLATE/REFLECTOR/LH	*	1					
2	2232-802-002-00	PLATE/REFLECTOR/RH	*	1					
3	2194-901-016-00	LABEL/FRASH	*	2					

FIG.135 WINKER SYSTEM

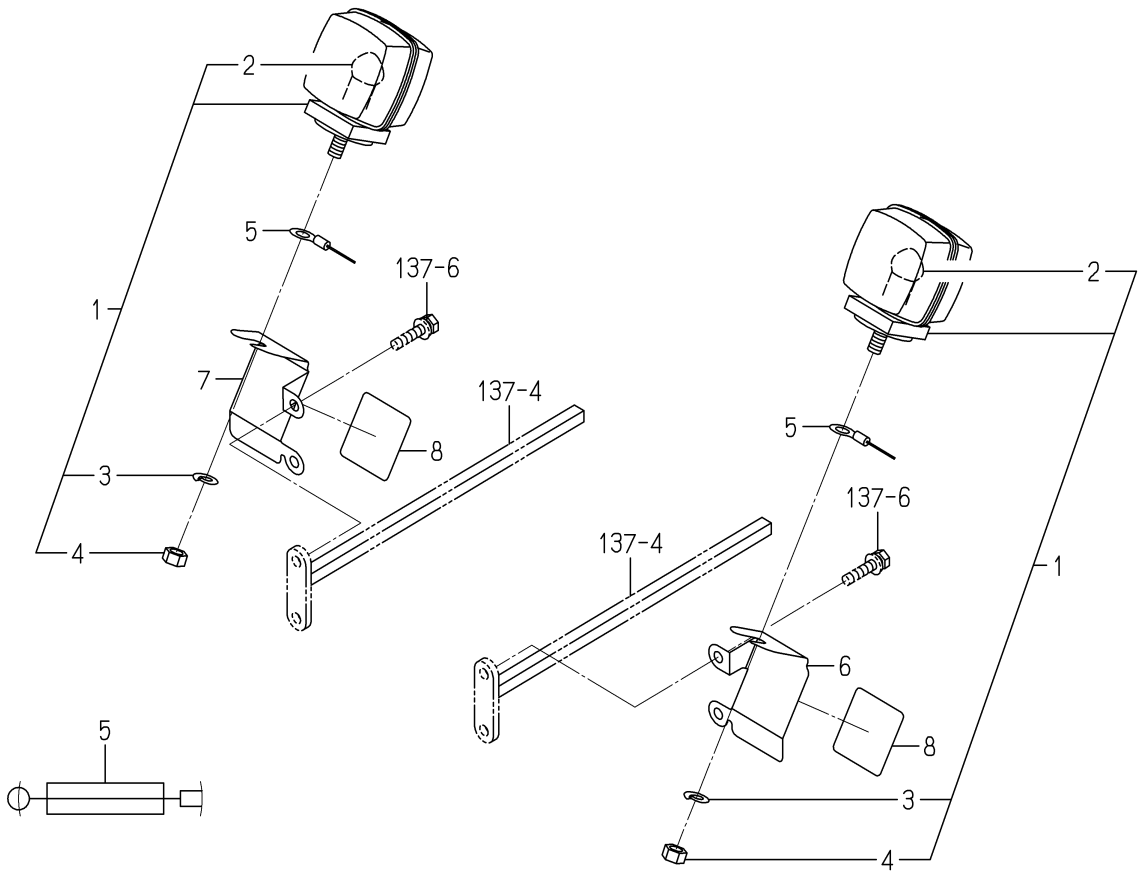

2232-802B-0100

KEY	PART CODE	DESCRIPTION	SPC	TYPE OF MODEL NP60E16		ITC	COL	GRP	REMARKS
1	2132-544-200-10	LAMP/TURNSIGNAL ASSY	*	2					
2	1444-621-242-00	BULB/12V 20W	*	2					
3	V401-160-008-00	WASHER,SP/M 8	*	2					
4	V304-260-008-00	NUT	*	2					
5	2186-802-051-00	HARNESS,WINKER WIRE/	*	2					
6	2232-802-051-00	PLATE/WINKER/LH	*	1					
7	2232-802-052-00	PLATE/WINKER/RH	*	1					
8	2194-901-016-00	LABEL/FRASH	*	2					

FIG.136 PLATE(FRONT)SYSTEM

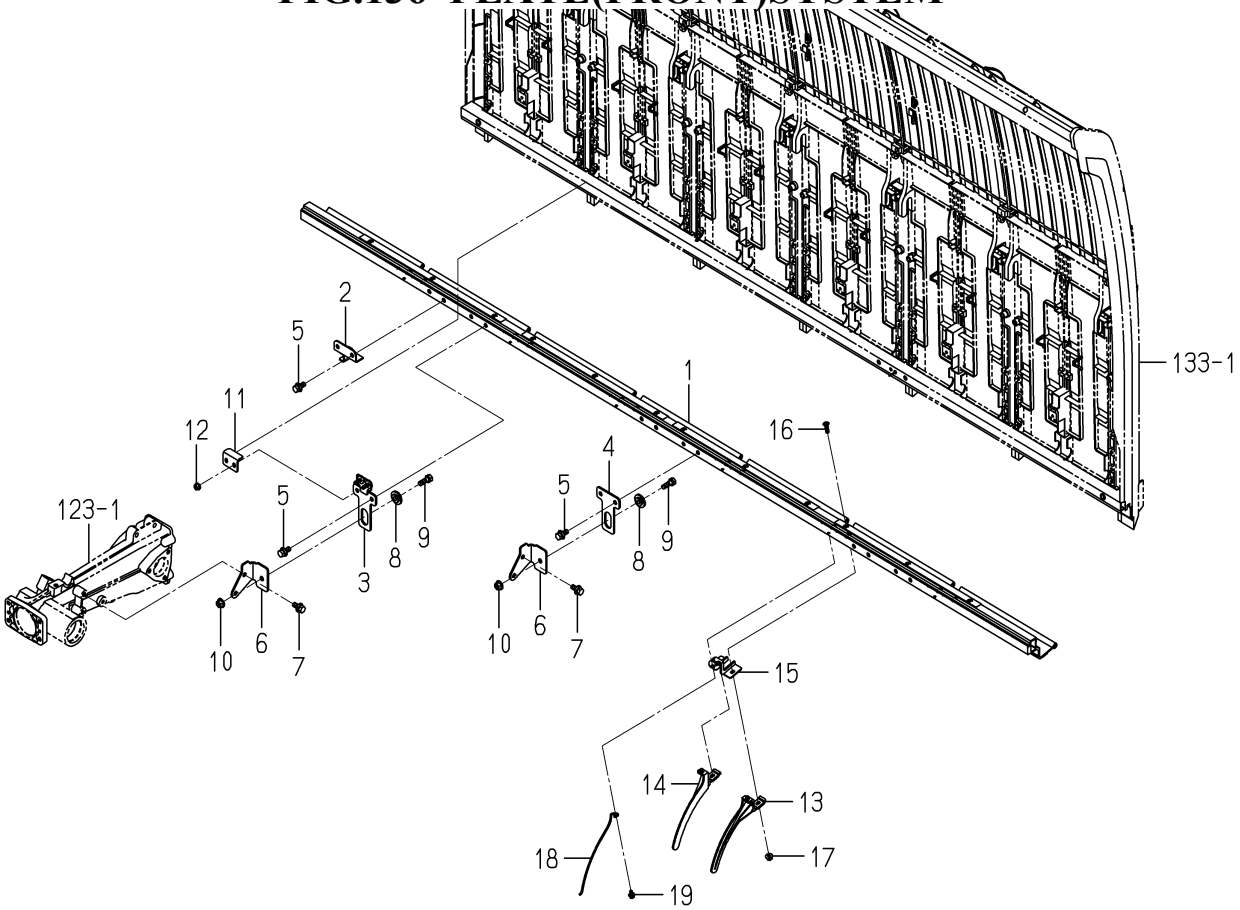

2232-803H-0100

KEY	PART CODE	DESCRIPTION	SPC	TYPE OF MODEL NP60E16		ITC	COL	GRP	REMARKS
1	2232-803-320-00	RAIL/TANK/NP6/E16	*	1					
2	2232-803-220-00	STAY/RAIL COMP	*	3					
3	2232-803-210-00	PLATE/SLIDER/HOOK	*	2					
4	2232-803-003-00	PLATE/SLIDER	*	1					
5	V211-360-802-00	BOLT/SP	*	12					
6	2232-803-001-00	STAY/SLIDER/OUTER	*	3					
7	V211-360-802-00	BOLT/SP	*	6					
8	2139-807-005-00	COLLAR SLIDE METAL	*	3					
9	V211-260-802-50	BOLT/S	*	3					
10	V362-260-008-00	NUT/WASHER	*	3					
11	2213-803-009-10	PLATE/STOPPER/TANK/8	*	2					
12	V360-260-006-00	NUT/M6	*	4					
13	2204-803-015-20	GUIDE/SEEDLING/LH/PZ	*	6					
14	2204-803-016-20	GUIDE/SEEDLING/RH/PZ	*	6					
15	2204-803-350-00	PLATE/GUIDE/E16 COMP	*	6					
16	V112-706-002-00	SCREW/FLAT	*	12					
17	2204-803-068-00	NUT/WASER/M6/SUS	*	12					
18	2204-803-025-00	WIRE,SEEDING GUIDE/P	*	6					
19	2204-803-024-00	BOLT/M5X12/SP/STAINL	*	6					

FIG.137 HOLDER(SEEDLING)SYSTEM

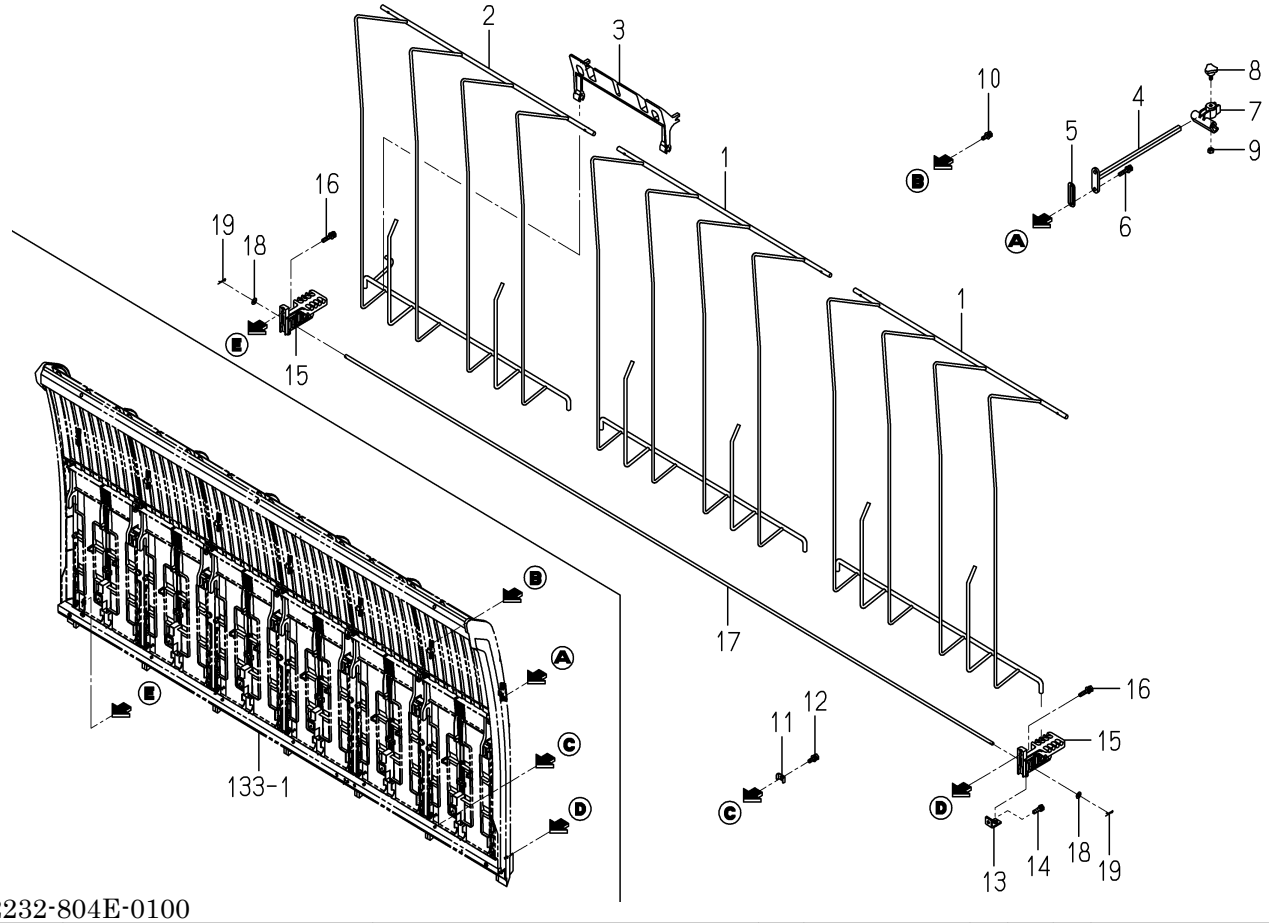

2232-804E-0100

KEY	PART CODE	DESCRIPTION	SPC	TYPE OF MODEL NP60E16		ITC	COL	GRP	REMARKS
1	2186-804-300-00	STAY,6/M COMP	*	2					
2	2204-804-400-00	FRAME/6/PZ	*	1					
3	2188-804-004-00	STOPPER,SEED/6/K	*	1					
4	2232-804-400-00	HOLDER/SEEDLING HOLD	*	4					
5	2213-804-007-00	SPACER/OUTER/RH	*	4					
6	V210-360-603-00	BOLT/SP	*	8					
7	2232-804-001-00	HOLDER/SEEDLING HOLD	*	4					
8	1716-601-003-00	BOLT/KNOB/M06X13	*	4					
9	V301-260-006-00	NUT/M6	*	4					
10	V210-360-602-00	BOLT/SP	*	6					
11	2204-831-001-00	PLATE/SEEDLINGTANK	*	3					
12	V210-360-602-00	BOLT/SP	*	6					
13	2161-834-007-00	PLATE	*	4					
14	V210-360-602-00	BOLT/SP	*	4					
15	2161-834-001-40	HOLDER/RESISTANTBAR	*	4					
16	V210-360-603-00	BOLT/SP	*	4					
17	2186-804-008-00	SHAFT/6/K	*	1					
18	V411-260-006-00	WASHER / M6	*	2					
19	2130-601-018-00	PIN,SNAP/6	*	2					

FIG.138 FEED(SEEDLING)SYSTEM

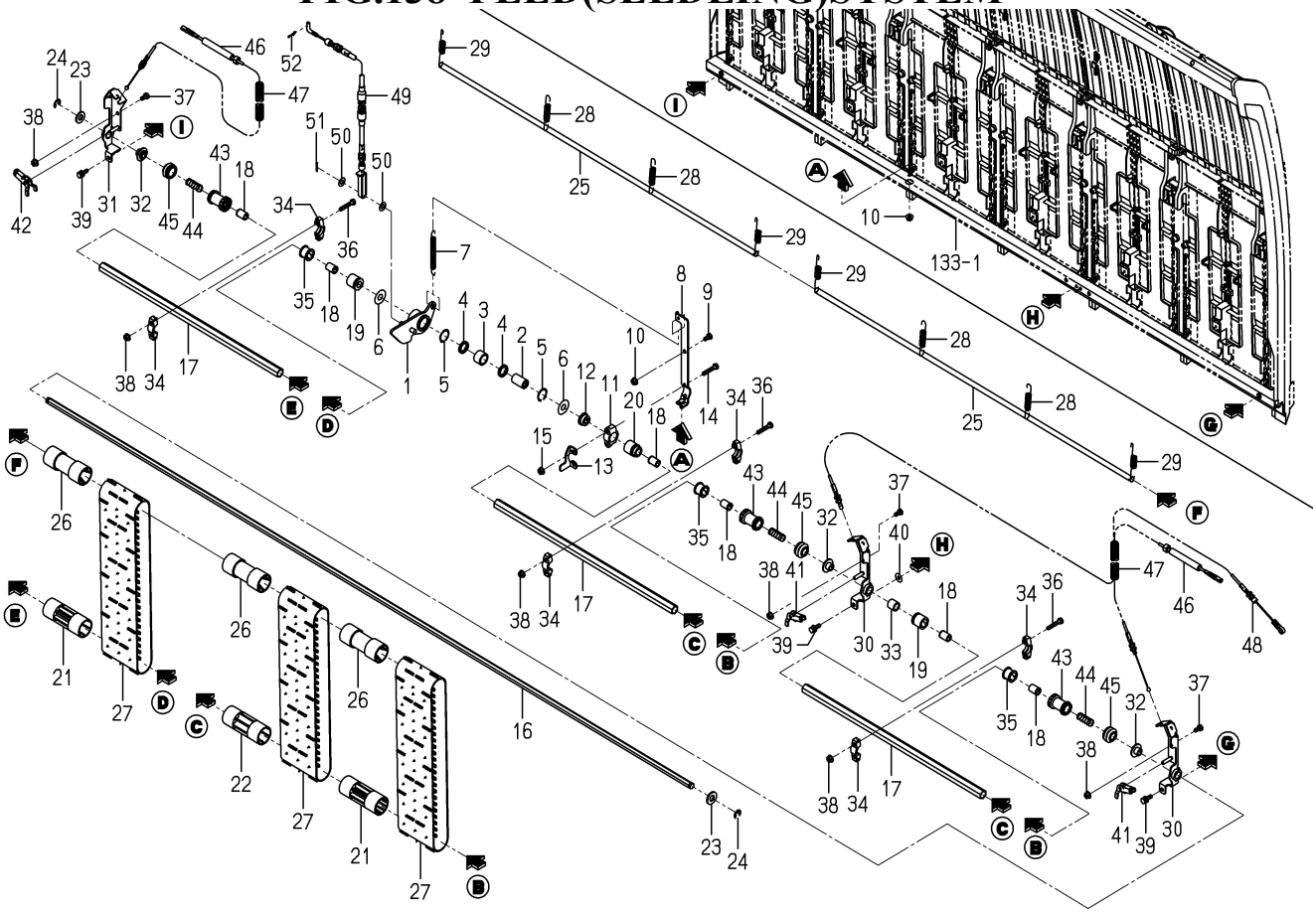

2232-805 -0100

KEY	PART CODE	DESCRIPTION	SPC	TYPE OF MODEL NP60E16		ITC	COL	GRP	REMARKS
1	2232-805-200-10	ARM/SEEDLINGFEED	*	1					
2	2232-805-013-20	SHAFT/ROLLER CLUTCH/	*	1					
3	2232-805-021-00	ROLLERCLUTCH/HF1816	*	1					
4	2232-805-022-10	OILSEAL/SDO18243.5/T	*	2					
5	2232-805-029-00	RING/SNAP	*	2					
6	2232-805-028-00	WASHER/12X30X01	*	2					
7	2232-805-011-10	SPRING/HE104	*	1					
8	2232-805-210-00	HOLDER/SPRING COMP	*	1					
9	V200-260-601-20	BOLT/M 6X12	*	1					
10	V360-260-006-00	NUT/M6	*	2					
11	2232-805-008-00	HOLDER/SEEDLING FEED	*	1					
12	2232-805-006-00	BUSH/SEEDLINGFEED/20	*	1					
13	2232-805-020-00	STOPPER/SEEDLING FEE	*	1					
14	V200-260-603-50	BOLT/M 6X35	*	2					
15	V360-260-006-00	NUT/M6	*	2					
16	2232-805-001-00	SHAFT/SEEDLINGFEED/6	*	1					
17	2232-805-002-00	SHAFT/SEEDLINGFEED/2	*	3					
18	2186-805-003-00	BUSH,SEEDLING	*	6					
19	2204-805-005-10	BUSH/SEEDLING FEED/C	*	2					
20	2186-805-005-00	BUSH,SEEDING OUT	*	1					
21	2232-805-003-00	ROLLER/SEEDLINNG	*	3					
22	2186-805-004-20	ROLLER/SEEDLING	*	9					
23	V411-260-012-00	WASHER /M12	*	2					
24	8842-515-022-00	RING, SNAP	*	2					
25	2204-805-008-00	SHAFT	*	2					
26	2161-835-019-00	ROLLER,SEEDLING,UPPE	*	12					
27	2204-805-025-00	BELT/PLANT/PZ	*	12					
28	2161-835-021-00	SPRING,BELT/8	*	4					
29	2161-835-022-00	SPRING,BELT/4	*	4					
30	2232-805-220-20	PLATE/CLUTCH/LH COMP	*	2					

FIG.138 FEED(SEEDLING)SYSTEM

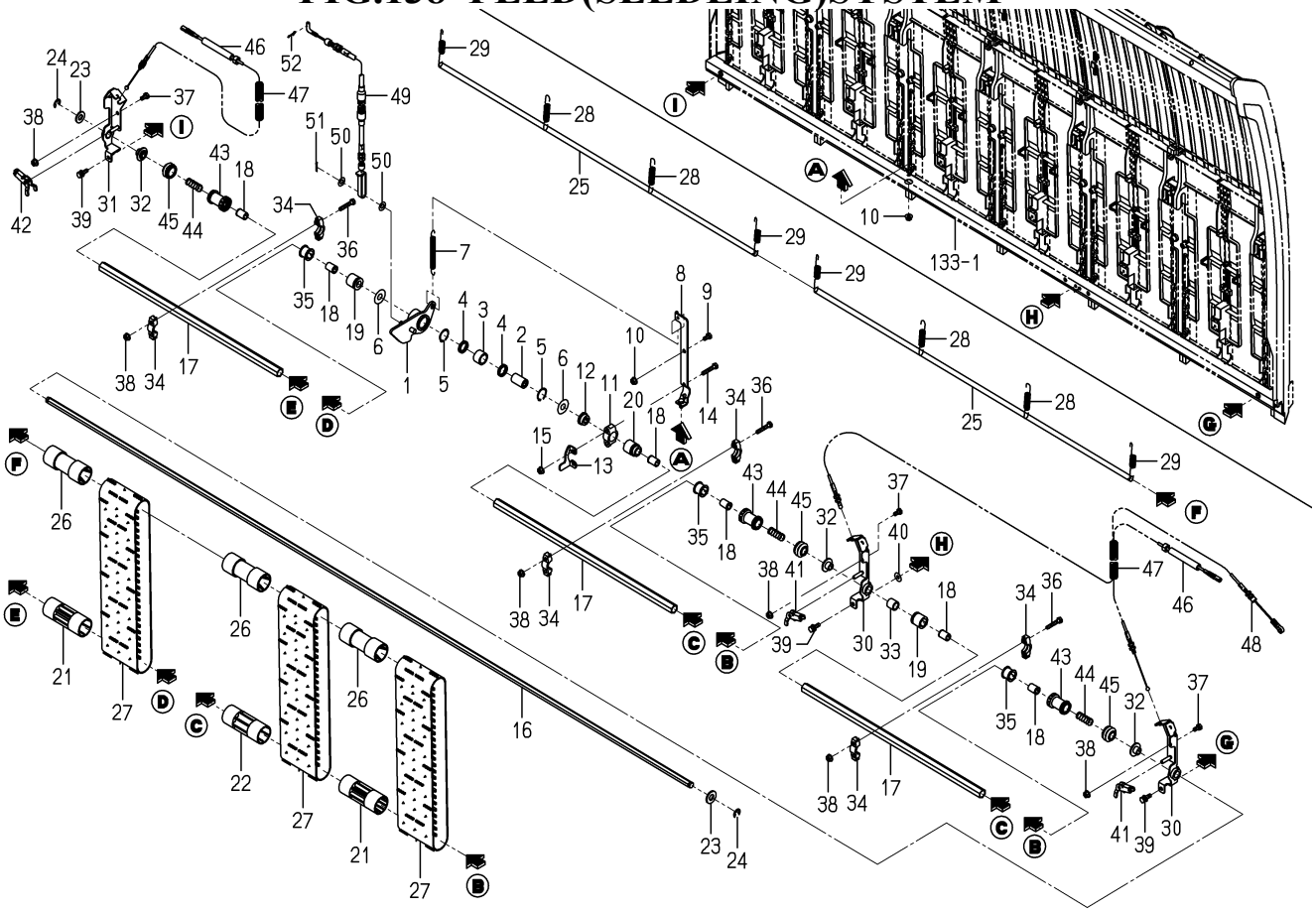

2232-805 -0100

KEY	PART CODE	DESCRIPTION	SPC	TYPE OF MODEL NP60E16		ITC	COL	GRP	REMARKS
31	2232-805-230-20	PLATE/CLUTCH/RH COMP	*	1					
32	2232-805-024-00	BUSH/HOLDER/CLUTCH/N	*	3					
33	2232-805-010-10	COLLAR/13X18X17	*	1					
34	2186-805-008-00	HOLDER,SEEDLONG,UPPE	*	6					
35	2186-805-011-00	BUSH,SEEDLING	*	3					
36	V200-260-603-50	BOLT/M 6X35	*	6					
37	V200-260-601-20	BOLT/M 6X12	*	6					
38	V360-260-006-00	NUT/M6	*	12					
39	V210-360-602-00	BOLT/SP	*	3					
40	3560-503-302-00	WASHER,WIRE TENSION	*	1					
41	2232-805-005-10	ARM/CLUTCH/SEEDLING	*	2					
42	2232-805-025-10	ARM/CLUTCH/SEEDLING	*	1					
43	2232-805-004-00	CLUTCH/SEEDLING FEED	*	3					
44	2232-805-007-00	SPRING/HC034	*	3					
45	2232-805-023-00	BOOT/SEEDLING FEED C	*	3					
46	2232-805-051-10	CABLE/SEEDLING FEED	*	2					
47	2232-805-056-00	CORRUGATED TUBE/10X6	*	2					
48	2232-805-057-20	CABLE/SEEDLING FEED	*	1					
49	2232-805-014-20	CABLE/SEEDLING FEED	*	1					
50	V411-260-008-00	WASHER,PL/M 8	*	2					
51	V500-162-501-50	PIN,SPLIT/2.5X15	*	1					
52	2161-735-005-00	PIN	*	1					

FIG.139 EXTENSION(TANK/SEEDLING)SYSTEM

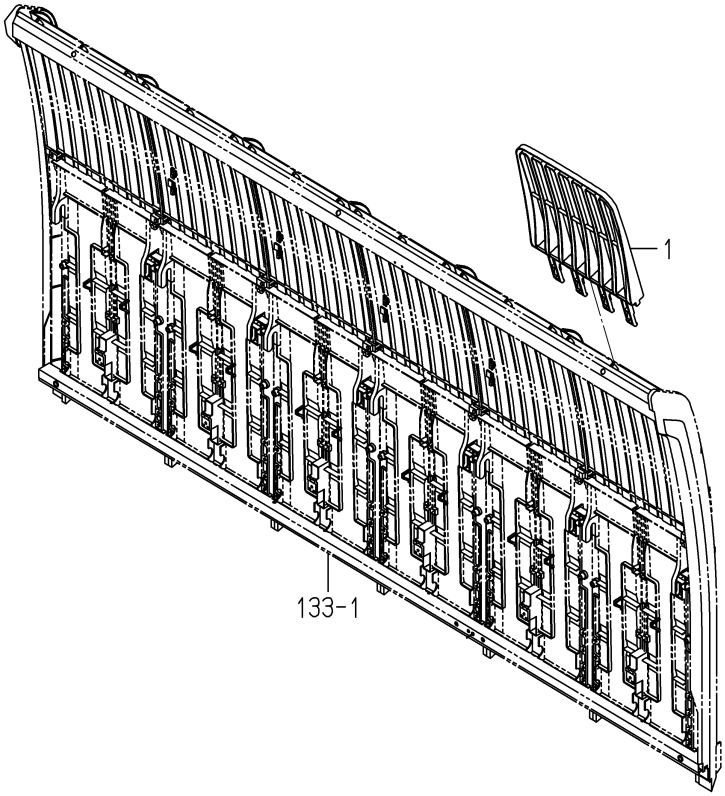

2232-806 -0100

KEY	PART CODE	DESCRIPTION	SPC	TYPE OF MODEL NP60E16		ITC	COL	GRP	REMARKS
1	2232-806-001-10	SEEDLINGTANK/EXTEND	*	6					

FIG.140 SENSOR (STOPPER/TANK/SEEEDLING)SYSTEM

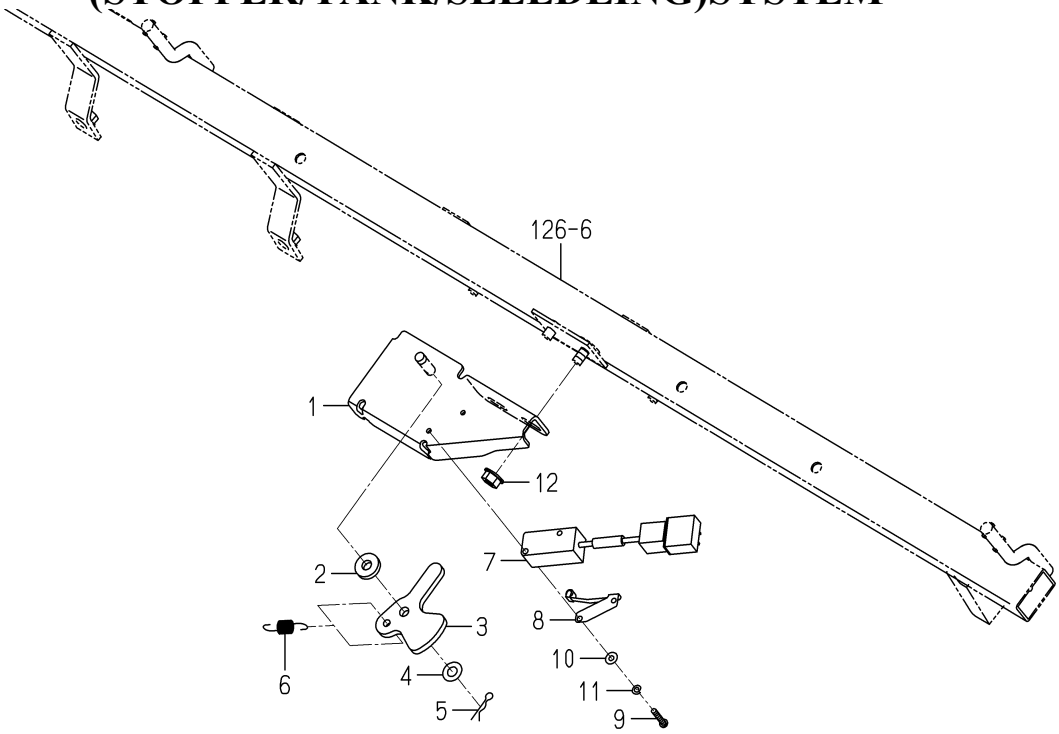

2232-807 -0100

KEY	PART CODE	DESCRIPTION	SPC	TYPE OF MODEL NP60E16		ITC	COL	GRP	REMARKS
1	2232-807-200-00	STAY/STOPSWITCH COMP	*	1					
2	2209-801-203-00	WASHER/07X16X03	*	1					
3	2232-807-001-00	CAM/STOPSWITCH	*	1					
4	V411-260-006-00	WASHER / M6	*	1					
5	2130-601-018-00	PIN,SNAP/6	*	1					
6	2232-807-002-00	SPRING/STOPSWITCH	*	1					
7	3807-836-350-00	SWITCH ASSY	*	1					
8	3807-836-400-00	ACTUATOR ASSY	*	1					
9	V111-163-001-60	SCREW/M3X16	*	2					
10	V411-260-003-00	WASHER/M3	*	2					
11	V401-160-003-00	WASHER,SP/M 3	*	2					
12	V360-260-006-00	NUT/M6	*	1					

FIG.141 LABEL(CAUTION)(D TYPE)

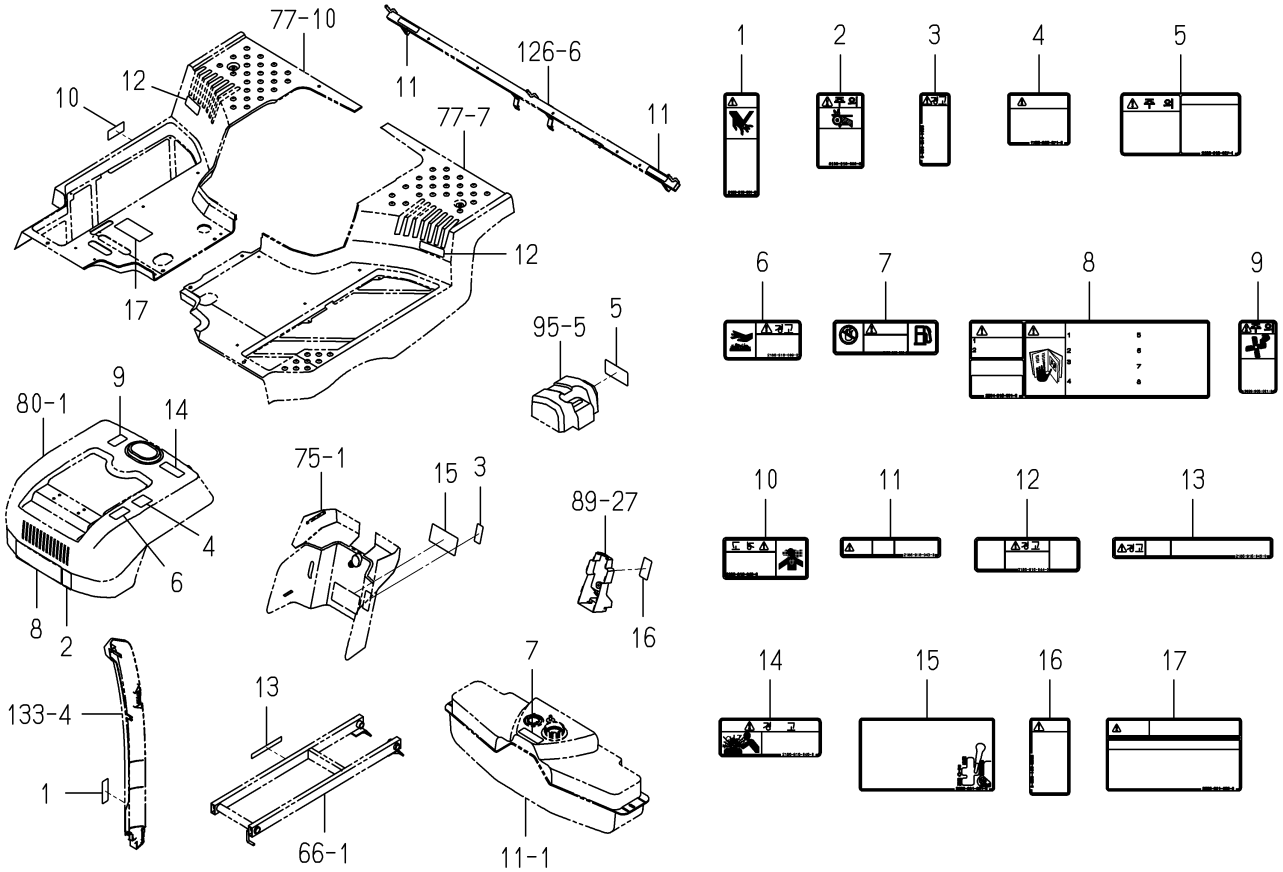

2232-901D-0100

KEY	PART CODE	DESCRIPTION	SPC	TYPE OF MODEL NP60E16		ITC	COL	GRP	REMARKS
1	2186-916-001-20	LABEL/CAUTION/CHECK/	*	1					
2	2186-916-002-20	LABEL/CAUTION/BELT/	*	1					
3	2204-916-002-00	LABEL/WARNING/PEDAL/	*	1					
4	1756-905-071-00	LABEL/CAUTION/COVER/	*	1					
5	2186-916-007-10	LABEL/CAUTION/BATTER	*	1					
6	2186-916-009-20	LABEL/WARNING/MUFFLE	*	1					
7	2186-916-010-30	LABEL/CAUTION	*	1					
8	2204-916-001-00	LABEL/CAUTION/DRIVE/	*	1					
9	3829-905-001-00	LABEL/CAUTION/FAN/K	*	1					
10	2186-916-042-00	LABEL/WARNING/GAS/K	*	1					
11	2186-916-043-00	LABEL/CAUTION/MARKER	*	2					
12	2186-916-044-00	LABEL/WARNING	*	2					
13	2186-916-045-00	LABEL/WARNING/SHAFT	*	1					
14	2186-916-046-00	LABEL/WARNING/RADIAT	*	1					
15	2232-901-031-00	LABEL/CAUTION/JUST/P	*	1					
16	2232-901-032-00	LABEL/WARNING/JUST/P	*	1					
17	2232-901-033-00	LABEL/WARNING/PLANT	*	1					

FIG.142 LABEL(CAUTION)(G TYPE)

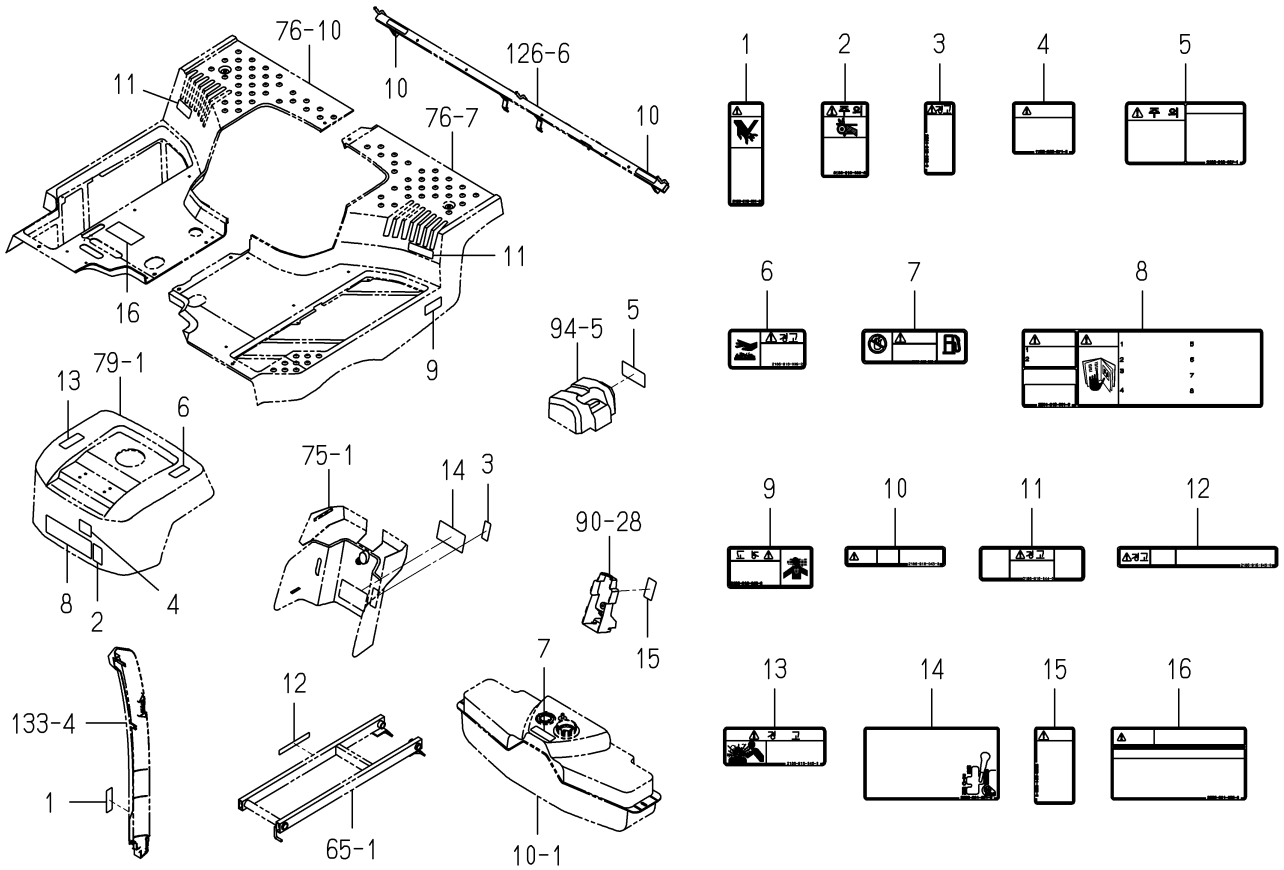

2232-901E-0100

KEY	PART CODE	DESCRIPTION	SPC	TYPE OF MODEL NP60E16		ITC	COL	GRP	REMARKS
1	2186-916-001-20	LABEL/CAUTION/CHECK/	*	1					
2	2186-916-002-20	LABEL/CAUTION/BELT/	*	1					
3	2204-916-002-00	LABEL/WARNING/PEDAL/	*	1					
4	1756-905-071-00	LABEL/CAUTION/COVER/	*	1					
5	2186-916-007-10	LABEL/CAUTION/BATTER	*	1					
6	2186-916-009-20	LABEL/WARNING/MUFFLE	*	1					
7	2186-916-010-30	LABEL/CAUTION	*	1					
8	2204-916-001-00	LABEL/CAUTION/DRIVE/	*	1					
9	2186-916-042-00	LABEL/WARNING/GAS/K	*	1					
10	2186-916-043-00	LABEL/CAUTION/MARKER	*	2					
11	2186-916-044-00	LABEL/WARNING	*	2					
12	2186-916-045-00	LABEL/WARNING/SHAFT	*	1					
13	2186-916-046-00	LABEL/WARNING/RADIAT	*	1					
14	2232-901-031-00	LABEL/CAUTION/JUST/P	*	1					
15	2232-901-032-00	LABEL/WARNING/JUST/P	*	1					
16	2232-901-033-00	LABEL/WARNING/PLANT	*	1					

FIG.143 ORNAMENT&LABEL(G TYPE)

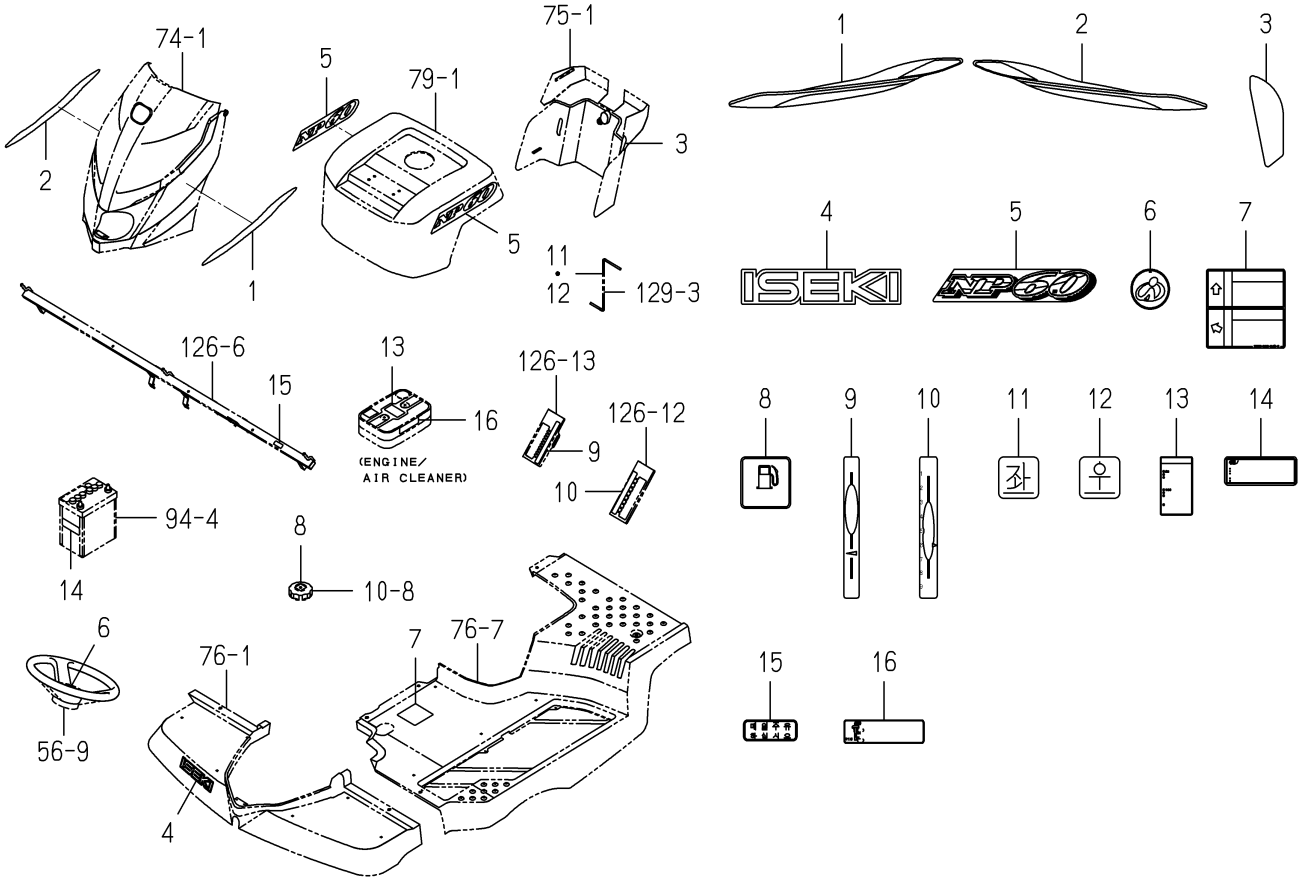

2232-912J-0100

KEY	PART CODE	DESCRIPTION	SPC	TYPE OF MODEL NP60E16		ITC	COL	GRP	REMARKS
1	2232-912-003-00	MOLDING/HOOD/LH	*	1					
2	2232-912-004-00	MOLDING/HOOD/RH	*	1					
3	2232-912-027-00	LABEL/HOOD/REAR	*	1					
4	1716-901-016-00	ORNAMENT/ISEKI	*	1					
5	2232-912-006-00	ORNAMENT/NP60	*	2					
6	2232-912-021-00	ORNAMENT/STEERING	*	1					
7	2232-912-046-00	LABEL/OILING/NP/E16	*	1					
8	2213-916-008-00	LABEL/GASOLINE/K	*	1					
9	2232-912-047-00	LABEL/SEEDLING PICKI	*	1					
10	2232-912-048-00	LABEL/DEPTH/E16	*	1					
11	2190-916-007-00	LABEL/LEFT/E16	*	1					
12	2190-916-008-00	LABEL/RIGHT/E16	*	1					
13	2186-916-032-20	LABEL/MANUAL/CLEANER	*	1					
14	2186-916-035-10	LABEL/BATTERY/K	*	1					
15	2186-916-019-10	LABEL/OIL/K	*	1					
16	2213-916-060-00	LABEL/OIL LEVEL/FD/E	*	1					

FIG.144 ORNAMENT&LABEL(D TYPE)

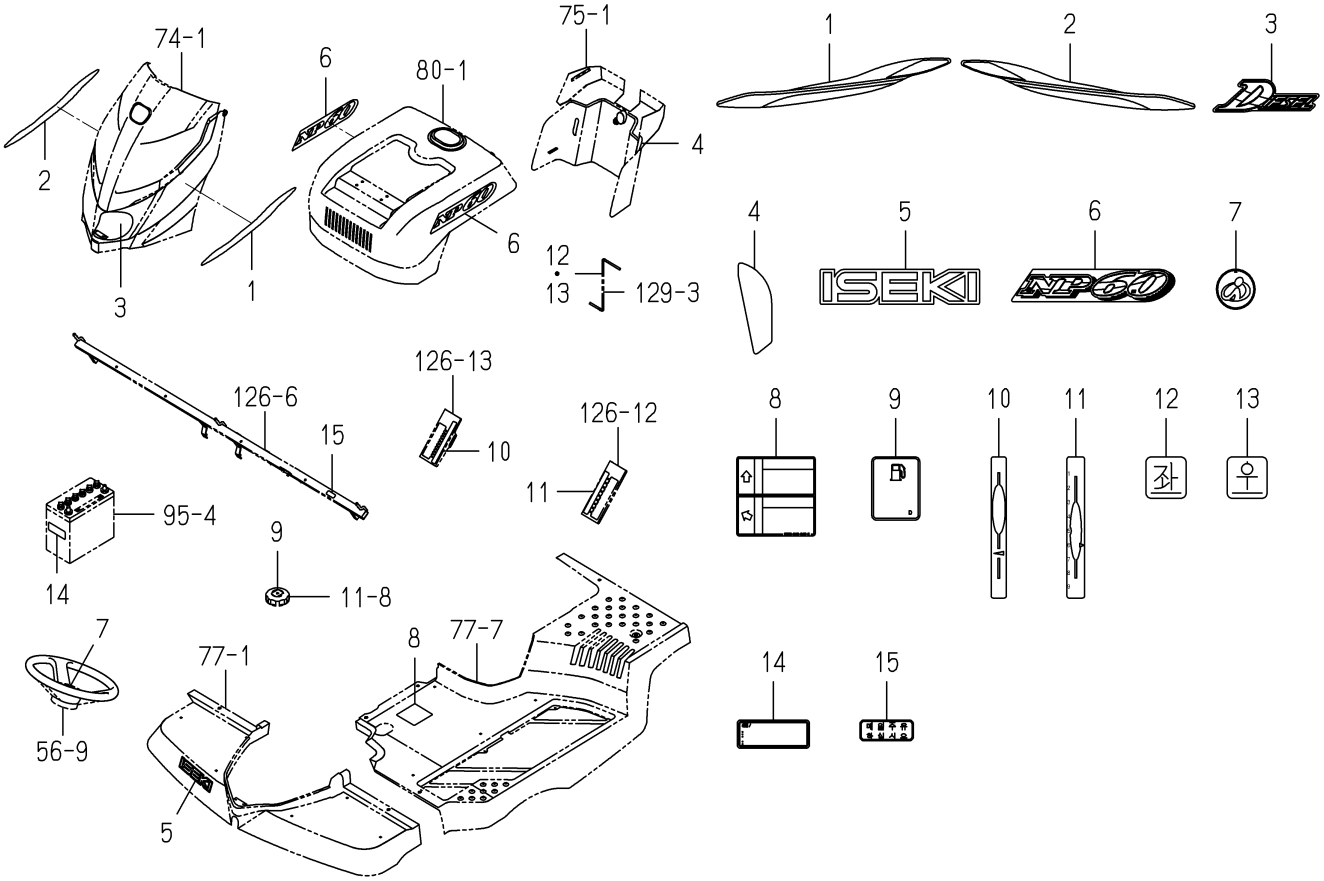

2232-912K-0100

KEY	PART CODE	DESCRIPTION	SPC	TYPE OF MODEL NP60E16		ITC	COL	GRP	REMARKS
1	2232-912-003-00	MOLDING/HOOD/LH	*	1					
2	2232-912-004-00	MOLDING/HOOD/RH	*	1					
3	2233-912-002-00	ORNAMENT/DIESEL	*	1					
4	2232-912-027-00	LABEL/HOOD/REAR	*	1					
5	1716-901-016-00	ORNAMENT/ISEKI	*	1					
6	2232-912-006-00	ORNAMENT/NP60	*	2					
7	2232-912-021-00	ORNAMENT/STEERING	*	1					
8	2232-912-046-00	LABEL/OILING/NP/E16	*	1					
9	2213-916-005-00	LABEL/DIESELFUEL/K	*	1					
10	2232-912-047-00	LABEL/SEEDLING PICKI	*	1					
11	2232-912-048-00	LABEL/DEPTH/E16	*	1					
12	2190-916-007-00	LABEL/LEFT/E16	*	1					
13	2190-916-008-00	LABEL/RIGHT/E16	*	1					
14	2186-916-035-10	LABEL/BATTERY/K	*	1					
15	2186-916-019-10	LABEL/OIL/K	*	1					

FIG.145 LABEL(PLANTING INTERVAL)

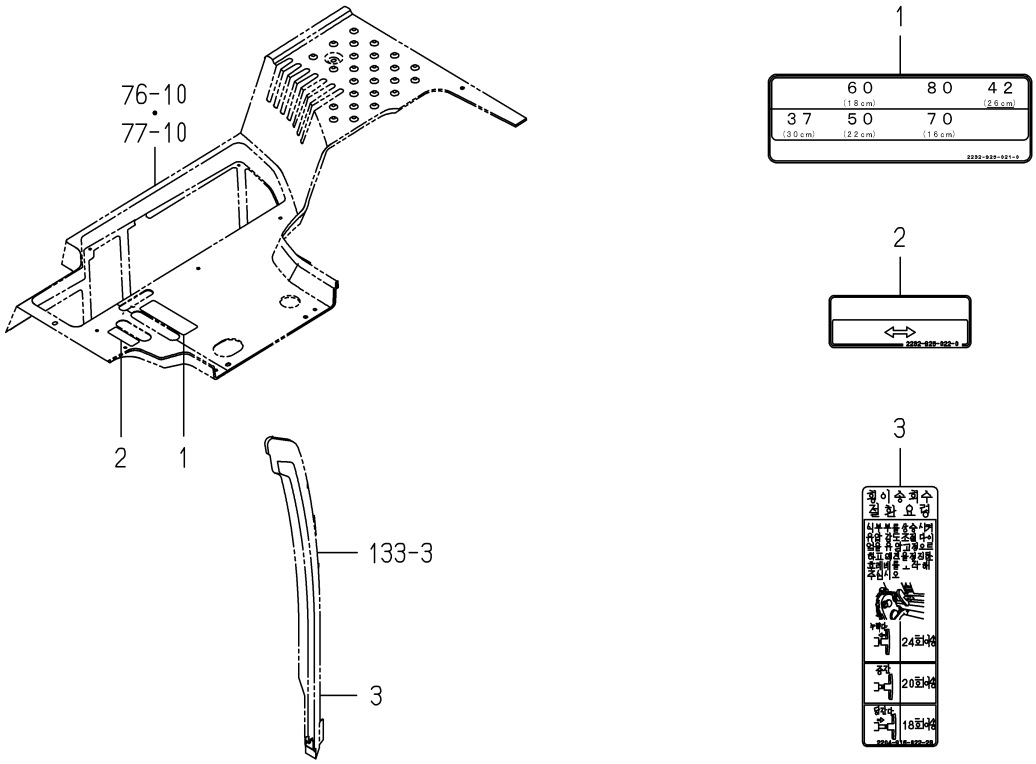

2232-925G-0100

KEY	PART CODE	DESCRIPTION	SPC	TYPE OF MODEL NP60E16		ITC	COL	GRP	REMARKS
1	2232-925-021-00	LABEL/PLANT INTERVAL	*	1					
2	2232-925-022-00	LABEL/PLANT INTERVAL	*	1					
3	2204-916-022-20	LABEL/SLIDER/LEVER/K	*	1					

FIG.146 LABEL(FERTILIZER)

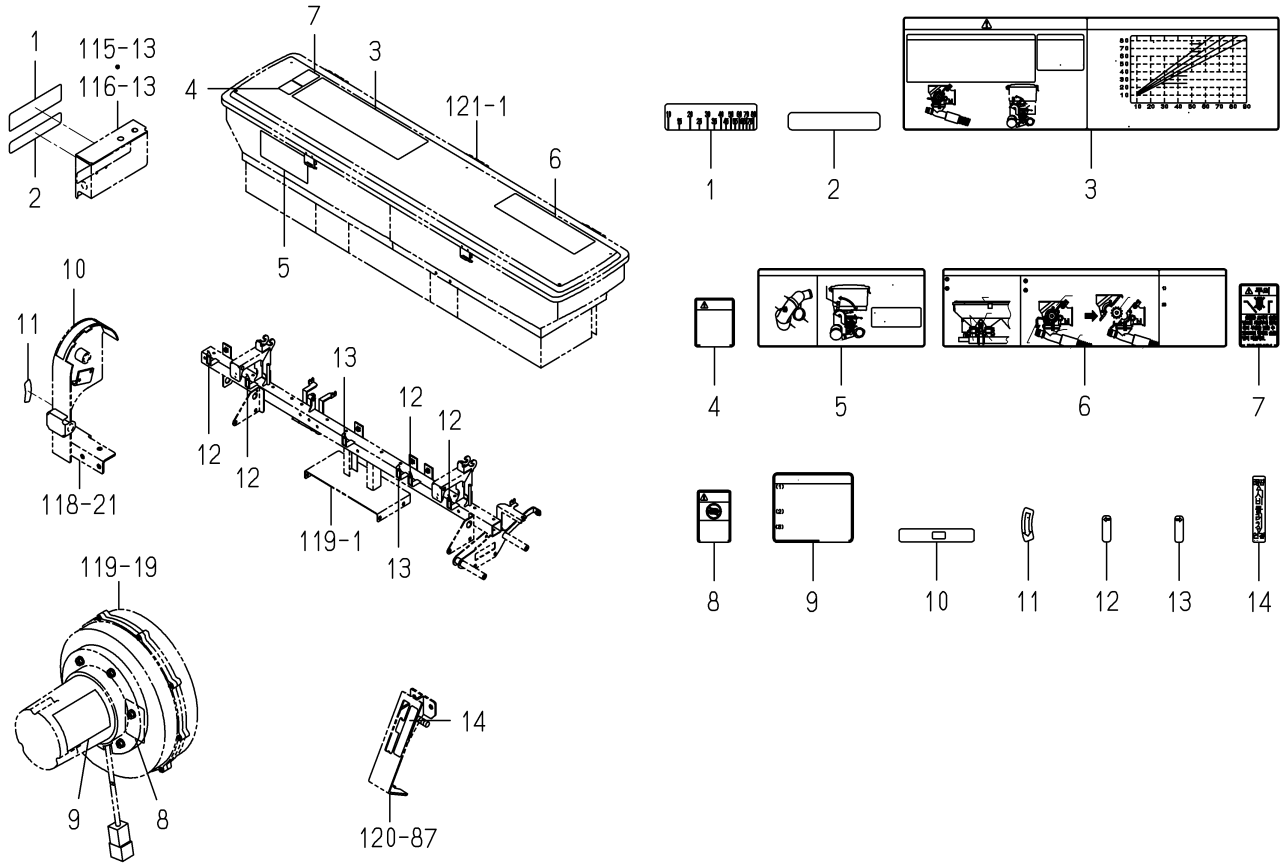

2232-926D-0100

KEY	PART CODE	DESCRIPTION	SPC	TYPE OF MODEL NP60E16		ITC	COL	GRP	REMARKS
1	2232-926-051-00	LABEL/FERTILIZER/NP/	*	1					
2	2232-926-009-00	LABEL/A MOUNT OF FER	*	1					
3	2232-926-052-00	LABEL/CAUTION/FERTIL	*	1					
4	2232-926-053-00	LABEL/CAUTION/HOPPER	*	1					
5	2232-926-054-00	LABEL/DISCHARGE OPER	*	1					
6	2232-926-055-00	LABEL/CLEANING/CAPSU	*	1					
7	8842-905-042-00	LABEL/CAUTION/HOPPER	*	1					
8	3829-905-052-00	LABEL/CAUTION/HAND	*	1					
9	2232-926-056-00	LABEL/CAUTION/BLOWER	*	1					
10	2232-926-057-00	LABEL/DISCHARGE LEVE	*	1					
11	2232-926-011-00	LABEL/HANDLE	*	1					
12	2232-926-058-00	LABEL/CLUTCH/LH/E16	*	4					
13	2232-926-059-00	LABEL/CLUTCH/RH/E16	*	2					
14	8844-906-006-00	LABEL/TOTALCLUTCH/K	*	1					

FIG.147 ACCESSORIES(FERTILIZER)

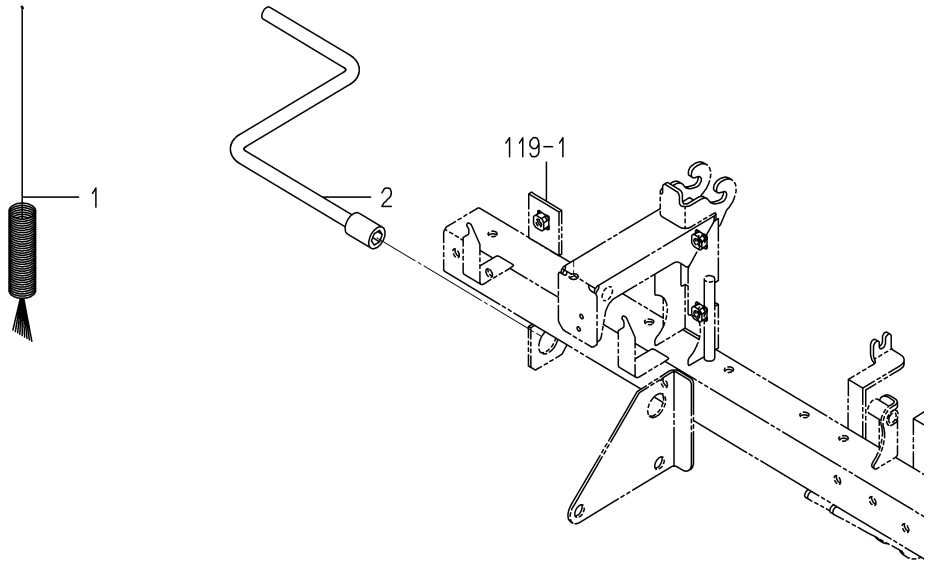

2232-955A-0100

KEY	PART CODE	DESCRIPTION	SPC	TYPE OF MODEL NP60E16		ITC	COL	GRP	REMARKS
1	8842-919-002-10	BRUSH	*	1					
2	2232-655-500-10	HANDLE/DELIVERY COMP	*	1					

FIG.148 ACCESSORIES(G TYPE)

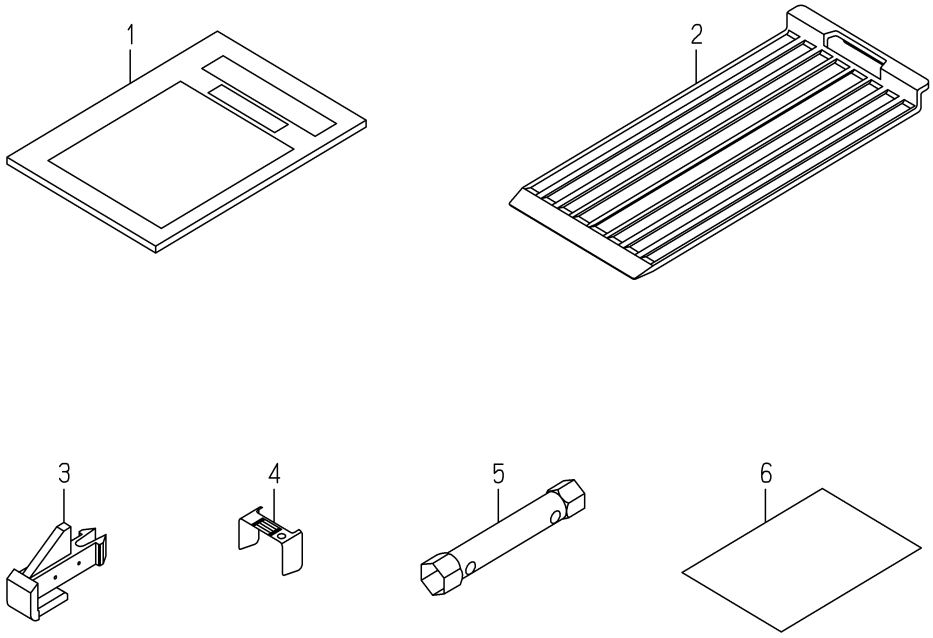

2232-971 -0100

KEY	PART CODE	DESCRIPTION	SPC	TYPE OF MODEL NP60E16		ITC	COL	GRP	REMARKS
1	2232-971-001-00	MANUAL/OPERATION/NP	*	1					
2	2161-971-004-00	PLATE, SEEDING	*	1					
3	2204-738-080-10	PIECE/FORK/PK	*	12					
4	2144-930-002-10	GAUGE	*	1					
5	2162-940-001-00	WRENCH,PLUG	*	1					
6	2232-971-004-10	ERRORCODE/NP	*	1					

FIG.149 ACCESSORIES(D TYPE)

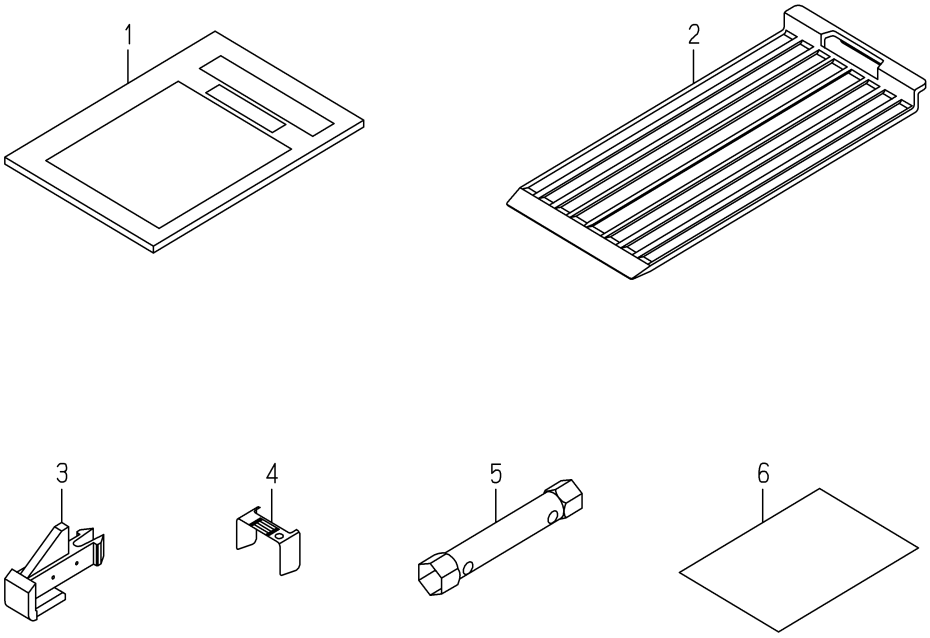

2232-971D-0100

KEY	PART CODE	DESCRIPTION	SPC	TYPE OF MODEL NP60E16		ITC	COL	GRP	REMARKS
1	2233-971-001-00	MANUAL/OPERATION/NP8	*	1					
2	2161-971-004-00	PLATE, SEEDING	*	1					
3	2204-738-080-10	PIECE/FORK/PK	*	12					
4	2144-930-002-10	GAUGE	*	1					
5	2162-940-001-00	WRENCH,PLUG	*	1					
6	2232-971-004-10	ERRORCODE/NP	*	1					

FIG.150 COMPONENT PARTS FOR K510-021-000-20 ON Fig.15

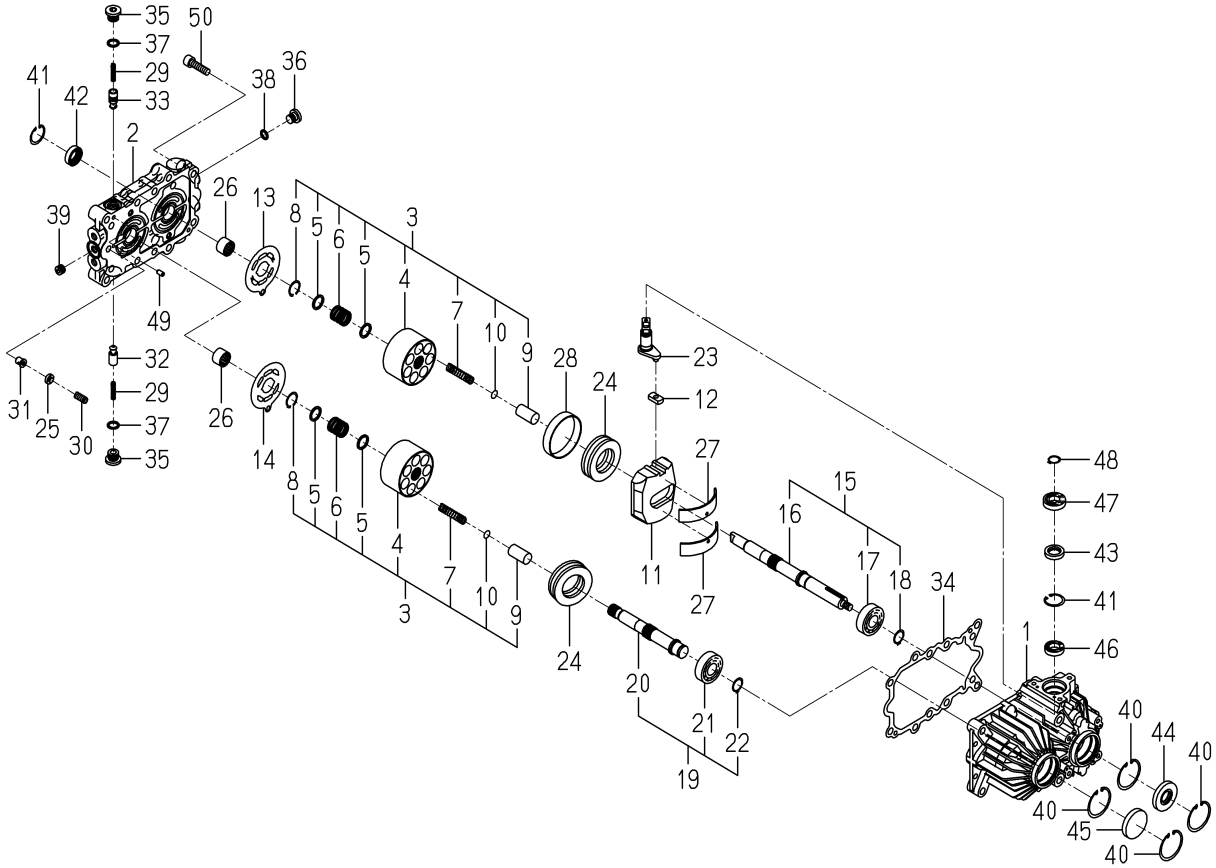

K510-021-000-2F

KEY	PART CODE	DESCRIPTION	SPC	TYPE OF MODEL NP60E16		ITC	COL	GRP	REMARKS
1	K510-017-001-00	CASE/HMS1/017	*	1					
2	K510-021-004-00	BLOCK/PORT/HMS1/021	*	1					
3	K510-021-300-00	BLOCK/CYLINDER/HMS1	*	2					
4	K510-021-301-00	BLOCK/CYLINDER/24CC	*	2					
5	K510-021-302-00	WASHER/19X24X2	*	4					
6	K510-021-303-00	SPRING/HC024	*	2					
7	K510-021-304-00	SPRING/HC051	*	14					
8	K510-021-305-00	RING/SNAP	*	2					
9	K510-021-306-00	PISTON/HMS1/021	*	14					
10	K510-021-307-00	SHIM/1.0	*	14					
11	K510-021-006-00	PLATE/SWASH/HMS1/021	*	1					
12	K510-001-007-00	METAL/SLIDE	*	1					
13	K510-021-010-00	PLATE/VALVE/PUMP	*	1					
14	K510-021-011-00	PLATE/VALVE/MOTOR	*	1					
15	K510-021-600-00	SHAFT/PUMP/021 SET	*	1					
16	K510-021-012-00	SHAFT/PUMP/HMS1/021	*	1					
17	V600-110-620-40	BEARING,RB/6204	*	1					
18	V704-140-020-00	RING,SNAP/20 C	*	1					
19	K510-021-610-00	SHAFT/MOTOR/021 SET	*	1					
20	K510-021-013-00	SHAFT/MOTOR/HMS1/021	*	1					
21	V600-110-620-40	BEARING,RB/6204	*	1					
22	V704-140-020-00	RING,SNAP/20 C	*	1					
23	K510-006-014-00	ARM/TRUNNION/HMS1/00	*	1					
24	K510-006-015-00	BEARING/THRUST	*	2					
25	K510-003-037-00	PLATE/SPRING	*	1					
26	K510-021-016-10	BEARING	*	2					
27	K510-001-017-00	BUSH/95X100X22	*	2					
28	K510-001-018-00	BUSH/68X71X14	*	1					
29	K510-001-020-00	SPRING/HC030	*	2					
30	K510-003-021-00	SPRING/HC021	*	1					

FIG.150 COMPONENT PARTS FOR K510-021-000-20 ON Fig.15

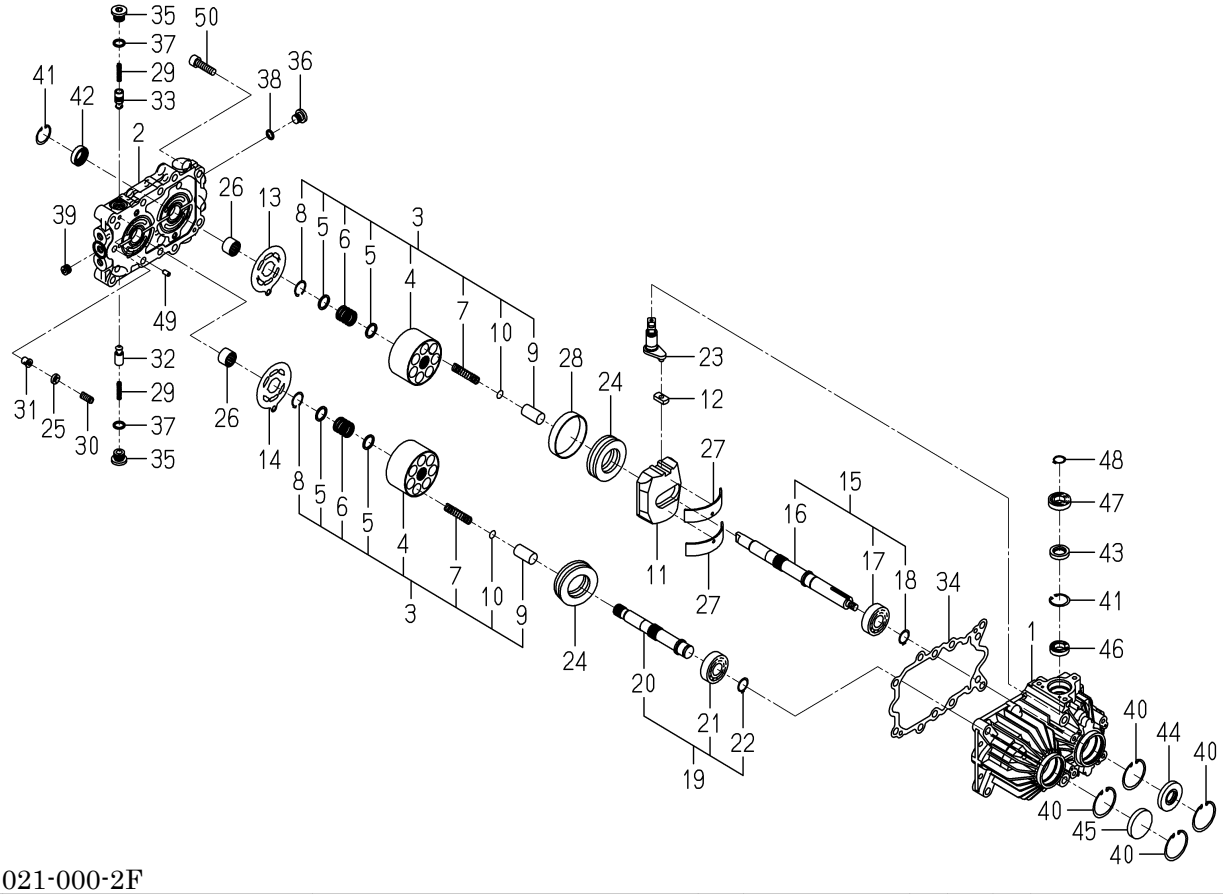

K510-021-000-2F

KEY	PART CODE	DESCRIPTION	SPC	TYPE OF MODEL NP60E16		ITC	COL	GRP	REMARKS
31	K510-003-022-00	POPPET/RELIEF	*	1					
32	K510-021-023-00	POPPET/CHECK	*	1					
33	K510-021-024-00	POPPET/CHECK/1.6	*	1					
34	K510-001-026-00	GASKET	*	1					
35	K510-001-029-00	PLUG(G3/8)	*	2					
36	K275-001-003-00	PLUG(PF1/4)	*	2					
37	V720-112-401-40	O-RING/P14	*	2					
38	V720-112-401-10	O-RING/P11	*	2					
39	V780-140-000-4T	PLUG/SCREW/SEAL	*	3					
40	V705-140-047-00	RING,SNAP/47 C	*	4					
41	V705-140-030-00	RING,SNAP/30 C	*	3					
42	K510-021-030-00	SEAL/OIL	*	2					
43	K510-001-031-00	SEAL/OIL	*	1					
44	V744-120-470-70	SEAL,OIL/TC20477	*	1					
45	1421-201-002-00	SEAL/47	*	1					
46	K510-017-047-00	BEARING/BALL	*	1					
47	K510-017-048-00	BEARING/BALL	*	1					
48	V704-140-017-00	RING,SNAP/17 C	*	1					
49	K510-001-036-00	PIN,ST	*	4					
50	V220-541-003-50	SCREW/SOCKET	*	8					

FIG.151 COMPONENT PARTS FOR K510-022-000-00 ON Fig.16

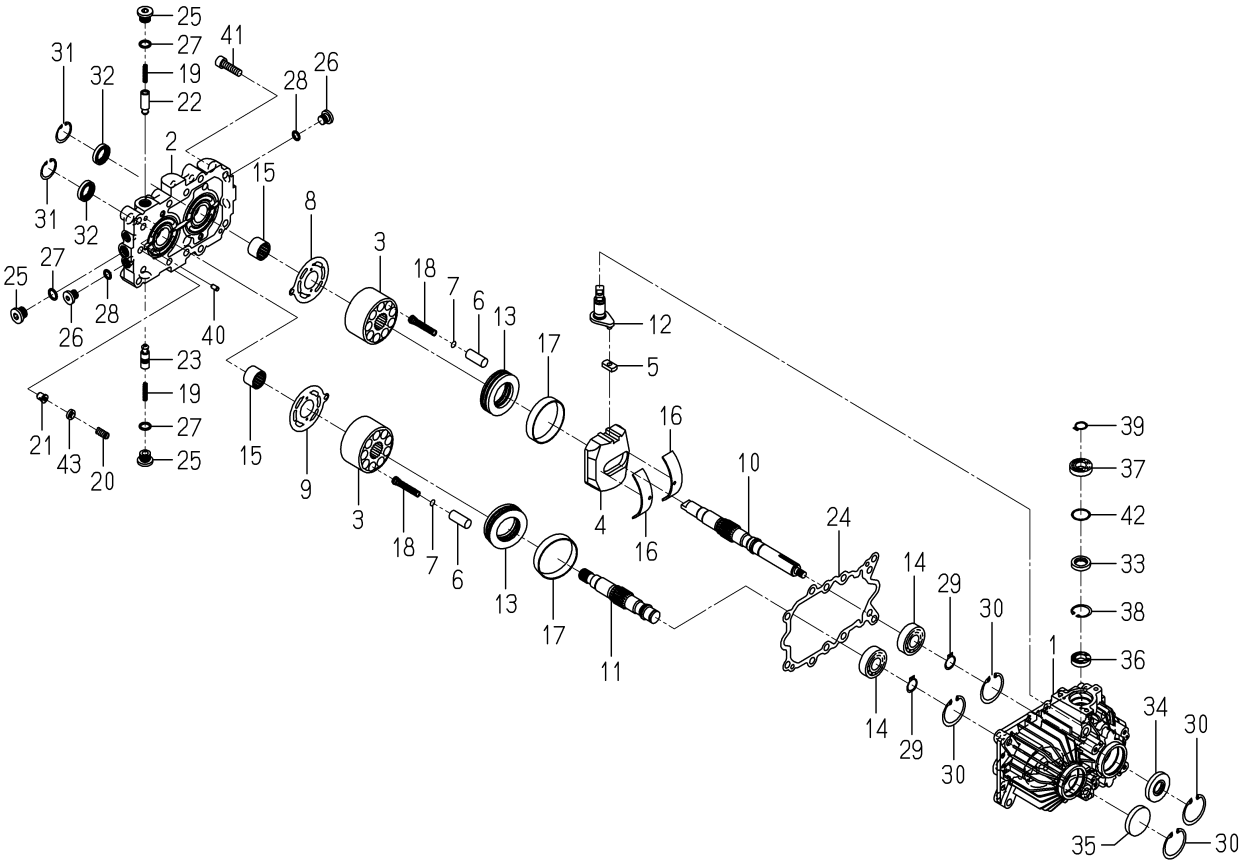

K510-022-000-0B

KEY	PART CODE	DESCRIPTION	SPC	TYPE OF MODEL NP60E16		ITC	COL	GRP	REMARKS
1	K510-022-001-00	CASE/HMS1/022	*	1					
2	K510-022-004-00	BLOCK/PORT/HMS1/022	*	1					
3	K510-019-005-10	BLOCK/CYLINDER/23CC	*	2					
4	K510-010-006-10	PLATE/SWASH	*	1					
5	K510-001-007-00	METAL/SLIDE	*	1					
6	K510-006-008-00	PISTON	*	18					
7	K510-010-009-00	SHIM/1.8	*	18					
8	K510-001-010-00	PLATE/VALVE/PUMP	*	1					
9	K510-001-011-00	PLATE/VALVE/MOTOR	*	1					
10	K510-006-012-30	SHAFT/PUMP	*	1					
11	K510-001-013-20	SHAFT/MOTOR	*	1					
12	K510-006-014-00	ARM/TRUNNION/HMS1/00	*	1					
13	K510-001-015-00	BEARING/THRUST	*	2					
14	V600-110-620-40	BEARING,RB/6204	*	2					
15	K510-001-016-00	NEEDLE	*	2					
16	K510-001-017-00	BUSH/95X100X22	*	2					
17	K510-001-018-00	BUSH/68X71X14	*	2					
18	K510-001-019-00	SPRING/HC053	*	18					
19	K510-001-020-00	SPRING/HC030	*	2					
20	K510-003-021-00	SPRING/HC021	*	1					
21	K510-003-022-00	POPPET/RELIEF	*	1					
22	K500-001-023-00	POPPET/CHECK	*	1					
23	K510-001-024-00	POPPET(CHECK/1.6)	*	1					
24	K510-001-026-00	GASKET	*	1					
25	K510-001-029-00	PLUG(G3/8)	*	3					
26	K275-001-003-00	PLUG(PF1/4)	*	4					
27	V720-112-401-40	O-RING/P14	*	3					
28	V720-112-401-10	O-RING/P11	*	4					
29	V704-140-020-00	RING,SNAP/20 C	*	2					
30	V705-140-047-00	RING,SNAP/47 C	*	4					

FIG.151 COMPONENT PARTS FOR K510-022-000-00 ON Fig.16

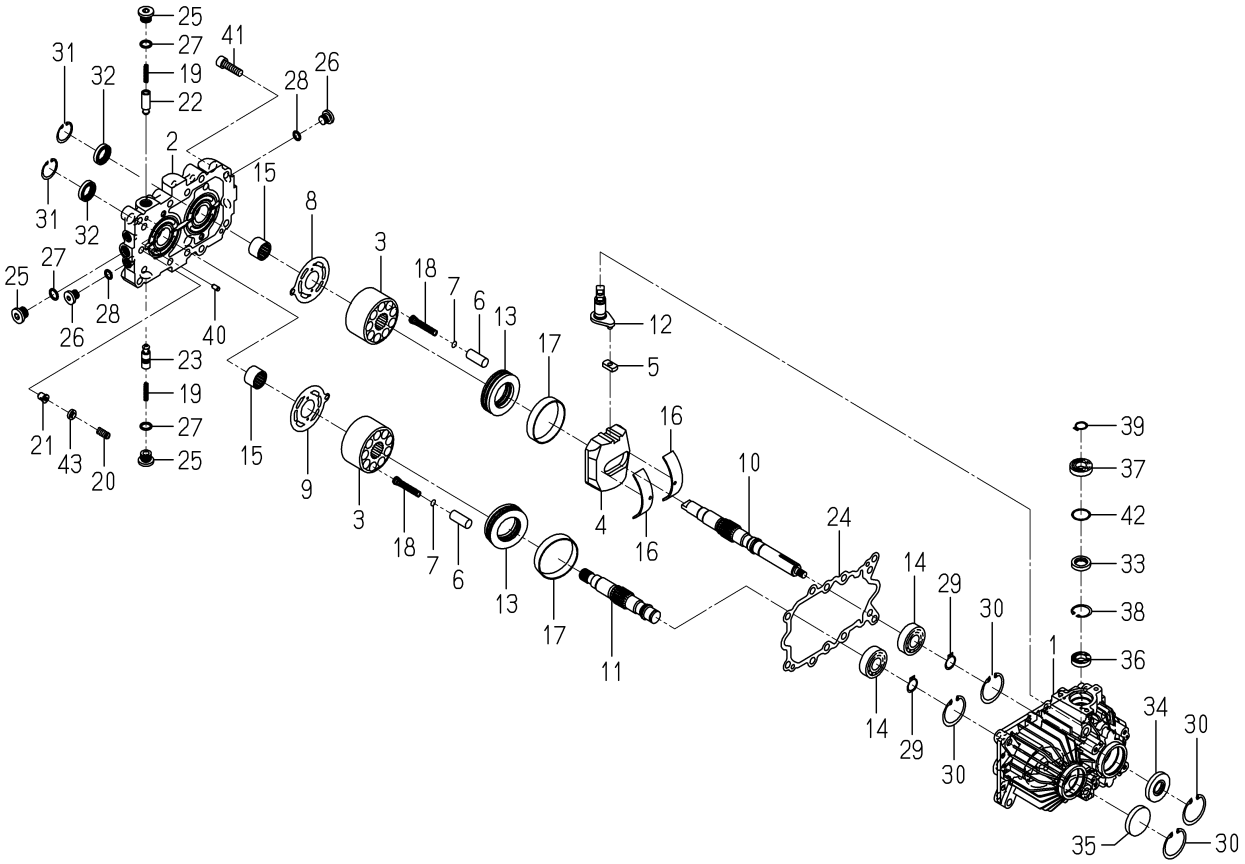

K510-022-000-0B

KEY	PART CODE	DESCRIPTION	SPC	TYPE OF MODEL NP60E16		ITC	COL	GRP	REMARKS
31	V705-140-032-00	RING,SNAP/32 C	*	2					
32	K510-001-039-00	OILSEAL	*	2					
33	K510-001-031-00	SEAL/OIL	*	1					
34	V744-120-470-70	SEAL,OIL/TC20477	*	1					
35	1421-201-002-00	SEAL/47	*	1					
36	K510-017-047-00	BEARING/BALL	*	1					
37	K510-017-048-00	BEARING/BALL	*	1					
38	V705-140-030-00	RING,SNAP/30 C	*	1					
39	V704-140-017-00	RING,SNAP/17 C	*	1					
40	K510-001-036-00	PIN,ST	*	4					
41	V220-541-003-50	SCREW/SOCKET	*	8					
42	K510-001-034-00	WASHER/25X30X1	*	1					
43	K510-003-037-00	PLATE/SPRING	*	1					

FIG.152 COMPONENT PARTS(1/2)
FOR 2204-738-440-40 ON Fig.131

20~30-PLEASE SEE 2/2 PAGE

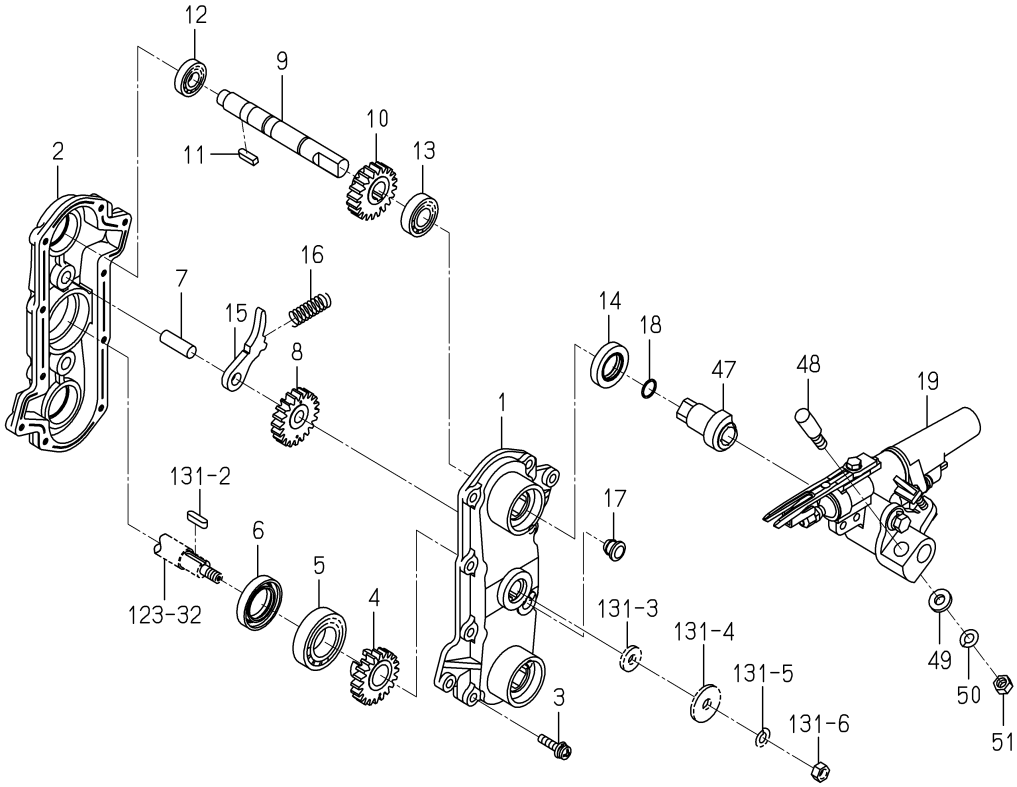

2204-738-440-4H

KEY	PART CODE	DESCRIPTION	SPC	TYPE OF MODEL NP60E16		ITC	COL	GRP	REMARKS
1	2204-738-340-10	CASE/ROTARY/OUT/LH	*	3					
2	2204-738-282-20	CASE/ROTARY/IN/LH	*	3					
3	V120-366-002-50	SOREN/SP/M6X25	*	30					
4	2204-738-273-00	GEAR,SUN/LH	*	3					
5	V600-110-600-50	BEARING,RB/6005	*	3					
6	2142-736-224-00	SEAL,OIL	*	3					
7	2142-736-214-00	PIN,COUNTER,GEAR	*	6					
8	2204-738-274-00	GEAR,COUNTER	*	6					
9	2204-738-275-20	SHAFT/PLANTING ARM/L	*	6					
10	2204-738-277-00	GEAR/LH	*	6					
11	2142-736-271-00	KEY,05X05X18 PLUS	*	6					
12	V600-110-620-10	BEARING,RB/6201	*	6					
13	V600-110-600-20	BEARING,RB/6002	*	6					
14	2144-738-216-00	SEAL,OIL	*	6					
15	2161-738-611-00	ARM LH	*	6					
16	2142-736-221-00	SPRING/HC037	*	6					
17	2186-738-038-20	CAP/10	*	3					
18	2161-738-008-00	O-RING/OR	*	12					
19	2204-738-450-00	PLANTINGARM/K/L ASSY	*	6					
20	2213-738-301-20	ARM,PLANTING/E/LH	*	6			4L		
21	2204-738-412-10	COVER/PLANTING/PZ/E	*	6					
22	2142-736-235-00	GASKET	*	6					
23	2204-738-304-20	BUSH/08X18X36	*	6					
24	V120-366-003-00	SCREW/SP	*	12					
25	2161-738-222-00	SEAL,OIL	*	6					
26	2204-738-240-20	FROK/PLANT COMP	*	6					
27	2204-738-004-00	LOCKNUT	*	6					
28	2232-738-304-00	PLANTINGSEAL	*	6					
29	2703-501-006-00	CUSHION	*	6					
30	2204-738-414-10	PUSHINGOUTNUT/E	*	6					

FIG.152 COMPONENT PARTS(2/2)
FOR 2204-738-440-40 ON Fig.131

47~51-PLEASE SEE 1/2 PAGE

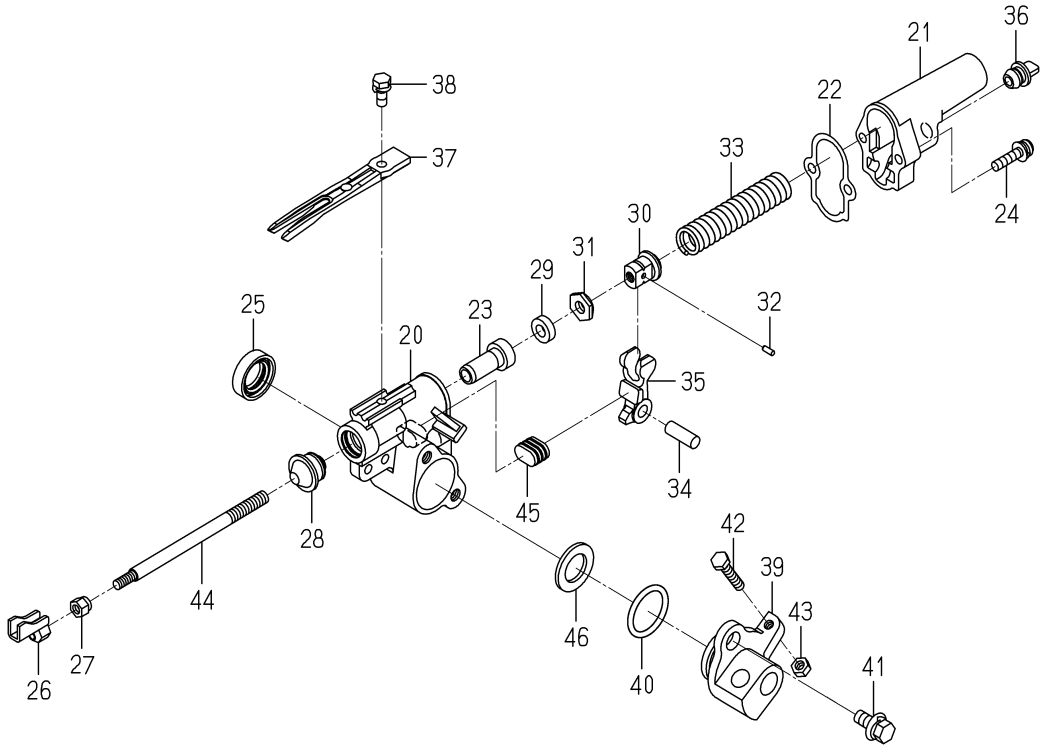

2204-738-440-4H

KEY	PART CODE	DESCRIPTION	SPC	TYPE OF MODEL NP60E16		ITC	COL	GRP	REMARKS
31	2703-501-008-00	NUT,LOCK PUSH OUT	*	6					
32	V523-100-300-80	PIN	*	6					
33	2204-738-413-10	SPRING/HC086	*	6					
34	2142-736-239-00	PIN,ARM PUSH-OUT	*	6					
35	2204-738-318-10	ARM/PUSH-OUT/PZ	*	6					
36	2204-738-001-00	CAP/YELLOW/10/KNOB	*	6					
37	2186-740-033-20	FINGER/14/G	*	6					
38	2204-738-059-00	BOLT/M6X16	*	6					
39	2204-738-312-00	HUB/PLANTING ARM	*	6			4L		
40	V720-103-502-80	O-RING/P28	*	6					
41	2186-738-059-00	BOLT/M8X20/SP/S	*	12					
42	V200-700-603-00	BOLT	*	6					
43	V301-700-006-00	NUT	*	6					
44	2204-738-005-00	SHAFT/FORK/PLANTING/	*	6					
45	2204-738-319-00	CUSHION/ARM/PZ	*	6					
46	2204-738-325-00	WASHER/M18	*	6					
47	2204-738-307-00	CAM/PUSHED OUT/LH	*	6					
48	2204-738-313-00	PIN/LOCKED	*	6					
49	2204-738-323-00	WASHER/09X18X03	*	6					
50	V401-700-008-00	WASHER/LOCK	*	6					
51	V304-700-008-00	NUT	*	6					

FIG.153 COMPONENT PARTS(1/2)
FOR 2204-739-440-40 ON Fig.132

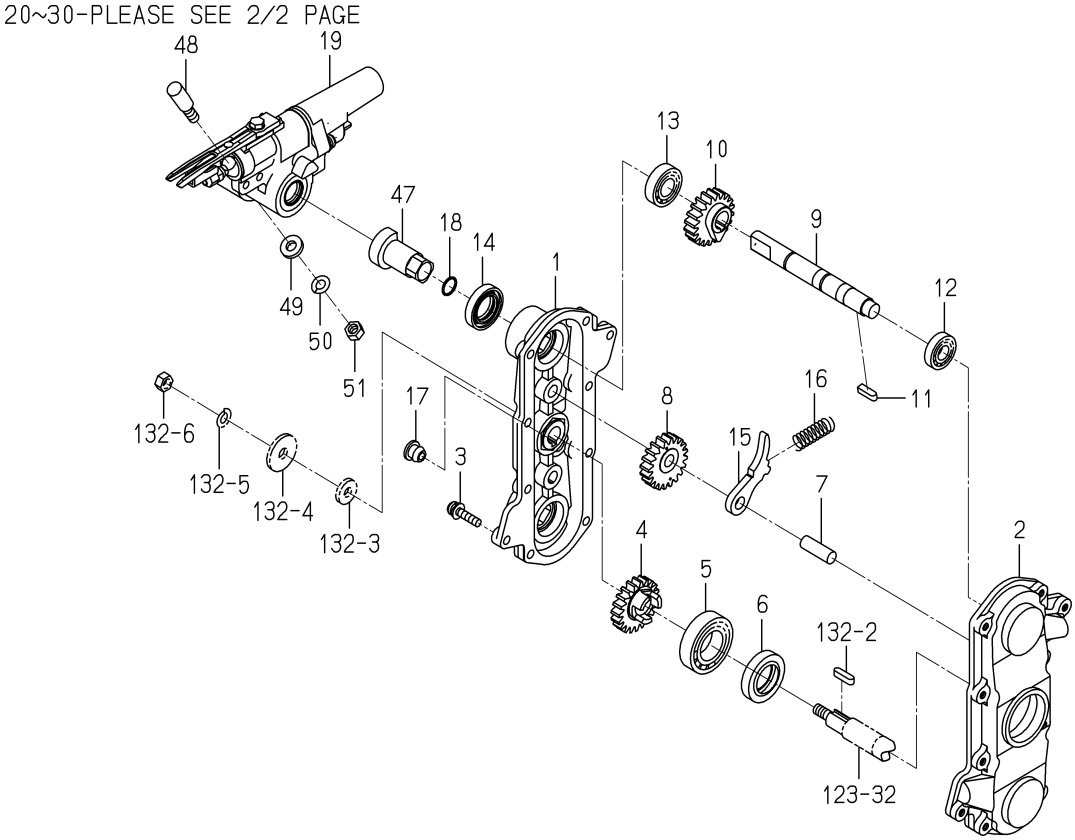

2204-739-440-4H

KEY	PART CODE	DESCRIPTION	SPC	TYPE OF MODEL NP60E16		ITC	COL	GRP	REMARKS
1	2204-739-340-10	CASE/ROTARY/OUT/RH	*	3					
2	2204-739-282-20	CASE/ROTARY/IN/RH	*	3					
3	V120-366-002-50	SOREN/SP/M6X25	*	30					
4	2204-739-273-00	GEAR/SUN/RH	*	3					
5	V600-110-600-50	BEARING,RB/6005	*	3					
6	2142-736-224-00	SEAL,OIL	*	3					
7	2142-736-214-00	PIN,COUNTER,GEAR	*	6					
8	2204-738-274-00	GEAR,COUNTER	*	6					
9	2204-739-275-20	SHAFT/PLANTING ARM/R	*	6					
10	2204-739-277-00	GEAR/RH	*	6					
11	2142-736-271-00	KEY,05X05X18 PLUS	*	6					
12	V600-110-620-10	BEARING,RB/6201	*	6					
13	V600-110-600-20	BEARING,RB/6002	*	6					
14	2144-738-216-00	SEAL,OIL	*	6					
15	2161-739-611-00	ARM LH	*	6					
16	2142-736-221-00	SPRING/HC037	*	6					
17	2186-738-038-20	CAP/10	*	3					
18	2161-738-008-00	O-RING/OR	*	12					
19	2204-739-450-00	PLANTINGARM/K/R ASSY	*	6					
20	2213-739-301-20	ARM,PLANTING/E/RH	*	6			4L		
21	2204-738-412-10	COVER/PLANTING/PZ/E	*	6					
22	2142-736-235-00	GASKET	*	6					
23	2204-738-304-20	BUSH/08X18X36	*	6					
24	V120-366-003-00	SCREW/SP	*	12					
25	2161-738-222-00	SEAL,OIL	*	6					
26	2204-738-240-20	FROK/PLANT COMP	*	6					
27	2204-738-004-00	LOCKNUT	*	6					
28	2232-738-304-00	PLANTINGSEAL	*	6					
29	2703-501-006-00	CUSHION	*	6					
30	2204-738-414-10	PUSHINGOUTNUT/E	*	6					

FIG.153 COMPONENT PARTS(2/2)
FOR 2204-739-440-40 ON Fig.132

47~51-PLEASE SEE 1/2 PAGE

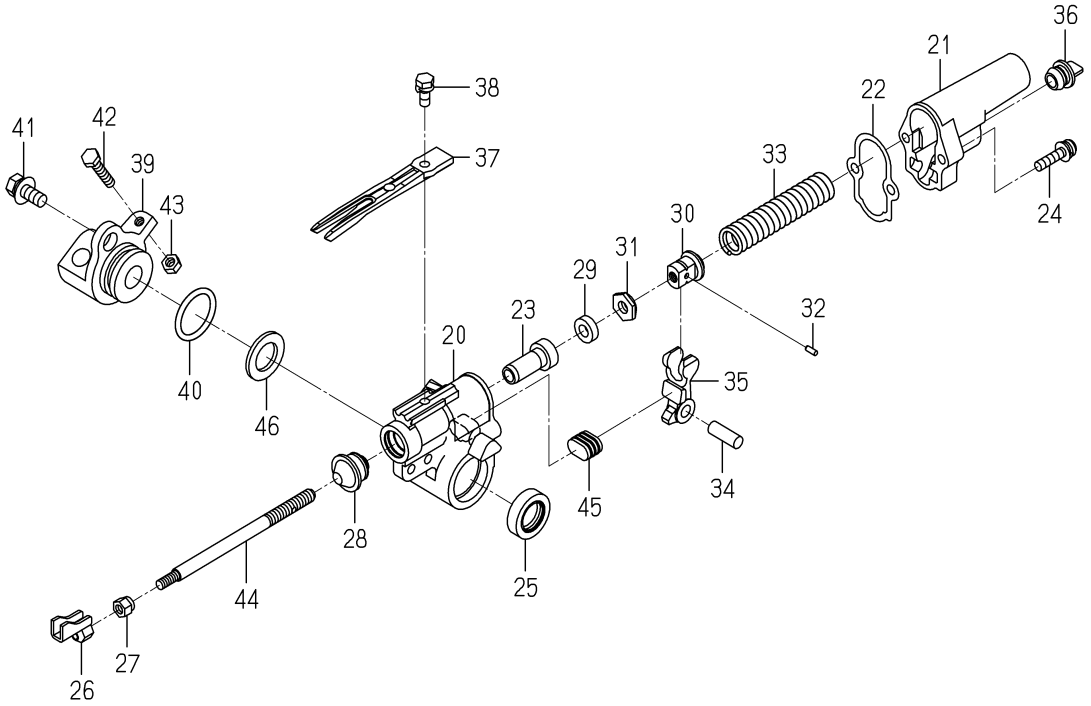

2204-739-440-4H

KEY	PART CODE	DESCRIPTION	SPC	TYPE OF MODEL NP60E16		ITC	COL	GRP	REMARKS
31	2703-501-008-00	NUT,LOCK PUSH OUT	*	6					
32	V523-100-300-80	PIN	*	6					
33	2204-738-413-10	SPRING/HC086	*	6					
34	2142-736-239-00	PIN,ARM PUSH-OUT	*	6					
35	2204-738-318-10	ARM/PUSH-OUT/PZ	*	6					
36	2204-738-001-00	CAP/YELLOW/10/KNOB	*	6					
37	2186-740-033-20	FINGER/14/G	*	6					
38	2204-738-059-00	BOLT/M6X16	*	6					
39	2204-738-312-00	HUB/PLANTING ARM	*	6			4L		
40	V720-103-502-80	O-RING/P28	*	6					
41	2186-738-059-00	BOLT/M8X20/SP/S	*	12					
42	V200-700-603-00	BOLT	*	6					
43	V301-700-006-00	NUT	*	6					
44	2204-738-005-00	SHAFT/FORK/PLANTING/	*	6					
45	2204-738-319-00	CUSHION/ARM/PZ	*	6					
46	2204-738-325-00	WASHER/M18	*	6					
47	2204-739-307-00	CAM/PUSHED OUT/RH	*	6					
48	2204-738-313-00	PIN/LOCKED	*	6					
49	2204-738-323-00	WASHER/09X18X03	*	6					
50	V401-700-008-00	WASHER/LOCK	*	6					
51	V304-700-008-00	NUT	*	6					

FIG.154 COMPONENT PARTS FOR 2232-686-250-40 ON Fig.121

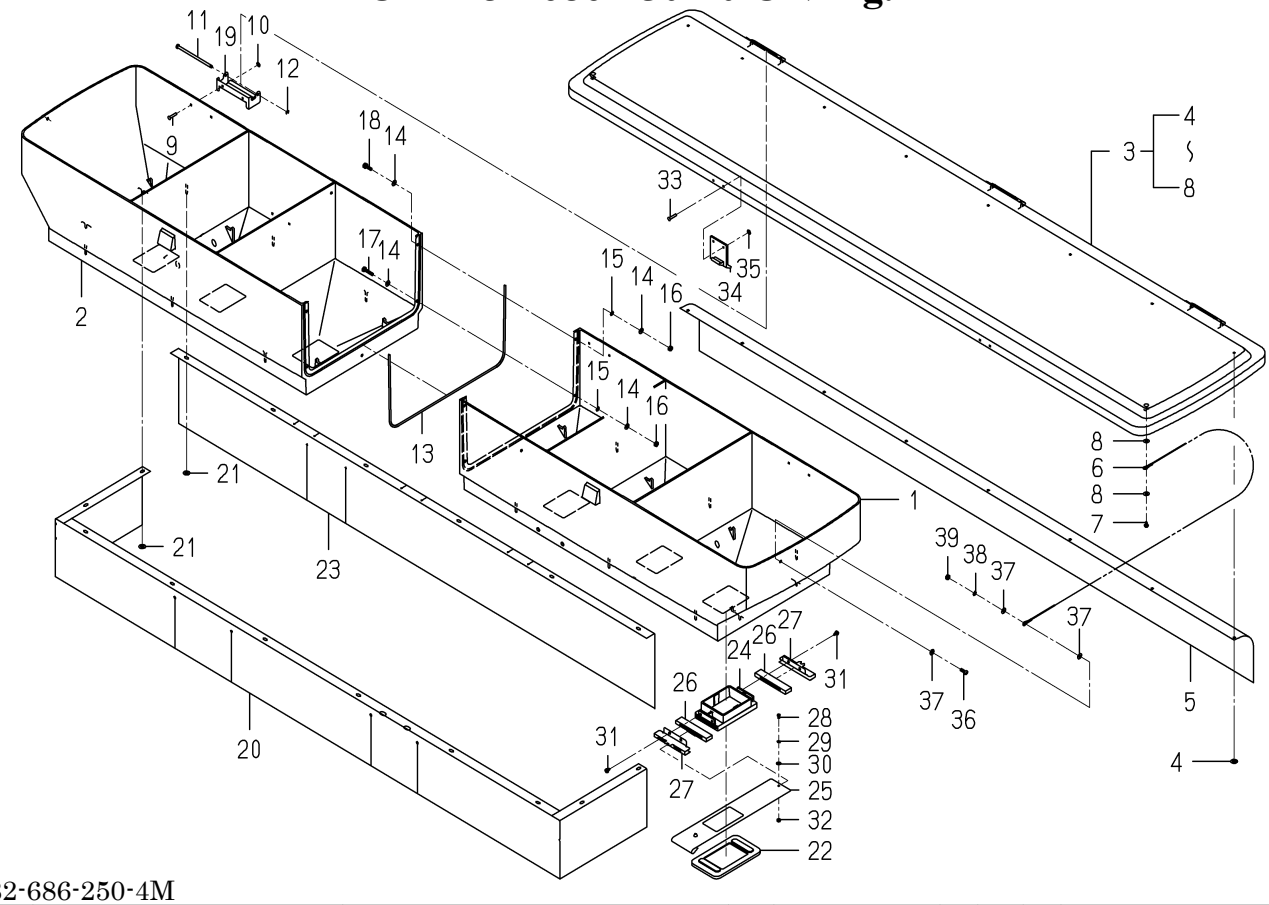

2232-686-250-4M

KEY	PART CODE	DESCRIPTION	SPC	TYPE OF MODEL NP60E16		ITC	COL	GRP	REMARKS
1	2232-686-001-10	HOPPER/3/LH/6	*	1					
2	2232-686-002-10	HOPPER/3/RH/6	*	1					
3	2232-686-260-10	COVER/HOPPER/6 ASSY	*	1					
4	2151-250-003-00	NUT,SPEED/4	*	8					
5	2232-686-011-10	SHEET/HOPPER/6	*	1					
6	8841-718-002-00	CABLE,HOPPER	*	2					
7	8841-716-009-00	PIN/+	*	2					
8	V411-700-004-00	WASHER	*	4					
9	8836-730-215-00	RIVET/BLIND/0	*	6					
10	V411-700-003-00	WASHER	*	6					
11	2232-686-016-00	PIN/04X86	*	3					
12	2145-770-214-00	RING, SNAP	*	3					
13	2232-686-009-10	PACKING/HOPPER	*	1					
14	V411-700-004-00	WASHER	*	10					
15	V401-700-004-00	WASHER/LOCK	*	5					
16	V301-700-004-00	NUT	*	5					
17	8841-716-011-00	BOLT/M4X20/SUS	*	2					
18	8836-730-216-00	BOLT/M4X14/SUS	*	3					
19	2232-686-004-10	HING/HOPPER	*	3					
20	2232-686-013-20	SHEET/HOPPER/6/LOWER	*	1					
21	2151-250-003-00	NUT,SPEED/4	*	16					
22	2232-686-012-10	GASKET/HOPPER	*	6					
23	2232-686-017-20	SHEET/HOPPER/6/REAR	*	1					
24	2232-686-019-20	HOPPERGUIDE	*	6					
25	2232-686-020-30	SHUTTER	*	6					
26	2232-686-021-30	PACKING/SHUTTER	*	12					
27	2232-686-023-10	PLATE/SHUTTERCOVER	*	12					
28	V111-703-000-60	SCREW	*	6					
29	V401-700-003-00	WASHER/LOCK	*	6					
30	V411-700-003-00	WASHER	*	12					

FIG.154 COMPONENT PARTS FOR 2232-686-250-40 ON Fig.121

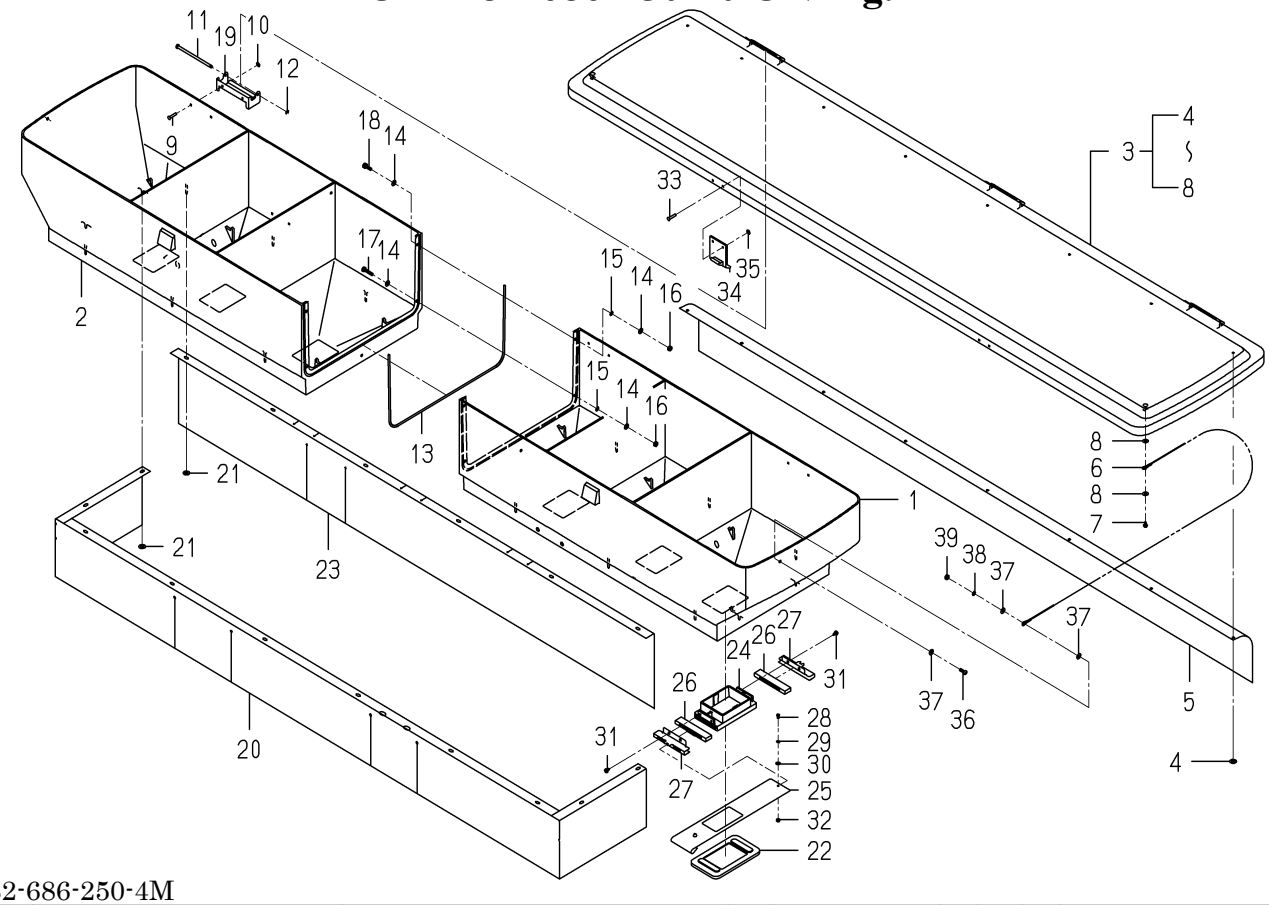

2232-686-250-4M

KEY	PART CODE	DESCRIPTION	SPC	TYPE OF MODEL NP60E16		ITC	COL	GRP	REMARKS
31	2150-761-005-00	SCREW/TAPPING	*	24					
32	V301-700-003-00	NUT	*	6					
33	8836-730-215-00	RIVET/BLIND/0	*	4					
34	2232-686-010-00	HOPPER HOOK	*	2					
35	V411-700-003-00	WASHER	*	4					
36	V111-164-001-20	SCREW/M4X12	*	2					
37	V411-700-004-00	WASHER	*	6					
38	V401-700-004-00	WASHER/LOCK	*	2					
39	V301-700-004-00	NUT	*	2					

WIRING DIAGRAM(1/5)

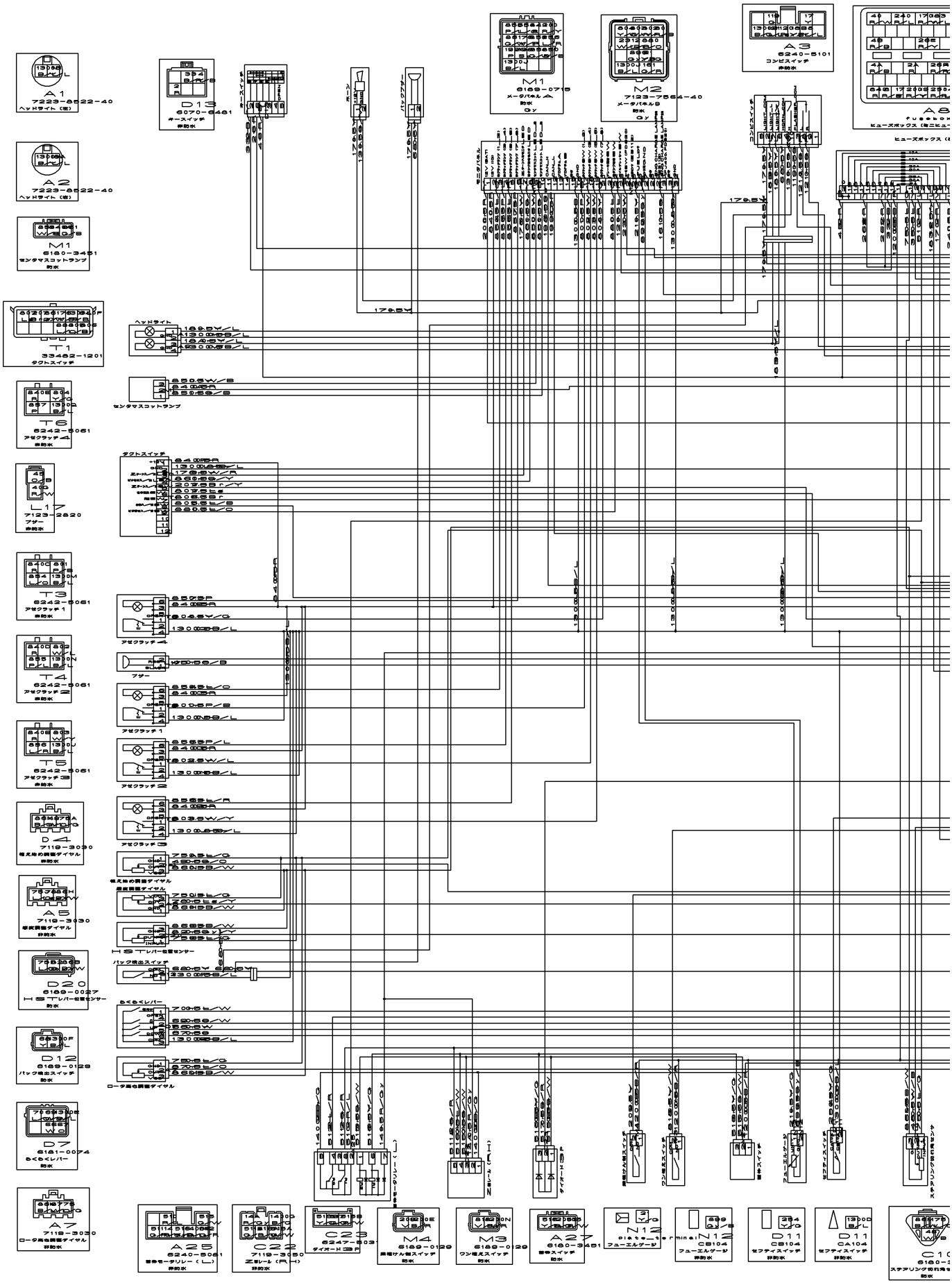

WIRING DIAGRAM(2/5)

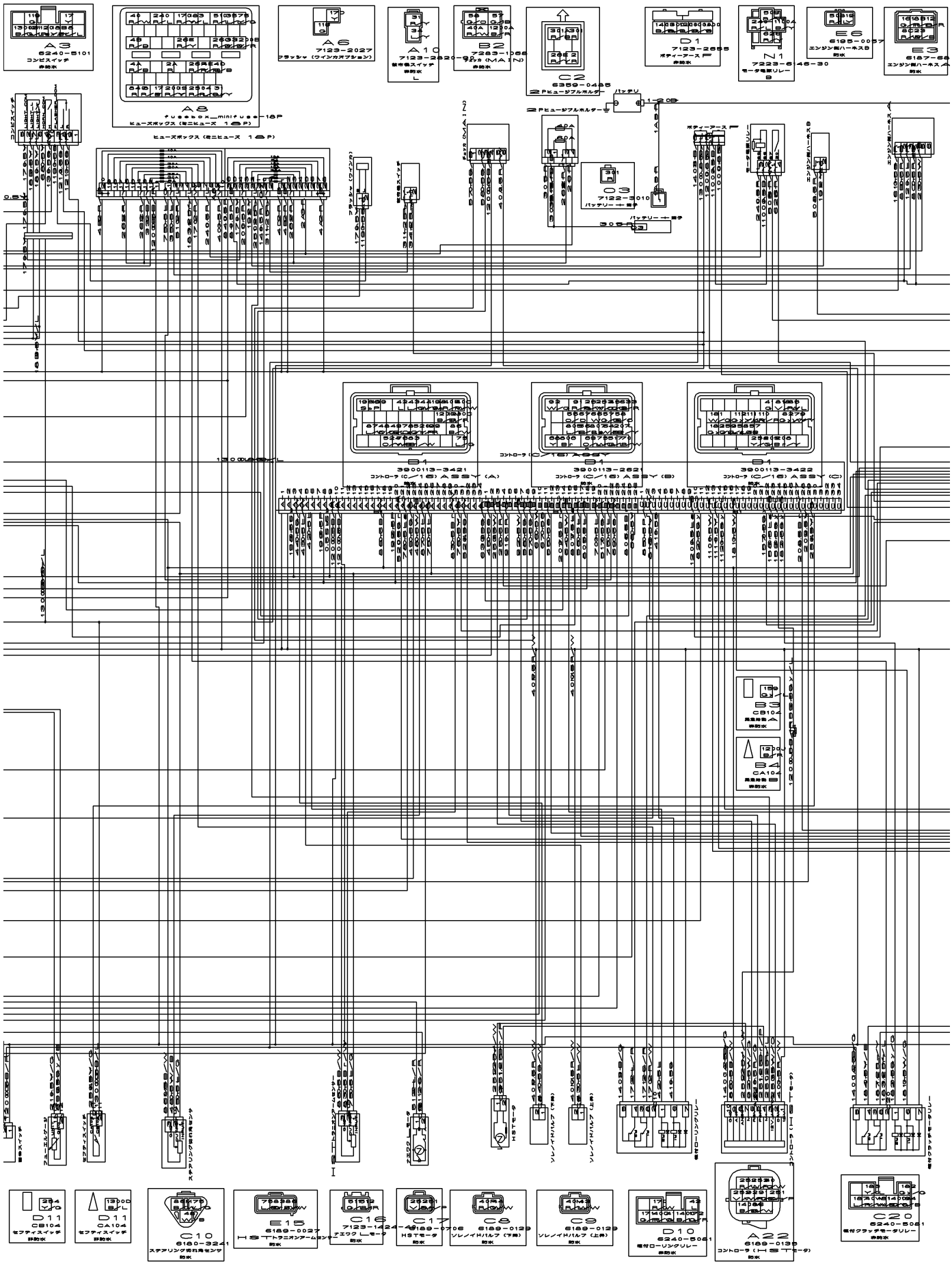

WIRING DIAGRAM(3/5)

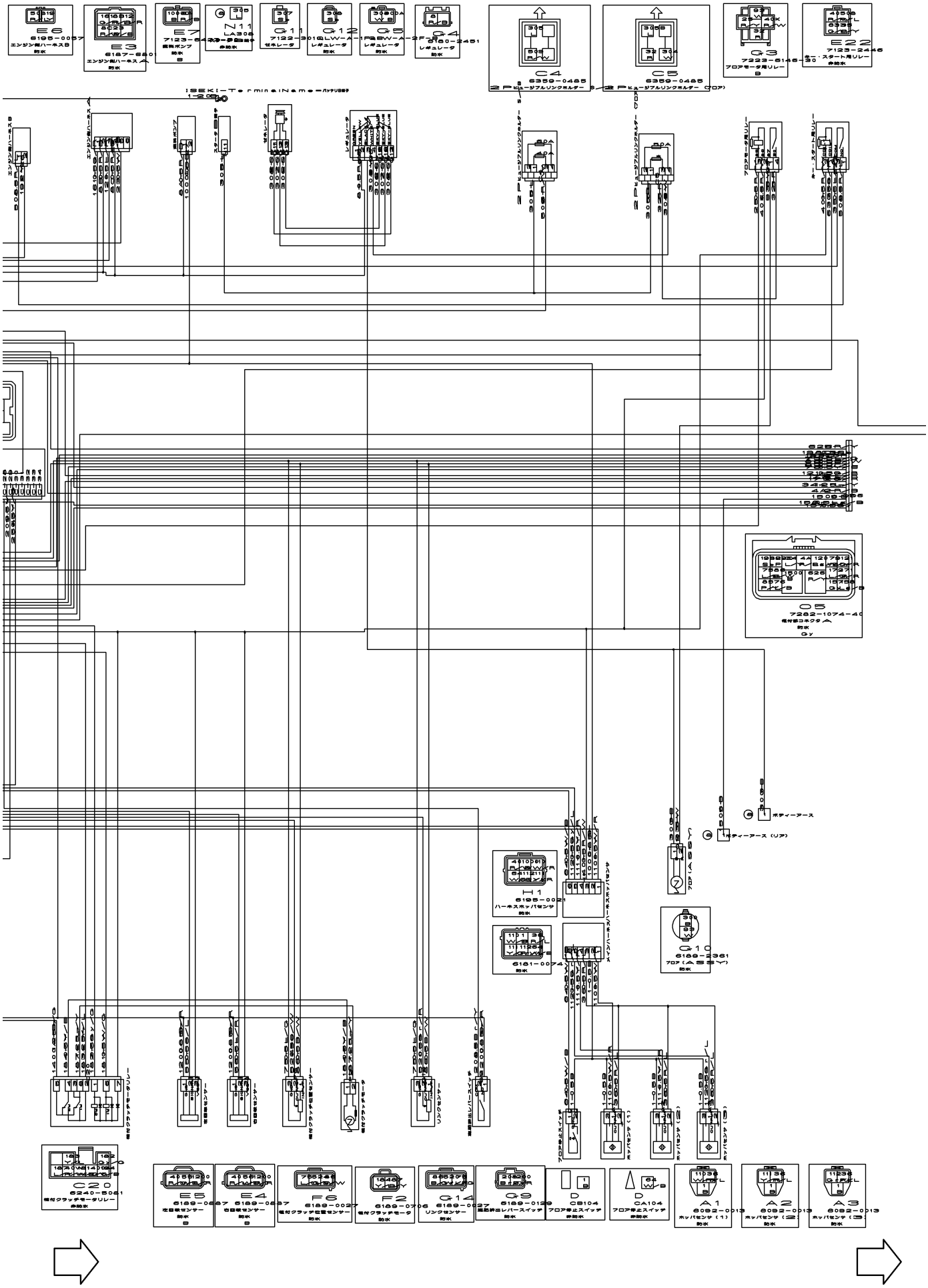

WIRING DIAGRAM(4/5)

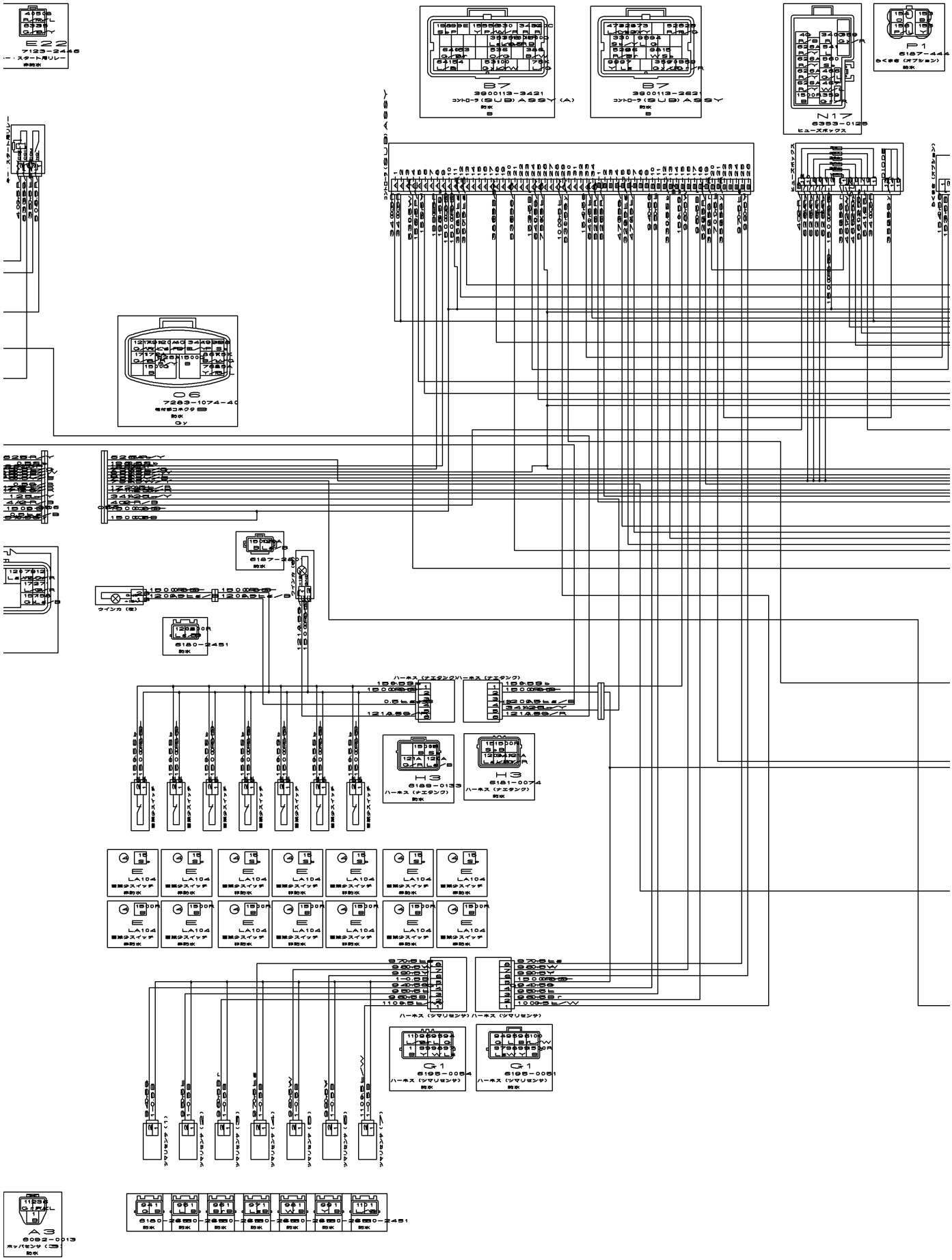

WIRING DIAGRAM(5/5)

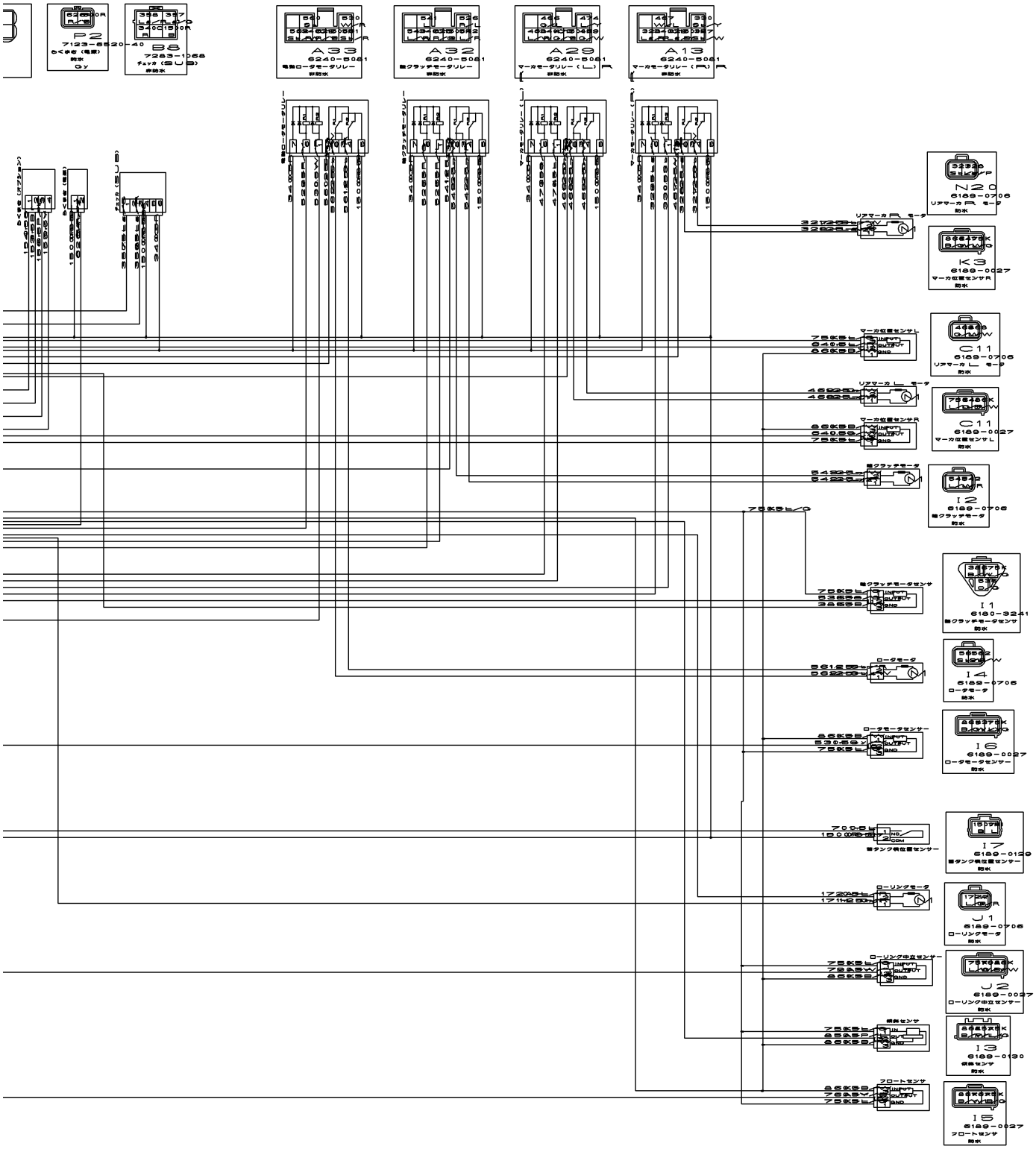

Numerical Index

Part Code	Fig.	Key	Part Code	Fig.	Key	Part Code	Fig.	Key
5110-042-107-XX	1	1	5130-812-085-XX	11	2	5160-412-259-XX	8	13
5110-080-830-XX	1	2	5130-912-068-XX	11	3	5160-602-201-XX	8	14
5110-086-047-XX	1	3	5130-AA0-520-XX	6	25	5160-732-098-XX	11	6
5110-092-024-XX	8	1	5130-AA0-630-XX	7	25	5160-732-222-XX	8	15
5110-092-566-XX	4	1	5130-AB0-812-XX	1	28	5161-152-126-XX	4	5
5110-092-766-XX	6	1	5130-BA0-612-XX	4	17	5161-260-725-XX	8	16
5110-092-769-XX	8	2	5130-BA0-614-XX	6	26	5161-262-146-XX	1	12
5110-093-028-XX	1	4	5130-BA0-616-XX	5	25	5161-420-714-XX	5	9
5110-112-253-XX	9	1		7	26	5161-462-235-XX	11	7
5110-112-254-XX	9	2	5130-BA0-620-XX	5	26	5161-462-241-XX	11	8
5110-121-084-XX	5	1		6	27	5161-542-053-XX	4	6
5110-130-045-XX	9	3		8	44	5161-542-054-XX	4	7
5110-132-161-XX	9	4	5130-BA0-625-XX	1	29	5161-712-075-XX	7	4
5110-222-081-XX	1	5	5130-BA0-816-XX	1	30	5161-712-097-XX	7	5
5110-222-082-XX	1	6		5	27	5187-AA0-520-XX	9	11
5110-472-057-9H	9	5	5130-BA0-865-XX	1	31	5210-392-059-XX	11	9
5110-472-125-XX	9	6	5130-CA0-645-XX	5	28	5210-402-052-XX	11	10
5110-482-039-XX	5	2		6	28	5210-662-070-XX	6	2
5110-532-070-XX	7	1		8	45	5210-802-054-XX	11	11
5110-562-996-9H	5	3	5130-CA0-665-XX	5	29	5211-192-160-XX	6	3
5110-602-079-XX	9	7	5130-CA0-675-XX	5	30	5211-212-094-XX	6	4
5110-602-084-XX	5	4	5130-CA0-830-XX	11	21	5211-302-060-XX	6	5
5110-602-087-XX	8	3	5130-CA0-860-XX	1	32	5211-632-147-XX	11	12
5110-602-088-XX	8	4	5130-CA0-870-XX	5	31	5211-882-009-XX	8	17
5110-602-089-XX	1	7	5131-072-097-XX	5	7	5211-930-008-XX	6	6
5110-602-449-XX	1	8	5131-072-296-XX	4	2	5214-AA0-414-XX	8	46
5110-602-450-XX	5	5	5131-160-713-XX	3	9	5214-AA0-510-XX	6	29
5110-602-451-XX	5	6	5131-682-131-XX	11	4	5214-AA0-512-XX	4	18
5110-612-118-XX	9	8	5131-832-419-XX	4	3	5215-120-329-HX	1	13
5110-612-119-XX	8	5	5132-362-163-XX	7	2	5225-AA0-414-XX	6	30
5110-612-199-XX	1	9	5132-362-164-XX	7	3	5241-AA0-406-XX	6	31
5110-652-118-XX	11	1	5132-510-034-XX	2	6	5260-311-659-XX	6	7
5120-042-115-XX	3	1	5132-510-042-XX	2	7	5260-312-058-XX	6	8
5120-052-093-XX	3	2	5132-712-054-XX	1	10	5270-102-182-XX	6	9
5120-092-067-XX	3	3	5140-242-113-XX	4	4	5270-102-234-XX	6	10
5120-112-056-XX	3	4	5140-242-205-XX	11	5	5270-107-005-XX	11	13
5120-162-056-XX	3	5	5140-242-292-XX	1	11	5270-342-058-XX	6	11
5120-202-059-XX	3	6	5140-912-102-XX	5	8	5311-AA0-600-XX	7	27
5120-322-064-XX	3	7	5150-040-874-XX	8	6	5311-BA0-600-XX	9	12
5120-440-803-XX	3	8	5160-142-075-XX	8	7	5312-AA0-500-XX	7	28
5130-012-204-XX	2	1	5160-202-140-XX	8	8	5320-852-097-XX	11	14
5130-021-013-XX	2	2	5160-250-020-XX	8	9	5390-032-102-XX	7	6
5130-086-025-XX	2	3	5160-302-067-XX	8	10	5390-622-051-XX	5	10
5130-256-008-XX	2	4	5160-312-066-XX	8	11	5390-762-053-XX	8	18
5130-292-131-XX	2	5	5160-412-249-XX	8	12	5391-082-057-XX	3	10

Numerical Index

Part Code	Fig.	Key	Part Code	Fig.	Key	Part Code	Fig.	Key
5391-292-091-XX	7	7	5920-022-277-XX	11	15	5920-662-099-XX	4	14
5411-AA0-600-XX	7	29	5920-042-142-XX	1	17	5920-707-004-XX	6	19
5420-362-060-XX	7	8	5920-091-109-XX	3	12	5920-721-195-XX	6	20
5430-560-008-XX	8	19	5920-092-080-XX	8	25	5920-721-237-XX	6	21
5430-782-055-XX	5	11	5920-092-081-XX	8	26	5920-727-003-XX	6	22
5461-DA0-600-XX	9	13	5920-092-273-XX	6	14	5920-812-009-XX	8	40
5480-J12-00X-XX	3	15	5920-092-308-XX	1	18	5920-812-077-XX	8	41
5490-156-310-XX	1	14	5920-092-381-XX	7	14	5920-932-002-XX	8	42
5490-442-066-XX	5	12	5920-151-137-XX	3	13	5921-407-003-XX	4	15
5490-542-056-XX	5	13	5920-151-143-XX	11	16	5921-412-122-XX	1	23
5490-631-056-XX	5	14	5920-151-339-XX	7	15	5921-431-336-XX	9	9
5490-652-071-XX	4	8	5920-151-367-XX	6	15	5921-432-135-XX	7	16
5490-652-072-XX	4	9	5920-152-146-XX	11	17	5921-432-148-XX	7	17
5490-782-082-XX	3	11	5920-152-147-XX	11	18	5921-442-052-XX	7	18
5491-032-162-XX	7	9	5920-152-167-XX	6	16	5921-452-056-XX	7	19
5491-102-093-XX	7	10	5920-222-231-XX	8	27	5921-452-125-XX	7	20
5491-132-178-XX	7	11	5920-222-245-XX	6	17	5921-452-132-XX	4	16
5491-190-005-XX	2	8	5920-272-003-XX	8	28	5921-502-197-XX	6	23
5491-200-840-XX	1	15	5920-272-004-XX	8	29	5921-502-230-XX	5	22
5491-210-010-XX	8	20	5920-272-025-XX	8	30	5921-502-231-XX	5	23
5491-212-248-XX	8	21	5920-332-067-XX	8	31	5921-502-285-XX	9	10
5491-232-083-XX	8	22	5920-332-081-XX	11	19	5921-512-067-XX	1	24
5510-232-175-XX	10	1	5920-360-21X-XX	2	10	5921-512-068-XX	8	43
5510-A51-00X-XX	6	32	5920-371-181-XX	5	19	5921-521-846-XX	6	24
5520-052-122-XX	4	10	5920-372-001-XX	10	3	5921-530-009-XX	7	21
5551-A03-14X-XX	5	32	5920-372-006-XX	8	32	5921-532-054-XX	2	12
5590-262-066-XX	6	12	5920-372-113-XX	10	4		2	13
5590-312-121-XX	6	13	5920-372-208-XX	6	18	5921-532-130-XX	1	25
5590-412-084-XX	5	15	5920-382-103-XX	2	11	5921-702-002-XX	1	26
5590-510-746-XX	2	9	5920-420-14X-XX	4	12	5921-702-042-XX	10	5
5590-512-113-XX	5	16		5	20	5921-902-139-XX	10	6
5590-512-114-XX	4	11	5920-431-037-XX	1	19	5921-912-055-XX	10	7
5590-712-119-XX	10	2	5920-432-006-XX	8	33	5921-922-054-XX	1	27
5590-717-025-XX	1	16	5920-432-227-XX	1	20	5922-002-035-XX	7	22
5590-760-011-XX	8	23	5920-492-109-XX	3	14	5922-002-036-XX	7	23
5592-562-057-XX	5	17	5920-492-111-XX	5	21	5922-002-044-XX	5	24
5593-362-052-XX	5	18	5920-492-112-XX	1	21	5922-002-091-XX	7	24
5670-B15-07X-XX	5	33	5920-492-255-XX	1	22	5922-102-085-XX	11	20
5670-B20-10X-XX	1	33	5920-552-086-XX	4	13			
5670-B20-11X-XX	4	19	5920-552-148-XX	8	34			
5670-B30-25X-XX	4	20	5920-592-011-XX	8	35			
5701-Q05-100-0X	8	47	5920-630-036-XX	8	36			
5920-022-087-XX	7	12	5920-630-714-XX	8	37			
5920-022-254-XX	8	24	5920-632-415-XX	8	38			
5920-022-269-XX	7	13	5920-640-022-XX	8	39			

Numerical Index

Part Code	Fig.	Key	Part Code	Fig.	Key	Part Code	Fig.	Key
1373-121-001-00	23	4	6209-625-001-00	25	10	6211-599-001-10	6	2
1729-202-001-00	20	14	6209-625-002-00	9	4		6	4
2182-104-520-00	23	1		25	12	6211-751-001-10	2	2
3625-540-004-00	9	31	6209-630-002-10	24	6	6211-760-053-10	5	31
3643-586-001-00	21	7		25	21	6211-766-009-10	5	32
3805-355-002-20	7	2	6209-730-005-00	12	3	6211-777-007-30	10	1
3817-401-001-00	9	7		20	12	6212-111-094-20	13	1
	11	20	6209-730-006-00	15	4	6212-114-094-20	14	1
	17	7	6209-740-001-00	9	22	6212-116-094-20	14	3
	17	12	6209-740-005-00	5	17	6212-121-014-20	13	2
	20	9	6209-749-001-20	5	15	6212-124-014-10	14	2
6209-000-002-00	11	18	6209-788-001-00	5	29	6212-126-014-10	14	4
6209-000-004-10	5	2	6209-920-002-00	9	16	6212-211-001-10	13	3
6209-000-043-00	15	9		16	12	6212-230-004-10	13	5
6209-000-044-00	1	7		25	13	6212-235-005-00	13	6
6209-030-043-00	20	18	6209-940-004-00	11	14	6212-271-016-00	13	7
6209-044-001-00	20	26	6211-110-057-30	1	1	6212-274-016-00	6	5
6209-046-015-00	15	7	6211-141-029-20	1	6	6212-276-016-00	6	6
6209-050-001-00	9	28		25	3	6212-310-009-50	15	1
6209-050-002-00	9	29	6211-170-004-20	2	1	6212-330-095-10	15	5
6209-300-014-00	1	8	6211-173-003-00	2	3	6212-333-003-00	15	6
6209-360-006-00	21	6		25	4	6212-371-074-10	15	8
6209-360-018-00	21	3	6211-210-037-80	5	1	6212-511-002-00	12	1
6209-360-028-20	2	6	6211-258-001-00	5	8	6212-521-008-00	15	3
6209-360-143-00	21	5		25	8	6212-522-010-00	12	2
6209-409-001-00	9	14	6211-258-002-00	5	9	6212-523-023-00	12	6
6209-409-003-00	11	17		25	9	6212-524-002-30	20	11
6209-440-007-00	23	6	6211-291-001-10	5	25	6212-531-014-00	5	6
6209-490-002-10	2	4	6211-292-001-20	5	26	6212-535-001-00	12	4
6209-500-003-00	9	12		25	11	6212-535-002-00	20	15
	9	21	6211-310-069-00	9	1	6212-551-028-00	11	1
	25	22	6211-311-048-10	9	32	6212-552-014-00	11	2
6209-572-003-00	2	5	6211-312-003-20	9	23	6212-561-001-10	11	3
	25	5		25	14	6212-563-005-00	11	4
6209-580-002-10	20	29	6211-312-004-20	9	33	6212-565-001-00	11	5
6209-587-001-00	13	4		25	15	6212-569-002-00	1	4
6209-600-004-00	9	20	6211-341-081-00	8	1		25	2
6209-605-004-10	1	3	6211-342-001-30	8	2	6212-571-006-00	11	6
6209-605-007-10	5	5	6211-361-104-00	7	1	6212-575-002-00	11	7
	9	2	6211-510-001-00	5	10	6212-600-002-10	11	8
6209-610-001-10	5	3	6211-511-003-00	5	11	6212-611-004-10	11	9
6209-610-007-00	9	3	6211-511-004-00	5	12	6212-616-002-00	11	16
6209-610-008-00	5	7	6211-540-001-00	6	1	6212-620-001-20	11	10
6209-610-009-00	5	4	6211-560-001-00	6	3	6212-626-002-10	11	11
6209-625-001-00	5	14	6211-599-001-10	5	13	6212-628-004-00	11	12

Numerical Index

Part Code	Fig.	Key	Part Code	Fig.	Key	Part Code	Fig.	Key
6212-628-005-00	11	13	6215-339-001-00	26	6	6215-345-043-00	26	49
6213-100-003-30	16	1	6215-342-001-00	26	3	6215-359-001-00	19	2
6213-111-001-30	16	2	6215-343-001-00	26	4	6215-359-002-00	26	50
6213-119-001-00	16	4	6215-345-001-00	26	7	6215-411-125-00	21	2
6213-129-003-00	16	3	6215-345-002-00	26	8	6215-411-126-10	19	4
6213-129-006-00	5	16	6215-345-003-00	26	9	6215-411-127-00	19	5
6213-140-032-00	16	6	6215-345-004-00	26	10	6215-411-128-00	19	6
6213-149-001-00	16	8	6215-345-005-00	26	11	6215-412-004-00	21	1
6213-160-002-20	9	24	6215-345-006-00	26	12	6215-520-001-00	20	17
6213-161-001-20	9	25	6215-345-007-00	26	13	6215-526-004-00	20	19
6213-164-001-00	9	26	6215-345-008-00	26	14	6215-531-025-00	20	24
6213-240-002-20	16	13	6215-345-009-00	26	15	6215-541-001-10	20	20
6213-311-006-00	16	10	6215-345-010-00	26	16	6215-541-012-20	20	25
6213-319-001-00	5	24	6215-345-011-00	26	17	6215-541-016-40	22	2
6213-610-005-50	17	1	6215-345-012-00	26	18	6215-542-004-20	9	17
6213-612-004-00	17	3	6215-345-013-00	26	19	6215-542-005-20	9	19
6213-613-002-10	17	2	6215-345-014-00	26	20	6215-542-006-00	20	22
6213-614-003-10	17	5	6215-345-015-00	26	21	6215-543-002-10	20	21
	25	17	6215-345-016-00	26	22	6215-546-003-30	9	13
6213-614-004-10	17	9	6215-345-017-00	26	23	6215-548-082-10	22	1
	25	18	6215-345-018-00	26	24	6215-549-007-10	20	30
6213-619-001-00	17	8	6215-345-019-00	26	25	6215-549-012-00	20	34
6213-619-003-00	17	4	6215-345-020-00	26	26	6215-549-013-00	5	28
6213-641-022-20	18	1	6215-345-021-00	26	27	6215-600-156-20	20	1
6213-669-021-00	18	3	6215-345-022-00	26	28	6215-611-001-00	27	6
6213-669-022-00	18	4	6215-345-023-00	26	29	6215-612-001-00	27	9
6213-671-053-00	18	5	6215-345-024-00	26	30	6215-619-009-00	20	3
6213-674-046-00	23	2	6215-345-025-00	26	31	6215-619-010-00	20	2
6213-711-018-00	17	19	6215-345-026-00	26	32	6215-619-022-00	27	8
6213-716-001-60	17	15	6215-345-027-00	26	33	6215-621-016-20	20	10
6213-729-013-10	17	13	6215-345-028-00	26	34	6215-622-001-00	27	12
6213-743-002-10	17	16	6215-345-029-00	26	35	6215-629-001-00	27	10
	25	19	6215-345-030-00	26	36	6215-629-002-00	27	11
6214-111-011-20	3	1	6215-345-031-00	26	37	6215-629-003-00	27	18
6214-115-001-20	3	2	6215-345-032-00	26	38	6215-629-004-00	27	19
	25	6	6215-345-033-00	26	39	6215-629-005-00	27	20
6214-141-008-20	4	1	6215-345-034-00	26	40	6215-629-006-00	27	21
6214-145-001-30	4	2	6215-345-035-00	26	41	6215-629-007-00	27	22
	25	7	6215-345-036-00	26	42	6215-629-008-00	27	23
6215-300-036-10	19	1	6215-345-037-00	26	43	6215-629-009-00	27	24
6215-311-027-00	26	51	6215-345-038-00	26	44	6215-629-010-00	27	25
6215-315-002-00	19	3	6215-345-039-00	26	45	6215-629-011-00	27	26
6215-330-024-10	26	1	6215-345-040-00	26	46	6215-629-012-00	27	27
6215-331-008-00	26	2	6215-345-041-00	26	47	6215-629-013-00	27	28
6215-332-013-00	26	5	6215-345-042-00	26	48	6215-629-014-00	27	29

Numerical Index

Part Code	Fig.	Key	Part Code	Fig.	Key	Part Code	Fig.	Key
6215-629-015-00	27	30	6281-129-076-00	28	25	V231-360-802-50	9	36
6215-629-016-00	27	31	6281-129-077-00	28	26		17	21
6215-631-035-00	27	7	6281-129-078-00	28	27	V231-360-803-00	9	11
6215-634-001-00	27	16	6281-129-079-00	28	34	V231-360-804-00	3	4
6215-635-001-00	27	14	6281-129-080-00	28	8		17	22
6215-637-001-00	27	13	6281-151-014-00	28	20	V231-360-804-50	9	9
6215-639-004-00	27	15	6281-410-026-10	24	3		17	6
6215-639-005-00	27	17	6281-910-013-00	24	5	V231-360-805-00	11	19
6215-641-006-00	27	5	6281-971-001-10	24	1	V231-360-805-50	9	6
6215-643-006-00	27	1	6282-450-008-00	24	2	V231-360-807-50	9	10
6215-644-007-00	27	2	6287-810-035-00	25	1		17	18
6215-649-002-00	27	4	6294-453-002-00	5	21	V231-360-808-50	9	5
6215-649-019-00	27	3	6901-911-020-00	8	3	V233-361-002-00	10	2
6219-732-017-00	24	4	6901-911-025-00	23	8	V233-361-007-00	23	5
6219-752-044-00	20	5	6902-050-816-00	9	34	V301-260-006-00	5	30
6219-752-045-00	20	4	6904-110-818-00	5	19		9	30
6219-752-046-00	20	6	6904-110-822-00	4	4		20	31
6219-752-047-00	20	7		5	20	V302-260-006-00	20	27
6281-100-014-00	23	7	6904-110-840-00	5	18	V341-120-008-00	9	15
6281-111-009-00	28	1		17	10	V401-160-006-00	20	33
6281-115-017-00	28	10	6909-110-408-00	28	32	V411-260-006-00	20	32
6281-115-018-00	28	11	6909-150-508-00	28	31	V523-101-001-80	15	2
6281-117-003-00	28	4	6909-902-299-00	5	22	V600-110-620-30	20	13
6281-118-007-00	28	3	6909-906-105-10	16	11	V682-200-000-60	1	5
6281-119-009-00	28	2	6911-129-006-00	1	2	V704-140-016-00	11	15
6281-121-010-00	28	5	J061-210-015-00	17	14	V705-140-012-00	9	27
6281-124-011-00	28	6	J062-076-082-00	21	4	V710-140-004-00	20	23
6281-127-003-00	28	19	J062-087-093-00	21	8	V720-101-900-80	20	28
6281-129-029-00	28	29	P117-303-003-00	9	18	V720-102-401-50	16	7
6281-129-030-00	28	28	V201-360-802-00	20	8		25	16
6281-129-043-00	28	30	V210-560-601-20	12	5	V720-102-401-80	7	3
6281-129-058-00	28	9		20	16	V723-102-005-50	17	20
6281-129-062-00	28	33	V210-560-602-50	16	5		25	20
6281-129-064-00	28	7	V211-560-802-00	9	35	V782-160-000-4T	5	23
6281-129-065-00	28	12	V211-560-802-50	4	3			
6281-129-066-00	28	13	V230-360-601-00	7	4			
6281-129-067-00	28	14	V230-360-601-20	5	27			
6281-129-068-00	28	15	V230-360-601-60	18	2			
6281-129-069-00	28	16		24	7			
6281-129-070-00	28	17	V231-360-801-60	9	8			
6281-129-071-00	28	18		16	9			
6281-129-072-00	28	21	V231-360-802-00	3	3			
6281-129-073-00	28	22		17	11			
6281-129-074-00	28	23		17	17			
6281-129-075-00	28	24		23	3			

Numerical Index

Part Code	Fig.	Key
1110-401-002-00	14	9
	17	19
	18	19
1308-230-002-00	107	45
1329-106-002-00	76	14
	77	14
1337-708-007-00	40	5
1337-721-002-00	15	11
1342-402-006-00	3	46
	92	29
1376-402-003-00	92	28
	117	3
	120	79
	125	5
1421-201-002-00	150	45
	151	35
1425-621-004-00	3	17
	29	16
1426-406-203-00	56	2
1426-621-038-00	88	5
1444-621-242-00	135	2
1488-611-003-10	85	6
1491-623-222-00	89	34
	90	35
1491-623-223-00	89	35
	90	36
1541-621-210-00	84	7
1544-104-205-00	4	21
1544-623-008-10	92	22
1560-132-007-30	14	21
	17	15
	18	15
	106	22
	115	60
	116	59
1560-666-004-00	105	4
1560-695-021-00	14	18
	17	12
	18	12
	42	1
	106	19
	115	61
	116	60
1560-695-022-00	14	20
	17	14

Part Code	Fig.	Key
1560-695-022-00	18	14
	106	20
	115	59
	116	58
1564-263-002-00	55	49
1575-616-005-00	119	11
1594-221-001-00	55	9
1600-619-212-00	84	8
1614-690-202-00	91	17
1650-102-202-10	3	20
1650-104-201-00	4	22
1650-509-280-00	72	7
	73	7
1650-650-222-00	91	8
	92	9
1650-650-243-00	91	9
	92	10
1650-658-270-00	91	24
	92	23
1656-509-310-10	72	9
1675-104-211-00	4	19
1675-104-213-00	4	20
1675-503-001-00	70	4
	71	4
1675-695-005-00	89	16
	90	16
1690-505-240-00	107	52
1690-652-210-00	91	23
1705-408-230-00	73	9
1716-510-004-00	70	12
1716-601-003-00	97	6
	137	8
1716-680-200-20	89	21
1716-680-290-00	89	45
	90	46
1716-782-005-00	3	33
1716-901-016-00	143	4
	144	5
1719-650-250-00	91	12
	92	13
1719-730-002-00	3	25
	4	9
1725-210-002-00	15	15
	16	22
1725-508-001-00	61	5

Part Code	Fig.	Key
1728-104-210-00	4	18
1728-112-250-10	94	4
1729-111-006-10	10	11
	11	10
1729-111-284-00	10	9
	11	9
1729-609-240-00	89	15
	90	15
1729-662-330-00	17	5
	18	5
	69	9
	101	12
1729-662-340-00	12	19
	13	19
	67	8
	68	8
	106	13
	113	14
	129	23
1740-680-530-20	89	39
	90	40
1747-111-410-10	10	8
	11	8
1754-640-230-10	91	25
	92	30
1756-905-071-00	141	4
	142	4
1757-509-012-00	70	10
	71	10
2110-325-003-00	107	41
2111-441-019-20	54	64
	55	63
2120-409-004-00	111	7
2130-601-018-00	137	19
	140	5
2130-610-012-00	107	30
2130-725-006-00	101	15
	101	35
2130-755-002-00	56	7
2130-802-011-10	126	8
2130-802-208-00	133	6
2132-161-005-00	131	4
	132	4
2132-210-005-00	35	6
	35	12

Part Code	Fig.	Key	Part Code	Fig.	Key	Part Code	Fig.	Key
2132-210-005-00	35	18	2144-735-006-00	5	12	2161-532-203-00	88	3
2132-513-001-00	81	6	2144-738-216-00	152	14	2161-612-002-10	109	3
2132-544-200-10	135	1		153	14	2161-615-014-00	19	8
2132-545-008-00	101	8	2144-930-002-10	148	4		20	7
	113	13		149	4	2161-701-005-00	123	28
2132-801-220-10	133	26	2145-420-001-20	52	3	2161-701-006-10	123	29
2133-812-009-00	81	8	2145-542-230-00	117	16	2161-735-005-00	52	5
2137-330-004-00	106	8	2145-542-232-10	117	17		52	8
2139-807-005-00	136	8	2145-751-003-00	123	50		54	65
2140-420-012-10	98	27	2145-751-004-00	82	5		55	64
2142-101-005-00	103	8		83	5		57	13
2142-307-002-00	38	5		118	29		57	25
	39	5	2145-770-014-00	115	56		91	21
2142-407-002-10	9	11		116	55		92	24
2142-736-203-10	131	3		120	30		98	29
	132	3		120	60		118	26
2142-736-214-00	152	7	2145-770-214-00	154	12		120	82
	153	7	2145-774-003-00	101	16		138	52
2142-736-221-00	152	16		115	8	2161-735-006-00	14	30
	153	16		115	10		17	33
2142-736-224-00	152	6		116	8		18	32
	153	6		116	10		19	4
2142-736-235-00	152	22	2146-640-001-60	112	1		20	3
	153	22	2150-761-005-00	154	31		37	5
2142-736-236-00	107	5	2151-250-003-00	154	4		42	6
	108	13		154	21		57	15
	123	31	2151-603-003-00	15	10		69	14
2142-736-239-00	152	34	2151-810-004-10	89	36		106	9
	153	34		90	37		106	11
2142-736-271-00	152	11	2157-201-004-10	54	6		114	6
	153	11		55	6		118	24
2144-117-002-00	87	4	2161-103-001-00	6	2	2161-738-008-00	152	18
2144-301-005-10	56	3	2161-214-003-00	37	3		153	18
2144-337-007-00	7	8		53	7	2161-738-222-00	152	25
2144-501-011-10	3	36	2161-321-001-00	50	3		153	25
	3	44		51	3	2161-738-611-00	152	15
	81	4	2161-330-004-00	54	31	2161-739-611-00	153	15
	89	25		54	40	2161-831-003-10	133	15
	90	26		55	30	2161-831-007-00	133	21
2144-542-220-00	89	33		55	39	2161-831-209-00	133	10
	90	34	2161-506-005-00	89	28	2161-831-211-00	133	7
2144-701-021-00	26	11		90	29		133	19
	27	11	2161-513-051-10	81	3	2161-831-231-30	133	2
	33	32	2161-528-001-00	87	7	2161-834-001-40	137	15
	34	32	2161-532-202-00	88	2	2161-834-004-00	133	8

Numerical Index

Part Code	Fig.	Key	Part Code	Fig.	Key	Part Code	Fig.	Key
2161-834-007-00	137	13	2186-508-017-00	55	67	2186-916-010-30	142	7
2161-835-019-00	138	26	2186-528-007-00	87	8	2186-916-019-10	143	15
2161-835-021-00	138	28	2186-528-244-00	87	10		144	15
2161-835-022-00	138	29		119	36	2186-916-032-20	143	13
2161-971-004-00	148	2	2186-533-002-00	65	8	2186-916-035-10	143	14
	149	2		66	8		144	14
2162-105-001-00	5	3	2186-536-210-20	90	21	2186-916-042-00	141	10
2162-330-007-00	54	55	2186-536-211-00	89	22		142	9
	55	54		90	22	2186-916-043-00	141	11
2162-940-001-00	148	5	2186-536-212-00	89	23		142	10
	149	5		90	23	2186-916-044-00	141	12
2163-526-006-00	81	12	2186-703-220-02	123	36		142	11
2163-617-004-00	112	2	2186-707-001-00	129	7	2186-916-045-00	141	13
2163-703-004-10	118	49	2186-707-006-00	129	6		142	12
2163-802-007-00	98	18	2186-738-038-20	59	8	2186-916-046-00	141	14
2171-513-002-00	19	2		133	16		142	13
2171-519-019-10	57	16		152	17	2188-105-004-00	9	10
2172-124-004-00	87	3		153	17	2188-201-007-00	21	11
	120	90	2186-738-059-00	152	41	2188-208-015-00	115	31
2172-312-002-00	43	44		153	41		115	45
	44	41	2186-740-033-20	152	37		116	31
2175-325-007-00	82	6		153	37		116	44
	83	6	2186-801-001-00	133	18		118	34
2175-528-008-20	87	9	2186-801-701-00	133	3	2188-301-006-00	56	11
2178-421-003-00	14	10	2186-801-702-00	133	4	2188-804-004-00	137	3
	17	20	2186-802-051-00	135	5	2190-805-012-00	130	4
	18	20	2186-804-008-00	137	17	2190-916-007-00	143	11
2178-503-246-00	43	36	2186-804-300-00	137	1		144	12
	44	32	2186-805-003-00	120	71	2190-916-008-00	143	12
2178-631-013-00	16	11		138	18		144	13
2180-203-002-00	33	28	2186-805-004-20	138	22	2194-106-002-00	7	9
	34	28	2186-805-005-00	138	20	2194-210-001-00	35	4
2182-803-008-00	121	3	2186-805-008-00	138	34		35	10
2183-526-001-10	129	4	2186-805-011-00	125	12	2194-301-009-00	72	3
2183-526-008-00	120	77		138	35		73	3
2183-613-003-00	110	6	2186-805-026-00	133	30	2194-321-001-00	50	4
	127	5	2186-916-001-20	141	1		51	4
2186-312-002-00	43	47		142	1	2194-338-003-20	8	4
	44	44	2186-916-002-20	141	2		103	3
2186-336-003-00	69	13		142	2		105	3
2186-508-009-00	76	6	2186-916-007-10	141	5	2194-410-006-00	21	9
	76	18		142	5	2194-508-008-00	79	8
	77	6	2186-916-009-20	141	6		80	8
	77	18		142	6	2194-508-009-00	79	10
2186-508-017-00	54	68	2186-916-010-30	141	7		80	10

Part Code	Fig.	Key
2194-508-016-00	119	7
2194-508-220-10	79	7
	80	7
2194-543-001-00	101	7
	113	12
2194-543-200-00	101	4
	113	9
2194-701-010-00	33	11
	34	11
	123	13
2194-701-020-00	123	21
2194-901-016-00	134	3
	135	8
2197-704-002-00	89	4
	90	4
2200-911-004-00	3	18
2201-201-002-00	107	33
2204-101-001-20	3	8
2204-101-390-50	3	9
2204-101-950-00	1	1
2204-102-002-00	3	32
2204-105-009-00	7	2
2204-105-013-00	7	3
	8	5
2204-105-240-20	7	5
2204-111-005-40	10	14
2204-111-006-10	10	7
	11	7
2204-111-025-00	11	21
2204-124-005-00	12	23
2204-124-006-00	12	24
	13	24
2204-124-631-00	12	2
	13	2
2204-201-003-00	21	8
2204-207-001-10	28	6
	29	6
2204-207-012-30	28	10
	29	10
2204-208-002-10	30	5
2204-208-007-20	30	4
2204-208-018-00	30	12
2204-222-001-00	38	3
	39	3
2204-302-200-10	40	6

Part Code	Fig.	Key
2204-323-011-00	48	2
	49	2
	54	58
	55	57
2204-331-008-00	56	8
2204-336-002-00	57	7
2204-336-005-00	57	14
2204-336-009-00	57	10
2204-343-001-00	58	3
2204-401-200-00	59	1
2204-411-001-00	62	2
	63	2
2204-440-001-20	72	5
	73	5
2204-440-300-10	72	1
	73	1
2204-440-310-00	72	2
	73	2
2204-501-005-00	76	2
	77	2
2204-508-052-00	76	13
	77	13
2204-512-003-10	79	5
	80	5
2204-513-003-00	126	18
2204-513-014-00	81	9
2204-513-026-00	126	17
2204-513-650-32	81	1
2204-513-660-32	81	2
2204-513-670-02	81	5
2204-513-680-00	81	11
2204-514-003-00	82	8
	83	8
2204-514-210-00	82	4
	83	4
2204-515-001-02	84	2
2204-515-300-02	84	1
2204-536-551-00	89	18
	90	18
2204-537-002-00	67	7
	68	7
	91	19
	92	19
	92	27
2204-537-202-00	91	7

Part Code	Fig.	Key
2204-537-202-00	92	7
2204-538-211-00	91	2
	92	2
2204-539-200-30	93	1
2204-542-200-00	89	42
	90	43
2204-556-003-00	36	4
2204-581-049-00	99	8
2204-582-012-00	100	8
2204-582-015-00	100	10
	100	15
	114	4
2204-582-052-00	100	1
2204-582-055-00	100	2
	100	12
2204-582-059-00	100	5
2204-582-062-00	100	4
	100	14
2204-582-063-00	100	3
	100	13
2204-589-051-00	102	2
2204-589-052-00	102	26
2204-589-053-00	102	3
2204-589-057-10	102	6
	102	28
2204-589-058-10	102	9
	102	31
2204-589-059-10	102	36
2204-589-061-10	102	14
2204-589-062-00	102	19
2204-589-063-00	102	15
2204-589-065-00	102	13
	102	18
	102	20
	102	33
	102	40
2204-589-066-00	102	5
	102	27
2204-589-067-00	102	24
2204-589-068-00	102	7
	102	29
2204-589-500-00	102	1
2204-589-510-00	102	25
2204-601-007-00	7	4
	48	3

Numerical Index

Part Code	Fig.	Key	Part Code	Fig.	Key	Part Code	Fig.	Key
2204-601-007-00	49	3	2204-738-414-10	152	30	2213-101-250-10	3	6
2204-603-009-00	122	10		153	30	2213-101-602-10	3	28
2204-607-022-00	107	39	2204-738-440-40	131	1	2213-102-002-00	4	14
2204-618-002-00	113	3	2204-738-450-00	152	19	2213-102-052-00	4	39
2204-618-008-00	113	7	2204-739-273-00	153	4	2213-102-300-10	3	19
2204-618-200-30	113	1	2204-739-275-20	153	9	2213-102-400-00	4	1
2204-706-011-10	127	2	2204-739-277-00	153	10	2213-102-401-00	4	2
2204-738-001-00	152	36	2204-739-282-20	153	2	2213-102-402-00	4	3
	153	36	2204-739-307-00	153	47	2213-102-403-00	4	4
2204-738-004-00	152	27	2204-739-340-10	153	1	2213-102-404-00	4	5
	153	27	2204-739-440-40	132	1	2213-102-405-00	4	6
2204-738-005-00	152	44	2204-739-450-00	153	19	2213-111-002-10	11	19
	153	44	2204-801-018-00	125	7	2213-111-014-00	10	12
2204-738-059-00	152	38	2204-801-019-00	125	8	2213-111-300-10	10	3
	153	38	2204-803-015-20	136	13		11	3
2204-738-080-10	148	3	2204-803-016-20	136	14	2213-204-200-00	26	7
	149	3	2204-803-024-00	136	19		27	7
2204-738-240-20	152	26	2204-803-025-00	136	18	2213-310-004-00	43	3
	153	26	2204-803-068-00	115	6		43	51
2204-738-273-00	152	4		116	6		44	3
2204-738-274-00	152	8		118	50		44	48
	153	8		122	28	2213-330-006-10	54	4
2204-738-275-20	152	9		136	17		55	4
2204-738-277-00	152	10	2204-803-350-00	136	15	2213-413-001-10	64	3
2204-738-282-20	152	2	2204-804-400-00	137	2	2213-422-022-00	107	34
2204-738-304-20	152	23	2204-805-005-10	138	19	2213-508-004-00	47	2
	153	23	2204-805-008-00	138	25		76	9
2204-738-307-00	152	47	2204-805-025-00	138	27		76	12
2204-738-312-00	152	39	2204-831-001-00	137	11		77	9
	153	39	2204-916-001-00	141	8		77	12
2204-738-313-00	152	48		142	8	2213-512-003-10	79	2
	153	48	2204-916-002-00	141	3		80	2
2204-738-318-10	152	35		142	3	2213-516-006-00	101	31
	153	35	2204-916-022-20	145	3		126	19
2204-738-319-00	152	45	2209-508-013-00	79	9	2213-517-003-10	85	4
	153	45		80	9	2213-517-201-00	85	2
2204-738-323-00	152	49	2209-518-002-10	57	19	2213-581-200-00	99	6
	153	49	2209-801-203-00	140	2	2213-583-053-00	101	24
2204-738-325-00	152	46	2213-101-001-10	2	4	2213-607-041-10	107	25
	153	46	2213-101-002-10	2	5	2213-607-042-20	107	26
2204-738-340-10	152	1	2213-101-015-10	2	24	2213-701-001-10	123	40
2204-738-412-10	152	21	2213-101-016-00	2	25	2213-701-003-10	123	39
	153	21	2213-101-018-00	2	2	2213-701-023-00	17	28
2204-738-413-10	152	33	2213-101-027-00	3	15		18	28
	153	33	2213-101-210-00	2	1		123	20

Part Code	Fig.	Key	Part Code	Fig.	Key	Part Code	Fig.	Key
2213-738-301-20	152	20	2232-125-005-00	14	28	2232-203-200-10	24	1
2213-739-301-20	153	20	2232-125-006-00	14	3	2232-204-001-20	26	1
2213-801-008-00	125	9	2232-125-007-00	14	24		27	1
2213-801-014-00	125	10	2232-125-008-00	14	29	2232-204-002-30	26	2
2213-803-009-10	136	11	2232-125-009-00	14	25		27	2
2213-804-007-00	137	5	2232-125-200-00	14	1	2232-204-004-00	26	4
2213-916-005-00	144	9	2232-125-230-00	14	17	2232-204-005-00	26	5
2213-916-008-00	143	8	2232-125-250-00	14	8		27	5
2213-916-060-00	143	16	2232-131-001-10	15	9	2232-204-006-00	26	6
2220-101-700-00	5	1	2232-131-003-00	15	14		27	6
2220-618-002-10	104	1	2232-131-005-00	15	16	2232-204-008-00	26	10
2220-703-001-00	125	6	2232-132-001-00	17	25		27	10
2221-111-200-00	10	18		18	25	2232-204-210-00	26	12
	11	14	2232-132-004-00	17	9		27	12
2232-101-002-00	3	13		18	9	2232-207-001-00	28	1
2232-101-004-00	3	7	2232-132-005-10	17	7		29	1
2232-101-061-00	3	27		18	7	2232-207-002-20	28	7
2232-101-230-10	5	13	2232-132-006-20	17	31		29	7
2232-102-007-00	3	45		18	30	2232-207-004-00	28	4
2232-102-011-20	3	22	2232-132-007-20	17	32		29	4
2232-102-015-10	3	43		18	31	2232-207-200-00	28	5
2232-102-016-10	3	35	2232-132-008-00	17	1	2232-208-001-20	30	1
2232-102-022-00	3	30		18	1	2232-208-002-00	30	15
2232-102-250-10	3	23	2232-132-009-00	17	36	2232-208-003-00	30	14
2232-102-260-40	3	37		18	35	2232-208-004-00	30	16
2232-103-200-00	6	1	2232-132-210-10	17	18	2232-208-005-10	30	13
2232-105-005-10	7	1		18	18	2232-208-006-00	30	10
2232-111-001-10	10	1	2232-132-220-00	17	11	2232-208-007-00	30	11
	11	1		18	11	2232-208-008-00	30	17
2232-111-006-00	11	12	2232-132-230-00	17	24	2232-208-009-10	30	2
2232-111-007-00	10	15		18	24	2232-208-011-00	30	3
	11	11	2232-132-240-10	17	29	2232-209-001-10	31	4
2232-111-008-00	10	16	2232-137-001-10	19	1		32	4
2232-124-001-00	12	12	2232-137-006-00	19	10	2232-209-005-00	31	7
	13	12	2232-137-200-10	19	5		32	7
2232-124-003-00	12	5	2232-137-220-00	19	3	2232-209-006-00	31	8
	13	5	2232-201-001-40	21	1	2232-209-007-00	31	1
2232-124-004-10	12	21	2232-201-002-20	21	2		32	1
2232-124-200-20	12	1	2232-201-003-10	21	15	2232-211-001-10	33	1
	13	1	2232-201-004-00	21	4		34	1
2232-124-240-00	12	8	2232-201-005-00	21	17	2232-211-003-00	33	5
	13	8	2232-201-006-00	21	14		34	5
2232-124-250-10	12	11	2232-201-007-10	21	20	2232-211-004-00	33	6
2232-125-001-00	14	6	2232-201-008-10	21	21		34	6
2232-125-003-00	14	26	2232-202-200-10	22	1	2232-211-005-00	33	7

Numerical Index

Part Code	Fig.	Key	Part Code	Fig.	Key	Part Code	Fig.	Key
2232-211-005-00	34	7	2232-222-260-00	39	2	2232-317-001-10	47	1
2232-211-006-20	33	8	2232-302-001-20	40	20	2232-320-700-00	49	1
	34	8	2232-302-002-10	40	14	2232-320-750-00	48	1
2232-211-007-00	33	16	2232-302-003-00	40	18	2232-321-200-20	50	1
	34	16	2232-302-006-00	40	9	2232-322-001-00	52	4
2232-211-013-00	33	26	2232-302-210-00	40	1		52	7
	34	26	2232-303-260-10	41	1	2232-322-200-10	52	1
2232-211-014-10	33	27	2232-304-200-10	42	4	2232-322-220-10	52	6
	34	27	2232-310-001-30	43	1	2232-322-230-20	52	9
2232-211-015-10	33	20		44	1	2232-322-250-10	52	2
	34	20	2232-310-002-10	43	16	2232-325-001-00	53	1
2232-211-016-00	33	31		44	16	2232-325-003-10	53	8
	34	31	2232-310-004-00	43	46	2232-325-200-00	53	5
2232-211-017-00	33	18	2232-310-005-00	43	12	2232-330-001-20	54	1
	34	18		44	12		55	1
2232-211-018-00	33	15	2232-310-006-00	43	4	2232-330-002-20	54	2
	34	15		44	4		55	2
2232-211-024-00	33	19	2232-310-007-00	43	8	2232-330-004-00	54	27
	34	19		44	8		55	26
2232-211-025-00	33	33	2232-310-008-00	43	33	2232-330-006-00	54	8
	34	33	2232-310-009-00	43	27	2232-330-012-00	54	32
2232-211-033-10	33	14	2232-310-011-00	43	41		55	31
	34	14	2232-310-012-10	43	42	2232-330-013-10	54	15
2232-211-034-00	33	17		44	39		55	14
	34	17	2232-310-013-10	43	35	2232-330-014-00	54	13
2232-211-035-00	33	13		44	31	2232-330-015-00	54	20
	34	13	2232-310-015-00	43	34		55	19
2232-211-037-00	33	4		44	29	2232-330-016-10	54	22
	34	4	2232-310-018-00	43	14		55	21
2232-211-200-10	33	29		44	14	2232-330-017-00	54	23
	34	29	2232-310-019-00	43	15		55	22
2232-211-210-00	33	3		44	15	2232-330-018-30	54	18
2232-212-001-00	35	3	2232-310-031-00	43	38		55	17
2232-212-003-00	35	16		44	34	2232-330-022-00	54	35
2232-212-200-10	35	1	2232-310-032-00	43	39		55	34
2232-212-210-00	35	8		44	35	2232-330-023-00	54	21
2232-212-220-00	35	14	2232-310-033-00	43	40		55	20
2232-213-002-10	36	2		44	36	2232-330-032-00	54	19
	36	7	2232-310-200-00	43	49		55	18
2232-213-200-20	36	6		44	46	2232-330-033-00	54	12
2232-213-210-10	36	11	2232-310-210-00	43	50		55	12
2232-213-220-30	36	1		44	47	2232-330-039-00	54	36
2232-215-210-00	37	1	2232-310-301-00	43	20		55	35
2232-215-230-10	37	4	2232-310-400-00	43	26	2232-330-041-10	54	44
2232-222-250-00	39	1	2232-316-200-00	45	1		55	43

Part Code	Fig.	Key	Part Code	Fig.	Key	Part Code	Fig.	Key
2232-330-042-00	54	17	2232-415-001-00	65	10	2232-508-021-00	76	19
	55	16		66	10		77	19
2232-330-043-00	54	48	2232-415-002-00	67	4	2232-508-280-00	76	20
	55	47		68	4		77	20
2232-330-045-00	54	56	2232-415-003-10	67	10	2232-512-001-10	79	1
	55	55		68	10	2232-512-004-00	79	15
2232-330-047-00	55	65	2232-415-200-00	67	1	2232-512-006-00	79	13
2232-330-048-00	54	66	2232-415-300-00	68	1		80	13
2232-330-053-00	54	14	2232-422-001-10	69	11	2232-514-220-00	82	1
	55	13	2232-422-002-00	69	19		83	1
2232-330-220-00	54	41	2232-422-025-00	54	67	2232-514-230-10	82	2
	55	40		55	66	2232-514-240-00	82	17
2232-330-250-00	54	49	2232-422-031-00	69	15		83	17
2232-330-260-10	54	52	2232-422-200-10	69	1	2232-514-250-00	82	11
2232-331-200-30	56	12	2232-422-210-00	69	6		83	11
2232-331-240-10	56	5	2232-422-230-10	69	12	2232-514-400-00	83	2
2232-331-250-20	56	1	2232-422-270-10	69	16	2232-517-001-00	85	8
2232-331-300-00	56	9	2232-435-001-00	70	3	2232-517-200-00	85	1
2232-331-302-00	56	10		71	3	2232-528-001-00	87	1
2232-336-001-00	57	20	2232-435-003-00	70	5	2232-528-004-00	87	2
2232-336-002-00	57	12		71	5	2232-532-200-00	88	1
2232-336-003-00	57	24	2232-435-004-00	70	11	2232-536-001-10	89	26
2232-336-005-00	57	9		71	11		90	27
2232-336-200-20	57	21	2232-435-200-10	70	1	2232-536-002-00	89	27
2232-336-250-20	57	1	2232-501-003-00	74	4		90	28
2232-336-260-00	57	3	2232-501-004-10	74	5	2232-536-003-10	89	7
2232-343-200-20	58	1	2232-501-032-00	74	2		90	7
2232-401-001-00	59	7	2232-501-200-40	74	1	2232-536-006-00	89	30
2232-407-200-20	60	1	2232-507-001-00	75	1		90	31
2232-407-210-00	60	3	2232-508-001-10	76	1	2232-536-007-00	89	5
2232-409-001-00	61	7		77	1		90	5
2232-409-004-10	61	10	2232-508-003-00	76	8	2232-536-008-00	89	6
2232-409-007-00	61	4		76	11		90	6
2232-409-200-00	61	1		77	8	2232-536-011-00	89	31
2232-411-001-00	62	3		77	11		90	32
	63	3	2232-508-006-20	76	7	2232-536-012-00	89	38
2232-411-200-00	62	1	2232-508-007-20	76	10		90	39
2232-411-300-00	63	1	2232-508-011-00	76	4	2232-536-250-00	89	12
2232-413-300-00	64	1		77	4		90	12
2232-414-200-20	65	1	2232-508-012-00	76	5	2232-536-290-00	89	24
2232-414-210-00	65	3		77	5		90	25
	66	3	2232-508-013-00	76	16	2232-536-300-00	89	1
	67	2		77	16		90	1
	68	2	2232-508-014-00	76	17	2232-536-330-00	89	11
2232-414-300-00	66	1		77	17		90	11

Numerical Index

Part Code	Fig.	Key	Part Code	Fig.	Key	Part Code	Fig.	Key
2232-537-200-40	92	1	2232-583-003-10	101	23	2232-607-011-00	107	24
2232-537-201-10	92	15	2232-583-004-00	101	39	2232-607-012-00	107	36
2232-537-203-10	92	8	2232-583-005-00	69	2	2232-607-014-00	107	42
2232-537-204-00	91	13		101	2	2232-607-015-00	107	43
	92	14	2232-583-008-00	101	29	2232-607-016-00	107	44
2232-537-220-20	91	14	2232-583-009-00	101	34	2232-607-017-10	107	46
	92	17	2232-583-016-00	101	21	2232-607-018-00	107	48
2232-537-240-00	92	20	2232-583-200-20	101	1	2232-607-019-10	107	15
2232-537-700-00	91	1	2232-583-210-10	101	9	2232-607-020-00	107	40
2232-537-960-00	92	18	2232-583-220-00	101	14	2232-607-027-00	107	13
2232-541-001-00	94	5	2232-583-240-00	101	17	2232-607-210-00	107	28
2232-541-200-00	94	1	2232-583-280-10	101	32	2232-607-230-00	107	54
2232-541-220-00	94	2	2232-601-200-10	103	1	2232-608-001-00	108	8
2232-541-230-00	95	2	2232-601-210-40	103	2	2232-608-005-20	108	4
2232-545-200-70	96	1	2232-603-002-00	101	20		109	2
2232-546-001-00	97	5		107	7	2232-608-006-00	108	1
2232-546-200-20	97	1		108	7	2232-608-007-00	108	9
2232-546-210-10	97	3		109	5	2232-608-008-00	108	14
2232-556-001-00	98	16		123	4	2232-608-009-00	108	17
2232-556-005-30	98	1		126	4	2232-608-010-00	108	11
2232-556-007-00	98	31	2232-603-003-00	101	19	2232-608-014-00	108	10
2232-556-011-10	98	23		107	6	2232-608-018-00	108	2
2232-556-012-10	98	24		108	6	2232-612-200-00	109	1
2232-556-013-10	98	25		109	4	2232-614-001-00	110	2
2232-556-022-00	98	26		123	3	2232-614-003-00	110	4
2232-556-023-10	98	6		126	5	2232-614-200-30	110	1
2232-556-024-00	98	10	2232-603-004-00	105	1	2232-614-210-00	110	5
2232-556-210-00	98	9	2232-603-200-10	105	2	2232-616-001-00	111	1
2232-556-230-00	40	16	2232-605-006-10	106	17	2232-616-200-00	111	4
	98	21	2232-605-007-00	106	1	2232-616-220-10	111	2
2232-556-260-00	98	19	2232-605-008-00	106	4	2232-616-230-00	111	5
2232-556-270-10	98	13	2232-605-010-00	106	15	2232-617-002-00	112	3
2232-556-280-10	98	14	2232-605-011-00	106	12	2232-618-004-00	113	16
2232-556-290-10	98	15	2232-605-012-00	106	10	2232-618-220-00	113	6
2232-556-320-10	98	5	2232-605-016-00	106	23	2232-619-002-00	114	2
2232-581-001-00	99	4	2232-605-210-30	106	3	2232-619-003-20	114	7
2232-581-200-10	99	1	2232-605-230-20	106	7	2232-619-240-00	114	1
2232-581-230-00	99	5	2232-605-240-00	106	6	2232-619-260-10	114	5
2232-582-003-00	100	11	2232-607-001-10	107	1	2232-645-006-10	115	38
2232-582-008-00	100	16	2232-607-002-00	107	2	2232-645-007-00	115	15
2232-582-009-00	100	9	2232-607-003-10	107	8		116	15
2232-582-011-00	100	17	2232-607-004-00	107	14	2232-645-011-10	115	9
2232-582-200-00	100	6	2232-607-005-20	107	19		116	9
2232-583-001-00	101	18	2232-607-008-00	107	22	2232-645-012-00	115	23
2232-583-002-10	101	40	2232-607-009-00	107	23	2232-645-013-00	115	12

Part Code	Fig.	Key	Part Code	Fig.	Key	Part Code	Fig.	Key
2232-645-013-00	116	12	2232-646-210-00	116	54	2232-675-201-00	120	1
2232-645-014-20	115	26	2232-651-001-00	117	15		120	31
	116	26	2232-651-002-00	117	4	2232-675-202-00	120	2
2232-645-015-10	115	7	2232-651-003-00	117	7		120	32
	116	7	2232-652-210-00	117	1	2232-675-204-00	120	14
2232-645-016-00	115	28	2232-652-230-00	117	2		120	44
	116	28	2232-655-001-00	118	5	2232-675-205-00	120	8
2232-645-017-00	115	27	2232-655-002-00	118	2		120	38
	116	27	2232-655-003-00	118	6	2232-675-207-00	120	20
2232-645-018-00	115	13	2232-655-004-00	118	12		120	50
	116	13	2232-655-006-00	118	15	2232-675-209-00	120	27
2232-645-019-10	115	64	2232-655-007-00	118	16		120	57
	116	63	2232-655-008-00	118	4	2232-675-211-00	120	29
2232-645-021-00	117	22	2232-655-009-00	118	23		120	59
	118	9	2232-655-010-10	118	25	2232-675-212-10	120	9
	118	17	2232-655-011-10	118	30		120	39
	118	22	2232-655-012-00	118	27	2232-675-213-00	120	4
	118	28	2232-655-015-00	118	13		120	34
	118	33	2232-655-016-00	118	14	2232-675-214-00	120	28
	119	18	2232-655-260-10	118	21	2232-675-215-00	120	58
	119	33	2232-655-500-10	147	2	2232-675-217-00	120	15
	120	73	2232-656-005-10	118	1		120	45
2232-645-022-00	115	2	2232-656-020-00	118	18	2232-675-218-00	120	25
	116	2	2232-656-021-00	118	35		120	55
	119	16	2232-656-022-00	118	32	2232-675-220-00	120	7
	120	61	2232-656-400-00	118	31		120	37
2232-645-023-00	115	14	2232-665-001-00	119	12	2232-675-230-00	120	72
	116	14	2232-665-005-10	119	31	2232-676-001-10	120	62
	118	36	2232-665-500-10	118	7	2232-676-003-00	120	63
	118	45	2232-665-510-00	119	28	2232-676-031-00	120	76
	119	13	2232-666-001-20	119	32	2232-676-032-00	120	78
2232-645-025-00	115	29	2232-666-003-00	119	35	2232-676-210-00	115	50
	115	36	2232-666-250-30	119	1	2232-676-300-10	120	74
	115	47	2232-672-007-00	122	3	2232-676-310-10	120	75
	116	29	2232-672-008-10	122	4	2232-676-510-00	120	86
2232-645-026-00	115	25	2232-675-001-00	120	80	2232-676-520-00	120	84
	115	37	2232-675-002-00	120	81	2232-676-530-00	120	85
2232-645-310-00	115	58	2232-675-004-00	120	64	2232-685-002-00	121	7
	116	57	2232-675-006-00	120	66	2232-686-001-10	154	1
2232-645-320-40	115	1	2232-675-007-00	120	68	2232-686-002-10	154	2
2232-645-330-00	115	35	2232-675-008-00	120	67	2232-686-004-10	154	19
2232-645-350-00	115	43	2232-675-021-00	122	11	2232-686-009-10	154	13
2232-645-420-00	115	32	2232-675-022-00	122	12	2232-686-010-00	154	34
	116	32	2232-675-023-00	122	13	2232-686-011-10	154	5
2232-646-210-00	115	55	2232-675-024-00	122	14	2232-686-012-10	154	22

Numerical Index

Part Code	Fig.	Key	Part Code	Fig.	Key	Part Code	Fig.	Key
2232-686-013-20	154	20	2232-702-001-00	124	1	2232-801-003-00	133	17
2232-686-016-00	154	11	2232-702-002-00	124	2	2232-801-005-00	133	32
2232-686-017-20	154	23	2232-702-003-00	107	51	2232-801-006-00	133	23
2232-686-019-20	154	24		108	3	2232-801-220-00	133	12
2232-686-020-30	154	25	2232-702-007-00	124	4	2232-801-250-00	133	1
2232-686-021-30	154	26	2232-703-200-00	125	2	2232-801-251-00	133	11
2232-686-023-10	154	27	2232-703-210-00	125	1	2232-801-260-00	133	5
2232-686-210-10	121	2	2232-705-001-10	126	12	2232-802-001-00	134	1
2232-686-250-40	121	1	2232-705-002-10	126	13	2232-802-002-00	134	2
2232-686-260-10	154	3	2232-705-004-00	126	15	2232-802-051-00	135	6
2232-686-300-10	117	21	2232-705-200-30	126	1	2232-802-052-00	135	7
2232-691-054-00	122	23	2232-705-220-30	126	2	2232-803-001-00	136	6
2232-691-055-00	122	25	2232-705-230-10	126	9	2232-803-003-00	136	4
2232-691-057-10	122	6	2232-705-240-20	126	6	2232-803-210-00	136	3
2232-692-004-00	122	16	2232-705-250-00	126	3	2232-803-220-00	136	2
2232-692-005-00	122	17	2232-706-200-00	127	1	2232-803-320-00	136	1
2232-692-006-10	122	9	2232-706-210-00	127	4	2232-804-001-00	137	7
2232-692-220-20	119	14	2232-710-012-00	128	1	2232-804-400-00	137	4
2232-692-250-00	119	15	2232-710-017-10	128	6	2232-805-001-00	138	16
2232-692-260-00	119	17	2232-710-260-00	128	2	2232-805-002-00	138	17
2232-696-002-00	122	8	2232-711-001-00	129	25	2232-805-003-00	138	21
2232-696-100-10	118	42	2232-711-002-00	129	26	2232-805-004-00	138	43
2232-696-110-10	118	43	2232-711-003-00	129	17	2232-805-005-10	138	41
2232-696-120-10	118	44	2232-711-004-00	129	18	2232-805-006-00	138	12
2232-696-300-00	122	15	2232-711-005-00	129	3	2232-805-007-00	138	44
2232-696-400-00	122	2	2232-711-007-00	129	9	2232-805-008-00	138	11
2232-701-001-10	123	1	2232-711-008-00	129	10	2232-805-010-10	138	33
2232-701-002-00	123	19	2232-711-011-00	129	22	2232-805-011-10	138	7
2232-701-003-00	123	34	2232-711-013-00	129	27	2232-805-013-20	138	2
2232-701-004-00	123	32	2232-711-014-00	129	8	2232-805-014-20	138	49
2232-701-006-10	123	27	2232-711-200-10	129	11	2232-805-020-00	138	13
2232-701-009-00	123	15	2232-711-210-10	129	12	2232-805-021-00	138	3
2232-701-011-00	123	7	2232-711-220-40	129	14	2232-805-022-10	138	4
2232-701-012-00	123	47	2232-711-230-40	129	15	2232-805-023-00	138	45
2232-701-013-00	123	48	2232-711-240-20	129	1	2232-805-024-00	138	32
2232-701-016-00	123	18	2232-711-250-20	129	2	2232-805-025-10	138	42
2232-701-017-00	123	26	2232-711-270-00	17	22	2232-805-028-00	138	6
2232-701-020-00	123	17		18	22	2232-805-029-00	138	5
2232-701-022-30	123	33		129	20	2232-805-051-10	138	46
2232-701-023-00	123	16	2232-713-002-00	130	3	2232-805-056-00	138	47
2232-701-024-00	123	44	2232-713-200-10	130	1	2232-805-057-20	138	48
2232-701-042-00	123	8	2232-713-210-10	130	2	2232-805-200-10	138	1
2232-701-043-00	123	9	2232-738-304-00	152	28	2232-805-210-00	138	8
2232-701-220-20	123	42		153	28	2232-805-220-20	138	30
2232-701-270-00	123	46	2232-801-001-00	133	13	2232-805-230-20	138	31

Part Code	Fig.	Key	Part Code	Fig.	Key	Part Code	Fig.	Key
2232-806-001-10	139	1	2232-926-053-00	146	4	2233-310-005-10	44	30
2232-807-001-00	140	3	2232-926-054-00	146	5	2233-310-007-00	44	37
2232-807-002-00	140	6	2232-926-055-00	146	6	2233-310-008-00	44	28
2232-807-200-00	140	1	2232-926-056-00	146	9	2233-310-011-00	44	21
2232-901-031-00	141	15	2232-926-057-00	146	10	2233-310-013-00	44	26
	142	14	2232-926-058-00	146	12	2233-310-014-00	44	38
2232-901-032-00	141	16	2232-926-059-00	146	13	2233-310-400-00	44	20
	142	15	2232-971-001-00	148	1	2233-316-200-10	46	1
2232-901-033-00	141	17	2232-971-004-10	148	6	2233-321-200-00	51	1
	142	16		149	6	2233-330-005-10	55	8
2232-912-003-00	143	1	2233-101-004-00	4	12	2233-330-051-00	54	45
	144	1	2233-101-005-00	4	13		55	44
2232-912-004-00	143	2	2233-101-006-00	4	23	2233-330-200-10	55	48
	144	2	2233-101-007-00	2	18	2233-330-230-00	55	51
2232-912-006-00	143	5	2233-101-500-00	2	14	2233-435-200-00	71	1
	144	6	2233-102-006-00	4	36	2233-508-001-00	77	7
2232-912-021-00	143	6	2233-102-220-00	4	8	2233-508-002-00	77	10
	144	7	2233-102-230-00	4	7	2233-509-280-00	78	1
2232-912-023-00	12	4	2233-102-250-00	4	17	2233-512-001-00	80	1
	13	4	2233-102-350-00	4	35	2233-524-200-00	86	1
2232-912-025-00	3	47	2233-105-003-00	8	1	2233-537-230-00	91	15
2232-912-026-00	3	48	2233-105-004-00	8	3	2233-537-231-00	91	18
2232-912-027-00	143	3	2233-106-200-00	9	4	2233-541-001-00	95	5
	144	4	2233-106-210-00	9	1	2233-541-300-00	95	1
2232-912-028-00	90	24	2233-124-004-00	13	21	2233-581-001-00	54	61
2232-912-041-00	90	8	2233-124-005-00	13	23		55	60
2232-912-042-00	89	8	2233-124-300-00	13	11	2233-581-002-00	99	14
2232-912-043-00	89	9	2233-131-002-00	16	10	2233-581-200-00	99	11
	90	9	2233-131-004-00	16	12	2233-581-210-00	99	12
2232-912-044-00	89	10	2233-131-006-00	16	24	2233-648-001-00	116	25
	90	10	2233-131-007-00	16	16		116	36
2232-912-045-00	89	13	2233-131-200-00	16	18		116	46
	90	13	2233-132-200-00	18	29	2233-648-006-00	116	37
2232-912-046-00	143	7	2233-137-008-00	20	1	2233-648-012-00	116	23
	144	8	2233-137-200-00	20	4	2233-648-320-00	116	1
2232-912-047-00	143	9	2233-137-220-00	20	2	2233-648-330-00	116	35
	144	10	2233-202-200-00	23	1	2233-648-350-00	116	42
2232-912-048-00	143	10	2233-203-200-00	25	1	2233-678-004-00	120	88
	144	11	2233-204-001-00	27	4	2233-678-200-00	120	87
2232-925-021-00	145	1	2233-207-250-00	29	5	2233-678-220-00	116	49
2232-925-022-00	145	2	2233-209-001-00	32	8	2233-912-002-00	144	3
2232-926-009-00	146	2	2233-211-200-00	34	3	2233-971-001-00	149	1
2232-926-011-00	146	11	2233-222-200-10	38	1	2500-907-017-00	10	10
2232-926-051-00	146	1	2233-222-210-10	38	2	2512-501-240-00	59	3
2232-926-052-00	146	3	2233-310-002-00	44	43	2512-665-220-00	89	14

Numerical Index

Part Code	Fig.	Key
2512-665-220-00	90	14
2513-801-042-00	117	8
2515-665-210-00	89	37
	90	38
2703-501-006-00	152	29
	153	29
2703-501-008-00	152	31
	153	31
2798-102-002-00	82	9
	83	9
3103-210-051-00	14	2
3505-704-003-00	85	7
	111	8
	128	5
3533-306-001-00	84	6
3533-901-012-00	74	3
3555-404-008-00	107	21
3560-203-002-00	17	34
	18	33
3560-503-302-00	2	21
	3	12
	54	46
	55	45
	57	17
	123	45
	129	5
	138	40
3565-403-008-00	107	20
3621-211-002-00	7	6
3623-150-003-10	2	9
3623-263-001-00	91	22
3632-360-036-00	125	11
3640-260-200-30	4	11
	94	6
	95	6
	125	4
3640-547-007-00	123	2
3646-102-011-10	120	65
3650-212-001-00	12	16
	13	16
3650-261-221-00	91	10
	92	11
3650-375-200-00	61	9
3652-273-002-00	89	17
	90	17
3656-223-011-00	128	4
3656-260-200-30	95	4
3656-302-009-10	2	10
3659-301-001-00	2	15
3659-836-002-00	97	7
3676-374-310-00	61	8
3737-154-003-00	79	12
	80	12
3737-172-011-00	16	8
3737-211-007-00	123	25
3737-314-003-00	9	8
3740-314-017-00	53	6
	123	5
3747-155-013-10	12	15
	13	15
3747-342-002-00	69	7
	101	10
3750-231-013-00	131	2
	132	2
3768-185-014-10	71	12
3768-185-022-10	60	5
3805-301-320-00	4	25
3805-301-321-00	4	29
3805-354-280-00	59	5
3807-836-350-00	12	29
	13	29
	14	12
	36	13
	118	37
	140	7
3807-836-400-00	12	30
	13	30
	14	13
	36	14
	118	38
	140	8
3817-493-005-00	98	11
3821-262-202-00	91	4
	92	4
3821-262-204-00	91	5
	92	5
3822-330-601-00	3	21
3824-247-202-00	91	3
3824-247-203-00	91	6
3827-270-203-00	92	6
3829-260-303-00	91	16
3829-905-001-00	141	9
3829-905-052-00	146	8
3830-311-210-00	10	20
	11	16
3838-620-002-00	36	9
3841-277-300-00	91	11
	92	12
3842-247-202-00	92	3
3843-271-210-00	89	32
	90	33
3849-270-402-00	89	19
	90	19
3849-270-403-00	89	20
	90	20
3864-225-001-00	12	14
	13	14
3885-741-235-00	76	3
	77	3
3888-218-001-00	98	4
	129	21
3888-281-200-00	28	16
	29	17
3888-726-001-00	17	23
	18	23
	69	5
3888-726-200-00	69	4
	98	3
	129	19
3908-170-020-00	10	2
	11	2
	19	7
	20	6
	76	15
	77	15
	81	7
	82	7
	83	7
3922-420-211-00	124	3
3924-312-003-00	115	24
	116	24
4106-102-028-00	2	23
	9	6
	69	17
4132-303-003-00	3	29

Numerical Index

Part Code	Fig.	Key	Part Code	Fig.	Key	Part Code	Fig.	Key
4512-106-005-00	86	4	8841-718-002-00	154	6	8843-624-004-00	119	30
6219-755-001-00	10	21	8842-505-007-00	118	3	8843-624-205-00	119	20
	11	17	8842-505-019-00	118	11	8843-704-004-00	115	46
6221-408-003-00	4	33	8842-505-032-00	118	10		116	45
6221-408-007-00	4	32	8842-505-035-00	118	8	8843-704-005-00	115	52
6221-408-008-00	4	26	8842-515-015-00	118	19		116	51
6221-408-009-00	4	27	8842-515-022-00	120	69	8843-704-251-00	115	51
6221-408-010-00	4	28		138	24		116	50
6221-408-011-00	4	30	8842-535-250-10	117	10	8844-101-001-00	5	17
6221-408-013-00	4	31	8842-605-004-10	121	6	8844-101-002-10	5	15
7827-205-010-00	101	28	8842-625-004-00	119	27	8844-405-028-00	115	20
7932-201-002-00	43	28	8842-625-400-20	119	19		116	20
	43	29	8842-625-404-00	119	24	8844-535-002-00	117	6
	44	22	8842-625-405-00	119	25	8844-725-310-10	122	7
	44	23	8842-625-406-00	119	26	8844-726-220-00	122	1
7954-205-101-00	21	7	8842-625-408-00	119	22	8844-745-013-00	122	22
7957-405-003-00	113	2	8842-625-409-00	119	21	8844-746-007-00	122	29
	119	29	8842-705-018-00	120	70	8844-906-006-00	146	14
8595-201-025-00	33	25	8842-705-032-00	120	22	J061-120-032-00	3	31
	34	25		120	52		61	6
	40	13	8842-705-208-00	120	24	J061-123-035-00	4	15
8664-305-201-00	26	3		120	54	J061-132-050-00	108	15
	27	3	8842-705-211-10	120	26	J061-144-060-00	108	16
8836-102-002-00	5	4		120	56	J061-236-044-00	4	16
8836-103-002-00	5	10	8842-705-214-10	120	10	J061-249-060-00	4	24
8836-502-203-00	117	20		120	40	J062-104-111-00	21	23
8836-506-005-00	119	3	8842-705-215-00	120	12	J062-111-120-00	3	14
8836-508-001-00	119	2		120	42	J062-119-126-00	61	11
8836-601-011-00	117	5	8842-705-216-00	120	13	J062-126-134-00	10	17
8836-602-005-10	122	24		120	43		11	13
8836-602-006-10	122	26	8842-705-218-00	120	17		11	20
8836-703-055-00	98	7		120	47	J062-138-148-00	10	23
	115	11	8842-705-219-00	120	19	J062-147-159-00	10	13
	116	11		120	49	K200-269-000-00	70	2
8836-706-006-10	122	5	8842-705-223-00	120	3		71	2
8836-730-215-00	154	9		120	33	K250-083-000-00	70	13
	154	33	8842-705-224-00	120	16		71	13
8836-730-216-00	154	18		120	46	K270-012-103-00	64	4
8841-101-300-00	5	6	8842-905-042-00	146	7	K275-001-003-00	150	36
8841-511-201-00	92	16	8842-919-002-10	147	1		151	26
8841-536-011-00	120	23	8843-404-006-00	115	19	K500-001-023-00	151	22
	120	53		116	19	K510-001-007-00	150	12
8841-536-018-00	120	91	8843-404-009-00	115	18		151	5
8841-716-009-00	154	7		116	18	K510-001-010-00	151	8
8841-716-011-00	154	17	8843-514-300-00	118	20	K510-001-011-00	151	9

Numerical Index

Part Code	Fig.	Key
K510-001-013-20	151	11
K510-001-015-00	151	13
K510-001-016-00	151	15
K510-001-017-00	150	27
	151	16
K510-001-018-00	150	28
	151	17
K510-001-019-00	151	18
K510-001-020-00	150	29
	151	19
K510-001-024-00	151	23
K510-001-026-00	150	34
	151	24
K510-001-029-00	150	35
	151	25
K510-001-031-00	150	43
	151	33
K510-001-034-00	151	42
K510-001-036-00	150	49
	151	40
K510-001-039-00	151	32
K510-003-021-00	150	30
	151	20
K510-003-022-00	150	31
	151	21
K510-003-037-00	150	25
	151	43
K510-006-008-00	151	6
K510-006-012-30	151	10
K510-006-014-00	150	23
	151	12
K510-006-015-00	150	24
K510-010-006-10	151	4
K510-010-009-00	151	7
K510-017-001-00	150	1
K510-017-047-00	150	46
	151	36
K510-017-048-00	150	47
	151	37
K510-019-005-10	151	3
K510-021-000-20	15	1
K510-021-004-00	150	2
K510-021-006-00	150	11
K510-021-010-00	150	13
K510-021-011-00	150	14

Part Code	Fig.	Key
K510-021-012-00	150	16
K510-021-013-00	150	20
K510-021-016-10	150	26
K510-021-023-00	150	32
K510-021-024-00	150	33
K510-021-030-00	150	42
K510-021-300-00	150	3
K510-021-301-00	150	4
K510-021-302-00	150	5
K510-021-303-00	150	6
K510-021-304-00	150	7
K510-021-305-00	150	8
K510-021-306-00	150	9
K510-021-307-00	150	10
K510-021-600-00	150	15
K510-021-610-00	150	19
K510-022-000-00	16	1
K510-022-001-00	151	1
K510-022-004-00	151	2
P112-711-201-00	60	2
	65	2
	66	2
V111-163-001-60	12	31
	13	31
	14	14
	36	15
	118	39
	140	9
V111-163-002-00	107	31
V111-164-001-20	154	36
V111-703-000-60	154	28
V111-703-001-60	117	11
V111-704-001-00	120	5
	120	35
V111-705-001-00	115	16
	116	16
	119	8
V111-706-001-60	121	5
V112-706-002-00	136	16
V120-265-001-60	28	17
	29	18
V120-364-000-80	133	28
V120-364-001-00	12	20
	13	20
	17	6

Part Code	Fig.	Key
V120-364-001-00	18	6
	40	17
	67	9
	68	9
	69	10
	98	22
	101	13
	106	14
	113	15
	129	24
V120-364-001-20	133	29
V120-365-001-20	3	41
V120-365-002-50	89	43
	90	44
V120-366-001-60	75	2
	89	29
	90	30
V120-366-002-50	152	3
	153	3
V120-366-003-00	152	24
	153	24
V120-368-002-00	114	8
V120-376-001-20	12	3
	13	3
V180-446-001-20	115	49
	116	48
V195-102-504-40	133	27
V195-164-012-10	85	3
V195-164-016-10	133	31
V200-260-501-20	101	5
	113	10
V200-260-601-20	97	8
	138	9
	138	37
V200-260-602-00	12	26
	13	26
V200-260-602-50	12	27
	13	27
V200-260-603-50	138	14
	138	36
V200-700-601-20	2	19
	3	10
V200-700-601-60	122	27
V200-700-602-50	118	46
V200-700-603-00	152	42

Numerical Index

Part Code	Fig.	Key
V200-700-603-00	153	42
V200-700-803-00	122	18
V201-260-803-50	101	37
V201-260-804-00	87	5
V201-260-805-00	15	17
	17	2
	18	2
	57	4
V201-260-807-00	86	2
V201-260-808-00	89	2
	90	2
V201-261-003-50	5	7
V201-261-007-50	15	5
	16	5
V201-261-014-00	15	4
	16	4
V201-360-803-00	84	3
V201-360-803-50	40	8
V201-361-002-50	43	18
	44	18
V201-361-003-00	43	21
	82	12
	83	12
	103	6
V201-361-003-50	40	21
V201-361-004-0B	54	59
	55	58
V201-361-202-50	45	2
	46	2
V201-700-801-20	115	3
	116	3
V203-461-002-20	2	6
V203-461-002-50	9	2
V210-260-601-20	99	13
V210-260-601-60	54	47
	55	46
	108	12
	133	24
	133	33
V210-260-602-00	81	10
V210-360-601-20	3	34
	4	34
	101	41
	114	3
V210-360-601-60	92	21

Part Code	Fig.	Key
V210-360-601-60	107	55
V210-360-602-00	17	8
	18	8
	89	40
	89	46
	90	41
	90	47
	91	20
	91	26
	92	26
	92	31
	137	10
	137	12
	137	14
	138	39
V210-360-602-50	133	22
V210-360-603-00	5	16
	96	2
	107	53
	137	6
	137	16
V210-560-601-20	102	4
V211-260-801-60	3	16
	3	39
	5	14
	9	7
	40	19
	56	13
	123	30
	123	38
V211-260-802-00	2	22
	4	10
	4	37
	36	12
	56	4
	60	4
	61	3
	65	4
	66	4
	67	3
	68	3
V211-260-802-50	8	2
	16	19
	54	28
	55	27

Part Code	Fig.	Key
V211-260-802-50	70	19
	71	19
	107	3
	136	9
V211-260-803-00	16	15
V211-260-803-50	125	3
V211-260-804-00	28	15
	29	15
V211-260-805-50	70	8
	71	8
V211-261-003-00	72	4
	73	4
V211-360-801-60	98	20
	98	32
V211-360-802-00	3	4
	3	24
	12	9
	12	13
	12	25
	13	9
	13	13
	13	25
	14	7
	17	30
	38	6
	39	6
	52	12
	57	22
	58	2
	69	3
	79	3
	79	6
	79	14
	80	3
	80	6
	80	14
	82	18
	83	18
	84	10
	100	7
	101	3
	101	22
	101	30
	101	33
	110	3

Numerical Index

Part Code	Fig.	Key
V211-360-802-00	111	3
	111	6
	119	6
	123	43
	126	10
	126	16
	127	3
	127	6
	128	3
	129	13
	136	5
	136	7
V211-360-802-50	3	1
	110	7
	133	14
V211-360-803-00	78	2
	82	20
	83	20
	126	11
V211-360-804-50	98	2
V211-361-002-00	126	7
V211-361-002-50	43	23
	82	14
	83	14
	106	2
V211-560-802-00	43	37
	44	33
V211-560-802-50	30	6
	99	7
	115	65
	116	64
V211-560-803-00	21	3
	43	48
	44	45
	82	3
	83	3
V211-560-803-50	21	16
V211-560-804-50	54	5
	55	5
V220-540-802-50	70	20
	71	20
V220-541-003-50	150	50
	151	41
V231-360-802-00	2	3
V251-341-202-50	45	4

Part Code	Fig.	Key
V251-341-202-50	46	4
V301-260-004-00	10	4
	11	4
V301-260-006-00	12	28
	13	28
	57	18
	67	11
	68	11
	113	17
	137	9
V301-700-003-00	117	14
	119	5
	119	23
	154	32
V301-700-004-00	154	16
	154	39
V301-700-006-00	3	2
	115	48
	116	47
	119	34
	152	43
	153	43
V304-260-008-00	9	12
	12	7
	13	7
	14	5
	14	19
	14	22
	17	13
	17	16
	18	13
	18	16
	42	2
	69	18
	86	3
	101	38
	104	2
	106	21
	112	4
	115	63
	116	62
	120	89
	124	5
	135	4
V304-260-010-00	6	3

Part Code	Fig.	Key
V304-260-010-00	108	20
V304-260-012-00	2	11
	38	4
	39	4
V304-260-014-00	12	18
	13	18
	62	4
	63	4
V304-460-008-00	40	7
	84	5
	131	6
	132	6
V304-460-010-00	40	22
V304-460-012-00	45	5
	46	5
V304-700-008-00	2	16
	115	34
	115	41
	116	34
	116	40
	122	21
	152	51
	153	51
V334-260-010-00	15	13
	16	14
V335-260-008-00	117	19
V335-260-010-00	41	2
V350-160-004-00	93	2
V350-160-005-00	88	4
V360-260-005-00	3	42
	89	44
	90	45
V360-260-006-00	10	19
	11	15
	12	22
	13	22
	17	10
	18	10
	89	41
	89	47
	90	42
	90	48
	91	27
	92	25
	97	2

Numerical Index

Part Code	Fig.	Key
V360-260-006-00	97	4
	106	16
	133	25
	133	34
	136	12
	138	10
	138	15
	138	38
	140	12
V361-260-006-00	79	11
	80	11
V362-260-008-00	3	5
	3	26
	3	38
	3	40
	4	38
	10	22
	11	18
	12	10
	13	10
	16	23
	17	4
	18	4
	56	14
	57	6
	79	4
	80	4
	82	19
	82	21
	83	19
	83	21
	84	9
	84	11
	85	5
	85	9
	94	3
	95	3
	106	24
	112	5
	126	14
	127	7
	129	28
	136	10
V363-260-010-00	43	22
	54	62
V363-260-010-00	55	61
	82	13
	83	13
	113	8
V401-160-003-00	12	32
	13	32
	14	15
	36	16
	118	40
	140	11
V401-160-004-00	10	5
	11	5
V401-160-005-00	101	6
	113	11
V401-160-006-00	67	12
	68	12
	113	18
V401-160-008-00	5	5
	5	11
	14	23
	15	18
	16	17
	17	17
	18	17
	21	5
	21	18
	42	3
	70	21
	71	21
	104	3
	115	62
	116	61
	117	18
	131	5
	132	5
	135	3
V401-160-010-00	2	7
	5	2
	5	8
	6	5
	9	3
	15	6
	15	12
	16	6
	16	13
V401-160-010-00	41	4
	43	19
	43	24
	44	19
	54	60
	55	59
	82	15
	83	15
	103	7
	108	19
V401-160-012-00	2	12
	45	3
	46	3
	72	6
	73	6
V401-700-003-00	117	13
	119	4
	154	29
V401-700-004-00	115	21
	116	21
	120	6
	120	21
	120	36
	120	51
	154	15
	154	38
V401-700-005-00	115	17
	116	17
	117	9
	119	9
V401-700-006-00	2	20
	3	3
	3	11
	118	47
	121	4
V401-700-008-00	2	17
	115	4
	115	33
	115	40
	116	4
	116	33
	116	39
	122	19
	152	50
	153	50

Numerical Index

Part Code	Fig.	Key
V402-160-012-00	54	57
	55	56
V410-260-010-00	108	18
V411-260-003-00	12	33
	13	33
	14	16
	36	17
	118	41
	140	10
V411-260-004-00	10	6
	11	6
	74	7
	133	9
	133	20
V411-260-006-00	52	14
	54	69
	55	68
	65	6
	66	6
	98	30
	99	10
	137	18
	140	4
V411-260-008-00	12	6
	13	6
	14	4
	15	19
	17	3
	17	35
	18	3
	18	34
	19	6
	20	5
	42	5
	57	5
	65	7
	66	7
	84	4
	87	6
	89	3
	90	3
	99	2
	130	6
	138	50
V411-260-010-00	2	8

Part Code	Fig.	Key
V411-260-010-00	5	9
	6	4
	43	25
	82	16
	83	16
	103	4
	113	4
	115	44
	116	43
V411-260-012-00	2	13
	138	23
V411-260-014-00	12	17
	13	17
V411-260-016-00	17	26
	18	26
V411-260-018-00	65	11
	66	11
	67	5
	68	5
V411-700-003-00	117	12
	154	10
	154	30
	154	35
V411-700-004-00	115	22
	116	22
	154	8
	154	14
	154	37
V411-700-005-00	119	10
V411-700-006-00	118	48
	120	83
V411-700-008-00	115	5
	115	39
	116	5
	116	38
	122	20
V411-700-010-00	115	30
	115	42
	116	30
	116	41
V500-162-002-00	99	3
V500-162-501-50	36	3
	36	8
	98	28
	138	51

Part Code	Fig.	Key
V500-162-502-50	41	3
V500-163-001-50	69	20
V500-163-002-00	14	11
	14	27
	17	21
	18	21
	19	9
	20	8
	57	2
	57	8
	57	11
	57	23
	65	9
	66	9
	69	21
	106	5
	106	18
	113	5
	130	5
V500-163-002-50	82	10
	83	10
V500-163-003-50	65	12
	66	12
	67	6
	68	6
V500-163-004-00	56	6
	81	13
V500-164-002-50	36	5
	36	10
V522-100-601-60	107	4
	123	6
V522-100-801-80	15	7
	16	7
	21	6
	21	19
	28	14
	29	14
	30	7
	43	2
	44	2
	54	3
	54	29
	54	63
	55	3
	55	28

Part Code	Fig.	Key
V522-100-801-80	55	62
V523-100-300-80	152	32
	153	32
V600-110-600-10	107	18
	107	47
V600-110-600-20	152	13
	153	13
V600-110-600-30	107	37
	123	22
V600-110-600-50	107	49
	152	5
	153	5
V600-110-600-60	33	12
	34	12
	107	16
V600-110-600-70	40	2
V600-110-620-10	54	24
	55	23
	152	12
	153	12
V600-110-620-20	102	8
	102	30
V600-110-620-30	31	6
	32	6
	40	3
	53	2
	54	25
	55	24
	102	10
	102	16
	102	21
	102	34
	102	37
	123	35
V600-110-620-40	24	2
	25	2
	28	11
	29	11
	31	2
	32	2
	54	30
	54	37
	54	50
	55	29
	55	36

Part Code	Fig.	Key
V600-110-620-40	107	9
	123	11
	150	17
	150	21
	151	14
V600-110-620-50	22	2
	23	2
	28	8
	29	8
	33	21
	34	21
	43	5
	44	5
	54	9
V600-110-620-60	26	9
	27	9
	43	45
	44	42
	54	33
	54	53
	55	32
	55	52
V600-110-620-70	30	9
	43	31
	44	25
V600-110-620-80	54	54
	55	53
V600-110-620-90	43	9
	43	13
	44	9
	44	13
V600-110-630-20	22	3
	23	3
	33	2
	34	2
V600-110-630-30	26	8
	27	8
	31	5
	32	5
	33	9
	34	9
	40	10
V600-110-630-40	54	51
	55	50
V600-110-630-50	24	3

Part Code	Fig.	Key
V600-110-630-50	25	3
	33	22
	34	22
	40	11
	43	43
	44	40
V600-110-630-60	28	2
	29	2
V600-150-600-20	108	5
	115	57
	116	56
V600-150-600-60	16	20
	103	5
V600-150-600-70	101	25
V600-150-620-20	9	5
V600-150-620-40	52	10
V682-200-001-00	35	7
	35	13
	35	19
	107	35
V704-140-012-00	98	8
	101	36
	123	49
	129	16
V704-140-014-00	30	8
V704-140-015-00	7	7
	9	9
	69	8
	98	12
	101	11
V704-140-017-00	17	27
	18	27
	102	12
	102	22
	102	32
	102	39
	150	48
	151	39
V704-140-018-00	107	27
V704-140-020-00	28	12
	29	12
	54	39
	55	38
	107	11
	123	10

Numerical Index

Part Code	Fig.	Key
V704-140-020-00	150	18
	150	22
	151	29
V704-140-022-00	31	9
	32	9
V704-140-025-00	54	11
	55	11
	115	53
	116	52
	130	7
V704-140-028-00	54	16
	55	15
V704-140-032-00	50	2
	51	2
V704-140-035-00	101	26
V705-140-025-00	54	42
	55	41
V705-140-030-00	150	41
	151	38
V705-140-032-00	151	31
V705-140-035-00	123	24
V705-140-040-00	40	4
	53	3
	102	11
	102	17
	102	23
	102	35
	102	38
V705-140-047-00	33	10
	34	10
	52	11
	54	38
	55	37
	107	10
	123	14
	150	40
	151	30
V705-140-052-00	33	23
	34	23
	43	6
	44	6
	54	10
	55	10
V706-140-045-00	43	10
	44	10
V707-140-055-00	16	21
	107	17
V707-140-062-00	33	24
	34	24
	40	12
	54	34
	55	33
	101	27
V707-140-072-00	28	3
	29	3
	43	30
	44	24
V707-140-085-00	43	11
	44	11
V710-140-008-00	98	17
V720-101-900-80	21	12
	21	22
V720-101-901-00	35	5
	35	11
	35	17
	107	32
	123	41
V720-102-401-50	15	8
	16	9
V720-103-502-80	152	40
	153	40
V720-103-503-00	61	2
V720-103-503-90	15	2
	16	2
	59	2
V720-111-900-60	70	7
	71	7
V720-112-401-10	64	2
	70	17
	71	17
	72	8
	72	10
	73	8
	73	10
	150	38
	151	28
V720-112-401-40	59	6
	70	6
	71	6
	150	37
V720-112-401-40	151	27
V720-112-401-60	70	14
	71	14
V720-112-401-80	59	4
	70	16
	71	16
V721-103-103-50	15	3
	16	3
V721-103-108-50	43	17
	44	17
V723-101-501-50	30	18
V740-117-300-60	123	37
V744-112-220-70	33	34
	34	34
	35	2
	35	9
	35	15
	40	15
	107	29
V744-112-250-70	54	43
	55	42
V744-115-300-70	120	18
	120	48
V744-117-300-70	107	38
V744-117-350-70	54	26
	55	25
	123	23
V744-117-400-80	53	4
V744-120-300-70	120	11
	120	41
V744-120-400-70	31	3
	32	3
V744-120-470-70	28	13
	29	13
	107	12
	123	12
	150	44
	151	34
V744-125-350-70	26	13
	27	13
	33	30
	34	30
	37	2
	115	54
	116	53

Numerical Index

Part Code	Fig.	Key	Part Code	Fig.	Key	Part Code	Fig.	Key
V744-125-450-70	107	50						
V744-125-470-80	28	9						
	29	9						
V744-125-521-00	43	7						
	44	7						
V760-150-000-00	52	13						
	65	5						
	66	5						
	99	9						
V780-140-000-1T	70	15						
	71	15						
V780-140-000-2T	70	9						
	71	9						
V780-140-000-4T	150	39						
V780-140-000-6B	21	13						
V781-160-000-4B	43	32						
	44	27						
	54	7						
	55	7						
V781-160-000-6B	21	10						
V783-160-602-00	70	18						
	71	18						
W296-134-008-60	74	6						

Alpabetical Index

5402-097-110-00

Description	Fig.	Key
ARMATURE	11	11
ARM-GOVERNOR	7	9
ARM-PIVOT	7	6
ARM-ROCKER	3	5
BALL	4	15
BAND	6	20
	6	21
	6	22
BEARING-PLATE	1	23
BOLT	1	24
	6	23
	7	12
	8	43
	9	10
	9	11
	11	15
BOLT, 6X12	7	21
BOLT, 6X20	5	23
BOLT, 6X40	5	22
BOLT, 6X8	7	13
BOLT, 7X35.2	2	12
	2	13
BOLT, 8X110	8	24
BOLT, 8X45	1	25
BOLT-FLANGED, 5X20	6	25
BOLT-FLANGED, 6X12	4	17
BOLT-FLANGED, 6X14	6	26
BOLT-FLANGED, 6X16	5	25
	7	26
BOLT-FLANGED, 6X20	5	26
	6	27
	8	44
BOLT-FLANGED, 6X25	1	29
BOLT-FLANGED, 6X30	7	25
BOLT-FLANGED, 6X45	5	28
	6	28
	8	45
BOLT-FLANGED, 6X65	5	29
BOLT-FLANGED, 6X75	5	30
BOLT-FLANGED, 8X12	1	28
BOLT-FLANGED, 8X16	1	30
	5	27
BOLT-FLANGED, 8X30	11	21
BOLT-FLANGED, 8X60	1	32
BOLT-FLANGED, 8X65	1	31

Description	Fig.	Key
BOLT-FLANGED, 8X70	5	31
BRACKET	5	3
	7	1
	9	5
	9	6
BRACKET, COOLINF FAN	5	2
BREATHER-BRAKE	8	19
BRUSH	11	9
CAMSHAFT, VALVE	3	8
CAP	5	1
	11	1
CAP, SPARK PLUG	6	5
CAP-OIL FILLER	4	5
CARBURETOR ASSY	8	6
CASE-AIR FILTER	9	1
	9	2
CASE-PUMP	5	18
CASE-ROCKER	1	5
	1	6
CHAMBER-FLOAT	8	8
CLAMP	1	26
	5	19
	6	18
	8	32
	10	3
	10	4
	10	5
CLUTCH ASSY	11	2
COIL, CHARGING	6	13
COIL, HOUSING	6	12
COIL, IGNITION	6	4
COLLAR	7	17
	8	28
	8	29
	8	30
	9	9
COLLAR, 6.3X12X24.5	6	24
COLLAR, 6X13X2.3	7	16
COLLET	3	4
COVER	1	11
	5	8
	11	5
COVER ASSY	11	8
COVER, OIL PUMP	4	4
COVER-ASSY	11	7

Description	Fig.	Key
COVER-CRANKCASE	1	14
COVER-PUMP	5	9
CRANKCASE-COMP	1	15
CRANKSHAFT ASSY	2	8
ELEMENT, AIR-FILTER	9	4
ELEMENT-AIR FILTER	9	3
FAN, COOLING	5	15
FILTER OIL	4	8
FILTER/OIL	4	9
FLOAT	8	11
FLYWHEEL-ASSY	6	6
GASKET	8	1
	8	2
	8	5
	9	8
GASKET, 16X24X1	6	1
GASKET, 8.2X12X1	1	4
GASKET, BREATHER, COVE	1	7
GASKET, CASE-ROCKER	1	9
GASKET, CRANKCASE COV	1	8
GASKET, DRAIN PLUG	4	1
GASKET, HEAD	1	1
GASKET, INTAKE MANIFO	8	3
	8	4
GASKET, MUFFLER	9	7
GASKET, PUMP CASE	5	5
GASKET, PUMP COVER	5	6
GASKET, THERMOSTAT CO	5	4
GAUGE	4	10
GEAR/SPUR	2	9
GEAR-SPUR	4	11
	5	16
GOVERNOR-ASSY	7	10
HARNESS	6	7
	6	8
HEAD COMP CYLINDER	1	2
	1	3
HOLDER	11	3
HOLDER-MAIN JET	8	22
HOSE-COOLING	5	10
IGNITOR	6	3
IMPELLER	5	17
INSULATOR	8	15
	11	6
JET MAIN, #103.8, 3280	8	36

Alpabetical Index

Description	Fig.	Key
JET MAIN,#106.3	8	38
JET-MAIN,#101.3	8	37
JET-PILOT,#37.5	8	39
JOINT	1	16
	10	2
KEY	2	11
	6	32
LEVER	11	4
LEVER-COMP	7	2
	7	3
LIMITER	8	18
LINK	7	4
	7	5
MANIFOLD-INTAKE	8	23
NOZZLE-MAIN	8	20
	8	21
NUT	3	13
	6	15
	6	16
	7	15
	11	16
	11	17
	11	18
	11	20
NUT-HEX,5MM	7	28
NUT-HEX,6MM	7	27
	9	12
O RING	5	33
O RING,10MM	1	33
O RING,11MM	4	19
O RING,25MM	4	20
O-RONG	8	34
PANEL-COMP-CONTROL	7	11
PIN	1	19
	1	20
	4	12
	5	20
	8	33
PIN-DOWEL	5	32
PIN-PISTON	2	2
PIPE,OIL GAUGE	1	13
PIPE-INTAKE	8	14
PISTON,ENGINE/L 0.50	2	5
PISTON-ENGINE	2	1
PLATE	1	10

Description	Fig.	Key
PLATE	4	3
PLUG,DRAIN	4	14
PLUG-SPARK,BPR4ES(HG	6	19
PUMP-WATER	5	12
REGULATOR,VOLTAGE	6	2
RELAY	6	11
RESERVOIR	5	11
RETAINER,SPRING	3	10
RETAINER,VALVE SPRIN	3	3
RING PISTON SET	2	4
RING SET	2	3
RING SNAP/S12	3	15
RING, SNAP	8	31
RING,SNAP	11	19
RING-O	4	13
RING-SNAP	2	10
ROD-ASSY CONNECTING	2	6
	2	7
ROD-PUSH	3	9
ROTOR,PUMP	4	7
ROTOR-PUMP,IN	4	6
SCREW	1	18
	3	12
	4	18
	6	29
	6	30
	8	25
	8	26
SCREW,5X30	7	14
SCREW,6X25	6	14
SCREW-PAN+-,4X14	8	46
SCREW-PAN-WP+,4X6	6	31
SCREW-PILOT AIR	8	7
SEAL	8	42
SEAL OIL	1	21
SEAL,OIL/IS 10X20	5	21
SEAL-MECHANICAL	5	14
SEAL-OIL	3	14
SEAL-OIL,VC 8X12X2.5	1	22
SHAFT	5	7
SHAFT,OIL PUMP	4	2
SHAFT-CARBURETOR	8	12
	8	13
SHAFT-ROCKER	3	6
SLEAVE	7	8

Description	Fig.	Key
SOLENOID ASSY	8	17
SPRING	3	11
	4	16
	7	18
	7	19
	7	20
	8	40
	8	41
SPRING BRUSH	11	10
SPRING-GOVERNOR	7	7
STARTER-ELECTRIC	11	12
STOPPER	11	14
STUD	1	17
SWITCH	6	9
	6	10
	11	13
TAP ASSY	10	1
TAPPET	3	7
THERMOSTAT	5	13
TUBE	1	27
	8	47
TUBE 5.8X10.8X140	10	6
TUBE 5X10X700	10	7
TUBE,5X6X75	8	35
VALVE	1	12
	8	16
VALVE,EXHAUST	3	2
VALVE,FLOAT	8	10
VALVE-INTAKE	3	1
VALVE-THROTTLE	8	9
WASHER	5	24
	6	17
	7	22
	7	23
	8	27
WASHER,6X28X1.6	7	24
WASHER-PLAIN,6MM	7	29
WASHER-SPRING,6MM	9	13

Alpabetical Index

6004-097-640-00

Description	Fig.	Key
ADAPTER/320X080 ASSY	22	1
ARM/CONTROL	20	30
ARM/FLOATING COMP	20	20
ARM/TENSION	22	2
ARMATURE/STARTE ASSY	28	5
BALL	1	5
BEARING,RB/6203	20	13
BEARING,THRUST CRANK	5	13
	6	2
	6	4
BEARING/BALL	20	14
BEARING/CONNECTING R	6	5
	6	6
	13	7
BEARING/CRANK/LOWER	5	12
BEARING/CRANK/UPPER	5	11
BEARING/NEEDLE	28	8
	28	9
BEARING/OILLESS	28	12
	28	14
	28	16
BEARING/WITH SHOCKAB	28	13
BELT/VNR5A36.0	18	5
BODY/NOZZLE HOLDER	26	2
BODY/OILPUMP	16	2
BOLT	1	7
	5	2
	9	34
	11	18
	23	8
BOLT,ADJUST	5	29
BOLT,JOINT	16	11
BOLT,SEMS/M10X20	8	3
BOLT,SEMS/M8X25 7T	4	3
BOLT/CONNECTINGROD	13	6
BOLT/CRANK	15	9
BOLT/FLANGE	15	7
BOLT/M6	9	28
	9	29
BOLT/M6X10	20	18
BOLT/M6X18	20	26
BOLT/M8X20	9	35
	20	8
BOLT/S	12	5
	16	5
BOLT/S	20	16
BOLT/THROUGH	28	30
BOLT/WASHERHEAD	27	8
BOLT/WS	16	4
BRACKET ROCKER SHAFT	11	12
BRACKET,ROCKER SHAFT	11	13
BRUSH/STARTER	28	2
CAMSHAFT/INJECTION P	20	10
CAP,BLANK/30	9	31
CAP,OIL FILLER	2	2
CAP,SEALING	1	2
CARTRIDGE/OILFILTER	16	13
CLAMP,STRAINER	16	8
CLAMP/WIRE/10-15	17	14
CLIP/HOSE/7.6-8.2	21	4
CLIP/HOSE/8.7-9.3	21	8
CLUTCH/STARTER ASSY	28	6
CONNECTINGROD ASSY	13	5
CONNECTOR,OIL FILTER	5	24
CONNECTOR/FUEL	21	1
CONNECTOR/GLOWPLUG	24	4
CORRUGATEDTUBE	21	5
COVER	28	11
COVER,INJ PUMP	5	25
COVER/CYLINDER HEAD	2	1
CRANKSHAFT ASSY	15	1
CUP/SEALING/12	5	7
CUP/SEALING/16	9	3
CUP/SEALING/28	5	3
CUP/SEALING/36	5	4
CUTTER,VALVE	11	5
CYLINDERBLOCK ASSY	5	1
CYLINDERHEAD ASSY	1	1
DOWEL	5	21
ELEMENT ASSY	27	7
FLANGEBOLT	3	3
	3	4
	5	27
	7	4
	9	5
	9	6
	9	8
	9	9
	9	10
	9	11
FLANGEBOLT	9	36
	10	2
	11	19
	16	9
	17	6
	17	11
	17	17
	17	18
	17	21
	17	22
	18	2
	23	3
	23	5
	24	7
FLYWEIGHT	20	17
FLYWHEEL ASSY	15	5
FRAME/COMMUTATOR END	28	10
GASKET	2	5
	17	2
	24	6
	25	5
	25	21
GASKET,EXH.MANIFOLD	4	2
	25	7
GASKET,INLET MANIFOL	3	2
	25	6
GASKET,NOZZLE	19	3
GASKET,SPACER	17	9
	25	18
GASKET/COVER	5	26
	25	11
GASKET/CYLINDERHEAD	1	6
	25	3
GASKET/DELIVERYVALVE	27	4
GASKET/GEARCASE	9	23
	25	14
GASKET/HOUSING	17	16
	25	19
GASKET/PLATE	9	33
	25	15
GASKET/WATER PUMP	17	5
	25	17
GEAR/CAMSHAFT	12	2
GEAR/CRANK	15	3
GEAR/IDLE ASSY	12	6

Alpabetical Index

Description	Fig.	Key
GEAR/INJECTIONPUMP	20	11
GEAR/STARTER PLANETA	28	17
GEAR/STARTERINTERNAL	28	18
GEARCASE ASSY	9	1
GENERATOR ASSY	23	1
GLOWPLUG	24	3
GUIDE/LEVELGAGE COMP	5	32
HANGER	10	1
HOLDER/DELIVERYVALVE	27	2
HOLDER/NOZZLE ASSY	26	1
HOLDER/STARTER ASSY	28	3
HOSE,RUBBER	21	6
HOSE/RUBBER	2	6
	17	13
HOSE/RUBBER/160	21	3
HOUSING ASSY	27	6
HOUSING/STARTER ASSY	28	7
HOUSING/THERMOSTAT	17	15
INJECTIONNOZZLE ASSY	19	1
INJECTIONPUMP ASSY	20	1
JOINTT-TYPE	21	7
KEY/07X05X09	12	3
	20	12
KEY/07X05X43	15	4
LEVELGAGE	5	31
LEVER(CONTROL) COMP	20	25
LEVER/PINIONDRIVE	28	19
MANIFOLD(INLET) ASSY	3	1
MANIFOLD/EXHAUST	4	1
METAL,CRANK SET	5	10
METAL,CRANK SET 050	6	1
METAL,CRANK SET 100	6	3
NIPPLE	5	22
NOZZLE ASSY	26	51
NUT	11	17
	26	50
	28	28
	28	29
	28	34
NUT,CAP/M 8	9	15
NUT/CAP	2	4
NUT/FLANGE/M10	23	6
NUT/M 6	20	27
NUT/M08	9	7
	11	20

Description	Fig.	Key
NUT/M08	17	7
	17	12
	20	9
NUT/M6	5	30
	9	30
	20	31
NUT/M8	9	14
	28	32
NUT/NOZZLERETAINING	26	5
NUT/PINIONSTOP	28	23
OILPAN COMP	7	1
OILPUMP ASSY	16	1
O-RING	17	20
	25	20
ORING	27	3
O-RING/P15	16	7
	25	16
O-RING/P18	7	3
O-RING/P8	20	28
PACKING	9	16
	16	12
	25	13
PIECE,DISTANCE	26	6
PIN	5	17
	5	28
	9	19
	15	2
PIN,CONTROL	20	22
PIN,GROOVE	9	22
PIN,NOZZLE HOLDER	26	3
PIN,PISTON	13	3
PIN/ARM	9	17
PIN/IDLEGEAR	5	6
PIN/INJECTIONPUMP	27	10
PIN/SNAP	9	18
PIN/STRAIGHT	5	16
	16	3
PIN/TUBE	5	15
PIPE,OIL	16	10
PIPE/FUEL	21	2
PIPE/INJECTION ASSY	19	4
	19	5
	19	6
PIPE/WATEROUTLET	17	19
PISTON	13	1

Description	Fig.	Key
PISTON(OV) 78.7	14	1
PISTON(OV) 79.2	14	3
PISTON/VALVE/RELIEF	9	25
PLATE	27	11
	28	27
PLATE,THRUST	12	4
PLATE,THRUST INJPUMP	20	15
PLATE/ADJUST	23	2
PLATE/ADJUSTING	27	9
PLATE/FRONT	9	32
PLATE/REAR	8	1
PLATE/TAPPET/AD 0.2	27	23
PLATE/TAPPET/AD 0.25	27	27
PLATE/TAPPET/AD 0.3	27	24
PLATE/TAPPET/AD 0.35	27	28
PLATE/TAPPET/AD 0.4	27	25
PLATE/TAPPET/AD 0.45	27	29
PLATE/TAPPET/AD 0.5	27	26
PLATE/TAPPET/AD 0.55	27	30
PLATE/TAPPET/AD 0.6	27	18
PLATE/TAPPET/AD 0.65	27	31
PLATE/TAPPET/AD 0.7	27	19
PLATE/TAPPET/AD 0.8	27	20
PLATE/TAPPET/AD 0.9	27	21
PLATE/TAPPET/AD 1.0	27	22
PLATE/WATER PUMP	17	3
PLUG	11	11
PLUG/M14X1.5	7	2
PLUG/PT1/2	1	3
PLUG/PT1/8	5	5
	9	2
PLUG/SCREW	9	20
PLUG/SCREW/SEAL	5	23
POINTER	8	2
PULLEY/CRANK	15	8
PULLEY/WATERPUMP	18	1
RACK/CONTROL ASSY	27	13
REPAIR/ENGINE SET	25	1
RING,SNAP	13	4
RING,SNAP/12 C	9	27
RING,SNAP/16 C	11	15
RING,SNAP/4 E	20	23
RING/PISTON SET	13	2
RING/PISTON/OV SET	14	2
	14	4

Alpabetical Index

6004-097-640-00

Description	Fig.	Key
RING/SNAP	28	21
	28	22
RINGGEAR	15	6
RINK/CONTROL	20	21
ROCKERARM	11	9
ROCKERSHAFT ASSY	11	8
ROD,PUSH	11	7
SCREW	28	33
SCREW ADJUST	11	16
SCREW/HOLLOW	20	3
SCREW/WATER PUMP	17	4
SEAL,BEARING CAP	5	8
	25	8
SEAL,BEARING CAP/7	5	9
	25	9
SEAL,CYL.HEAD COVER	2	3
	25	4
SEAL,OIL	1	4
	5	14
	9	4
	25	2
	25	10
	25	12
SEAT/SPRING/LOWER	27	17
SEAT/SPRING/UPPER	27	15
SEAT/VALVESPRING	11	4
SHAFT,CAM	12	1
SHAFT/ROCKERARM ASSY	11	10
SHAFT/STARTER PLANET	28	15
SHIM/INJECTIONPUMP	20	4
	20	5
	20	6
	20	7
SLEEVE/PLUNGER	27	14
SOLENOID	24	5
SPACER,PUMP.WATER	17	8
SPACER/FAN	18	3
	18	4
SPRING	11	14
SPRING,RETURN	20	29
SPRING,STARTING	20	34
SPRING/DELIVERYVALVE	27	1
SPRING/GOVERNOR	20	24
SPRING/NOZZLEHOLDER	26	4
SPRING/PUMPPLUNGER	27	16
SPRING/RELIEF VALVE	9	26
SPRING/STARTERBRUSH	28	4
SPRING/VALVE	11	3
STARTER ASSY	23	7
STOPPER/FULLLOAD	9	13
STRAINER	16	6
STUD	1	8
	4	4
	5	19
	5	20
STUD/M8X40	5	18
	17	10
SWITCH/MAGNETIC ASSY	28	20
SWITCH/OILPRESSURE	24	1
SWITCH/OVERHEAT	24	2
TAPPET	11	6
TAPPET/INJECTIO ASSY	27	12
THRUSTPIECE	20	19
VALVE ASSY	27	5
VALVE/EXHAUST	11	2
VALVE/INTAKE	11	1
VALVE/RELIEF ASSY	9	24
WASHER	19	2
	28	31
WASHER / M6	20	32
WASHER,SP/M 6	20	33
WASHER/0.9	26	7
WASHER/0.925	26	8
WASHER/0.95	26	9
WASHER/0.975	26	10
WASHER/08X14X01	9	12
	9	21
	25	22
WASHER/1.0	26	11
WASHER/1.025	26	12
WASHER/1.05	26	13
WASHER/1.075	26	14
WASHER/1.1	26	15
WASHER/1.125	26	16
WASHER/1.15	26	17
WASHER/1.175	26	18
WASHER/1.2	26	19
WASHER/1.225	26	20
WASHER/1.25	26	21
WASHER/1.275	26	22
WASHER/1.3	26	23
WASHER/1.325	26	24
WASHER/1.35	26	25
WASHER/1.375	26	26
WASHER/1.4	26	27
WASHER/1.425	26	28
WASHER/1.45	26	29
WASHER/1.475	26	30
WASHER/1.5	26	31
WASHER/1.525	26	32
WASHER/1.55	26	33
WASHER/1.575	26	34
WASHER/1.6	26	35
WASHER/1.625	26	36
WASHER/1.65	26	37
WASHER/1.675	26	38
WASHER/1.7	26	39
WASHER/1.725	26	40
WASHER/1.75	26	41
WASHER/1.775	26	42
WASHER/1.8	26	43
WASHER/1.825	26	44
WASHER/1.85	26	45
WASHER/1.875	26	46
WASHER/1.9	26	47
WASHER/1.925	26	48
WASHER/1.95	26	49
WASHER/9X22X2	23	4
WASHER/AIR BLEEDER	20	2
WASHER/SK	28	24
	28	25
	28	26
WATERPUMP ASSY	17	1
YOKE/STARTER ASSY	28	1

Alpabetical Index

Description	Fig.	Key
ACCUMULATOR ASSY	64	1
ACTUATOR ASSY	12	30
	13	30
	14	13
	36	14
	118	38
	140	8
ADAPTER(90ß/PUMP)	60	5
ADAPTER,STRAIGHT	71	12
ADAPTER/G1/2-L20	59	3
ADAPTER/L/G1/4 ASSY	73	9
ADAPTER/L/ORIFICE	70	11
	71	11
ADAPTER/L/PF1/4 ASSY	72	9
ADAPTER/PF1/4 ASSY	72	7
	73	7
ADAPTER/RC1/4	70	12
ADAPTER/SUCTION COMP	61	1
ADAPTERFILTER	21	14
ADAPTOR/G3/8XM16ASSY	59	5
ARM LH	152	15
	153	15
ARM,HST LEVER	12	16
	13	16
ARM,PLANTING/E/LH	152	20
ARM,PLANTING/E/RH	153	20
ARM/ADJUST	115	23
ARM/ADJUST/D	116	23
ARM/AUTO ACCELERATOR	19	3
	20	2
ARM/BRAKE/NP COMP	57	3
ARM/CLUCH/FERTILIZE	54	44
	55	43
ARM/CLUCH/ROTOR	54	45
	55	44
ARM/CLUCH/ROTOR COMP	99	1
ARM/CLUTCH COMP	53	5
ARM/CLUTCH/1 COMP	98	13
ARM/CLUTCH/2 COMP	98	14
ARM/CLUTCH/3 COMP	98	15
ARM/CLUTCH/AZE COMP	123	46
ARM/CLUTCH/PLANTING	69	12
ARM/CLUTCH/SEEDLING	138	41
	138	42
ARM/COUNTER/50 COMP	115	43
ARM/COUNTER/50/ COMP	116	42
ARM/CYLINDER COMP	62	1
ARM/CYLINDER/6D COMP	63	1
ARM/DISCHARGE	118	23
	120	29
	120	59
ARM/DRIBVE/NP COMP	115	55
	116	54
ARM/DRIVE COMP	115	35
ARM/DRIVE/D COMP	116	35
ARM/EFLOATSENSE COMP	106	7
ARM/FERTILIZEDRIVE	115	64
	116	63
ARM/MOTOR/ROTOR COMP	101	14
ARM/PITMAN/6	40	20
ARM/PLANTING/A COMP	36	1
ARM/PLANTING/B COMP	36	6
ARM/PUSH-OUT/PZ	152	35
	153	35
ARM/ROTOR	101	23
ARM/ROTOR/CLUCH COMP	99	11
ARM/SEEDLINGFEED	138	1
ARM/SEEDLINGTANK	133	13
ARM/STOPPER/LH COMP	43	49
	44	46
ARM/STOPPER/RH COMP	43	50
	44	47
ARM/TENSION COMP	9	4
ARM/TENSION/FD COMP	7	5
ARM/TRUNNION/HMS1/00	150	23
	151	12
ARM/TRUNNION/NP	17	1
	18	1
BALL	35	7
	35	13
	35	19
	107	35
BAND	67	7
	68	7
	91	19
	92	19
	92	27
	105	4
BAND,WIRE/140	92	28
	117	3
BAND,WIRE/140	120	79
	125	5
BAND/WIRE/250	3	46
	92	29
BASE/COOLINGFAN/D	8	3
BASE/COUNTER/NP COMP	57	21
BASE/ENGINE/HG COMP	6	1
BASE/MARKER/LH COMP	129	11
BASE/MARKER/RH COMP	129	12
BASE/MOTOR/CLUTCH	98	1
BASE/MOTOR/PLANTING	69	1
BASE/MOTOR/ROTO COMP	101	1
BASE/TENSION/D	9	1
BASE/TOTALCLUTC COMP	120	87
BATTERY(55B24L) ASSY	95	4
BATTERY/44B19L ASSY	94	4
BATTERYSTAY COMP	4	11
	94	6
	95	6
	125	4
BEARING	150	26
BEARING,BALL	55	49
BEARING,RB 6006	33	12
	34	12
	107	16
BEARING,RB/6001	107	18
	107	47
BEARING,RB/6002	152	13
	153	13
BEARING,RB/6002SS	108	5
	115	57
	116	56
BEARING,RB/6003	107	37
	123	22
BEARING,RB/6005	107	49
	152	5
	153	5
BEARING,RB/6006SS	16	20
	103	5
BEARING,RB/6007	40	2
BEARING,RB/6007SS	101	25
BEARING,RB/6201	54	24
	55	23
	152	12
	153	12

Alpabetical Index

2232-097-100-00

Description	Fig.	Key
BEARING, RB/6202	102	8
	102	30
BEARING, RB/6202SS	9	5
BEARING, RB/6203	31	6
	32	6
	40	3
	53	2
	54	25
	55	24
	102	10
	102	16
	102	21
	102	34
	102	37
	123	35
BEARING, RB/6204	24	2
	25	2
	28	11
	29	11
	31	2
	32	2
	54	30
	54	37
	54	50
	55	29
	55	36
	107	9
	123	11
	150	17
	150	21
	151	14
BEARING, RB/6204SS	52	10
BEARING, RB/6205	22	2
	23	2
	28	8
	29	8
	33	21
	34	21
	43	5
	44	5
	54	9
BEARING, RB/6206	26	9
	27	9
	43	45
	44	42
BEARING, RB/6206	54	33
	54	53
	55	32
	55	52
BEARING, RB/6207	30	9
	43	31
	44	25
BEARING, RB/6208	54	54
	55	53
BEARING, RB/6209	43	9
	43	13
	44	9
	44	13
BEARING, RB/6302	22	3
	23	3
	33	2
	34	2
BEARING, RB/6303	26	8
	27	8
	31	5
	32	5
	33	9
	34	9
	40	10
BEARING, RB/6304	54	51
	55	50
BEARING, RB/6305	24	3
	25	3
	33	22
	34	22
	40	11
	43	43
	44	40
BEARING, RB/6306	28	2
	29	2
BEARING, RB/6306SH2	43	28
	43	29
	44	22
	44	23
BEARING/BALL	150	46
	150	47
	151	36
	151	37
BEARING/BALL 6205SH2	55	9
BEARING/THRUST	150	24
BEARING/THRUST	151	13
BELT/PLANT/PZ	138	27
BELT/VA023	5	17
BELT/VB049	15	14
BELT/VC053	16	24
BLOCK/CYLINDER/23CC	151	3
BLOCK/CYLINDER/24CC	150	4
BLOCK/CYLINDER/HMS1	150	3
BLOCK/PORT/HMS1/021	150	2
BLOCK/PORT/HMS1/022	151	2
BLOWER/FG ASSY	119	19
BOLT	2	6
	2	19
	3	10
	26	11
	27	11
	33	32
	34	32
	37	3
	53	7
	115	3
	116	3
	117	8
	118	46
	122	18
	122	27
	152	42
	153	42
BOLT(S) M10X30	72	4
	73	4
BOLT(S) M8X35	125	3
BOLT(SP)/M6X16	92	21
	107	55
BOLT, SEMS	3	34
	4	34
	16	15
	28	15
	29	15
	101	41
	114	3
	126	7
BOLT, SEMS (SP)	98	20
	98	32
BOLT, SEMS (S) M8X16	3	16
	3	39

Alpabetical Index

Description	Fig.	Key
BOLT,SEMS (S) M8X16	5	14
	9	7
	40	19
	56	13
	123	30
	123	38
BOLT,SEMS/M8X25 7T	30	6
	99	7
	115	65
	116	64
BOLT,SEMS/M8X45 7T	54	5
	55	5
BOLT/(S)M8X55	70	8
	71	8
BOLT/10X16/PQ	35	4
	35	10
BOLT/FAN	16	16
BOLT/FRANGE/M10X25	43	40
	44	36
BOLT/JOINT	108	17
BOLT/KNOB/M06X13	97	6
	137	8
BOLT/M 5X12	101	5
	113	10
BOLT/M 6X12	97	8
	138	9
	138	37
BOLT/M 6X20	12	26
	13	26
BOLT/M 6X25	12	27
	13	27
BOLT/M 6X35	138	14
	138	36
BOLT/M 8X35	101	37
BOLT/M 8X40	87	5
BOLT/M 8X50	15	17
	17	2
	18	2
	57	4
BOLT/M 8X70	86	2
BOLT/M 8X80	89	2
	90	2
BOLT/M10X12	107	33
BOLT/M10X140	15	4
	16	4
BOLT/M10X20	118	8
BOLT/M10X25	8	4
	9	2
	43	18
	44	18
	103	3
	105	3
BOLT/M10X30	43	21
	72	5
	73	5
	82	12
	83	12
	103	6
BOLT/M10X35	5	7
	40	21
BOLT/M10X35/S	43	3
	43	51
	44	3
	44	48
BOLT/M10X75	15	5
	16	5
BOLT/M12X25	45	2
	45	4
	46	2
	46	4
BOLT/M12X45	38	3
	39	3
BOLT/M4X14/SUS	154	18
BOLT/M4X20/SUS	154	17
BOLT/M5X12/SP/STAINL	136	19
BOLT/M6X16	152	38
	153	38
BOLT/M6X16X16	3	36
	3	44
	81	4
	89	25
	90	26
BOLT/M6X2	119	21
BOLT/M8X110	21	4
BOLT/M8X12	21	11
BOLT/M8X160	21	17
BOLT/M8X20	5	4
	43	37
	44	33
	114	8
BOLT/M8X20/SP/S	152	41
	153	41
BOLT/M8X30	5	10
	21	3
	43	48
	44	45
	82	3
	83	3
	84	3
BOLT/M8X35	40	8
BOLT/M8X90	101	19
	107	6
	108	6
	109	4
	123	3
	126	5
BOLT/S	2	22
	4	10
	4	37
	8	2
	16	19
	21	16
	36	12
	54	28
	54	47
	55	27
	55	46
	56	4
	60	4
	61	3
	65	4
	66	4
	67	3
	68	3
	70	19
	71	19
	81	10
	99	13
	102	4
	107	3
	108	12
	133	24
	133	33
	136	9
BOLT/SEAL	54	59

Alpabetical Index

2232-097-100-00

Description	Fig.	Key
BOLT/SEAL	55	58
BOLT/SEAL/M10X25/S	7	4
	48	3
	49	3
BOLT/SEAL/M10X30/S	48	2
	49	2
	54	58
	55	57
BOLT/SEAL/M12X35	54	56
	55	55
BOLT/SHIFT/PLANTING/	35	16
BOLT/SP	3	1
	3	4
	3	24
	5	16
	12	9
	12	13
	12	25
	13	9
	13	13
	13	25
	14	7
	17	8
	17	30
	18	8
	38	6
	39	6
	43	23
	52	12
	57	22
	58	2
	69	3
	78	2
	79	3
	79	6
	79	14
	80	3
	80	6
	80	14
	82	14
	82	18
	82	20
	83	14
	83	18
	83	20

Description	Fig.	Key
BOLT/SP	84	10
	89	40
	89	46
	90	41
	90	47
	91	20
	91	26
	92	26
	92	31
	96	2
	98	2
	100	7
	101	3
	101	22
	101	30
	101	33
	106	2
	107	53
	110	3
	110	7
	111	3
	111	6
	119	6
	123	43
	126	10
	126	11
	126	16
	127	3
	127	6
	128	3
	129	13
	133	14
	133	22
	136	5
	136	7
	137	6
	137	10
	137	12
	137	14
	137	16
	138	39
BOLT/SP/M6X20/G	117	22
	118	9
	118	17
	118	22

Description	Fig.	Key
BOLT/SP/M6X20/G	118	28
	118	33
	119	18
	119	33
	120	73
BOLT/SP/M8X20/G	115	14
	116	14
	118	36
	118	45
	119	13
BOLT/SP/M8X25/SUS FA	76	13
	77	13
BOLT/SPM6X55/G	115	2
	116	2
	119	16
	120	61
BOLT/TENSIONER/M10X3	123	39
BOLT/UNC3/8X22	5	3
BOOT	89	35
	90	36
	117	17
BOOT,DRIVE SHAFT	50	4
	51	4
BOOT/CAM/LEAD	108	14
BOOT/DISCHARGE	118	12
BOOT/DISCHARGE/C	118	14
BOOT/DISCHARGE/RH	118	13
BOOT/SEEDLING FEED C	138	45
BOOT/SHAFT	52	3
BOOTS/ROTOR/DRIVE	99	8
BOSS,EXTENSION MARKE	87	9
BRACKET,FUSE	97	7
BRACKET/ENGINE/A	2	4
BRACKET/ENGINE/B	2	5
BRACKET/GENERATOR/FD	5	1
BRACKET/RESERVETANK	4	33
BRACKET/ROLLING COMP	105	2
BRACKET/SEAT/PZ/8	79	2
	80	2
BRAKE/8 ASSY	26	7
	27	7
BRAKE/SLIPPERS/B	12	15
	13	15
B-RIVET/ALMI	133	10
BRUSH	147	1

Alpabetical Index

Description	Fig.	Key
BULB/12V 20W	135	2
BULB/12V18W	88	2
BUMPER/NP COMP	58	1
BURUSH COMP	120	7
	120	37
BUSH	62	2
	63	2
BUSH, COLUMN	56	2
BUSH, EXHAUST LEVER	120	24
	120	54
BUSH, GEAR	120	12
	120	42
BUSH, SEEDING OUT	138	20
BUSH, SEEDLING	120	71
	125	12
	138	18
	138	35
BUSH/08X18X36	152	23
	153	23
BUSH/10X12X06	115	29
	115	36
	115	47
	116	29
BUSH/10X12X10	98	18
	115	25
	115	37
BUSH/10X12X20	115	24
	116	24
BUSH/10X13X10	116	25
	116	36
	116	46
BUSH/12X15X20	98	6
BUSH/12X16X24	109	3
BUSH/14X16X20	120	65
BUSH/15X17X25	69	2
	101	2
BUSH/15X18X25	98	10
BUSH/17X19X15	17	28
	18	28
	123	20
BUSH/17X28X19	120	17
	120	47
BUSH/18X21X25	60	2
	65	2
	66	2

Description	Fig.	Key
BUSH/19X35X20	56	3
BUSH/20X23X25	26	3
	27	3
BUSH/22X26X25	108	9
BUSH/68X71X14	150	28
	151	17
BUSH/95X100X22	150	27
	151	16
BUSH/F/10X12X15	14	9
	17	19
	18	19
BUSH/HOLDER/CLUTCH/N	138	32
BUSH/ROTOR/SIDE	100	16
BUSH/SEEDLING FEED/C	138	19
BUSH/SEEDLINGFEED/20	138	12
BUSHPUSHNUT/08	120	77
BUZZER	89	37
	90	38
BUZZERASSY	89	42
	90	43
CABLE, HOPPER	154	6
CABLE/ACCELERATOR/6D	20	1
CABLE/ACCELERATOR/G/	19	1
CABLE/CHOKE/G/NP	19	10
CABLE/CLUTCH/FERTILI	54	66
	55	65
CABLE/FERTILIZE/CL	120	85
CABLE/FERTILIZE/L	120	86
CABLE/FERTILIZE/R	120	84
CABLE/HST/FORWARD	17	31
	18	30
CABLE/HST/REVERSE	17	32
	18	31
CABLE/RIDGE CLUTCH/6	98	23
	98	24
	98	25
CABLE/ROTOR/CLUCH	99	14
CABLE/SEEDLING FEED	138	46
	138	48
	138	49
CAM/CHANGE/NP COMP	14	8
CAM/HST/D/NP COMP	13	11
CAM/HST/FRONT	12	23
CAM/HST/FRONT/NP	13	23
CAM/HST/NP COMP	12	11

Description	Fig.	Key
CAM/HST/REAR	12	24
	13	24
CAM/LEAD	108	1
CAM/PUSHED OUT/LH	152	47
CAM/PUSHED OUT/RH	153	47
CAM/SEND/6 COMP	109	1
CAM/STOPSWITCH	140	3
CAP	3	20
	4	26
	56	10
	87	8
	119	20
	120	91
	122	29
CAP, DUCT/EXHAUST	118	19
CAP, OIL/30	21	7
CAP, SEEDLING FRAME/P	126	18
CAP, SHUTTER	118	3
CAP/10	59	8
	133	16
	152	17
	153	17
CAP/15X15L	118	49
CAP/22X15	101	31
	126	19
CAP/24X18	110	4
CAP/30X20	126	17
CAP/35	123	25
CAP/35/YELLOW	21	8
CAP/9	10	12
CAP/BUMPER	58	3
CAP/COVER/COLUMN/NP	89	31
	90	32
CAP/D6/YELLOW	86	4
CAP/ENGINECOVER/620	79	15
CAP/FERTILIZECLUTCH	120	78
CAP/FRONTWHEEL/650	47	1
CAP/FUSE BOX	91	7
	92	7
CAP/GREEN/8	36	4
CAP/SWITCH	12	2
	13	2
CAP/TANK/E1 ASSY	10	8
	11	8
CAP/YELLOW/10/KNOB	152	36

Alpabetical Index

2232-097-100-00

Description	Fig.	Key
CAP/YELLOW/10/KNOB	153	36
CAPSULE/LOWER/PZN	120	2
	120	32
CAPSULE/UPPER/PZN	120	1
	120	31
CARTRIDGE	61	4
CASE/CENTERROTOR/LH	102	1
	102	2
CASE/CENTERROTOR/RH	102	25
	102	26
CASE/FINAL/LOWE COMP	43	26
CASE/FINAL/LOWER/D	44	20
CASE/FINAL/UPPER	43	1
	44	1
CASE/HMS1/017	150	1
CASE/HMS1/022	151	1
CASE/REAR/IN/LH	54	1
	55	1
CASE/REAR/IN/RH	54	2
	55	2
CASE/REAR/OUT/8D	54	4
	55	4
CASE/RELAY COMP	97	3
CASE/ROTARY/IN/LH	152	2
CASE/ROTARY/IN/RH	153	2
CASE/ROTARY/OUT/LH	152	1
CASE/ROTARY/OUT/RH	153	1
CASE/SEND/LH	107	1
	107	2
CASE/SUPPORTFRAME	123	1
CASE/SUTTER	118	2
CASE/TRANSMISSION/LH	21	1
CASE/TRANSMISSION/RH	21	2
CASING/INNER	119	24
CASING/OUTER/PG	119	25
CATCH/LEAD	108	10
CHAIN/ROLLER/41X034	54	21
	55	20
CHAIN/ROLLER/60	123	26
CLAMP	4	31
CLAMP,HARNESS	16	8
	88	5
CLAMP,SPRING/4	122	5
CLAMP/WIRE/36-44	4	16
CLAMP/WIRE/49-60	4	24
CLAMP/WORM/20-32	3	31
	61	6
CLAMP/WORM/23-35	4	15
CLAMP/WORM/32-50	108	15
CLAMP/WORM/44-60	108	16
CLEANER/AIR ASSY	4	18
CLIP	4	22
CLIP,MAT/SUNSET GRAY	54	68
	55	67
CLIP,STEP MAT	76	6
	76	18
	77	6
	77	18
CLIP/HOSE/10.4-11.1	21	23
CLIP/HOSE/11.1-12	3	14
CLIP/HOSE/11.9-12.6	61	11
CLIP/HOSE/12.6-13.4	10	17
	11	13
	11	20
CLIP/HOSE/13.8-14.8	10	23
CLIP/HOSE/14.7-15.9	10	13
CLUCH/PLANTER/DRIVE	33	27
	34	27
CLUTCH,ROLLER/FC-25	115	51
	116	50
CLUTCH/DIFFLOCK	30	14
CLUTCH/DRIVE	54	15
	55	14
CLUTCH/DRIVEN/FERTIL	54	32
	55	31
CLUTCH/HST/NP COMP	17	24
	18	24
CLUTCH/NP ASSY	28	5
CLUTCH/NP8 ASSY	29	5
CLUTCH/PLANTING	33	26
	34	26
CLUTCH/SEEDLING FEED	138	43
CLUTCHFULCRUM	120	72
COCK	3	21
COCK ASSY	4	3
COLLAR SLIDE METAL	136	8
COLLAR, CARRIER	107	21
COLLAR/09X12X09	17	36
	18	35
COLLAR/09X12X57	89	5
COLLAR/09X12X57	90	5
COLLAR/10X12X14	70	5
	71	5
COLLAR/10X14X8	98	16
COLLAR/11X25X5	43	39
	44	35
COLLAR/12X16X24	101	34
COLLAR/13X18X17	138	33
COLLAR/17X22X20	14	25
COLLAR/17X25X08	123	34
COLLAR/18X22X12	102	24
COLLAR/20X25X21	28	4
	29	4
COLLAR/20X25X3.2	54	19
	55	18
COLLAR/28X35X02	54	17
	55	16
COLLAR/33X43X28	44	38
COLLAR/60X70X08	44	26
COLLAR/CLUTCH	54	18
	55	17
COLLAR/ROTOR/SIDE	100	17
COLLAR/SPRING	43	35
	44	31
COLLER/10X14X10	113	3
COLLER/47X3	120	25
	120	55
COLLER/8X15X15	57	7
COLOR/11X14X31	15	16
COLOR/21X27X18	33	14
	34	14
COLOR/21X27X23	33	17
	34	17
COLUMN/LOWER/NP COMP	56	12
COLUMN/UPPER/NP COMP	56	1
CONNECTOR	21	9
CONNECTOR/MINIHALF	21	20
CONTROLLER/6/FRONT	96	1
CONTROLLER/6/REAR	97	1
CONTROLLER/MOTO ASSY	91	25
	92	30
CORRUGATED TUBE/07X0	3	15
CORRUGATED TUBE/07X1	89	36
	90	37
CORRUGATED TUBE/10X6	138	47

Alpabetical Index

Description	Fig.	Key
CORRUGATETUBE/28X120	4	14
CORRUGATETUBE/28X65	3	30
COUPLING/DRAIVE	108	2
	124	1
COUPLING/PUMP	59	7
COVER	123	28
COVER ASSY	4	19
COVER,METAL	40	5
COVER,SEEDING TANK/M	133	3
	133	4
COVER/BATTERY/D/NP	95	5
COVER/BATTERY/NP	94	5
COVER/CASE/ROTOR	102	3
COVER/CLUTCH	28	6
	29	6
COVER/COIL/M	100	5
COVER/COLUMN/FRONT/N	89	26
	90	27
COVER/COLUMN/LOWER/N	89	30
	90	31
COVER/COLUMN/REAR/NP	89	27
	90	28
COVER/DICTHER/NP	117	4
COVER/ENGINE/D/NP	80	1
COVER/ENGINE/NP	79	1
COVER/EXAUST/NP8	2	18
COVER/EXHAUST/F COMP	3	6
COVER/EXT	3	8
COVER/FAINAL/FRONT/D	44	43
COVER/FERTIRIZE CLUT	54	67
	55	66
COVER/FINAL/FRONT	43	46
COVER/FRONT/UPPER	43	16
	44	16
COVER/HOPPER/6 ASSY	154	3
COVER/MARKER/LH	129	25
COVER/MARKER/RH	129	26
COVER/MOTOR	129	22
COVER/MOTOR/PLANTING	69	11
COVER/MUFFLER/G COMP	3	9
COVER/MUFFLER/NP	3	7
COVER/PLANTING/PZ/E	152	21
	153	21
COVER/PLANTINGCLUTCH	21	15
COVER/RADIATOR COMP	3	37
COVER/RADIATOR/RH	4	35
	4	36
COVER/RADIATOR/UPPER	3	35
	4	39
COVER/REAR/INPUT	54	27
	55	26
COVER/RELAY	97	5
COVER/RIDGECLUTCH	98	31
COVER/ROTOR/6	101	40
CUSHION	152	29
	153	29
CUSHION,SEAT	79	12
	80	12
CUSHION/ARM/PZ	152	45
	153	45
CUSHION/HOOD	74	2
CUSHION/SEAT/NP	85	8
CYLINDER COMP	60	1
DICTHER/NP	122	15
DIODE/1.5A-3P ASSY	91	10
	92	11
DUCT/DISCHARGE	118	15
DUCTHOSE/REAR/6	119	32
ELEMENT ASSY	4	20
ERRORCODE/NP	148	6
	149	6
FAN	119	26
FAN/COOLING/HG	7	2
FAN/HST	15	15
	16	22
FILTER,FUEL	10	20
	11	16
FILTER/FUEL	10	11
	11	10
FILTER/LINE/09X12X15	70	4
	71	4
FILTER/PORT/11	70	10
	71	10
FINGER/14/G	152	37
	153	37
FLANGEBOLT	2	3
	4	5
FLOAT/CENTER/6	111	1
FLOAT/SIDE/NP	128	1
FORK/CULTCH/LH/ COMP	120	74
FORK/CULTCH/RH/ COMP	120	75
FRAME,SEEDLING	81	3
FRAME/6/NP COMP	119	1
FRAME/6/PZ	137	2
FRAME/DEPTH/6 COMP	110	1
FRAME/LOWER/6 COMP	126	9
FRAME/MAIN/D/E1 COMP	48	1
FRAME/MAIN/G/E1 COMP	49	1
FRAME/ROTOR HEIGHT/6	101	17
FRAME/UPPER/6 COMP	126	6
FROK/PLANT COMP	152	26
	153	26
FRONT/DIFFCASE	30	1
FUCK/SCRAPER/K COMP	81	11
FUSE,BLADE/32	91	6
FUSE,SLOW BLOW	91	16
FUSE/BLADE/32V05A	91	3
	92	3
FUSE/BLADE/32V10A	91	4
	92	4
FUSE/BLADE/32V20A	91	5
	92	5
FUSE/BLADE/32V25A	92	6
FUSE/SLOWBLOW	91	8
	91	9
	91	17
	92	9
	92	10
GASKET	2	15
	123	29
	150	34
	151	24
	152	22
	153	22
GASKET/HOPPER	154	22
GAUGE	148	4
	149	4
GAUGE/FUEL/0-57 ASSY	10	3
	11	3
GEAR,COUNTER	152	8
	153	8
GEAR,SPUR/13	120	10
	120	40
GEAR,STERRING ARM	40	6
GEAR,SUN/LH	152	4

Alpabetical Index

2232-097-100-00

Description	Fig.	Key
GEAR/BEVEL/10	28	1
	29	1
	44	21
	102	19
GEAR/BEVEL/10/FERTIL	54	8
	55	8
GEAR/BEVEL/11	30	4
	43	4
	44	4
GEAR/BEVEL/12/FORGIN	102	7
	102	29
GEAR/BEVEL/15	30	5
	107	15
GEAR/BEVEL/15/NP	33	19
	34	19
GEAR/BEVEL/20	30	10
	43	8
	44	8
	102	15
GEAR/BEVEL/36	43	41
GEAR/BEVEL/44	44	37
GEAR/BEVEL/9	43	27
GEAR/CLUTCH/PLANTING	69	6
GEAR/HST/NP COMP	17	18
	18	18
GEAR/LH	152	10
GEAR/MARKER/LH COMP	129	14
GEAR/MARKER/RH COMP	129	15
GEAR/RH	153	10
GEAR/RIDGECLUTC COMP	98	9
GEAR/ROLLING COMP	113	1
GEAR/ROTOR COMP	101	9
GEAR/SPARSE PLANTING	33	6
	33	7
	33	15
	33	18
	34	6
	34	7
	34	15
	34	18
GEAR/SPUR/10	120	64
GEAR/SPUR/13/24TIMES	107	22
GEAR/SPUR/15/20TIMES	107	23
GEAR/SPUR/15-15	33	16
	34	16
GEAR/SPUR/15-17	31	1
	32	1
GEAR/SPUR/16/18TIMES	107	24
GEAR/SPUR/20	107	19
	107	40
	107	48
GEAR/SPUR/21-28	33	5
	34	5
GEAR/SPUR/22	32	8
GEAR/SPUR/24	31	8
	107	46
GEAR/SPUR/24/18TIMES	107	44
GEAR/SPUR/25/20TIMES	107	43
GEAR/SPUR/26	26	4
	26	5
	27	5
GEAR/SPUR/26/24TIMES	107	42
GEAR/SPUR/27	27	4
GEAR/SPUR/30	31	7
	32	7
GEAR/SPUR/30 COMP	33	3
GEAR/SPUR/31 COMP	34	3
GEAR/SPUR/36	26	2
	27	2
GEAR/SUN/RH	153	4
GEAR/SUPER/58	30	2
GEAR/TURN	28	10
	29	10
GENERATOR	5	6
GRIP	82	5
	83	5
	110	6
	118	29
	127	5
GRIP/07X34	36	9
GROMMET/15X17X05	3	25
	4	9
GROMMET/17X21X3	119	11
GROMMET/20/SEEDING T	133	18
GROMMET/COLUMN	56	8
GUARD/DUCT/6 COMP	118	44
GUARD/RAIL/LH COMP	130	1
GUARD/RAIL/RH COMP	130	2
GUIDE/ADJUSUT	115	13
	116	13
GUIDE/CHANGE/NP	14	6
GUIDE/DICTHER/CENTER	122	16
GUIDE/DICTHER/SIDE	122	17
GUIDE/HARNESS COMP	2	1
GUIDE/HARNESS/A	2	2
GUIDE/HST/NP COMP	12	8
	13	8
GUIDE/ROTOR COMP	101	32
GUIDE/SEEDLING/LH/PZ	136	13
GUIDE/SEEDLING/RH/PZ	136	14
HAB/BRAKE	26	6
	27	6
HANDLE/ADJUST	115	15
	116	15
HANDLE/DELIVERY COMP	147	2
HARNESS,WINKER WIRE/	135	5
HARNESS,WIRE/NO.8	92	22
HARNESS/BATTERY EART	94	2
	95	2
HARNESS/BATTERY/6D/N	95	1
HARNESS/BATTERY/G/NP	94	1
HARNESS/BLOCK SENSOR	117	2
HARNESS/E16	92	18
HARNESS/ENGINE/DF	91	15
HARNESS/HOPPER/ ASSY	117	1
HARNESS/MAIN/6D ASSY	91	1
HARNESS/MAIN/6G ASSY	92	1
HARNESS/REAR/6F ASSY	91	14
	92	17
HARNESS/SEEDLING TAN	93	1
HARNESS/SENCER/PZ	117	6
HARNESS/SWGND	117	20
HARNESS/SWGND/5	10	7
	11	7
HING/HOPPER	154	19
HITCH COMP	103	2
HOLDDER/DISCHARGE	118	32
HOLDDER/DISCHARGE/SI	118	35
HOLDER(FUEL FILTER)	10	21
	11	17
HOLDER,SEEDLONG,UPPE	138	34
HOLDER/CABLE/SEND	126	15
HOLDER/JE/9-9	3	17
	29	16
HOLDER/LEADCAM	108	4

Description	Fig.	Key
HOLDER/LEADCAM	109	2
HOLDER/RESISTANTBAR	137	15
HOLDER/SEEDLING FEED	138	11
HOLDER/SEEDLING HOLD	137	4
	137	7
HOLDER/SHAFT/PLANT	52	9
HOLDER/SPRING	123	18
HOLDER/SPRING COMP	138	8
HOOD/MAGNET	76	2
	77	2
HOOD/NP ASSY	74	1
HOOD/REAR/NP	75	1
HOOK	119	2
HOOK,COUPSULE	120	3
	120	33
HOOK/BONNET/PQ	119	7
HOOK/FUNNEL	120	9
	120	39
HOOK/MARKER	129	27
HOPPER HOOK	154	34
HOPPER/3/LH/6	154	1
HOPPER/3/RH/6	154	2
HOPPER/6Z COMP	121	1
HOPPERGUIDE	154	24
HOPPERNET	121	7
HORN ASSY	89	39
	90	40
HOSE(8X12X1600)	61	10
HOSE,HYDRAULIC/750 A	61	8
HOSE/07X11X1750	11	19
HOSE/07X11X460	11	21
HOSE/08X1160	125	6
HOSE/08X430	125	9
HOSE/08X730	125	8
HOSE/08X850	125	7
HOSE/19X25X80	61	5
HOSE/300	3	13
HOSE/650	21	21
HOSE/AIRCLEANER	4	23
HOSE/AIRCLEANER/FD62	3	45
HOSE/COOLING/LOWER/6	3	27
HOSE/COOLING/UPPER/6	3	28
HOSE/FERTILIZE/930	122	2
HOSE/FERTILIZER/6	122	1
HOSE/FERTILIZER/LOWE	122	7
HOSE/FERTILIZER/STRA	122	6
HOSE/FUEL/1280	11	12
HOSE/FUEL/210	10	14
HOSE/FUEL/340	10	15
	11	11
HOSE/FUEL/660	10	16
HOSE/HYDRAULIC/2150	61	9
HOSE/RADIATOR/ROWER	4	13
HOSE/RADIATOR/UPPER	4	12
HOSE/RUBBER	4	28
	4	29
HST/NP/23 ASSY	16	1
HST/NP/24 ASSY	15	1
HUB,MARKER	129	4
HUB/12X05	115	27
	116	27
HUB/12X08	115	26
	116	26
HUB/21X35X76	101	24
HUB/DIFF/DRIVE	30	13
HUB/PLANTING ARM	152	39
	153	39
HUB/PLANTING/DRIVEN	33	13
	34	13
HUB/PULLEY	16	12
HUB/ROLLER CLUTCH	115	46
	116	45
HUB/ROLLER CLUTCH/NP	115	50
	116	49
HUB/ROTOR/M	100	2
	100	12
INSULATOR	6	2
	89	16
	90	16
INSULATOR/20X280	3	33
INSULATOR/MOUNT/34	2	10
INSULATOR/MOUNT/LH	2	9
JOINT BALL M08LH	14	20
	17	14
	18	14
	106	20
	115	59
	116	58
JOINT BALL M08RH	14	18
	17	12
JOINT BALL M08RH	18	12
	42	1
	106	19
	115	61
	116	60
JOINT,BLOWER	119	30
JOINT/66	122	14
JOINT/BLOWER	119	31
JOINT/BLOWER/LOWER/6	119	35
JOINT/DISCHARGE	118	6
JOINT/FERTLIZE/CENTE	122	12
JOINT/FERTLIZE/LH	122	11
JOINT/FERTLIZE/RH	122	13
JOINT/REAR/1200 COMP	50	1
JOINT/REAR/1200/D	51	1
JOINTT-TYPE 2	125	11
KEY	89	22
	90	22
	107	45
KEY,05X05X18 PLUS	152	11
	153	11
KEY,CARRIER STAR	107	20
KEY,SPROCKET	131	2
	132	2
KEY/05X05X17	33	4
	34	4
KEY/05X05X26	30	12
KEY/05X05X35	15	10
	16	11
KEY/05X05X50	107	51
	108	3
KEY/05X05X51	124	4
KIT/SEAL ASSY	72	2
	73	2
KNOB SET	79	7
	80	7
KNOB/BL	89	19
	90	19
KNOB/GR	89	20
	90	20
KNOB/HYDRAULIC SENSI	89	18
	90	18
KNOCK/SEND/PZ8	107	25
LABEL/A MOUNT OF FER	146	2
LABEL/AIR CLEANER/FD	3	48

Alpabetical Index

2232-097-100-00

Description	Fig.	Key
LABEL/BATTERY/K	143	14
	144	14
LABEL/CAUTION	141	7
	142	7
LABEL/CAUTION/BATTER	141	5
	142	5
LABEL/CAUTION/BELT/	141	2
	142	2
LABEL/CAUTION/BLOWER	146	9
LABEL/CAUTION/CHECK/	141	1
	142	1
LABEL/CAUTION/COVER/	141	4
	142	4
LABEL/CAUTION/DRIVE/	141	8
	142	8
LABEL/CAUTION/FAN/K	141	9
LABEL/CAUTION/FERTIL	146	3
LABEL/CAUTION/HAND	146	8
LABEL/CAUTION/HOPPER	146	4
	146	7
LABEL/CAUTION/JUST/P	141	15
	142	14
LABEL/CAUTION/MARKER	141	11
	142	10
LABEL/CHOKE	90	24
LABEL/CLEANING/CAPSU	146	6
LABEL/CLUTCH/LH/E16	146	12
LABEL/CLUTCH/RH/E16	146	13
LABEL/DEPTH/E16	143	10
	144	11
LABEL/DIESELFUEL/K	144	9
LABEL/DISCHARGE LEVE	146	10
LABEL/DISCHARGE OPER	146	5
LABEL/ENGINE	3	18
LABEL/FERTILIZER/NP/	146	1
LABEL/FRASH	134	3
	135	8
LABEL/FUSE/ENGINE/DF	91	18
LABEL/FUSE/MAIN/M	91	2
	92	2
LABEL/FUSE/REAR/MOTO	92	15
LABEL/GASOLINE/K	143	8
LABEL/HANDLE	146	11
LABEL/HOOD/REAR	143	3
	144	4
LABEL/LEFT/E16	143	11
	144	12
LABEL/MANUAL/CLEANER	143	13
LABEL/OIL LEVEL/FD/E	143	16
LABEL/OIL LEVEL/FD62	3	47
LABEL/OIL/K	143	15
	144	15
LABEL/OILING/NP/E16	143	7
	144	8
LABEL/PANEL/LH/6/E16	89	9
	90	9
LABEL/PANEL/MAIN/6D/	89	8
LABEL/PANEL/MAIN/6G/	90	8
LABEL/PANEL/RH/6/E16	89	10
	90	10
LABEL/PETROL	10	10
LABEL/PLANT INTERVAL	145	1
	145	2
LABEL/RIGHT/E16	143	12
	144	13
LABEL/SEEDLING PICKI	143	9
	144	10
LABEL/SLIDER/LEVER/K	145	3
LABEL/SLOW BLOW	92	16
LABEL/SWITCH	117	15
LABEL/TACT/SWITCH/E1	89	13
	90	13
LABEL/TOTALCLUTCH/K	146	14
LABEL/WARNING	141	12
	142	11
LABEL/WARNING/GAS/K	141	10
	142	9
LABEL/WARNING/JUST/P	141	16
	142	15
LABEL/WARNING/MUFFLE	141	6
	142	6
LABEL/WARNING/PEDAL/	141	3
	142	3
LABEL/WARNING/PLANT	141	17
	142	16
LABEL/WARNING/RADIAT	141	14
	142	13
LABEL/WARNING/SHAFT	141	13
	142	12
LAMP/HEAD/NP ASSY	88	1
LAMP/MASCOT/NP8 ASSY	86	1
LAMP/TURNSIGNAL ASSY	135	1
LATE/REGULATOR COMP	5	13
LEVER	82	4
	83	4
	107	30
LEVER/CHANGE/NP COMP	14	1
LEVER/DEPTH COMP	110	5
LEVER/DISCHARGE	118	27
LEVER/FERTILIZE CLUT	120	76
LEVER/GLIP	14	2
LEVER/HST/NP SET	12	1
	13	1
LEVER/PICKING COMP	127	4
LEVER/TOTALCLUTCH	120	88
LIFT COMP	103	1
LINEMARKER/NP	129	8
LINER/KINGPIN	43	12
	44	12
LINING/HST	12	14
	13	14
LINK/LOWER COMP	65	1
LINK/LOWER/6D COMP	66	1
LINK/UPPER COMP	67	1
LINK/UPPER/6D COMP	68	1
LOCK/BRAKE	57	9
LOCKNUT	152	27
	153	27
MANUAL/OPERATION/NP	148	1
MANUAL/OPERATION/NP8	149	1
MARKER(M)	87	7
MARKER/SIDE/6/LH/NP	87	1
MARKER/SIDE/6/RH/NP	87	2
MAT/CENTER/LH/NP	76	16
	77	16
MAT/CENTER/RH/NP	76	17
	77	17
MAT/FRONT/LH/NP	76	4
	77	4
MAT/FRONT/RH/NP	76	5
	77	5
METAL/CAM/LEAD	108	8
METAL/HST COMP	16	18
METAL/RELIEF/KTMS6	70	3
	71	3

Alpabetical Index

Description	Fig.	Key
METAL/S COMP	123	36
METAL/SLIDE	150	12
	151	5
MIRROR ASSY	84	7
MOLDING/HOOD/LH	143	1
	144	1
MOLDING/HOOD/RH	143	2
	144	2
MOTER	101	4
	113	9
MOTOR/LH ASSY	69	4
	98	3
	129	19
MOTOR/RH ASSY	17	22
	18	22
	129	20
MUFFLER/D COMP	2	14
MUFFLER/FD620 COMP	1	1
NEEDLE	151	15
NETPOCKET	85	2
NIPPLE,GREASE	52	13
	65	5
	66	5
	99	9
NOZZLE/OIL	125	10
NUT	2	16
	3	2
	6	3
	9	12
	12	7
	13	7
	14	5
	14	19
	14	22
	17	13
	17	16
	18	13
	18	16
	41	2
	42	2
	69	18
	81	12
	86	3
	101	38
	104	2
NUT	106	21
	108	20
	112	4
	115	34
	115	41
	115	48
	115	63
	116	34
	116	40
	116	47
	116	62
	117	14
	117	19
	119	5
	119	23
	119	34
	120	89
	122	21
	124	5
	135	4
	152	43
	152	51
	153	43
	153	51
	154	16
	154	32
	154	39
NUT,LOCK PUSH OUT	152	31
	153	31
NUT,SPEED	88	4
NUT,SPEED/4	154	4
	154	21
NUT,SPEED/P4	93	2
NUT/ADJUST	115	12
	116	12
NUT/FLANGE/M10	123	40
NUT/M10	15	13
	16	14
	40	22
	43	22
	54	62
	55	61
	82	13
	83	13
	113	8
NUT/M12	2	11
	38	4
	39	4
	45	5
	46	5
NUT/M14	12	18
	13	18
	62	4
	63	4
NUT/M20	89	34
	90	35
NUT/M4	10	4
	11	4
NUT/M5	3	42
	89	44
	90	45
NUT/M6	10	19
	11	15
	12	22
	12	28
	13	22
	13	28
	17	10
	18	10
	57	18
	67	11
	68	11
	89	41
	89	47
	90	42
	90	48
	92	25
	97	2
	97	4
	106	16
	113	17
	118	10
	133	25
	133	34
	136	12
	137	9
	138	10
	138	15
	138	38
	140	12

Alpabetical Index

2232-097-100-00

Description	Fig.	Key
NUT/M8	14	21
	17	15
	18	15
	40	7
	84	5
	87	4
	106	22
	115	60
	116	59
	131	6
	132	6
NUT/RING	89	23
	90	23
NUT/U/M12	56	11
NUT/WASER/M6/SUS	115	6
	116	6
	118	50
	122	28
	136	17
NUT/WASHER	3	5
	3	26
	3	38
	3	40
	4	38
	10	22
	11	18
	12	10
	13	10
	16	23
	17	4
	18	4
	56	14
	57	6
	79	4
	79	11
	80	4
	80	11
	82	19
	82	21
	83	19
	83	21
	84	9
	84	11
	85	5
	85	9

Description	Fig.	Key
NUT/WASHER	94	3
	95	3
	106	24
	112	5
	126	14
	127	7
	129	28
	136	10
NUT/WASHER/M6	91	27
OILSEAL	151	32
OILSEAL/SDO18243.5/T	138	4
ORIFICESETS/M6X2.0	70	18
	71	18
O-RING	72	3
	73	3
O-RING P6 HS90	70	7
	71	7
O-RING/G35	15	3
	16	3
O-RING/G85	43	17
	44	17
O-RING/OR	152	18
	153	18
O-RING/P10	35	5
	35	11
	35	17
	107	32
	123	41
O-RING/P11	64	2
	70	17
	71	17
	72	8
	72	10
	73	8
	73	10
	150	38
	151	28
O-RING/P14	59	6
	70	6
	71	6
	150	37
	151	27
O-RING/P15	15	8
	16	9
O-RING/P16	70	14

Description	Fig.	Key
O-RING/P16	71	14
O-RING/P18	59	4
	70	16
	71	16
O-RING/P28	152	40
	153	40
O-RING/P30	61	2
O-RING/P39	15	2
	16	2
	59	2
O-RING/P8	21	12
	21	22
ORNAMENT/DIESEL	144	3
ORNAMENT/DX/SHIFT	12	4
	13	4
ORNAMENT/FUSE/MAIN/G	92	8
ORNAMENT/FUSE/REAR	91	13
	92	14
ORNAMENT/ISEKI	74	3
	143	4
	144	5
ORNAMENT/NP60	143	5
	144	6
ORNAMENT/STEERING	143	6
	144	7
PACKING	4	27
	10	9
	11	9
	131	3
	132	3
PACKING/90X105X9	43	14
	44	14
PACKING/CAPSULE/LOWE	120	8
	120	38
PACKING/CAPSULE/UPPE	120	14
	120	44
PACKING/HOPPER	154	13
PACKING/ROHTO	122	4
PACKING/SHUTTER	154	26
PALTE/GEAR	120	4
	120	34
PANEL/DISCHARGE COMP	118	21
PANEL/HOOD/NP	89	7
	90	7
PANEL/MONITOR/NP/E16	89	1

Alpabetical Index

Description	Fig.	Key
PANEL/MONITOR/NP/E16	90	1
PARTITION/NP	3	43
PEDAL/ACCELERATOR/D/	20	4
PEDAL/ACCELERATOR/NP	19	5
PEDAL/BRAKE/NP COMP	57	1
PEDAL/DIFFLOCK COMP	37	4
PIECE/FORK/PK	148	3
	149	3
PIN	14	10
	14	30
	15	7
	16	7
	17	20
	17	33
	18	20
	18	32
	19	4
	20	3
	21	6
	21	19
	28	14
	29	14
	30	7
	37	5
	42	6
	43	2
	44	2
	52	5
	52	8
	54	3
	54	29
	54	63
	54	65
	55	3
	55	28
	55	62
	55	64
	57	13
	57	15
	57	25
	69	14
	79	8
	80	8
	81	6
	91	21
PIN	92	24
	98	29
	106	9
	106	11
	107	4
	111	7
	114	6
	118	24
	118	26
	120	82
	123	6
	138	52
	152	32
	153	32
PIN STRAIGHT	50	3
	51	3
PIN(RORING)	113	7
PIN, TAPPING	133	7
	133	19
PIN,ARM PUSH-OUT	152	34
	153	34
PIN,COTTER/2.5X15/SU	129	7
PIN,COTTER/2.5X20/SU	115	31
	115	45
	116	31
	116	44
	118	34
PIN,COUNTER,GEAR	152	7
	153	7
PIN,FLOAT	106	8
PIN,HAIR (10)	85	7
	111	8
	128	5
PIN,SEAT SET	85	6
PIN,SNAP/6	137	19
	140	5
PIN,SPLIT/2 X20	99	3
PIN,SPLIT/2.5X15	36	3
	36	8
	98	28
	138	51
PIN,SPLIT/2.5X25	41	3
PIN,SPLIT/3 X15	69	20
PIN,SPLIT/3 X20	14	11
	14	27
PIN,SPLIT/3 X20	17	21
	18	21
	19	9
	20	8
	57	2
	57	8
	57	11
	57	23
	65	9
	66	9
	69	21
	106	5
	106	18
	113	5
	130	5
PIN,SPLIT/3 X25	82	10
	83	10
PIN,SPLIT/3 X35	65	12
	66	12
	67	6
	68	6
PIN,SPLIT/3 X40	56	6
	81	13
PIN,SPLIT/3X30/SUS	100	10
	100	15
	114	4
PIN,SPLIT/4 X25	36	5
	36	10
PIN,ST	150	49
	151	40
PIN,STAND	76	14
	77	14
PIN,TRIP-HOOK ROD	17	34
	18	33
PIN/+	154	7
PIN/04X86	154	11
PIN/06X36	52	4
	52	7
PIN/08X27	69	13
PIN/08X32	82	6
	83	6
PIN/08X41	14	29
PIN/10X113	128	4
PIN/10X30	115	38
PIN/10X36	116	37

Alpabetical Index

2232-097-100-00

Description	Fig.	Key
PIN/12X100	82	8
	83	8
PIN/12X82	106	4
PIN/18X211	67	4
	68	4
PIN/18X247	65	10
	66	10
PIN/18X315 COMP	65	3
	66	3
	67	2
	68	2
PIN/18X83 COMP	60	3
PIN/2	54	64
	55	63
PIN/AZECLUTCH	123	47
PIN/COTTER/2.5X35/SU	122	10
PIN/HAIR	113	2
	119	29
PIN/LOCK/STAND	130	3
PIN/LOCKED	152	48
	153	48
PIN/PLANTING/CLUTCH	33	33
	34	33
PIN/SNAP/08	10	2
	11	2
	19	7
	20	6
	76	15
	77	15
	81	7
	82	7
	83	7
PIPE	4	30
PIPING/PUMP/POWER ST	61	7
PISTON	151	6
PISTON/HMS1/021	150	9
PIVOT	84	8
PIVOT/DIAL	115	7
	116	7
PLANTINGARM/K/L ASSY	152	19
PLANTINGARM/K/R ASSY	153	19
PLANTINGSEAL	152	28
	153	28
PLATE	133	8
	133	21
PLATE	137	13
PLATE, SEEDING	148	2
	149	2
PLATE,RUBBER/20X25X0	121	6
PLATE/1R/13X280	133	30
PLATE/ADJUST COMP	115	1
PLATE/ADJUST/D COMP	116	1
PLATE/ADJUSTER/ COMP	18	29
PLATE/ADJUSTER/HST	17	29
PLATE/ARM/ROTOR	101	29
PLATE/CABLE COMP	99	12
PLATE/CABLE/HOLDER	54	61
	55	60
PLATE/CAPSULE	120	20
	120	50
PLATE/CAUTION	4	32
PLATE/CENTER/FLOAT	111	2
PLATE/CLUTCH/LH COMP	138	30
PLATE/CLUTCH/RH COMP	138	31
PLATE/COUNTER/BRAKE/	57	20
PLATE/COUNTER/CHANGE	14	24
PLATE/COVER/ROCK/PQZ	79	9
	80	9
PLATE/FLANGE/HST	12	12
	13	12
PLATE/FOUR BRAKE HOL	26	10
	27	10
PLATE/GUIDE/DEPTH	126	12
PLATE/GUIDE/E16 COMP	136	15
PLATE/GUIDE/PICKING	126	13
PLATE/HOLDER	114	2
PLATE/HOLDER/DEPTH	110	2
PLATE/HOLDER/PLANTIN	127	2
PLATE/HOLDER/ROTOR	101	21
PLATE/HOOK/SEEDLING	133	23
PLATE/I/14X40	118	16
PLATE/I/19X20	81	9
PLATE/I/24X64	101	20
	107	7
	108	7
	109	5
	123	4
	126	4
PLATE/IR/13X211	120	80
PLATE/IR/16X239	119	12
PLATE/IR/16X277	120	81
PLATE/LID	108	11
PLATE/LINK/SENSOR	106	6
PLATE/LOCK/COVER/ENG	79	13
	80	13
PLATE/MAGNET/NP	74	5
PLATE/OUTER COMP	98	19
PLATE/PLANTING CLUTC	33	31
	34	31
PLATE/POTENTIOMETER/	17	7
	18	7
PLATE/REFLECTOR/LH	134	1
PLATE/REFLECTOR/RH	134	2
PLATE/ROD	57	14
PLATE/ROLLING COMP	113	6
PLATE/RUBBER/30X50X0	3	29
PLATE/SEAT/PZ/8	85	4
PLATE/SEEDLING FEED	133	32
PLATE/SEEDLINGTANK	137	11
PLATE/SENSOR/FLOAT	106	15
PLATE/SHUTTERCOVER	154	27
PLATE/SLIDER	136	4
PLATE/SLIDER/HOOK	136	3
PLATE/SOIL COVERING/	122	23
	122	24
	122	25
	122	26
PLATE/SPRING	150	25
	151	43
PLATE/STAY/STEP/FRON	76	19
	77	19
PLATE/STEP/CENTER	76	20
	77	20
PLATE/STOPPER/TANK/8	136	11
PLATE/SWASH	151	4
PLATE/SWASH/HMS1/021	150	11
PLATE/SWITCH/E16/NP	89	38
	90	39
PLATE/VALVE/MOTOR	150	14
	151	9
PLATE/VALVE/PUMP	150	13
	151	8
PLATE/WINKER/LH	135	6
PLATE/WINKER/RH	135	7
PLATE/Z/24X40	115	28

Alpabetical Index

Description	Fig.	Key
PLATE/Z/24X40	116	28
PLUG	107	5
	108	13
	123	31
PLUG(G3/8)	150	35
	151	25
PLUG(PF1/4)	150	36
	151	26
PLUG,CAP/62X6	123	2
PLUG,OIL	54	6
	55	6
PLUG/47	33	11
	34	11
	123	13
PLUG/BOA/42	102	5
	102	27
PLUG/SCREW/SEAL	21	10
	21	13
	43	32
	44	27
	54	7
	55	7
	70	9
	70	15
	71	9
	71	15
	150	39
POPPET(CHECK/1.6)	151	23
POPPET/CHECK	150	32
	151	22
POPPET/CHECK/1.6	150	33
POPPET/RELIEF	150	31
	151	21
PRESSURECAP	4	4
PULLEY,TENSION	7	6
PULLEY,TENSION/70BS	9	8
PULLEY/VB115/VA106	7	1
PULLEY/VB133/G	15	9
PULLEY/VC125	16	10
PULLEY/VC140	8	1
PUMP/FUEL ASSY	10	18
	11	14
PUMP/OIL SET	125	1
PUMP/PZ	59	1
PUSHINGOUTNUT/E	152	30
PUSHINGOUTNUT/E	153	30
RADIATOR ASSY	4	1
RADIATOR/G ASSY	3	19
RADIATOR/SUB ASSY	4	2
RAIL/LOWER/6E COMP	133	5
RAIL/PLANTING/6	105	1
RAIL/SEEDLING TANK U	133	11
RAIL/SEEDLING TANK/I	133	17
RAIL/TANK/NP6/E16	136	1
RAKE/CENTER	114	7
RAKE/CENTER COMP	114	1
REGULATOR/Z ASSY	5	15
RELAY ASSY	91	12
	91	23
	92	13
RELAY,TWIN	91	11
	92	12
RELAY/4P ASSY	91	24
	92	23
RELAY/FLASHER ASSY	89	45
	90	46
REMAINDER/SHOOT COMP	118	20
RING, SNAP	115	56
	116	55
	120	23
	120	30
	120	53
	120	60
	120	69
	138	24
	154	12
RING,SNAP/12 C	98	8
	101	36
	123	49
	129	16
RING,SNAP/14 C	30	8
RING,SNAP/15 C	7	7
	9	9
	69	8
	98	12
	101	11
RING,SNAP/17 C	17	27
	18	27
	102	12
	102	22
RING,SNAP/17 C	102	32
	102	39
	150	48
	151	39
RING,SNAP/18 C	107	27
RING,SNAP/20 C	28	12
	29	12
	54	39
	55	38
	107	11
	123	10
	150	18
	150	22
	151	29
RING,SNAP/22 C	31	9
	32	9
RING,SNAP/25 C	54	11
	54	42
	55	11
	55	41
	115	53
	116	52
	130	7
RING,SNAP/28 C	54	16
	55	15
RING,SNAP/30 C	150	41
	151	38
RING,SNAP/32 C	50	2
	51	2
	151	31
RING,SNAP/35 C	101	26
	123	24
RING,SNAP/40 C	40	4
	53	3
	102	11
	102	17
	102	23
	102	35
	102	38
RING,SNAP/47 C	33	10
	34	10
	52	11
	54	38
	55	37
	107	10

Alpabetical Index

2232-097-100-00

Description	Fig.	Key
RING,SNAP/47 C	123	14
	150	40
	151	30
RING,SNAP/52 C	33	23
	34	23
	43	6
	44	6
	54	10
	55	10
RING,SNAP/8 E	98	17
RING,SNAP/R55	16	21
	107	17
RING,SNAP/R62	33	24
	34	24
	40	12
	54	34
	55	33
	101	27
RING,SNAP/R72	28	3
	29	3
	43	30
	44	24
RING,SNAP/R85	43	11
	44	11
RING,SNAP/S45	43	10
	44	10
RING,STOP/30	43	44
	44	41
RING/O	30	18
RING/SNAP	138	5
	150	8
RIVET	87	10
	119	36
RIVET,POP	133	6
RIVET/BLIND/0	154	9
	154	33
RIVET/BLIND/STEEL/3.	76	3
	77	3
RIVET/BLIND/STEEL/4X	74	6
ROD,ADJUST/90	9	11
ROD/ANGLE	106	17
ROD/BRAKE/LOWER/NP	57	24
ROD/BRAKE/UPPER/NP	57	12
ROD/CHANGE/LOWER/NP	14	26
ROD/CHANGE/NP COMP	14	17
ROD/CLUTCH COMP	42	4
ROD/CLUTCH/ROTOR	99	4
ROD/COUNTER/DISCHARG	118	30
ROD/DIALADJUST	115	9
	116	9
ROD/DISCHARGE	118	25
ROD/DRIVE/NP COMP	115	58
	116	57
ROD/FLOAT	106	23
ROD/HST/NP COMP	17	11
	18	11
ROD/LAKE COMP	114	5
ROD/LINK	106	10
ROD/M8X195	112	3
ROD/MARKER/WATER WHE	129	3
ROD/PLANTING	36	2
	36	7
ROD/PLANTING CLUTCH/	69	16
ROD/SHUTTER	118	18
ROD/TIECOMP	41	1
ROHTO	122	3
ROLL	120	15
	120	45
ROLLER	65	8
	66	8
ROLLER(ROTARY)	100	8
ROLLER,SEEDLING TANK	126	8
ROLLER,SEEDLING,UPPE	138	26
ROLLER/SEEDLING	138	22
ROLLER/SEEDLINNG	138	21
ROLLERCLUTCH/HF1816	138	3
ROTARY PLANTING/K/LH	131	1
ROTARYPLANTING/K/RH	132	1
ROTOR/36/M	100	4
	100	14
ROTOR/72/M	100	3
	100	13
SCREW	75	2
	89	29
	90	30
	115	16
	116	16
	117	11
	119	8
	120	5
SCREW	120	35
	121	5
	154	28
SCREW M3X20	107	31
SCREW SENS/M5X16	28	17
	29	18
SCREW,SP/M4X12	133	29
SCREW,TAPPING	117	5
SCREW,TAPPING/M3	119	3
SCREW/04	115	20
	116	20
SCREW/6	122	22
SCREW/FLAT	136	16
SCREW/M3X	119	22
SCREW/M3X16	12	31
	13	31
	14	14
	36	15
	118	39
	140	9
SCREW/M4X12	154	36
SCREW/M5X25	89	43
	90	44
SCREW/SET	115	49
	116	48
	124	3
SCREW/SOCKET	70	20
	71	20
	150	50
	151	41
SCREW/SP	3	41
	12	3
	12	20
	13	3
	13	20
	17	6
	18	6
	40	17
	67	9
	68	9
	69	10
	98	22
	101	13
	106	14
	113	15

Description	Fig.	Key
SCREW/SP	129	24
	133	28
	152	24
	153	24
SCREW/TAPPING	85	3
	133	27
	133	31
	154	31
SCREW/TAPPING/6X16	89	28
	90	29
SCREW/TAPPING/M4X12	120	22
	120	52
SCREW/TRUSS/M8X40	74	4
SEAL,OIL	107	39
	123	50
	152	6
	152	14
	152	25
	153	6
	153	14
	153	25
SEAL,OIL 305514	43	47
	44	44
SEAL,OIL TC122207	33	34
	34	34
	35	2
	35	9
	35	15
	40	15
	107	29
SEAL,OIL/SC17306	123	37
SEAL,OIL/SDD7/204	54	31
	54	40
	55	30
	55	39
SEAL,OIL/TC12257	54	43
	55	42
SEAL,OIL/TC15307	120	18
	120	48
SEAL,OIL/TC17307	107	38
SEAL,OIL/TC17357	54	26
	55	25
	123	23
SEAL,OIL/TC17408	53	4
SEAL,OIL/TC20307	120	11

Description	Fig.	Key
SEAL,OIL/TC20307	120	41
SEAL,OIL/TC20407	31	3
	32	3
SEAL,OIL/TC20477	28	13
	29	13
	107	12
	123	12
	150	44
	151	34
SEAL,OIL/TC25357	26	13
	27	13
	33	30
	34	30
	37	2
	115	54
	116	53
SEAL,OIL/TC25457	107	50
SEAL,OIL/TC25478	28	9
	29	9
SEAL,OIL/TC255210	43	7
	44	7
SEAL,WHEEL SHAFT	54	55
	55	54
SEAL/47	150	45
	151	35
SEAL/DUST/92X104X8	43	15
	44	15
SEAL/OIL	33	25
	34	25
	40	13
	54	35
	55	34
	101	28
	102	13
	102	18
	102	20
	102	33
	102	40
	150	42
	150	43
	151	33
SEAT/NP ASSY	85	1
SEEDLING FRAME/E16/L	81	1
SEEDLING FRAME/E16/R	81	2
SEEDLINGTANK	133	2

Description	Fig.	Key
SEEDLINGTANK/6E COMP	133	1
SEEDLINGTANK/EXTEND	139	1
SENSOR ARM/LEVER/HST	13	21
SENSOR,HOPPPER	117	10
SENSOR/ANGLE/110/R	12	19
	13	19
	67	8
	68	8
	106	13
	113	14
	129	23
SENSOR/ANGLE/330	40	16
	98	21
SENSOR/ANGLE/75 ASSY	17	5
	18	5
	69	9
	101	12
SENSOR/CLOGGED/NP	117	7
SENSOR/SLOPE ASSY	107	52
SENSOR/SPEED/GEAR	28	16
	29	17
SENSOR/STOP SWITCH	133	12
SENSORARM/HST/NP	17	9
	18	9
SENSORARM/HSTLEVER	12	21
SENSORARM/LINK	67	10
	68	10
SENSORARM/ROLLING	113	16
SHAFT	138	25
SHAFT/6/K	137	17
SHAFT/CENTER ROTOR/D	102	6
	102	28
SHAFT/CHANGE	26	1
	27	1
	33	1
	34	1
SHAFT/CHANGE/SUB	31	4
	32	4
SHAFT/COUNTER COMP	24	1
	115	32
	116	32
SHAFT/COUNTER/41-10	54	49
SHAFT/COUNTER/41-9	55	48
SHAFT/COUNTER/8 COMP	25	1
SHAFT/COUNTER/SEND	107	36

Alpabetical Index

Description	Fig.	Key
SHAFT/DIFF	30	3
SHAFT/DIFFLOCK/NP	37	1
SHAFT/DISCHARGE	120	26
	120	56
SHAFT/DISCHARGE/6	118	31
SHAFT/DRIVE/6	124	2
SHAFT/DRIVEN	33	8
	34	8
SHAFT/FERTILIZE	54	36
	55	35
SHAFT/FERTILIZE/6LH	120	63
SHAFT/FERTILIZE/6RH	120	62
SHAFT/FORK/PLANTING/	152	44
	153	44
SHAFT/FOUR WHEEL BRA	26	12
	27	12
SHAFT/FRONTDRIVE/LH	30	11
SHAFT/FRONTDRIVE/RH	30	17
SHAFT/FRONTWHEEL	43	42
	44	39
SHAFT/INPUT COMP	22	1
SHAFT/INPUT/8D COMP	23	1
SHAFT/KINGPIN	43	33
SHAFT/KINGPIN/8	44	28
SHAFT/MOTOR	151	11
SHAFT/MOTOR/021 SET	150	19
SHAFT/MOTOR/HMS1/021	150	20
SHAFT/OUTPUT/ROTOR	54	23
	55	22
SHAFT/PLANT/FRONT/12	52	1
SHAFT/PLANT/G COMP	52	2
SHAFT/PLANT/OUT	33	20
	34	20
SHAFT/PLANT/REA COMP	52	6
SHAFT/PLANTING ARM/L	152	9
SHAFT/PLANTING ARM/R	153	9
SHAFT/PLANTING/DRIVE	123	7
	123	8
	123	9
SHAFT/PLANTING/IN	107	8
SHAFT/PLANTINGARM	123	32
SHAFT/PUMP	151	10
SHAFT/PUMP/021 SET	150	15
SHAFT/PUMP/HMS1/021	150	16
SHAFT/REAR/WHEEL/6	54	52
SHAFT/REAR/WHEEL/8	55	51
SHAFT/REARCLUTCH/N	28	7
	29	7
SHAFT/RIDGE CLUTCH/C	98	5
SHAFT/ROLLER CLUTCH/	138	2
SHAFT/ROTOR/6	100	11
SHAFT/ROTOR/6/CENTER	100	1
SHAFT/ROTOR/FRONT	102	9
	102	31
SHAFT/ROTOR/FRONT/8	99	6
SHAFT/ROTOR/REAR/LH	102	14
SHAFT/ROTOR/REAR/NP	99	5
SHAFT/ROTOR/REAR/RH	102	36
SHAFT/SEEDLINGFEED/2	138	17
SHAFT/SEEDLINGFEED/6	138	16
SHAFT/SENCER/STEARIN	40	14
SHAFT/SEND	107	14
SHAFT/STEARING/OUT	40	9
SHAFT/STEERING/IN	40	1
SHAFT/STEERING/NP	56	5
SHEET/HOPPER/6	154	5
SHEET/HOPPER/6/LOWER	154	20
SHEET/HOPPER/6/REAR	154	23
SHFTER/CHANGE/DRIVE	35	1
SHIFTER/CHANGE/NP	14	28
SHIFTER/CLUTCH/REVER	33	29
	34	29
SHIFTER/FERTILIZER	54	41
	55	40
SHIFTER/PLANTING/MEI	35	8
SHIFTER/PLANTING/SUB	35	14
SHIFTER/SEND COMP	107	28
SHIM,SAFETY CLUTCH	107	41
SHIM/1.0	150	10
SHIM/1.8	151	7
SHIM/35X47X0.2	107	13
SHIM/MUFFLER	2	24
	2	25
SHROUD/FD620/E18	3	32
SHROUDFAN ASSY	4	6
SHUTTER	154	25
SHUTTER/DISCHARGE	120	27
	120	57
SIFTER/CLUTCH	53	1
SLIDER PLATE(E12)	133	15
SNAPRING	101	16
	115	8
	115	10
	116	8
	116	10
SOCKET	88	3
SOREN/SP/M6X25	152	3
	153	3
SORING	89	17
	90	17
SPAC/M8	84	6
SPACER/OUTER/RH	137	5
SPRING	82	9
	83	9
	87	3
	115	19
	116	19
	120	90
	123	21
SPRING,BELT/4	138	29
SPRING,BELT/8	138	28
SPRING,HC030	130	4
SPRING,HE071	19	8
	20	7
SPRING,TENSION	81	8
SPRING/8	89	4
	90	4
SPRING/BRUSH/FG	119	27
SPRING/HC013	123	48
SPRING/HC017	64	4
SPRING/HC021	107	34
	150	30
	151	20
SPRING/HC024	150	6
SPRING/HC028	33	28
	34	28
SPRING/HC029	129	6
SPRING/HC030	150	29
	151	19
SPRING/HC032	69	19
SPRING/HC033	54	14
	55	13
SPRING/HC034	138	44
SPRING/HC037	152	16
	153	16

Description	Fig.	Key
SPRING/HC039	54	13
SPRING/HC041	30	15
SPRING/HC042	17	25
	18	25
SPRING/HC043	123	17
SPRING/HC044	120	67
SPRING/HC050	19	2
SPRING/HC051	150	7
SPRING/HC053	43	34
	44	29
	151	18
SPRING/HC054	44	30
SPRING/HC058	57	16
SPRING/HC086	152	33
	153	33
SPRING/HC093	120	66
SPRING/HC100	35	3
SPRING/HC128	120	68
SPRING/HE060	98	26
SPRING/HE070	57	19
SPRING/HE079	118	11
SPRING/HE089	9	10
SPRING/HE104	138	7
SPRING/HE110	7	9
SPRING/HE114	69	15
SPRING/HE232	112	1
SPRING/HE240	101	39
SPRING/HE385	112	2
SPRING/HT012	57	10
SPRING/HT013	123	44
SPRING/HT015	54	48
	55	47
SPRING/HT017/S	128	6
SPRING/HT018	106	12
SPRING/HT019/LH/Z	120	28
SPRING/HT019/RH/Z	120	58
SPRING/HT020	79	10
	80	10
SPRING/HT020/LH	129	17
SPRING/HT020/RH	129	18
SPRING/HT025/CHANGE	14	3
SPRING/HT025/HST	12	5
	13	5
SPRING/MARKER/REAR/L	129	9
SPRING/MARKER/REAR/R	129	10
SPRING/SEND/PZ8	107	26
SPRING/SHIFTER/P	35	6
	35	12
	35	18
SPRING/STOPSWITCH	140	6
SPROCKET/12/DRIVE	54	20
	55	19
SPROCKET/12/DRIVEN	54	22
	55	21
SPROCKET/18	123	33
SPROCKET/CLUTCH	123	19
STAY,6/M COMP	137	1
STAY/AIRCHAMBER COMP	118	7
STAY/AIRCLEANER COMP	4	17
STAY/ANGLE	106	1
STAY/AZECLUTCH COMP	123	42
STAY/BLOWER COMP	119	28
STAY/CENTERFLOA COMP	111	4
	111	5
STAY/DUCT GUARD/6/LH	118	42
STAY/DUCT GUARD/6/RH	118	43
STAY/DUCT/REAR COMP	119	14
STAY/DUCT/REAR/LH	119	15
STAY/DUCT/REAR/RH	119	17
STAY/FLOAT/CENTER	106	3
STAY/FLOAT/SIDE COMP	128	2
STAY/FRONTAXLE	43	20
STAY/FUSEBOX COMP	92	20
STAY/HINGE/PZ	79	5
	80	5
STAY/HOPPER COMP	121	2
STAY/LEVER COMP	36	11
STAY/MIRROR/K	84	2
STAY/RADIATOR/L COMP	4	7
STAY/RADIATOR/R COMP	4	8
STAY/RADIATOR/UPPER/	3	22
	3	23
STAY/RAIL COMP	136	2
STAY/ROTOR	101	18
STAY/ROTOR/CENTER	100	6
STAY/SEEDLING FRAME/	82	1
	82	2
	82	11
	83	1
	83	2
STAY/SEEDLING FRAME/	83	11
STAY/SEEDLING TANK/C	126	3
STAY/SEEDLING TANK/L	126	1
STAY/SEEDLING TANK/R	126	2
STAY/SENSOR/SLOPE	107	54
STAY/SENSOR/STEARING	40	18
STAY/SLIDER/OUTER	136	6
STAY/STOPSWITCH COMP	140	1
STAY/SWITCH COMP	117	21
STAY/SWIVEL SEEDLING	81	5
STAY/TANK COMP	125	2
STEERING/NP ASSY	56	9
STEP/ASSIST/NP COMP	78	1
STEP/CENTER/LH/D/NP	77	7
STEP/CENTER/LH/NP	76	7
STEP/CENTER/RH/D/NP	77	10
STEP/CENTER/RH/NP	76	10
STEP/FRONT/NP	76	1
	77	1
STEP/SEETHROUGH/NP	76	8
	76	11
	77	8
	77	11
STOP/SAFETY/DRIVE	123	15
STOP/SAFETY/DRIVEN	123	16
STOPPER,SEED/6/K	137	3
STOPPER/ROLLING/6V	104	1
STOPPER/SEEDLING FEE	138	13
SUTTER	118	5
SUTTERCHANGE	118	4
SWITCH ASSY	133	26
SWITCH ASSY	12	29
	13	29
	14	12
	36	13
	118	37
	140	7
SWITCH,PUSH	117	16
SWITCH,SAFETY ASSY	89	33
	90	34
SWITCH,STARTER	90	21
SWITCH/CONTROLLER/E1	89	11
	90	11
SWITCH/CONTROLLER/NP	89	12
	90	12

Alpabetical Index

2232-097-100-00

Description	Fig.	Key
SWITCH/MAIN ASSY	89	21
SWITCH/MOMENTARY/G/W	89	14
	90	14
SWITCH/VR ASSY	89	15
	90	15
SWITCH/VR/NP ASSY	89	24
	90	25
SWITVH/COMBI	89	32
	90	33
TANK,RESERVE	4	25
TANK/FUEL/NP	10	1
	11	1
TAPBOLT/6X20	47	2
	76	9
	76	12
	77	9
	77	12
TAPPINGSCREW/M5X12	17	23
	18	23
	69	5
TAPPINGSCREW/M5X16	98	4
	129	21
TIGHTNER/SUPPORT FRA	123	27
TIRE/FRONT/650 COMP	45	1
TIRE/FRONT/650/ COMP	46	1
TORQUEGENERATOR	72	1
	73	1
TUBE/100	101	7
	113	12
TUBE/18X24	53	8
TUBE/DISCHARGE/6	118	1
TUBE/HOSE/6	122	9
TUBE/MARKER/6L COMP	129	1
TUBE/MARKER/6R COMP	129	2
TUBE/MIRROR/K COMP	84	1
TUBE/ROLLER	100	9
TUBE/SEEDLING FRAME/	82	17
	83	17
TUBE/SEEDLING PICKIN	127	1
UNUT/M8/CAP	89	6
	90	6
VALVE	4	21
VALVE/KTMS6 SET	70	1
VALVE/KTMS6/8 SET	71	1
VALVE/PFV/15ASSY	70	2
VALVE/PFV/15ASSY	71	2
VALVE/RELIEF/08 ASSY	70	13
	71	13
WASHER	2	23
	5	12
	7	8
	9	6
	38	5
	39	5
	69	7
	69	17
	101	10
	101	15
	101	35
	103	8
	115	5
	115	22
	115	30
	115	39
	115	42
	116	5
	116	22
	116	30
	116	38
	116	41
	117	12
	118	48
	119	10
	120	83
	122	20
	154	8
	154	10
	154	14
	154	30
	154	35
	154	37
WASHER / M16	17	26
	18	26
WASHER / M6	52	14
	54	69
	55	68
	65	6
	66	6
	98	30
	99	10
WASHER / M6	137	18
	140	4
WASHER /M12	2	13
	138	23
WASHER,PL/M 4	10	6
	11	6
	74	7
	133	9
	133	20
WASHER,PL/M 8	12	6
	13	6
	14	4
	15	19
	17	3
	17	35
	18	3
	18	34
	19	6
	20	5
	42	5
	57	5
	65	7
	66	7
	84	4
	87	6
	89	3
	90	3
	99	2
	130	6
	138	50
WASHER,PL/M10	108	18
WASHER,PL/M14	12	17
	13	17
WASHER,PL/M18	65	11
	66	11
	67	5
	68	5
WASHER,PULLEY	131	4
	132	4
WASHER,SP/M 3	12	32
	13	32
	14	15
	36	16
	118	40
	140	11

Description	Fig.	Key
WASHER, SP/M 4	10	5
	11	5
WASHER, SP/M 5	101	6
	113	11
WASHER, SP/M 6	67	12
	68	12
	113	18
WASHER, SP/M 8	5	5
	5	11
	14	23
	15	18
	16	17
	17	17
	18	17
	21	5
	21	18
	42	3
	70	21
	71	21
	104	3
	115	62
	116	61
	117	18
	131	5
	132	5
	135	3
WASHER, SP/M10	2	7
	5	2
	5	8
	6	5
	9	3
	15	6
	15	12
	16	6
	16	13
	41	4
	43	19
	43	24
	44	19
	54	60
	55	59
	82	15
	83	15
	103	7
	108	19

Description	Fig.	Key
WASHER, SP/M12	2	12
	45	3
	46	3
	54	57
	55	56
	72	6
	73	6
WASHER, STAND SPRING	56	7
WASHER, TENSION	53	6
	123	5
WASHER, WIRE TENSION	2	21
	3	12
	54	46
	55	45
	57	17
	123	45
	129	5
	138	40
WASHER/05X16X01	115	18
	116	18
WASHER/07X16X03	140	2
WASHER/07X18X1.5	121	3
WASHER/09X11X1.6	64	3
WASHER/09X18X03	152	49
	153	49
WASHER/09X22X02	98	27
WASHER/09X30X4.5	43	36
	44	32
WASHER/11X24X3	15	11
WASHER/11X46X06	7	3
	8	5
WASHER/12X30X01	138	6
WASHER/13X30X01	120	70
WASHER/15X23X01	98	11
WASHER/15X40X05	62	3
	63	3
WASHER/16X25X0.4	120	19
	120	49
WASHER/16X46X5	43	38
	44	34
WASHER/18X34X02	30	16
WASHER/18X45X1	120	16
	120	46
WASHER/19X24X2	150	5
WASHER/21X45X01	120	13

Description	Fig.	Key
WASHER/21X45X01	120	43
WASHER/25X30X1	151	42
WASHER/25X35X01	115	52
	116	51
WASHER/27X36X1	54	12
	55	12
WASHER/LOCK	2	17
	2	20
	3	3
	3	11
	115	4
	115	17
	115	21
	115	33
	115	40
	116	4
	116	17
	116	21
	116	33
	116	39
	117	9
	117	13
	118	47
	119	4
	119	9
	120	6
	120	21
	120	36
	120	51
	121	4
	122	19
	152	50
	153	50
	154	15
	154	29
	154	38
WASHER/M10	2	8
	5	9
	6	4
	43	25
	82	16
	83	16
	103	4
	113	4
	115	44

Alpabetical Index

2232-097-100-00

Description	Fig.	Key	Description	Fig.	Key	Description	Fig.	Key
WASHER/M10	116	43						
WASHER/M12X20X01	98	7						
	115	11						
	116	11						
WASHER/M18	152	46						
	153	46						
WASHER/M3	12	33						
	13	33						
	14	16						
	36	17						
	118	41						
	140	10						
WEIGHT/FERTILIZER HO	122	8						
WHEEL/950/LH COMP	38	1						
WHEEL/950/RH COMP	38	2						
WHEEL/THICK RIM/900/	39	1						
	39	2						
WIRE BAND(92)	101	8						
	113	13						
WIRE,LEAD	91	22						
WIRE,SEEDING GUIDE/P	136	18						
WRENCH,PLUG	148	5						
	149	5						