동양승용이앙기
PD60

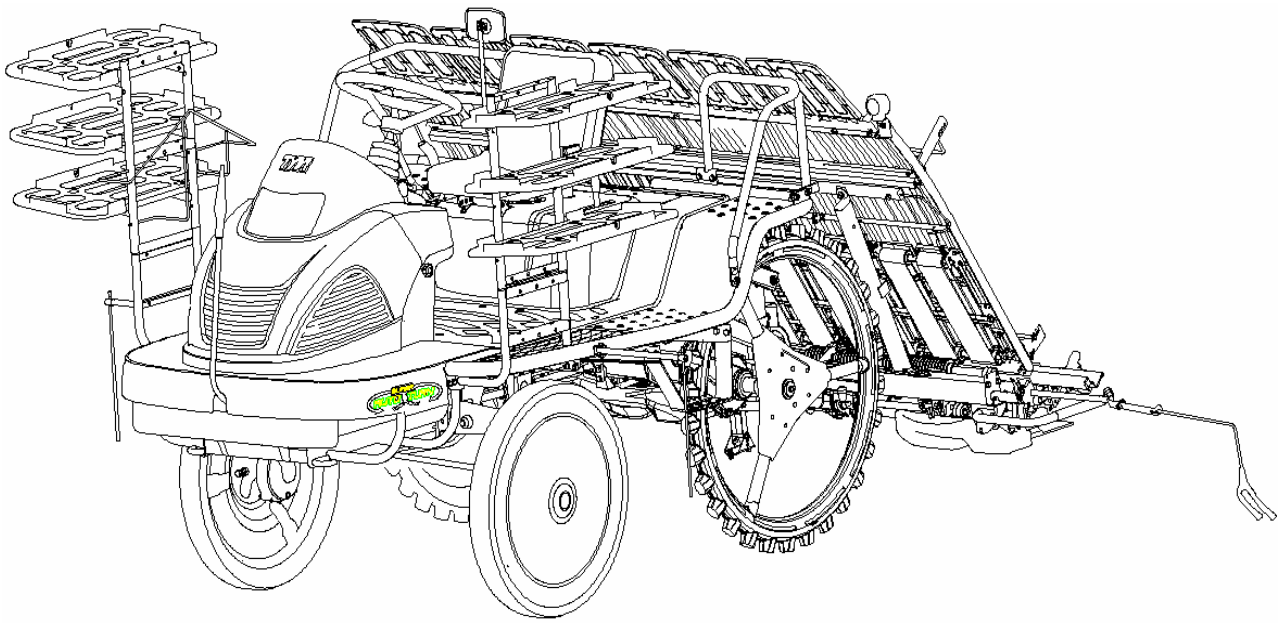

부품목록

목 록

엔 진

E-2-1 CYLINDER HEAD (GX620K1) ----------01
E-3-1 CYLINDER BARREL (GX620K1) ----------03
E-6-1 CRANKCASE COVER (GX620K1) ----------05
E-7 CRANKSHAFT ----------07
E-8-1 PISTON (GX620K1) ----------09
E-9-1 CAMSHAFT (GX620K1) ----------11
E-12-1 FAN COVER (GX620K1) ----------13
E-14-2 CARBURETOR (GX620K1) ----------15
E-15-4 AIR CLEANER (5) ----------17
E-18-1 FUEL PUMP (GX620K1) ----------19
E-20 IGNITION COIL ----------21
E-21-1 STARTER MOTOR (GX620K1) ----------23
E-22-4 CONTROL (5)----------25
E-23 CONTROL BOX ----------27
E-28-1 LABEL (GX620K1) ----------29
E-29 TOOL ----------31

본 기

101 엔진프레임----------33
105 풀리&휀----------35
111 연료탱크----------37
112 소음기----------39
117 전조등스테이----------41

201 앞 차축----------43
202 입력축----------45
203 변속기어(1)----------47
204 변속기어(2)----------49
205 차동기어----------51
207 주간축----------53
208 식부출력축----------55
211 변속레버----------57
213 식부클러치----------59
214 디프록로드----------61
230 스티어링기어----------63
250 HST&유압펌프----------65
251 HST레버----------67
252 부변속 연결로드----------69
301 조향핸들----------71
307 조향 로드----------73
308 자동선회 로드----------75
309 사이드클러치캠----------77
311 최종케이스기어----------79
320 뒷차축----------81
321 리어입력축 ----------83
322 롤링서포트----------85
324 조향클러치축(우)----------87
325 후차축기어----------89
327 조향클러치축(좌)----------91
328 중간연결축----------93
331 브레이크----------95
333 브레이크로드----------97

351 전륜 ----------99
352 후륜----------101
402 배관----------103
403 HST탱크----------107
408 실린더----------109
415 상하링크----------111
420 모터플레이트----------113
501 전프레임----------117
502 메인프레임----------119
503 후방가이드----------121
505 발판(메인) ----------123
506 본니트----------125
511 시트----------127
523 센터마커----------129
525 사이드마커----------131
526 마커콘트롤----------133
531 스위치판넬----------135
532 배터리----------137
582 묘탑재대----------139
583 백밀러----------141
601 식부연결축----------143
603 식부부 기어박스----------145
605 식부기어(1)----------147
606 식부기어(2) ----------149
608 이송캠----------151
609 횡이송체인지레버----------153
610 연결축----------155

611 식입간지지케이스 ---------- 157
612 식입간 구동체인 ---------- 159
615 각조클러치 ---------- 161
701 식부연결히치 ---------- 163
704 묘탱크지지 ---------- 165
705 각조클러치레버 ---------- 167
707 줄치기마커 ---------- 169
711 이앙깊이조절 ---------- 171
712 유압감지 ---------- 173
716 센터 플로트 ---------- 175
717 사이드플로트 ---------- 177
721 전판 ---------- 179
723 묘취량조절 ---------- 181
801 묘탱크 ---------- 183
803 묘이송벨트 ---------- 185
804 묘종이송 ---------- 187
805 묘이송축받침 ---------- 189
806 묘누르게 ---------- 191
807 마커케이블 ---------- 193
808 각조클러치케이블 ---------- 195
809 초크케, 스로틀케이블 ---------- 197
810 이송정지, 조절케이블 ---------- 199
811 감지케이블 ---------- 201
812 엔진전기회로도 ---------- 203
813 주배선 ---------- 205
814 식부부전기회로도 ---------- 207
815 마크 ---------- 209
816 마크상세 ---------- 211

엔 진

Engine

PDF Complete
Your complimentary use period has ended. Thank you for using PDF Complete.
Click Here to upgrade to Unlimited Pages and Expanded Features

备　　忘

E-2-1	CYLINDER HEAD (GX620K1)	PD60	Year / Month 2009 / 02	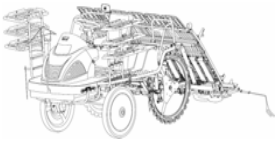

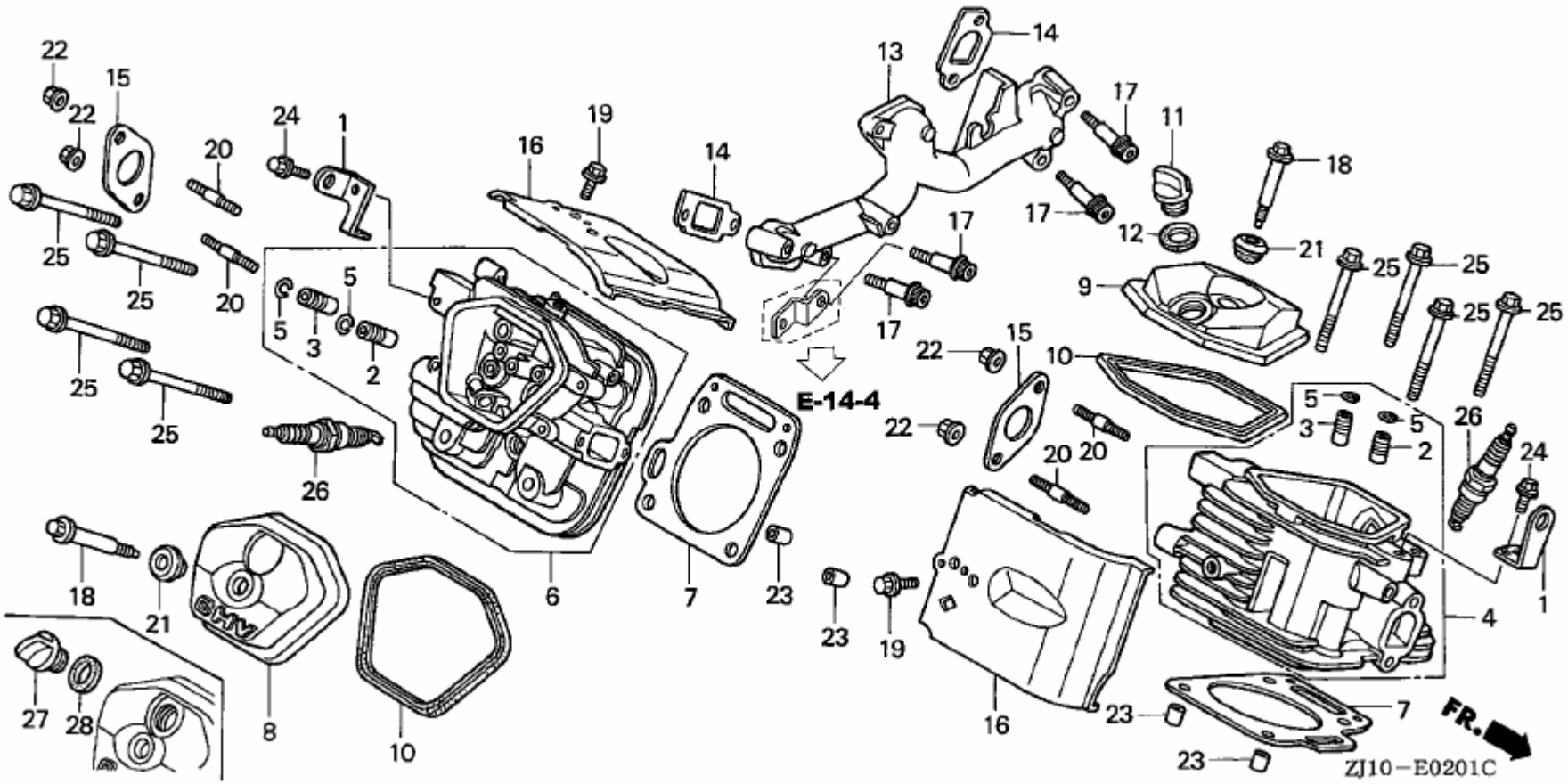

NOTE	

E-2-1	CYLINDER HEAD（GX620K1）	PD60	Year / Month 2009 / 02

图号	序号	件号	名称	PART NAME	数量	规格	备注	备忘
E-2-1	1	11911ZJ1840		HANGER,ENGINE	2			
E-2-1	2	12204ZE2306		GUIDE,IN.VALVE(O.S.)	2			
E-2-1	3	12205ZJ1405		GUIDE,EX.VALVE(O.S.)	2			
E-2-1	4	12210ZJ1840		HEAD COMP.CYLINDER(1)	1			
E-2-1	5	12216ZE2300		CLIP,VALVE GUIDE	4			
E-2-1	6	12220ZJ1840		HEAD COMP.CYLINDER(2)	1			
E-2-1	7	12251ZJ1841		GASKET,CYLINDER HEAD	2			
E-2-1	8	12311ZJ1840		COVER,HEAD	1			
E-2-1	9	12314ZJ1840		COVER,HEAD FILLER	1			
E-2-1	10	12391ZE2020		PACKING,HEND COVER	2			
E-2-1	11	15611MB0000		CAP,OIL GILLER	1			
E-2-1	12	15625ZJ1840		PACKING,OIL GILLER CAP	1			
E-2-1	13	17101ZJ1840		MANIFOLD,INTAKE	1			
E-2-1	14	17151ZJ1841		GASKET,INTAKE MANIFOLD	2			
E-2-1	15	18333ZE3800		GASKET.EX.PIPE	2			
E-2-1	16	19682JZ1840		SHROUD,HEAD	2			
E-2-1	17	90011ZJ1841		BOLT,SOCKET,8X45	4			
E-2-1	18	90014ZE2000		BOLT,HEAD COVER	2			
E-2-1	19	90014952000		BOLT,FLANGE,6X14(CT200)	2			
E-2-1	20	90018ZJ1840		BOLT,STUD,8X22	4			
E-2-1	21	90441ZE2010		WASHER COMP.,HEAD COVER	2			
E-2-1	22	9405008000		NUT FLANGE,8MM	4			
E-2-1	23	9430112200		PIN,DOWEL,12X20	4			
E-2-1	24	957010802000		BOLT FLANGE,8X20	2			
E-2-1	25	957011008000		BOLT,FLANGE,10X80	8			
E-2-1	26	9807952876		PLUG,SPARK(BPR2ES)	2			
E-2-1	27	15611MBO000		CAP,OIL FILLER	1			
E-2-1	28	15625ZJ1840		PACKING,OIL FILLER CAP	1			

NOTE	

E-3-1	CYLINDER BARREL (GX620K1)	PD60	Year / Month 2009 / 02	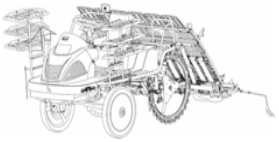

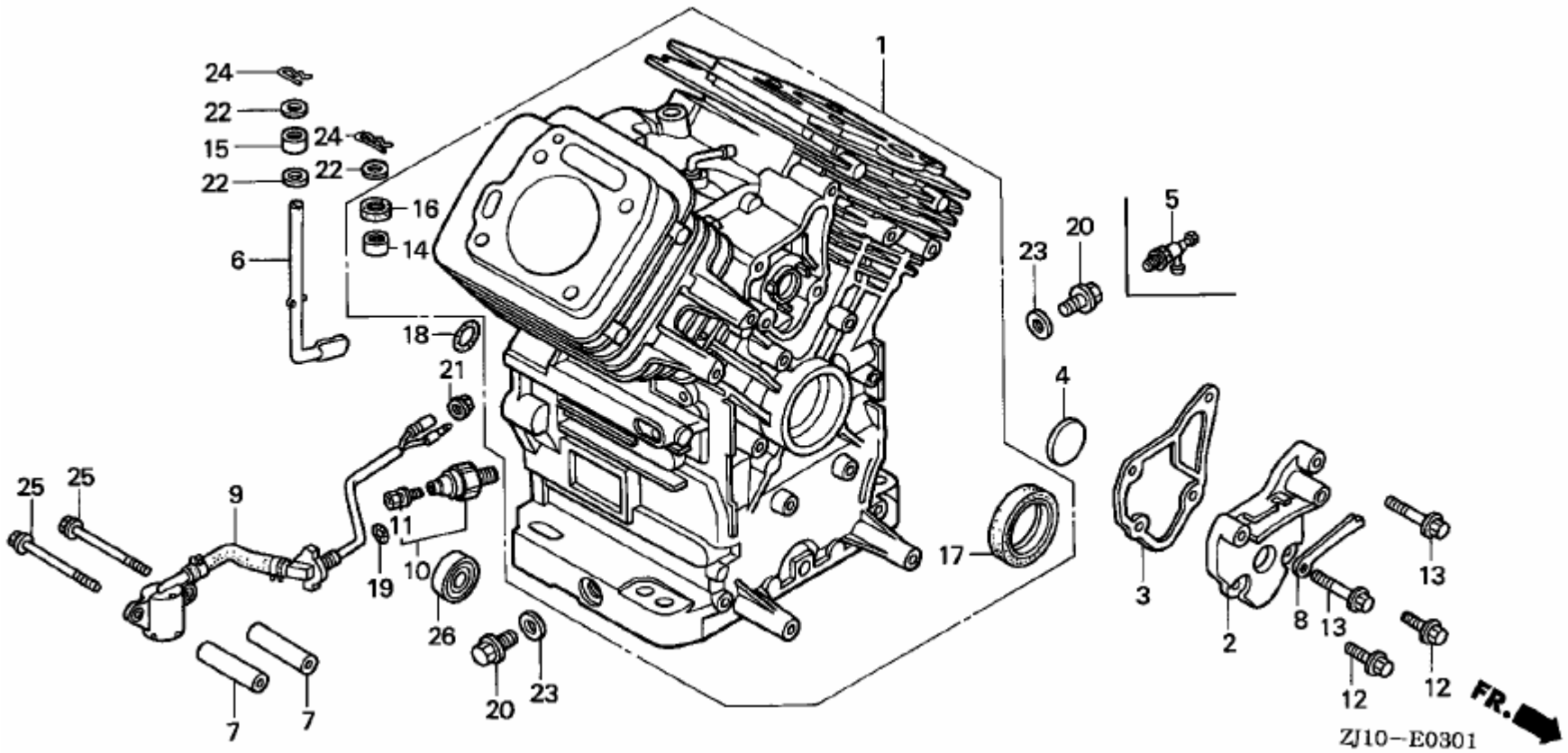

NOTE

E-3-1	CYLINDER BARREL（GX620K1）	PD60	Year / Month 2009 / 02

图号	序号	件号	名称	PART NAME	数量	规格	备注	备忘
E-3-1	1	12000JZ1840		BARREL ASSY.,CYLINDER	1			
E-3-1	2	12356ZJ1000		COVER,BREATHER	1			
E-3-1	3	12358ZJ1000		PACKING,BREATHER COVER	1			
E-3-1	4	12372ZE2300		VALVE,BERATHER	1			
E-3-1	5	15558ZJ1003		VALAVE,OIL SHUT-OFF	1			
E-3-1	6	16541ZJ1840		SHAFT,GOCERNOR ARM	1			
E-3-1	7	25523VD6010		COLLAR,FILTER SETTING	2			
E-3-1	8	31511ZJ1000		CLAMPER,CORD	1			
E-3-1	9	35480ZJ1841		SWITCH ASSY.,OIL LEVEL	1			
E-3-1	10	37240ZG3E01		SWITCH,OIL PRESSURE	1			
E-3-1	11	90002ZG5004		SCREW-WASHER,4X8	1			
E-3-1	12	90029888000		BOLT,FLANGE,6X16	2			
E-3-1	13	90031ZE1000		BOLT,FLANGE,6X32	2			
E-3-1	14	91001ZJ1841		BEARING,NEEDLE,8X12.7X11.1	1			
E-3-1	15	91002ZJ1841		BEARING,NEEDLE,8X12X10	1			
E-3-1	16	91201ZE9003		OIL SEAL,8X14X5	1			
E-3-1	17	91201ZJ1841		OIL SEAL,38X58X9	1			
E-3-1	18	91302MB6830		O-RING,13X3.0	1			
E-3-1	19	91353671004		O-RING,14MM(NOK)	1			
E-3-1	20	9280014000		BOLT,DRAIN PLUG,8MM	2			
E-3-1	21	9405010000		NUT,FLANGE,10MM	1			
E-3-1	22	9410208800		WASHER,PLAIN,8MM	3			
E-3-1	23	9410914000		WSHER,DRAIN PLUG,14MM	2			
E-3-1	24	9425108000		PINM,LOCK,8MM	2			
E-3-1	25	957010607509		BOLT,FLANGE,6X75	2			
E-3-1	26	961406003010		BEARING,RADIAL BALL,6003	1			

NOTE

E-6-1	CRANKCASE COVER (GX620K1)	PD60	Year / Month 2009 / 02	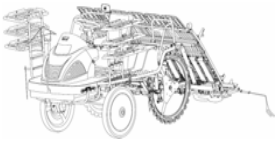

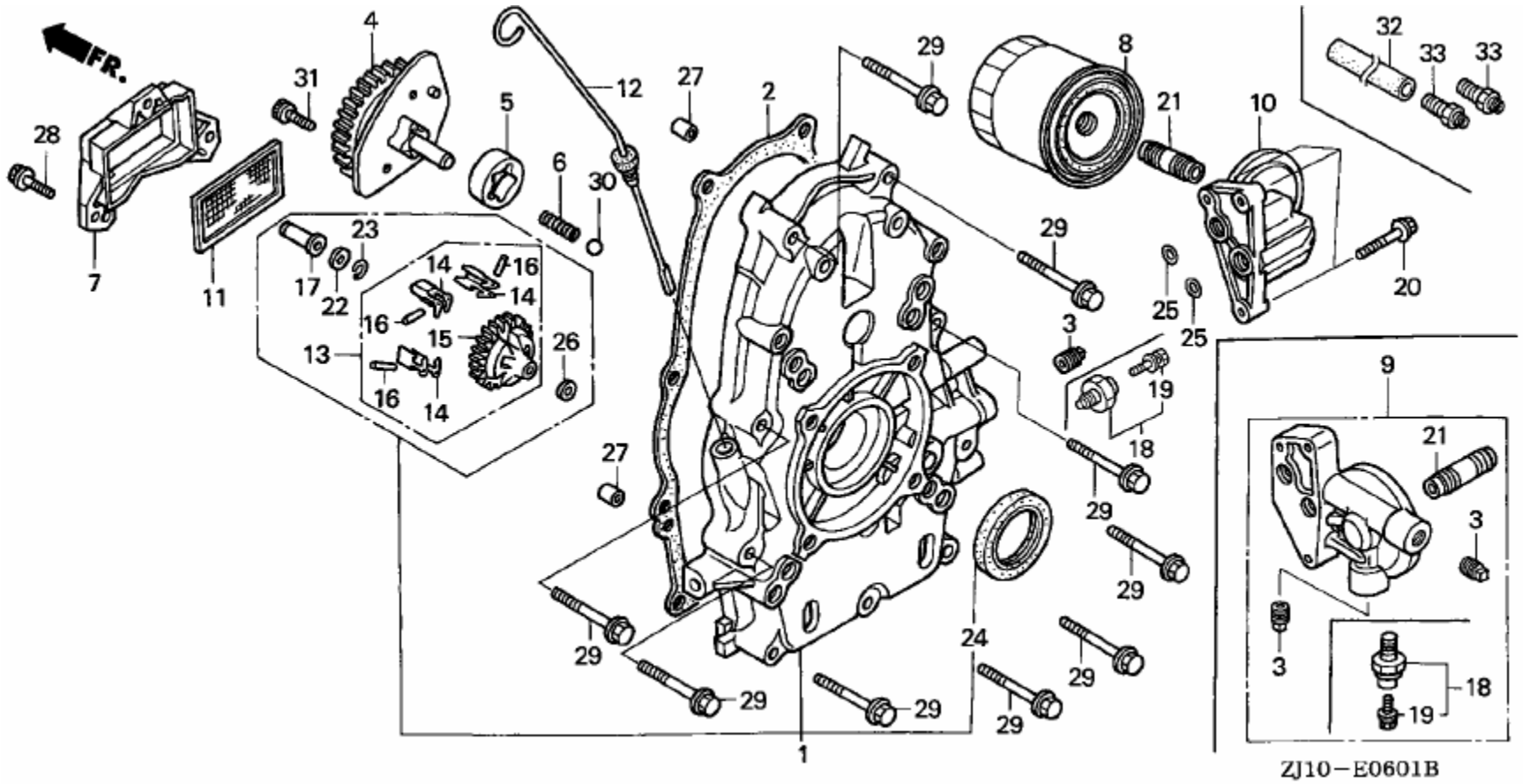

NOTE

E-6-1	CRANKCASE COVER（GX620K1）	PD60	Year / Month 2009 / 02	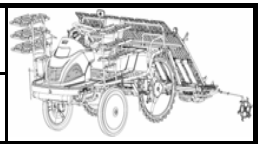

图号	序号	件号	名称	PART NAME	数量	规格	备注	备忘
E-6-1	1	1133ZJ1840		COVER ASSY.,CRANKCASE	1			
E-6-1	2	11381ZJ1850		GASKET,CASE COVER	1			
E-6-1	3	12105ZA0701		BOLT,SERLING	1			
E-6-1	4	15120ZJ1000		COVER ASSY.,OIL PUMP	1			
E-6-1	5	15124ZJ1003		ROTOR,OIL PUMP OUTER	1			
E-6-1	6	15232ZJ1000		SPPING,RELIEF VALVE	1			
E-6-1	7	15348ZJ1804		COVER,OIL FILTER	1			
E-6-1	8	15400ZJ1004		CARTRIDGE,OIL FILTER	1			
E-6-1	9	15410ZJ1800		BASE,COM FILTER(A)	1			
E-6-1	10	15411ZJ1840		BASE,OIL FILTER	1			
E-6-1	11	15427ZJ1000		SCREEN,OIL FILTER	1			
E-6-1	12	15655ZJ1861		GAUGE CONP.,OIL LEVEL	1			
E-6-1	13	16510ZJ1840		GOVERNOR ASSY.	1			
E-6-1	14	16511ZJ1840		WEIGHT,GOVERNOR	3			
E-6-1	15	16512ZJ1840		HOLDER,GOVERNOR WEIGHT	1			
E-6-1	16	16513ZE2000		PIN,GOVERNOR WEIGHT	3			
E-6-1	17	16531ZE2000		SLIDER,GOCERNOR	1			
E-6-1	18	37240ZG3E01		SWITCH,OIL PRESSURE	1			
E-6-1	19	90002ZG5004		SCREW-WASHER,4X8	1			
E-6-1	20	90015883000		BOLT,FLANGE,6X28	3			
E-6-1	21	90018PN3000		HOLDER,OIL FILTER	1			
E-6-1	22	90473147000		WASHER,6X16	1			
E-6-1	23	90602ZE1000		CLIP,GOVERNOR HOLDER	1			
E-6-1	24	91202ZJ1841		OIL SDAL,38X58X9	1			
E-6-1	25	91302ZE9003		O-RING,11.8X2.4	2			
E-6-1	26	9410106800		WASHWE,PLAIN,6MM	1			
E-6-1	27	9430108140		PIN,DOWEL,8X14	2			
E-6-1	28	957010602000		BOLT,FLANGE,6X20	3			
E-6-1	29	957010805000		BOLT,FLANGE,8X50	9			
E-6-1	30	9621112000		BALL,STDDL, 12(3/8)	1			
E-6-1	31	966000601600		BOLT,SCOKER,6X16	2			

NOTE	

E-7	CRANKSHAFT	PD60	Year / Month 2009 / 02	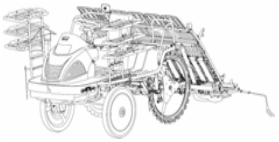

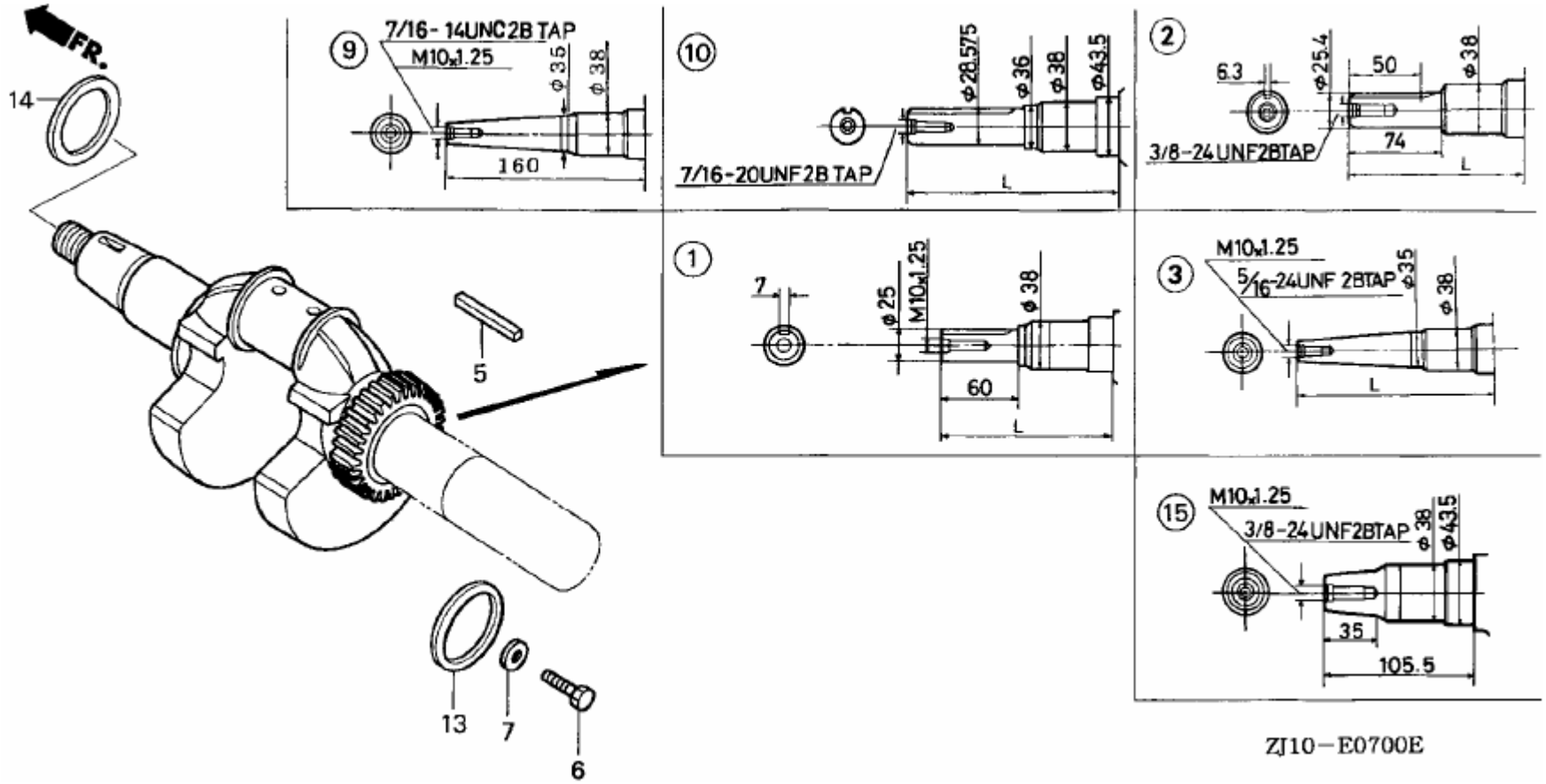

ZJ10-E0700E

NOTE	

E-7			CRANKSHAFT			PD60	Year / Month 2009 / 02	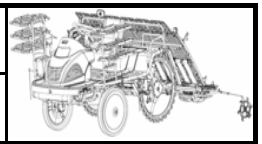
图号	序号	件号	名称	PART NAME	数量	规格	备注	备忘
E-7	2	13310ZJ1600		CRANKSHAFT COMP.	1			
E-7	5	90745ZE2600		KEY,6.3X6.3X43	1			
E-7	6	90003ZE3600		BOLT,HEX.,3/8-24UNF(25MM)	1			
E-7	7	90471ZE3000		WASHER,10.5X40X4	1			

NOTE	

E-8-1	PISTON (GX620K1)	PD60	Year / Month 2009 / 02	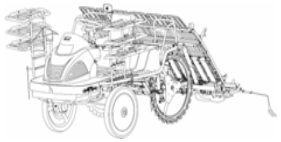

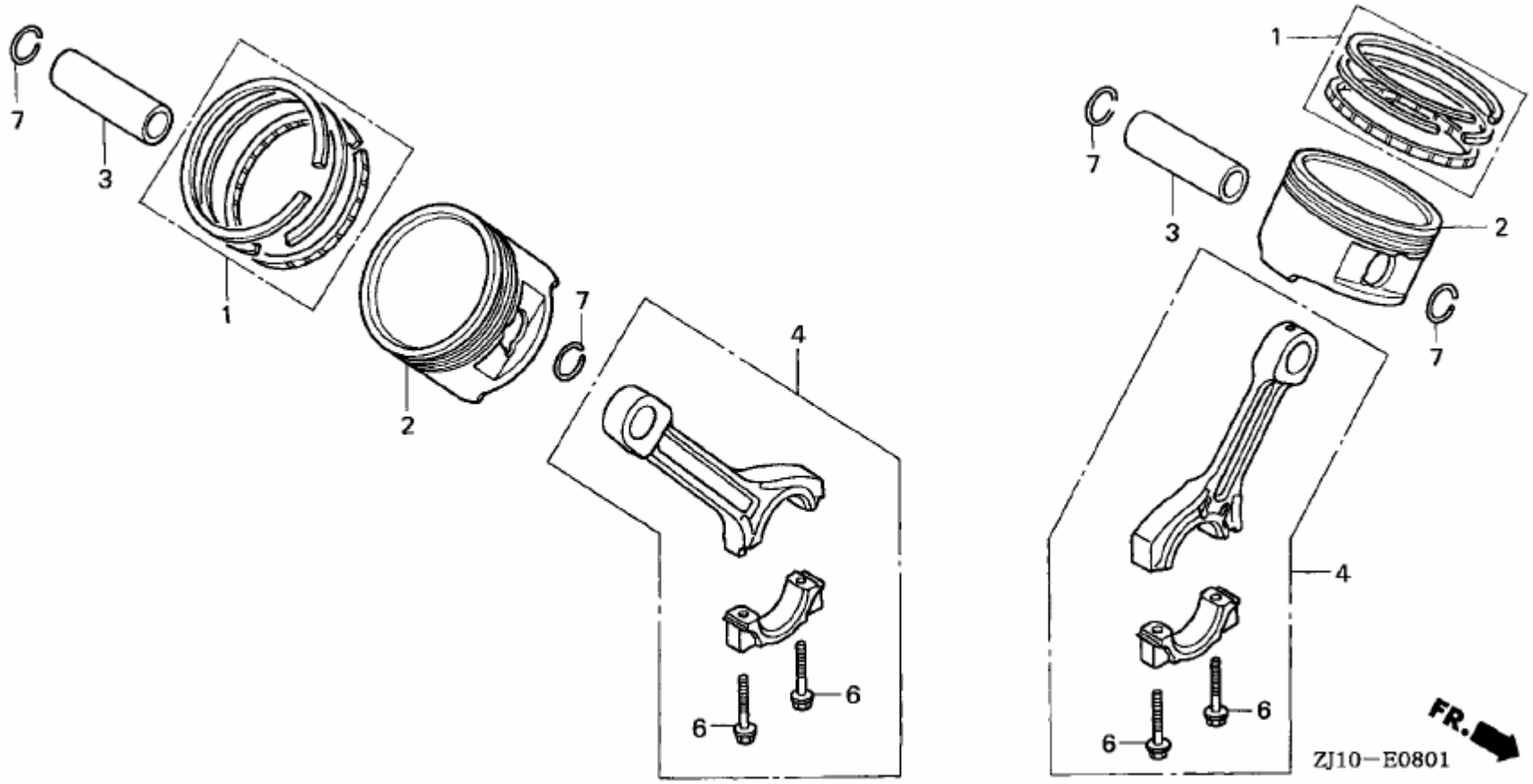

NOTE	

E-8-1	PISTON（GX620K1）	PD60	Year / Month 2009 / 02

图号	序号	件号	名称	PART NAME	数量	规格	备注	备忘
E-8-1	1	13010ZJ1841		RING SET,PISTON(STD.)(NIPPON)	2			
E-8-1	2	13101ZJ1840		PISTON(STD.)	2			
E-8-1	3	13111ZJ1840		PIN,PISTON	2			
E-8-1	4	13200ZJ1841		ROD ASSY.,CONNECTING	2			
E-8-1	6	90001ZN1000		BOLT,CONNECTING ROD,6X37	4			
E-8-1	7	9460118000		CLIP,PISTON PIN,18MM	4			

NOTE	

E-9-1	CAMSHAFT (GX620K1)	PD60	Year / Month 2009 / 02	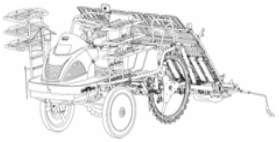

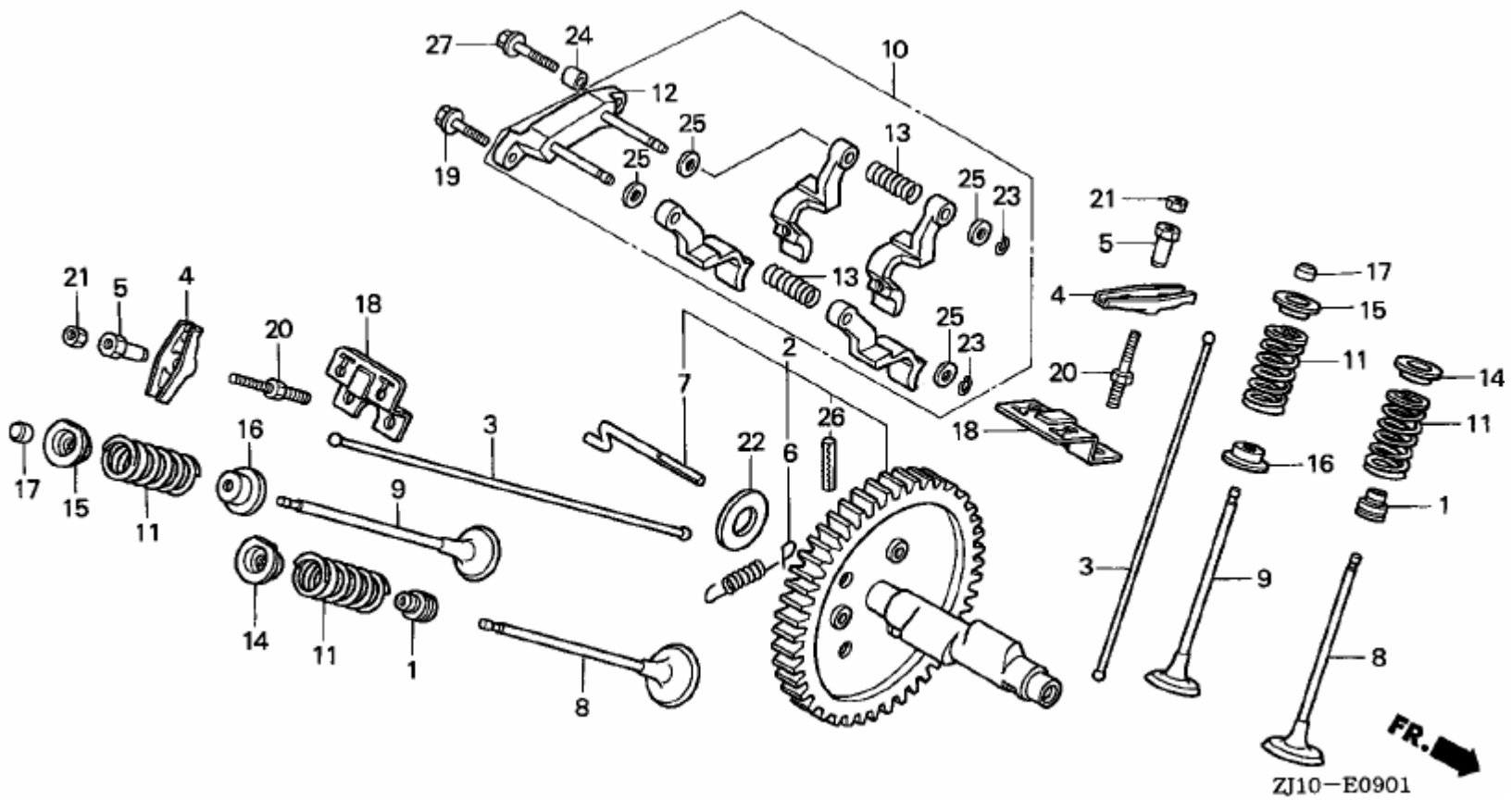

NOTE	

E-9-1	CAMSHAFT（GX620K1）	PD60	Year / Month 2009 / 02

图号	序号	件号	名称	PART NAME	数量	规格	备注	备忘
E-9-1	1	12209ZE8003		SEAL,VALVE STEM	2			
E-9-1	2	14100ZJ1842		CAMSHAFT ASSY.	1			
E-9-1	3	14410ZJ1840		ROD,PUSH	4			
E-9-1	4	14431ZE2010		ARM,VALVE ROCKER	4			
E-9-1	5	14451ZE1013		PIVOT,ROCKER ARM	4			
E-9-1	6	14568ZJ1841		SPRING,WEIGHT RETURN	1			
E-9-1	7	14576ZJ1840		PIN,DECOMPER	1			
E-9-1	8	14711ZE3000		VALVE,IN	2			
E-9-1	9	14721ZE3000		VALVE,EX	2			
E-9-1	10	14730ZJ1841		LIFTER ASSY.,VALVE	1			
E-9-1	11	14751ZE2003		SPRING,VALVE	4			
E-9-1	12	14760ZJ1840		SHAFT COMP.,VALVE LIFTER	1			
E-9-1	13	14764ZJ1840		SPRING,VALVE LIGTER	2			
E-9-1	14	14771ZE2000		RETAINER,IN.VALVE SPRING	2			
E-9-1	15	14773ZE2000		RETAINER,EX.VALVE SPRING	2			
E-9-1	16	14775ZE2010		SEAT,VALVE SPRING	2			
E-9-1	17	12781ZE2000		ROTATOR,CALVE	2			
E-9-1	18	14791ZE2010		PLATE,PUDH ROD GUIDE	2			
E-9-1	19	90005896000		BOLT,FLANGE,5X16	1			
E-9-1	20	90012ZE0010		BOLT,PIVOT,8MM	4			
E-9-1	21	90206ZE1000		NUT,PIVOT ADJUSTING	4			
E-9-1	22	90446357000		WASHWE,THRUST,17.2MM	1			
E-9-1	23	90602ZE1000		CLIP,GOVERNOR HOLDER	2			
E-9-1	24	90702GB6910		PIN,DOWEL,8X12	1			
E-9-1	25	9410106800		WASHER,PLAIN,6MM	4			
E-9-1	26	9430560282		PIN,SPRING,6X28	1			
E-9-1	27	957010602500		BOLT,FLANGE,6X25	1			

NOTE	

E-12-1	FAN COVER (GX620K1)	PD60	Year / Month 2009 / 02	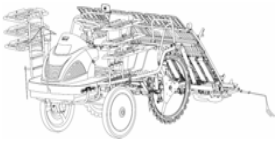

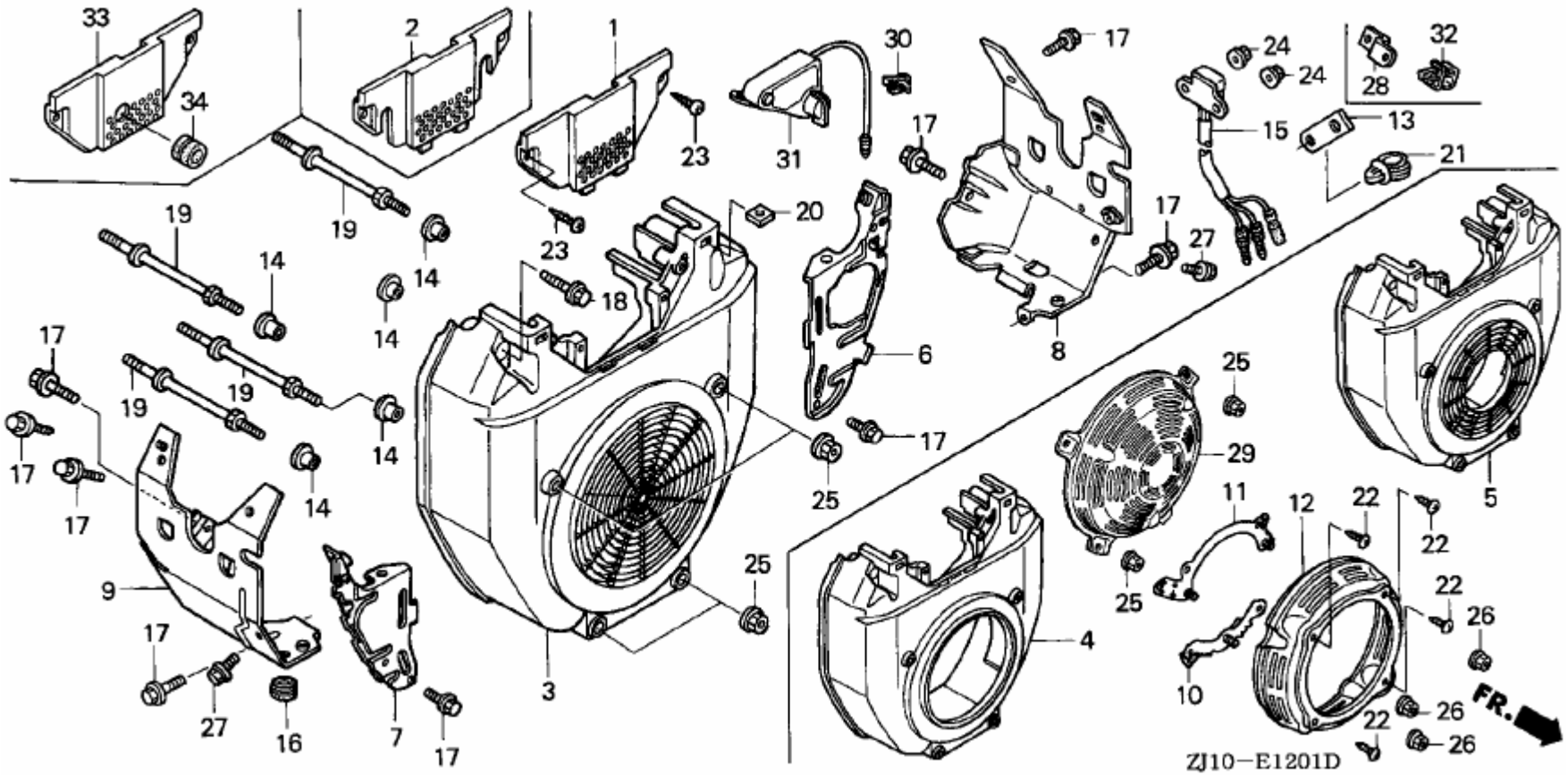

NOTE

E-12-1	CARBURETOR（GX620K1）	PD60	Year / Month 2009 / 02

图号	序号	件号	名称	PART NAME	数量	规格	备注	备忘
E-12-1	1	16715ZJ1840		COVER,FUEL PUMP	1			
E-12-1	2	16715ZJ1850		COVER,FUEL PUMP(MANUAL CONTROL)	1			
E-12-1	3	19611ZJ1860		COVER,FAN	1			
E-12-1	6	19612ZJ1840		PLATE,R.SIDE	1			
E-12-1	7	19614ZJ1840		PLATE,L.SIDE	1			
E-12-1	8	19631ZJ1840		SHROUD,R.	1			
E-12-1	9	19632ZJ1840		SHROUD,L.	1			
E-12-1	13	32103ZG8000		BRACKET,WIRE HARNESS CLIP	1			
E-12-1	14	33713GC2000		COLLAR B,TAILLIGHT	6			
E-12-1	15	34150ZJ1841		ALERT UNIT,OIL	1			
E-12-1	16	80101310000		RUBBER,RR.FENDER CUSHION	1			
E-12-1	17	90013883000		BOLT,FLANGE,6X12(CT200)	10			
E-12-1	18	90018ZE1000		BOLT,FLANGE,6X23(CT200)	2			
E-12-1	19	90042ZJ1840		BOLT,STUD,6X71	4			
E-12-1	20	90313ZJ1840		NUT,S UARE,5MM	2			
E-12-1	21	91558SD5003		CLIP,WIRE HARNESS(BLACK)	1			
E-12-1	23	9391325580		SCREW,TAPPING,5X20	2			
E-12-1	24	9405005000		NUT,FLANGE,5MM	2			
E-12-1	25	9405006000		NUT,FLANGE,6MM	4			
E-12-1	27	957010600800		BOLT,FLANGE,6X8	2			

NOTE	

E-14-2	CARBURETOR (GX620K1)	PD60	Year / Month 2009 / 02	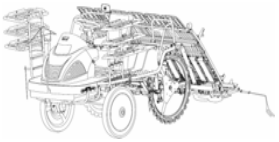

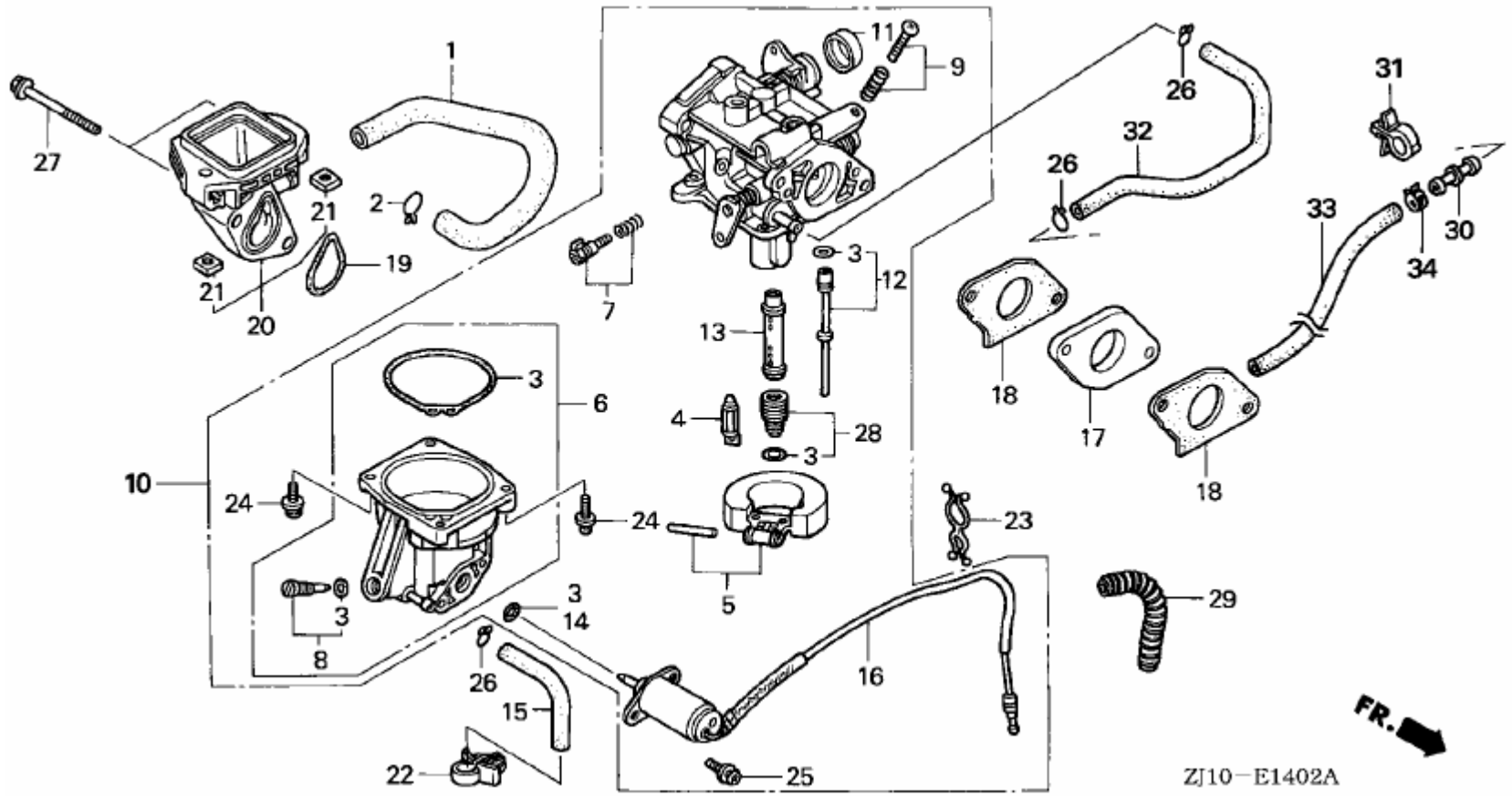

NOTE

E-14-2	FAN COVER（GX620K1）	PD60	Year / Month 2009 / 02

图号	序号	件号	名称	PART NAME	数量	规格	备注	备忘
E-14-2	1	12357ZJ1840		TUBE,BREATHER	1			
E-14-2	2	15772551000		CLIP,BREATHER TUBE	1			
E-14-2	3	16010ZG8000		GASKET SET	1			
E-14-2	4	16011KCK910		VALVE SET,FLOAT	1			
E-14-2	5	16013ZV4005		FLOAT SET	1			
E-14-2	6	16015ZJ1841		CHAMBER SET,FLOAT	1			
E-14-2	7	16016ZJ1010		SCREW SET	1			
E-14-2	8	16024124760		SCREW SET,DRAIN	1			
E-14-2	9	16028ZG8000		SCREW SET	1			
E-14-2	10	16100ZJ1841		CARBURETOR ASSY,(BG22G A)	1			
E-14-2	11	16148141881		CAP,CHOKE DUST	1			
E-14-2	12	16150ZJ1841		JET SET 52	1			
E-14-2	13	16166ZJ0000		NOZZLE,MAIN	1			
E-14-2	14	16178548004		O-RING,5.8X1.9	1			
E-14-2	15	16198ZJ1840		TUBE,DRAIN	1			
E-14-2	16	16200ZJ1841		VALVE ASSY.,SOLENOID	1			
E-14-2	17	16211ZJ0830		INSULATOR,CARBURETOR	1			
E-14-2	18	16221ZJ1840		PACKING,CARBURETOR	2			
E-14-2	19	17228ZG8003		PACKING,AIR CLEANER	1			
E-14-2	20	17410ZJ1840		ELBOW COMP.,AIR CLEANER	1			
E-14-2	21	90314ZJ1840		NUT,INSERT,6MM	2			
E-14-2	22	90682959661		CLIP B,CABLE	1			
E-14-2	23	91402ZJ1841		CLIP,PURSE LOCK	1			
E-14-2	24	938920401418		SCREW-WASHER,4X14	4			
E-14-2	25	938920501218		SCREW-WASHER,45X12	2			
E-14-2	26	9500202080		CLIP,TUBE(B8)	1			
E-14-2	27	958010612000		BOLT,FLANGE,6X120	2			
E-14-2	28	99201ZG81000		JET SET,MAIN, 100	1			
E-14-2	29	30519ZJ1840		TUBE,CORRUGATE	1			

NOTE

E-15-4	AIR CLEANER (5)	PD60	Year / Month 2009 / 02	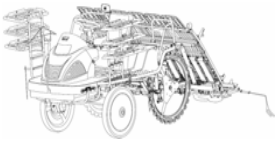

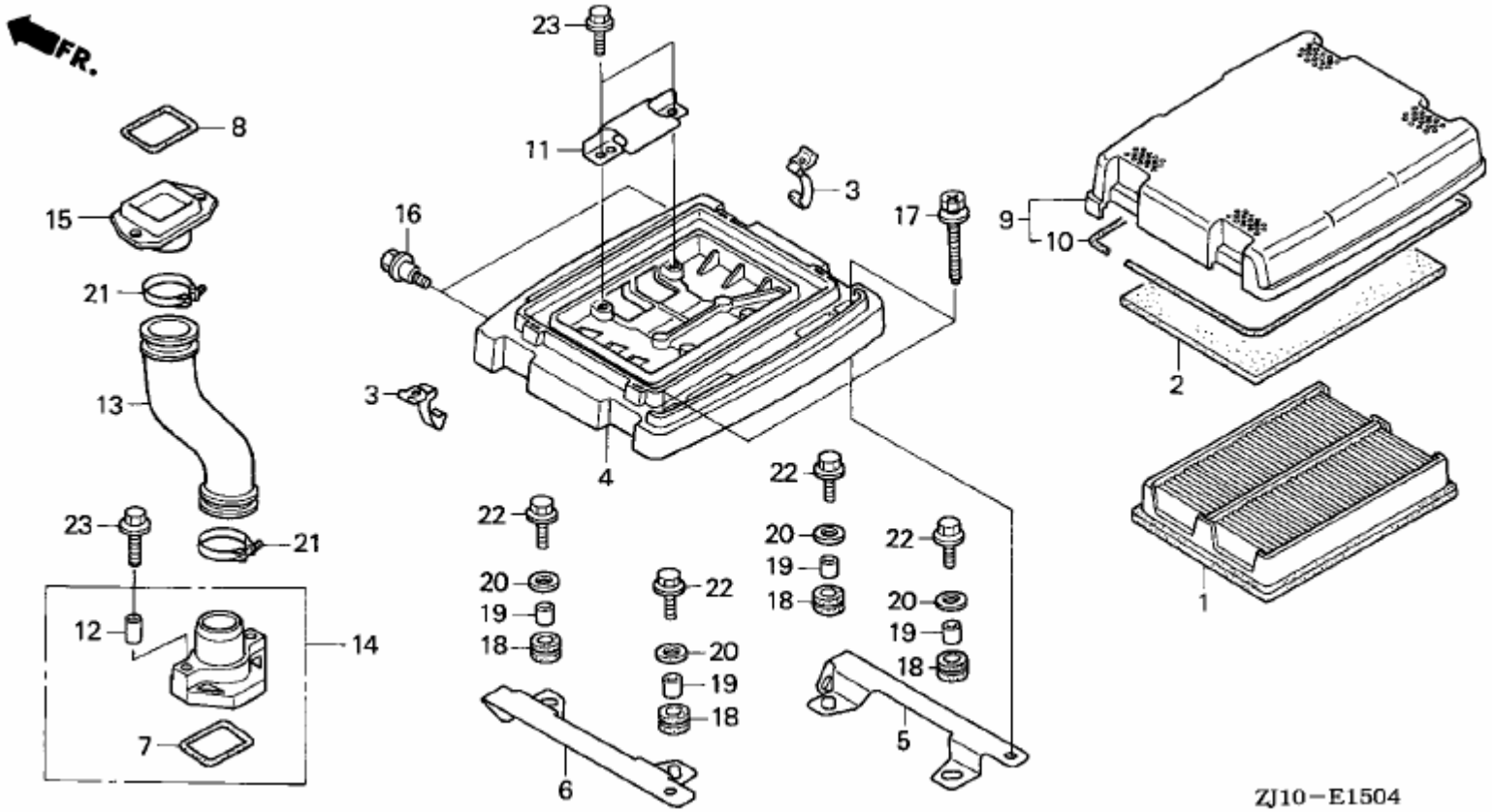

NOTE

E-15-4	AIR CLEANER (5)	PD60	Year / Month 2009 / 02

图号	序号	件号	名称	PART NAME	数量	规格	备注	备忘
E-15-4	1	17210ZJ1841		ELEMENT COMP.,AIR CLEANER	1			
E-15-4	2	17218ZJ1840		FILTER,OUTER	1			
E-15-4	3	17219ZJ1840		CLIP,AIR CLEANER	4			
E-15-4	4	17220ZN1800		CASE COMP.,AIR CLEANER	1			
E-15-4	5	17222ZJ1840		STAY,R.AIR CALEANER CASE	1			
E-15-4	6	17224ZJ1840		STAY,L.AIR CALEANER CASE	1			
E-15-4	7	17229ZJ1840		SEAL,AIR CALEANER CASE	1			
E-15-4	8	17229ZN1000		SEAL,AIR CALEANER CASE	1			
E-15-4	9	17230ZJ1840		COVER ASSY,MAIR CLEANER	1			
E-15-4	10	17233ZJ1840		SEAL,AIR CALEANER COVER	1			
E-15-4	11	17234ZJ1840		PLATE,AIR CLEANER SETTING	1			
E-15-4	12	17238ZJ4830		COLLAR A,AIR CLEANER	2			
E-15-4	13	17251ZJ1840		TUBE,AIR CLEANER CINNECTING	1			
E-15-4	14	17415ZJ1840		JOINT ASSY.,CONNECTING TUBE(B)	1			
E-15-4	15	17416ZN1000		JOINT A,CONNECTING TUBE	1			
E-15-4	16	90002ZJ1840		BOLT,FLANGE,6MM	2			
E-15-4	17	90133SG0003		BOLT-WASHER,5X30	2			
E-15-4	18	90852898000		RUBBER,CONTROL BOX	4			
E-15-4	19	91552898000		COLLAR,CONTROL BOX	4			
E-15-4	20	9410308900		WASHER,PLAIN,6MM	4			
E-15-4	21	9501858250		BAND,AIR CLEANER CONNECTING TUBE(58)	2			
E-15-4	22	957010602000		BOLT,FLANGE,6X20	4			
E-15-4	23	957010602800		BOLT,FLANGE,6X28	4			

NOTE

E-18-1	FUEL PUMP (GX620K1)	PD60	Year / Month 2009 / 02	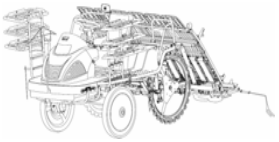

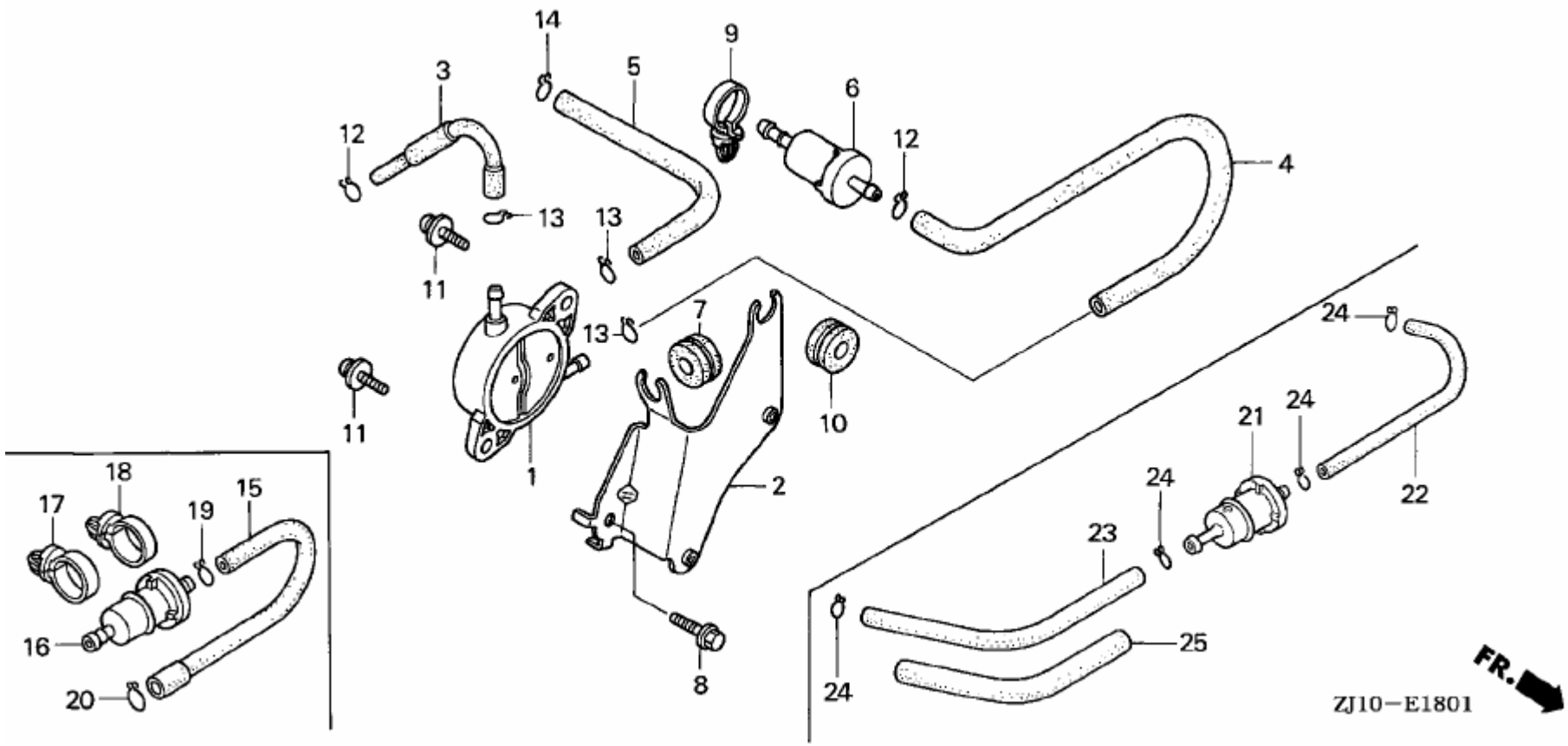

NOTE

E-18-1	FUEL PUMP（GX620K1）	PD60	Year / Month 2009 / 02

图号	序号	件号	名称	PART NAME	数量	规格	备注	备忘
E-18-1	1	16700ZL8003		PUMP ASSY.,FUEL	1			
E-18-1	2	16711ZJ1840		STAU,FUEL PUMP	1			
E-18-1	3	16850ZJ1840		TUBE COMP.,FUEL(A)	1			
E-18-1	4	16852ZJ1840		TUBE B,FUEL	1			
E-18-1	5	16882ZJ1840		TUBE,DIAPHRAGM	1			
E-18-1	6	16910ZE8015		STRAINER COMP.,FUEL	1			
E-18-1	7	19111MF5000		GROMMET,RESERVE TANK	1			
E-18-1	8	90014952000		BOLT,FLANGE,6X14(CT200)	1			
E-18-1	9	90617SA0003		CLIP,WIRE HARNESS	1			
E-18-1	10	91601ZJ1840		GROMMET,PUMP STAY	1			
E-18-1	11	938940601600		SCREW-WASHER,6X16	2			
E-18-1	12	9500202080		CLIP,TUBE(B8)	2			
E-18-1	13	9500202100		CLIP,TUBE(B10)	3			
E-18-1	14	9500250000		CLIP,TUBE(C9)	1			
E-18-1	15	16852ZJ1850		TUBE B,FUEL	1			
E-18-1	16	16910ZE8015		STRAINER COMP.,FUEL	1			
E-18-1	17	90617SA0003		CLIP,WIER HARNESS	1			
E-18-1	18	90617SA0003		CLIP,WIER HARNESS	1			
E-18-1	19	9500202080		CLIP,TUBE(B8)	1			
E-18-1	20	9500202100		CLIP,TUBE(B10)	1			
E-18-1	21	16910ZE8015		STRAINER COMP.,FUEL	1			
E-18-1	22	950014505540		TUBE,FUEL,4.5X55	1			
E-18-1	23	950015503040		TUBE,FUEL,5.3X30	1			
E-18-1	24	9500202080		CLIP,TUBE(B8)	4			
E-18-1	25	95003250032C		TUBE,VINYL,9X11X30	1			

NOTE	

E-20	IGNITION COIL	PD60	Year / Month 2009 / 02	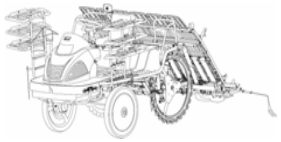

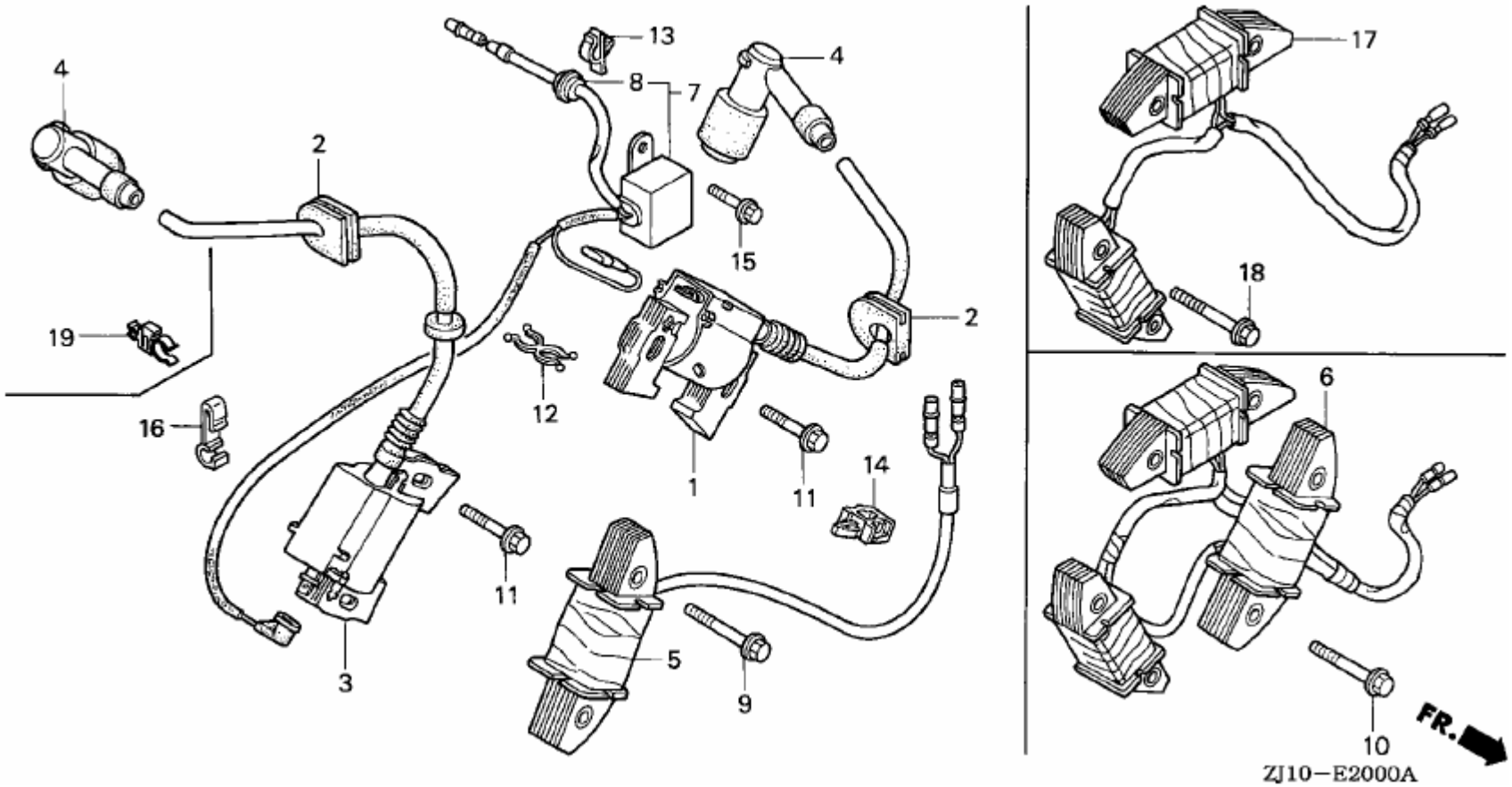

NOTE	

E-20	IGNITION COIL	PD60	Year / Month 2009 / 02	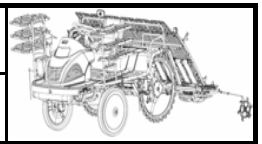

图号	序号	件号	名称	PART NAME	数量	规格	备注	备忘
E-20	1	30500ZJ1013		COIL ASSY.,R.IGNITION	1			
E-20	2	30518ZJ1841		GROMMET,HIGH TENSION	2			
E-20	3	30550ZJ1000		COIL ASSY.,R.IGNITION	1			
E-20	4	30700ZJ1003		CAP ASSY.,NOISE SUPPRESSOR	2			
E-20	5	31630ZJ1003		COIL ASSY.,CHARGE(12V/3A)	1			
E-20	6	31630ZJ1801		COIL ASSY.,CHARGE(12V/20A)	1			
E-20	7	31740ZJ1003		DIODE ASSY.,DNGINE STOP	1			
E-20	8	63312ZA7000		GROMMET,TOOL	1			
E-20	9	90014ZE6000		BOLT,FLANGE,6X35	1			
E-20	10	90031ZE1000		BOLT,FLANGE,6X32	6			
E-20	11	90121952000		BOLT,FLANGE,6X25	2			
E-20	12	90031ZE1000		BOLT,FLANGE,6X32	1			
E-20	13	90673GJ5003		CLIP,CORD	1			
E-20	14	91504750003		CLIP,WIRE HARNESS	1			
E-20	15	957010600800		BOLT,FLANGE,6X8	1			
E-20	16	32763PA0000		CLAMPER,CORD	1			

NOTE	

E-21-1	STARTER MOTOR (GX620K1)	PD60	Year / Month 2009 / 02	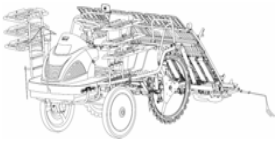

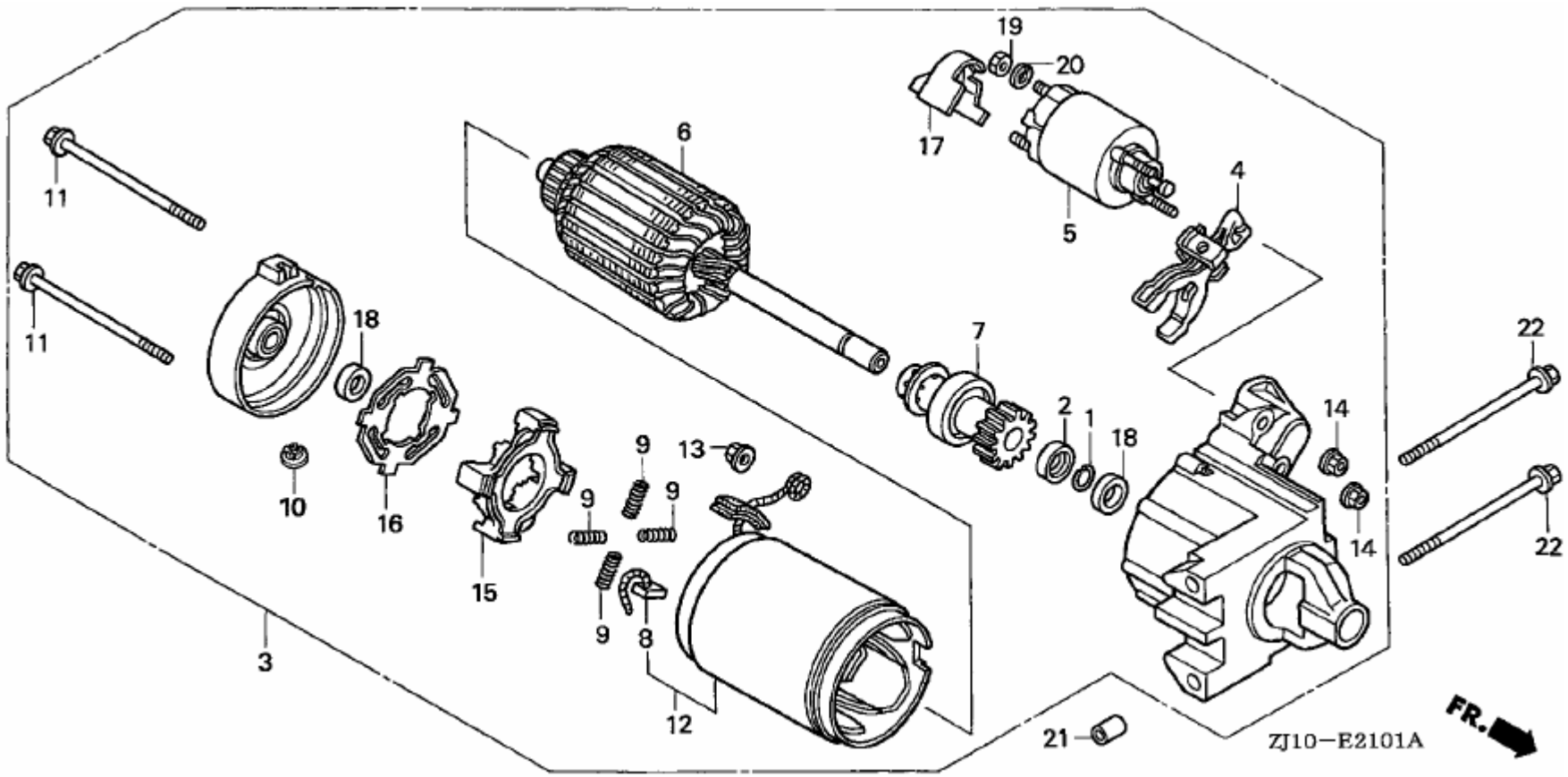

NOTE

E-21-1	STARTER MOTOR（GX620K1）	PD60	Year / Month 2009 / 02

图号	序号	件号	名称	PART NAME	数量	规格	备注	备忘
E-21-1	1	30201PH9004		RING,SNAP(DENSO)	1			
E-21-1	2	30202PZ1003		COLLAR SET,CLUTCH STOP	1			
E-21-1	3	31200ZJ1841		MOTOR ASSY.,STARTER	1			
E-21-1	4	31203PH9004		LEVER,PINION DRIVE	1			
E-21-1	5	31204ZJ1H01		SWITCH ASSY.,MAGNET	1			
E-21-1	6	31206ZG4801		ARMATUER COMP.	1			
E-21-1	7	31207ZJ1H01		CLUTCH COMP.,CVERRUNNING	1			
E-21-1	8	31211PH9004		BRUSH	4			
E-21-1	9	31212PH9004		SPRING,BRUSH	4			
E-21-1	10	31213P64N01		COVER	1			
E-21-1	11	31214PH9004		COLT,THROUGH	2			
E-21-1	12	31216ZJ1H01		YOKE COMP	1			
E-21-1	13	31220PH9004		NUT,HEX.,8MM	1			
E-21-1	14	31223PA0006		NUT,FLANGE,5MM	2			
E-21-1	15	31231PH9004		HOLDER,BRUSH	1			
E-21-1	16	31233PH9004		INSULATOR,BRUSH HOLDER	1			
E-21-1	17	31234ZJ1H01		COVER,TERMINAL	1			
E-21-1	18	91002ZG4801		VEARING A	2			
E-21-1	19	94001082000S		NUT,HEX.,8MM	1			
E-21-1	20	9411108000		WASHER,SPERING,8MM	1			
E-21-1	21	9430110120		PIN,DOWEL,10X12	2			
E-21-1	22	957010811000		BOLT,FLANGE,8X110	2			

NOTE	

E-22-4	CONTROL (5)	PD60	Year / Month 2009 / 02	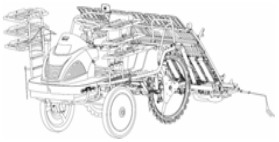

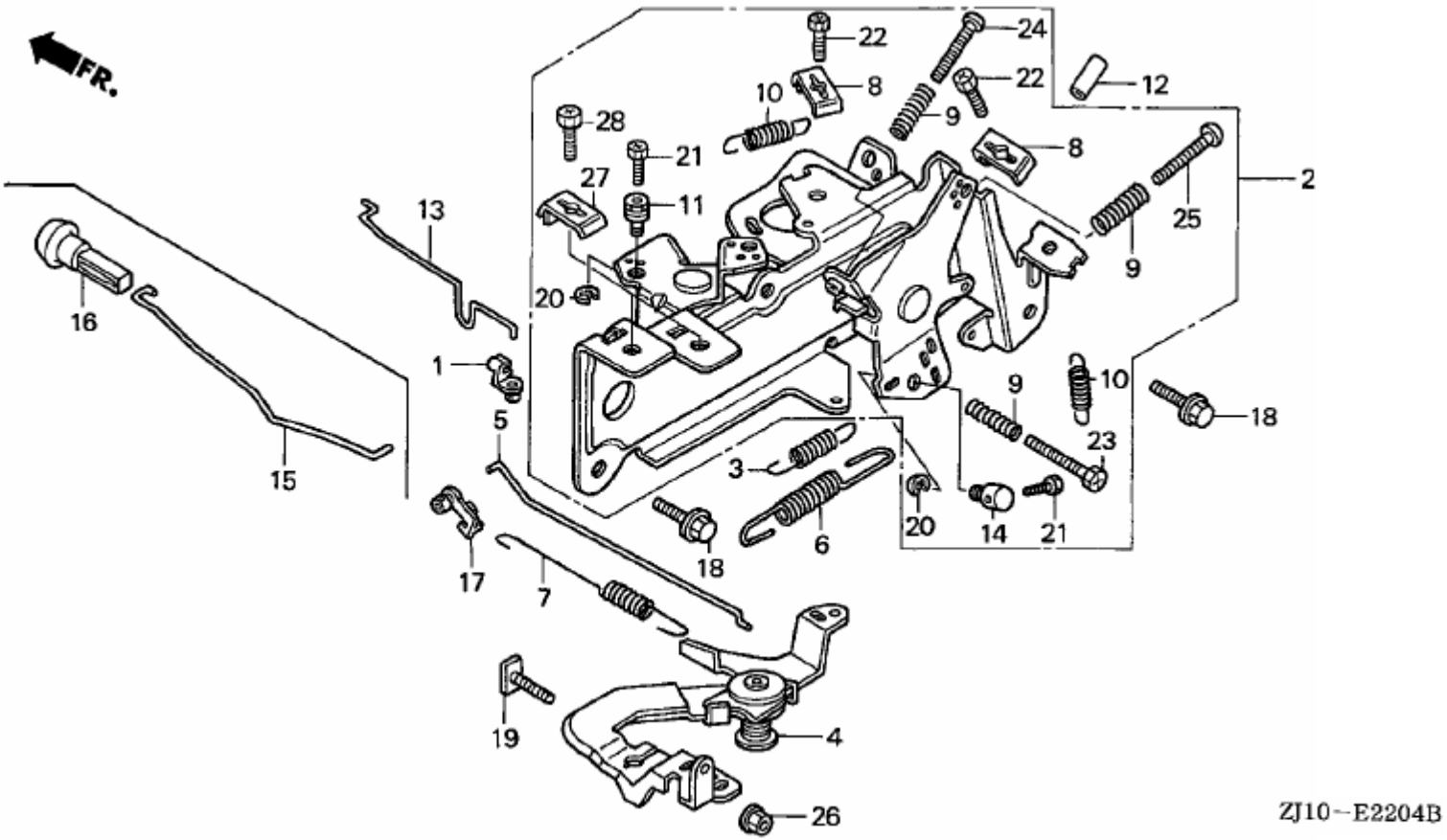

NOTE

E-22-4	CONTROL（5）	PD60	Year / Month 2009 / 02

图号	序号	件号	名称	PART NAME	数量	规格	备注	备忘
E-22-4	1	16263883W10		JOINT,ROD	1			
E-22-4	2	16500ZJ1890		CONTROL ASSY,(AUTO THROTTLE)	1			
E-22-4	3	16534ZJ1840		SPRING,SRARTER	1			
E-22-4	4	16550ZJ1840		ARM COMP.,GOVERNOR	1			
E-22-4	5	16555ZJ1840		ROD,GOVERNOR	1			
E-22-4	6	16561ZJ1860		SPRING,GOVERNOR(MANUAL)	1			
E-22-4	7	16562ZJ1840		SPRING,THROTTLE RETURN	1			
E-22-4	8	16576891000		HOLDER,CABLE	2			
E-22-4	9	16584883300		SPRING,CONTROL ADJUSTING	2			
E-22-4	10	16592ZJ1000		SPRING,CABLE RETURN	2			
E-22-4	11	16594883010		HOLDER,WIRE	1			
E-22-4	12	16599ZG1M10		COLLAR,STOPPER	1			
E-22-4	13	16611ZJ1840		ROD,CHOKE CONTROL	1			
E-22-4	14	16617ZJ1840		HOLDER,CABLE	1			
E-22-4	17	17957ZV4000		BUSH,LINKAGE	1			
E-22-4	18	90014952000		BOLT,FLANGE,6X14(CT200)	2			
E-22-4	19	90015ZE3790		BOLT,GOVERNOR ARM	1			
E-22-4	20	90605230000		CIRCLIP,5MM	2			
E-22-4	21	92301040060H		BOLT,RECESSED,4X6	2			
E-22-4	22	92301050160A		BOLT,RECESSED,5X16	2			
E-22-4	23	92301050250A		BOLT,RECESSED,5X25	1			
E-22-4	24	93500050250A		SCREW,PAN,5X25	1			
E-22-4	25	93500050350A		SCREW,PAN,5X35	1			
E-22-4	26	9405006000		NUT,FLANGE,6MM	1			

NOTE	

E-23	CONTROL BOX	PD60	Year / Month 2009 / 02	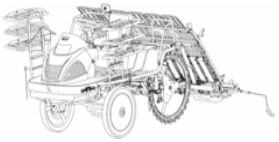

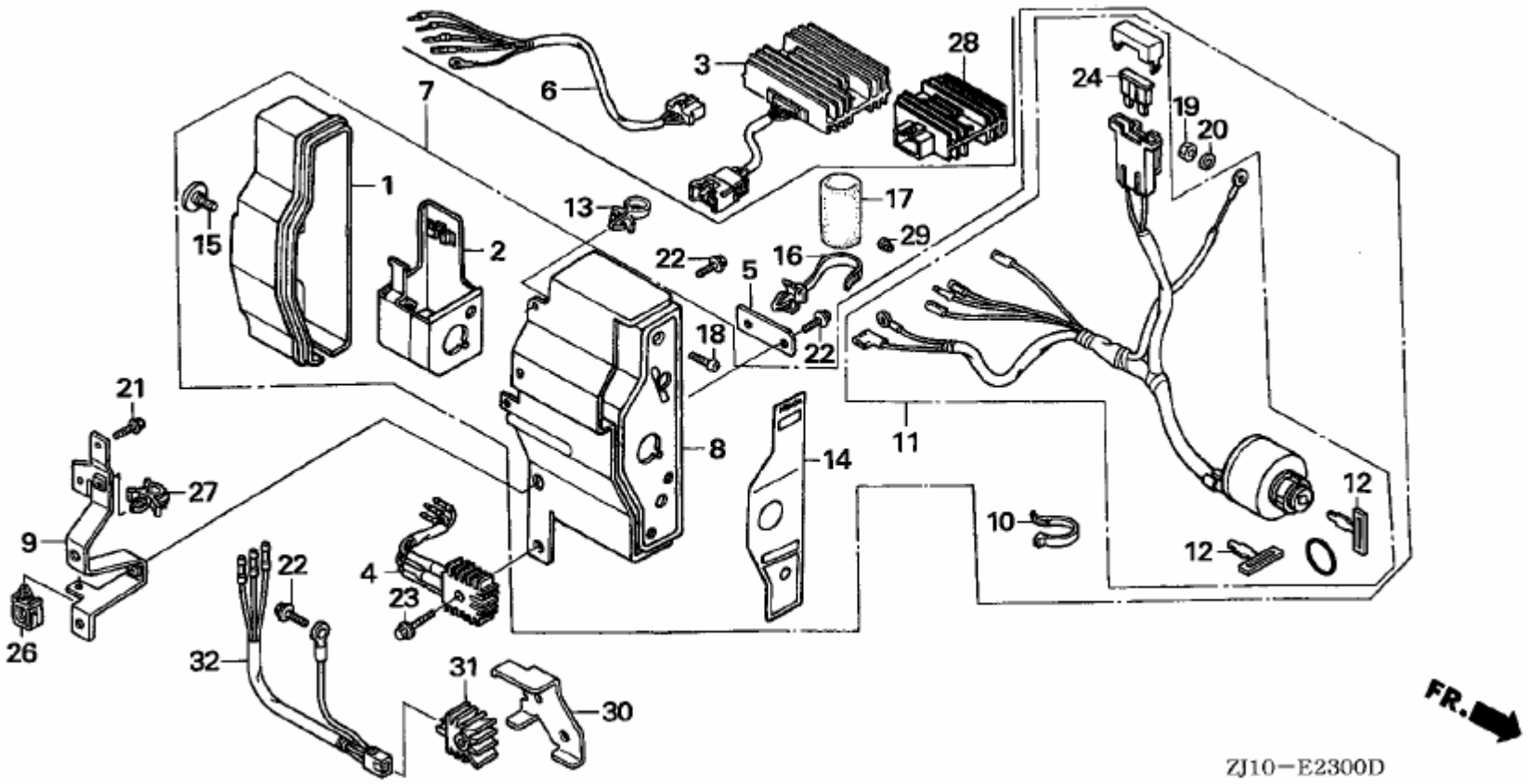

NOTE

E-23			CONTROL BOX			PD60	Year / Month 2009 / 02	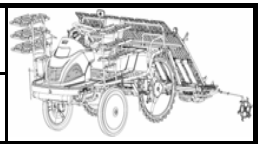
图号	序号	件号	名称	PART NAME	数量	规格	备注	备忘
E-23	3	31620ZG5003		RECTIFIER ASSY.,REGULATOR(20A)	1			
E-23	6	32105ZJ1800		HARNESS ASSY.,SUB WIRE	1			

NOTE	

E-28-1	LABEL (GX620K1)	PD60	Year / Month 2009 / 02	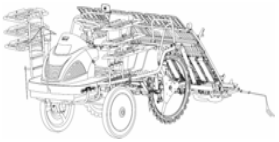

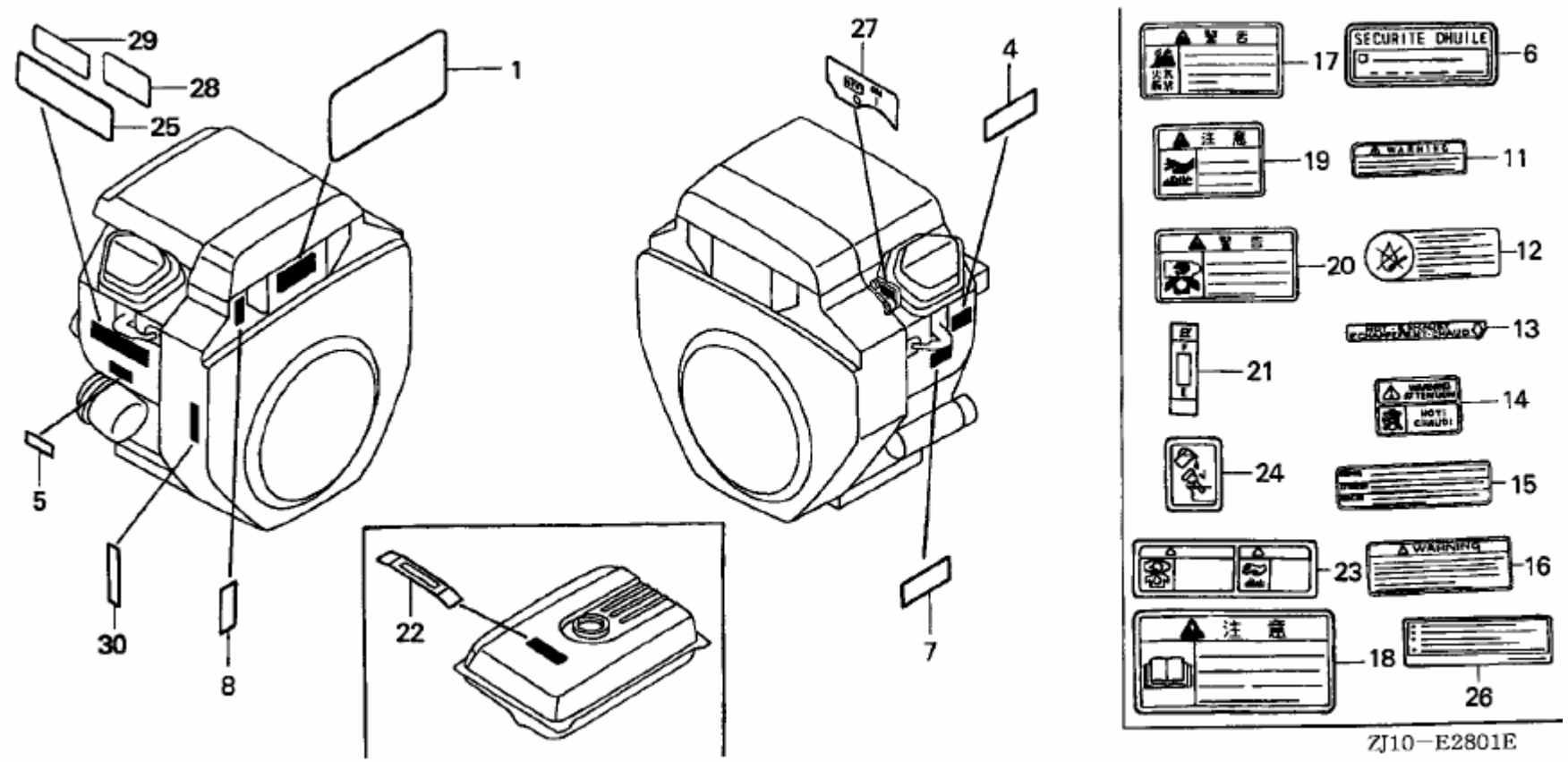

NOTE	

E-28-1	LABEL（GX620K1）	PD60	Year / Month 2009 / 02

图号	序号	件号	名称	PART NAME	数量	规格	备注	备忘
E-28-1	1	87101ZJ1840		EMBLEM	1			
E-28-1	4	87152ZJ1000		LABEL,SPECIFICATION(GX620)	1			
E-28-1	5	87516YE9660		MARK,OPERATOR CAUTION	1			
E-28-1	6	87530ZL8820		MARK,OIL ALERT (F)	1			
E-28-1	7	87532ZH8810		MARK,OIL ALERT(EXTERNAL)	1			
E-28-1	8	87532ZJ1840		MARK,THROTTLE INDICATION	1			
E-28-1	11	87522883660		MARK,CAUTION(ENGLISH/FRENCH/SPANISH)	1			
E-28-1	12	87168ZC3630		LABEL,RAIN WARNING(ENGLISH)	1			
E-28-1	13	87539ZC6650		MARK,EX.CAUTION	1			
E-28-1	14	87539ZC6650		MARK,EX.WARNING(WNGLISH/FRENCH)	1			
E-28-1	15	87561880600		MARK,CAUTION(ENGLISH/FRENCH/SPANISH)	1			
E-28-1	16	87563ZB4630		LABEL,CONNECT WARNING(ENGLISH)	1			
E-28-1	17	87106737J00		MARK,FUEL WARNING	1			
E-28-1	18	87150ZH8000		MARK,CAUTION(JAPANESE)	1			
E-28-1	19	87539737J00		MARK,HEAT CAUTION	1			
E-28-1	20	87561733J00		MARK,EX.GAS WARNING	1			
E-28-1	21	87565ZA7000		MARK,FUEL WARNING	1			
E-28-1	22	87565ZB4A00		PLATE,FUEL INDICATION	1			
E-28-1	23	87526ZH8000		MARK B,COMBINATION	1			
E-28-1	24	87594ZB4620		MARK,OIL CAUTION	1			
E-28-1	25	87135ZE2000		LABEL(E-SPEC)	1			

NOTE	

E-29	TOOL	PD60	Year / Month 2009 / 02	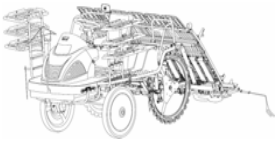

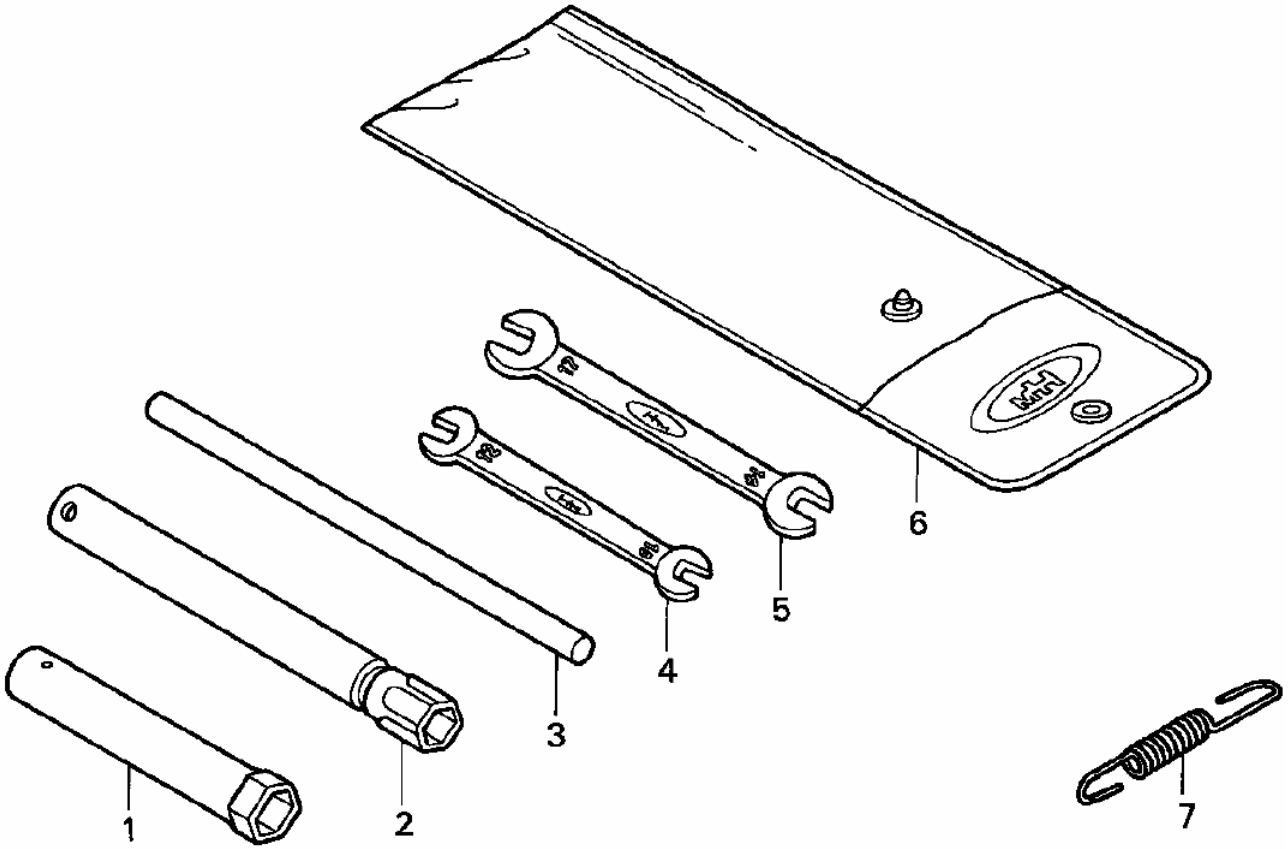

NOTE	

E-29			TOOL			PD60	Year / Month 2009 / 02	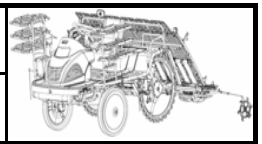
图号	序号	件号	名称	PART NAME	数量	规格	备注	备忘
E-29	1	89216ZB4000		WRENCH,PLUG	1			
E-29	2	89218ZE1000		WERNCH COMP.,SPARK PLUG	1			
E-29	3	89219805000		HANDLE,BOX WRENCH	1			
E-29	4	9900110120		SPANNER,10X12	1			
E-29	5	9900114170		SPANNER,14X17	1			
E-29	6	9900802300		BAG,TOOL,230MM	1			
E-29	7	16561ZJ1850		SPRING,GOVERNOR(MANUAL)	1			

NOTE	

본 기

Body

101	엔진프레임	PD60	Year / Month 2009 / 02	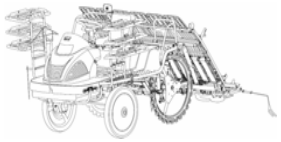

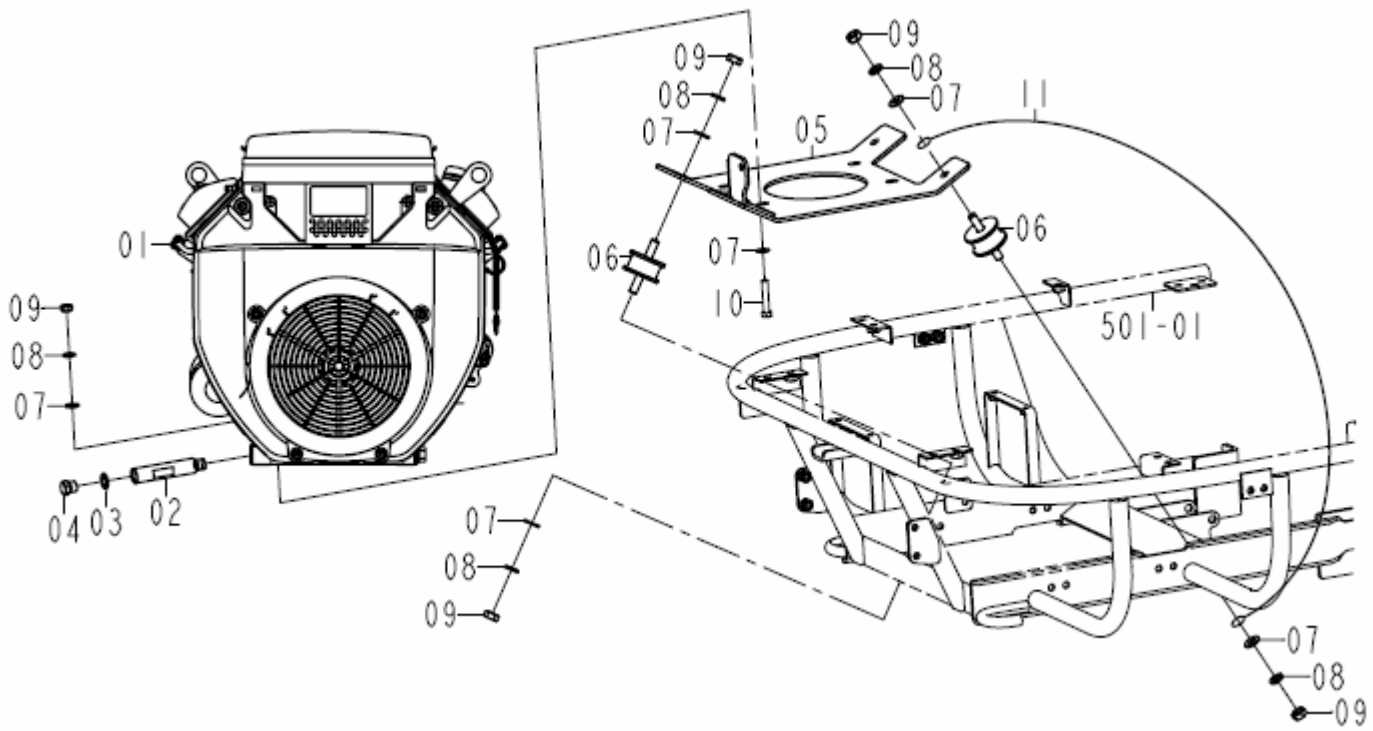

NOTE	

PDF Complete
Your complimentary use period has ended. Thank you for using PDF Complete.
Click Here to upgrade to Unlimited Pages and Expanded Features

101	엔진프레임	PD60	Year / Month 2009 / 02

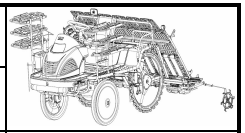

FIG.	NO.	부품번호	품명	PART NAME	수량	규격	비고	메모
101	01	20081013100	엔진 ASSY , 혼다/612(S-TYPE)	ENGINE ASSY , HONDA/612(S-TYPE)	1			
101	02	20081010022	퇴유파이프	PIPE , DRAIN	1			
101	03	94109140000	와셔, 드레인 플러그(14mm)	WASHER, DRAIN PLUG , 14mm	1			
101	04	92800140000	퇴유플러그	BOLT, DRAIN PLUG , 14mm	1			
101	05	20081012200C	엔진베이스 COMP	BASE COMP , ENGINE	1			
101	06	20081020010	쿠션 고무 (M10. 5/28)	RUBBER , CUSHION/M10.5X28	4			
101	07	V4111000100	평와셔	WASHER , PLAIN	16	M10		
101	08	V4011600100	스프링와셔	WASHER , SPRING	12	M10		
101	09	V3042600100	소형육각너트보통2종	NUT , HEX/2	12	M10		
101	10	V2013610045	소형육각볼트(보통)	BOLT , HEX	4	M10x45		
101	11	20085320040A	코드(접지/엔진)	CORD , EARTH/ENG	1			

NOTE	

105	풀리&휀	PD60	Year / Month 2009 / 02	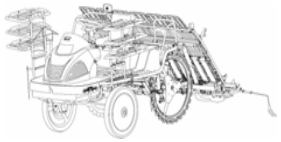

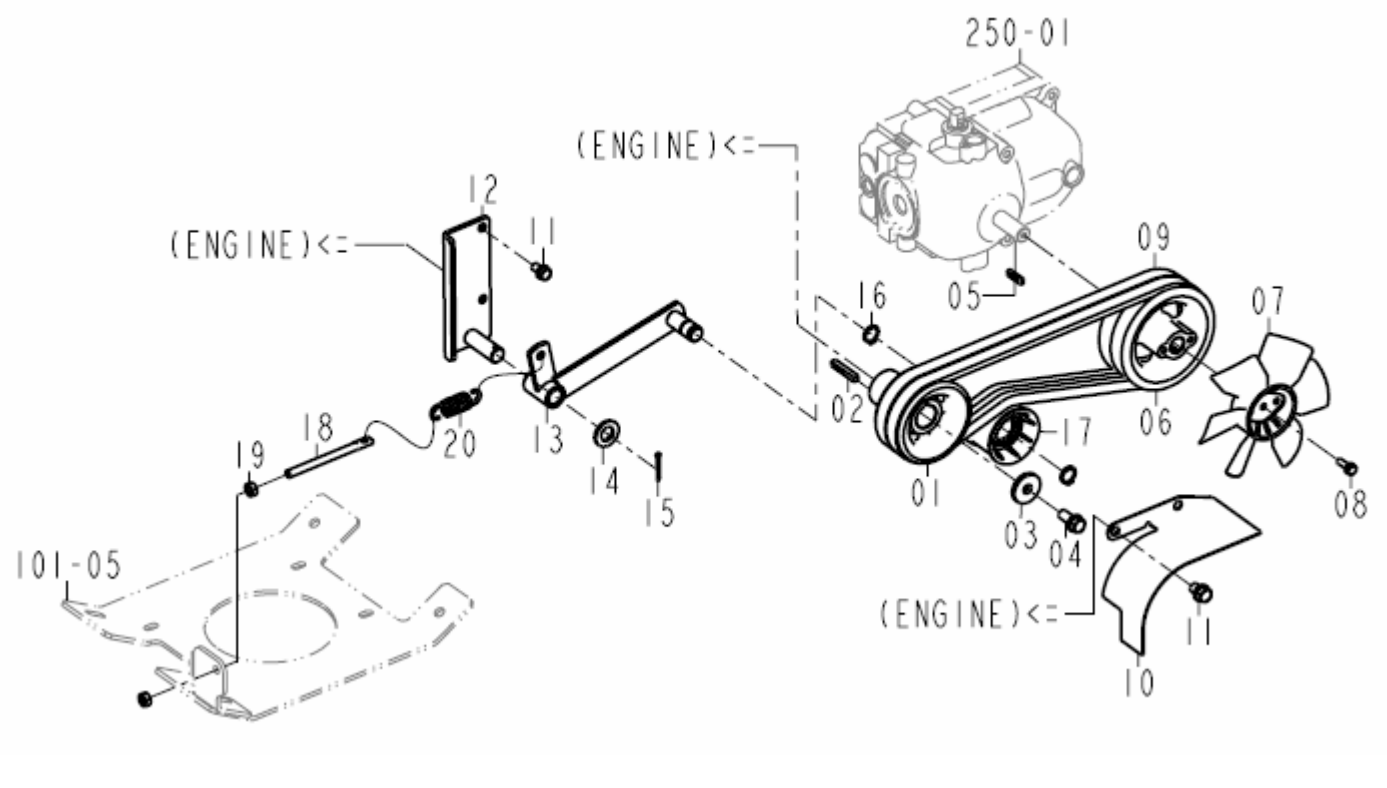

NOTE	

PDF Complete
Your complimentary use period has ended. Thank you for using PDF Complete.
Click Here to upgrade to Unlimited Pages and Expanded Features

105	풀리&휀	PD60	Year / Month 2009 / 02

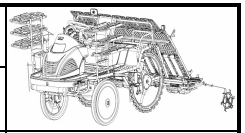

FIG.	NO.	부품번호	품명	PART NAME	수량	규격	비고	메모
105	01	20081050011	구동풀리(V2B)	PULLEY , DRIVING/V2B	1			
105	02	20081050040	키(06X06X40)	KEY , 6X6X40	1			
105	03	37613420080	협액대 잠김 와셔	WASHER , HOLDER	1			
105	04	20081013180	육각볼트(3/8-24UNFX30)	BOLT , HEX	1	3/8-24UNFX30		
105	05	20081050080	키(05X05X25)	KEY , 05X05X25	1			
105	06	20081050030B	종동풀리(V2B)	PULLEY , DRIVEN/V2B	1			
105	07	20081050090	휀(HST)	FAN , HST	1			
105	08	V2113606020	육각볼트(S)	BOLT , HEX /S	3	M6x20(S)		
105	09	36757200021	V벨트(LB37)	BELT , LB37	2			
105	10	20081050110A	풀리커버	Cover,Pulley	1			
105	11	20081013160	볼트(5/16-UNF X 16)	BOLT, 5/16 UNF X 16	4			
105	12	20081052301	텐션베이스 COMP	BASE COMP , TENSION	1			
105	13	20081052101A	텐션암 COMP	ARM COMP , TENSION	1			
105	14	V4111600160	평와셔	WASHER , PLAIN	1	M16		
105	15	V5001930025	분할핀	PIN , SPLIT	1	3.0X25		
105	16	V7041400170	C형멈춤링(축용)	C-RING , SHAFT	2	17		
105	17	20081050060	텐션풀리	PULLEY , TENSION	1			
105	18	36542330060	체인 텐션 로드(102)	ROD , CHAIN(TENSION)(102)	1			
105	19	V3042600080	소형육각너트보통2종	NUT , HEX/2	2	M8		
105	20	13524040040	스프링	SPRING	1			

NOTE	

111	연료탱크	PD60	Year / Month 2009 / 02	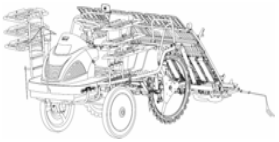

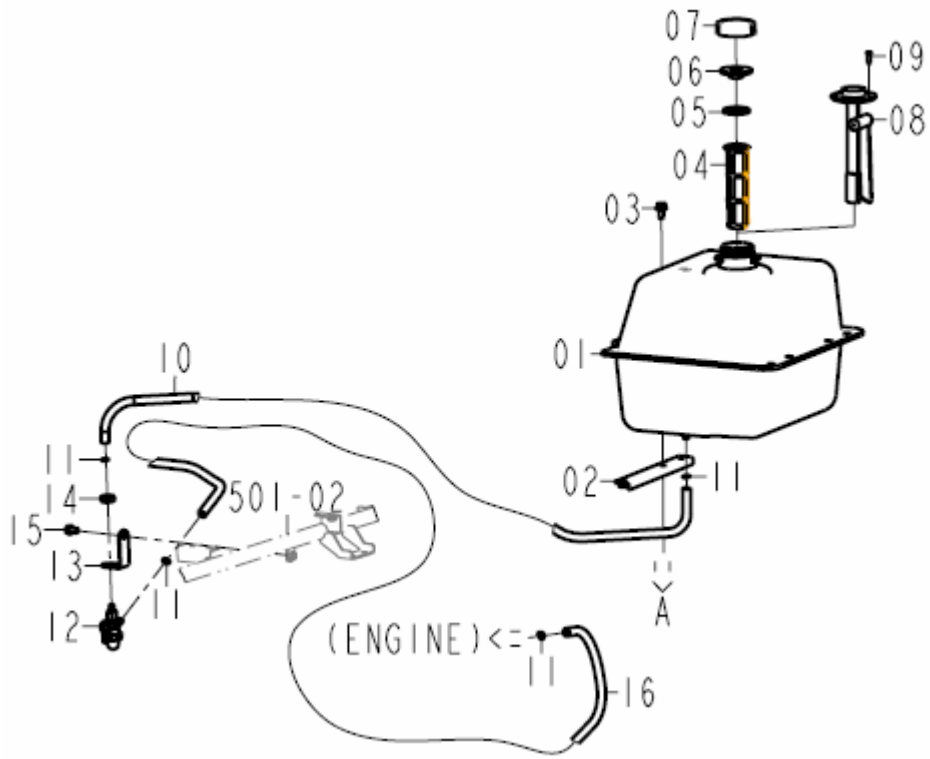

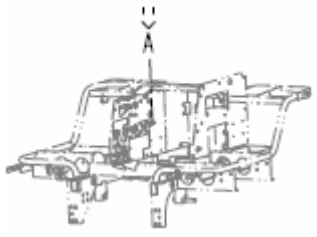

NOTE	

PDF Complete
Your complimentary use period has ended. Thank you for using PDF Complete.
Click Here to upgrade to Unlimited Pages and Expanded Features

111	연료탱크	PD60	Year / Month 2009 / 02

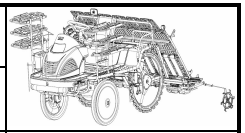

FIG.	NO.	부품번호	품명	PART NAME	수량	규격	비고	메모
111	01	20081110011	연료탱크	TANK , FUEL	1			
111	02	20081112200B	연료탱크 플레이트 COMP	PLATE COMP,SUPPORT/TANK	1			
111	03	V2183608020	소형육각볼트보통(SP)	BOLT , HEX/SP	5	M8x20(SP)		
111	04	20081110070	스트레이너	STRAINER	1			
111	05	20081110080	고무	CLIP	1			
111	06	27065010041	개스킷(탱크캡)	GASKET , CAP	1			
111	07	21005020063	연료탱크캡	CAP , FUEL TANK	1			
111	08	34523102202	연료게이지 ASSY	GAUGE ASSY , FUEL	1			
111	09	V2402605016	플랜지붙이육각볼트	BOLT , HEX FLANGE	5	M5x16(S)		
111	10	20081110020	연료호스(탱크-세조기)	HOSE , FUEL/TANK-STRAINER	1			
111	11	14501410050	클램프(워엄,14.5)	CLAMP , WORM 14.5	4			
111	12	20081110070	스트레이너	STRAINER	1			
111	13	20081110040C	필터브라킷	BRACKET , FILTER	1			
111	14	V3042600080	소형육각너트보통2종	NUT , HEX/2	1	M8		
111	15	V2173608020	소형육각볼트보통(S)	BOLT , HEX/S	1	M8x20(S)		
111	16	20081110030D	연료호스(세조기-엔진)	HOSE , FUEL/STRAINER-ENGINE	1			

NOTE	

112	소음기	PD60	Year / Month 2009 / 02	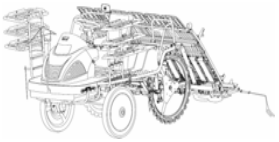

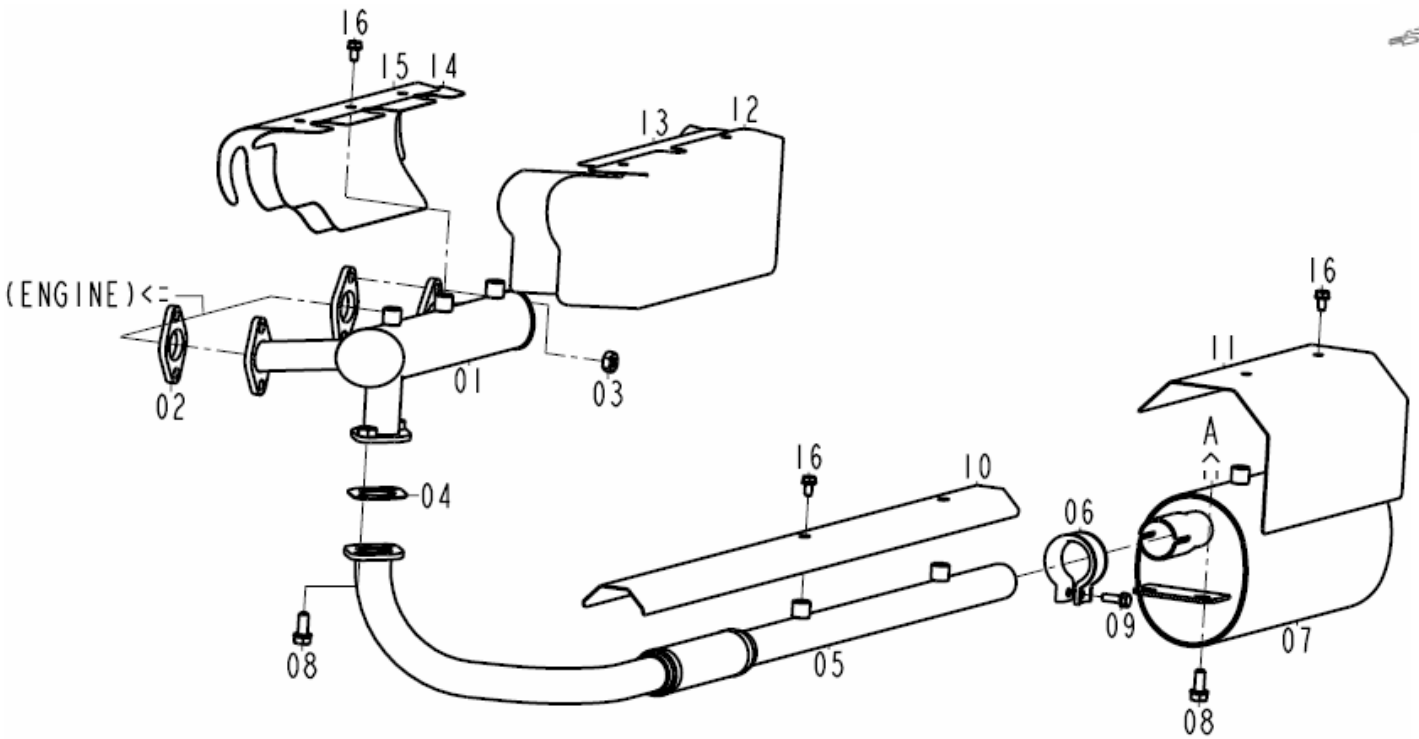

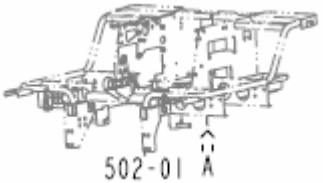

NOTE	

PDF Complete
Your complimentary use period has ended. Thank you for using PDF Complete.
Click Here to upgrade to Unlimited Pages and Expanded Features

112	소음기	PD60	Year / Month 2009 / 02

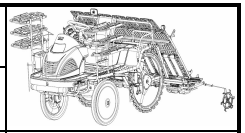

FIG.	NO.	부품번호	품명	PART NAME	수량	규격	비고	메모
112	01	20081122801	배기관 COMP	PIPE COMP	1			
112	02	18333ZB7800	협액대 잠김 와셔	WASHER , HOLDER	2			
112	03	V3042600080	소형육각너트보통2종	NUT , HEX/2	4	M8		
112	04	20081120050	소음기가스킷(하)	SILENCER CUSHION	1			
112	05	20081122402B	배기다기관 COMP	PIPE COMP, EXHAUST	1			
112	06	20081122900	클램프 COMP	BAR CLASP	1			
112	07	20081122201B	소음기 COMP	MUFFLER COMP	1			
112	08	V2173608020	소형육각볼트보통(S)	BOLT , HEX/S	6	M8x20(S)		
112	09	V2113606020	소형육각볼트보통(S)	BOLT , HEX/S	1	M6x20(S)		
112	10	20081120030A	커버(파이프)	COVER FR/MUFFLER MAIN	1			
112	11	20081120040	커버(소음기)	COVER, MUFFLER	1			
112	12	20081120021	소음기 커버(배기다기관)	COVER, UPR/OUT/EXHAUST	1			
112	13	20081120070	소엄기커버(외)팩킹	SHEATHING PAPER,UPR/OUT/EXHAUST	1			
112	14	20081120080	소엄기커버(내)팩킹	SHEATHING PAPER,UPR/IN/EXHAUST	1			
112	15	20081120060	소엄기커버(내)	COVER,UPR/IN/EXHAUST	1			
112	16	V2402606012	플랜지붙이육각볼트	BOLT , HEX FLANGE	7	M6x12		

NOTE	

117	전조등스테이	PD60	Year / Month 2009 / 02	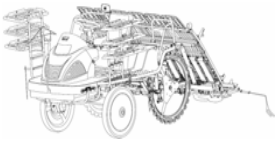

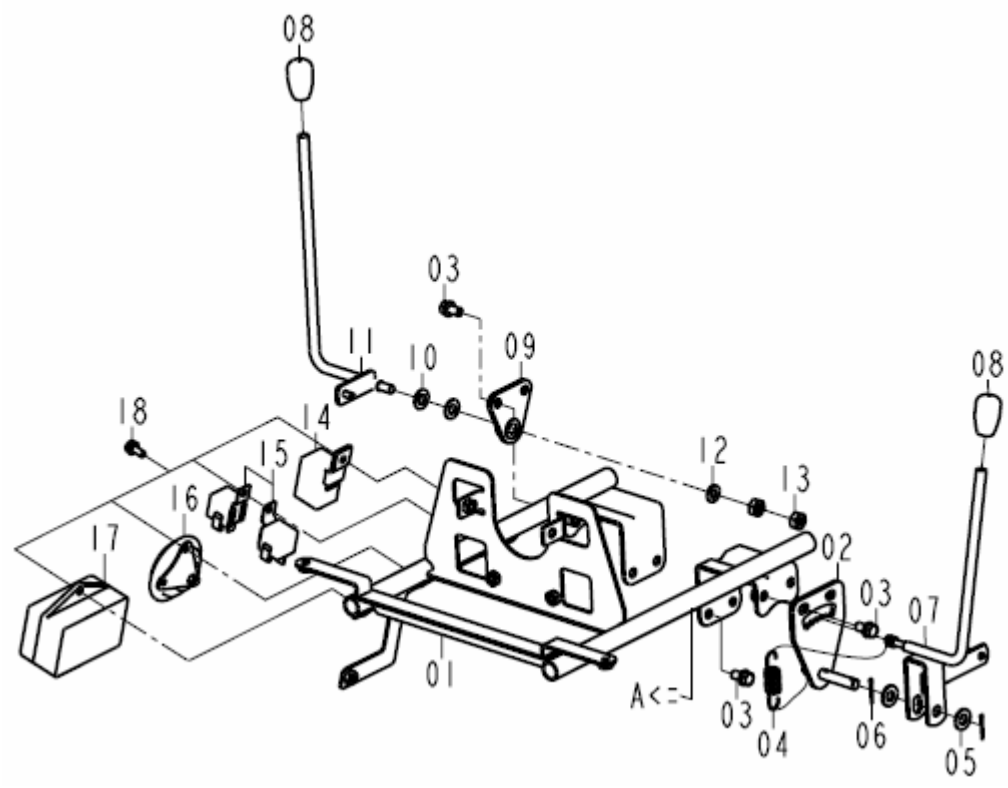

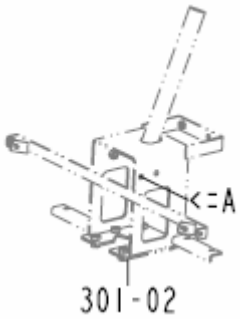

NOTE	

PDF Complete
Your complimentary use period has ended. Thank you for using PDF Complete.
Click Here to upgrade to Unlimited Pages and Expanded Features

117	전조등스테이	PD60	Year / Month 2009 / 02

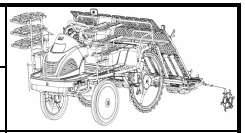

FIG.	NO.	부품번호	품명	PART NAME	수량	규격	비고	메모
117	01	20085012401B	전조등스테이 COMP	STAY COMP , LAMP	1			
117	02	20084222700G	감도베이스 COMP	BASE COMP , SENSITIVITY	1			
117	03	V2173608020	소형육각볼트보통(S)	BOLT , HEX/S	8	M8x20(S)		
117	04	20084220033	스프링(HE060)	SPRING , HE060	1			
117	05	V4111600100	평와셔	WASHER , PLAIN	2	M10		
117	06	V5001925020	분할핀	PIN , SPLIT	2	2.5X20		
117	07	20084222600F	감도레버 COMP	LEVER COMP , SENSITIVITY	1			
117	08	20081172402	스로틀레버 COMP	LEVER COMP , THROTTLE	1			
117	09	20081172300D	스로틀레버베이스	BASE , LEVER/THROTTLE	1			
117	10	21307130030A	접시스프링	SPRING , CONE	2			
117	11	20081172402	스로틀레버 COMP	LEVER COMP , THROTTLE	1			
117	12	V4111600080	평와셔	WASHER , PLAIN	1	M8		
117	13	V3042600080	소형육각너트보통2종	NUT , HEX/2	2	M8		
117	14	15606642401	플레셔 SET	FLASHER SET	1			
117	15	34521014000	점화릴레이	RELAY , IGNITION	2			
117	16	13606212000	경음기	BUZZER	1			
117	17	20085342300	퓨즈박스 ASSY	BOX , FUSE	1			
117	18	V2123606016	육각볼트(SP)	BOLT , HEX/SP	6	M6x16(SP)		

NOTE	

201	앞 차축	PD60	Year / Month 2009 / 02	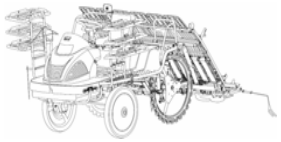

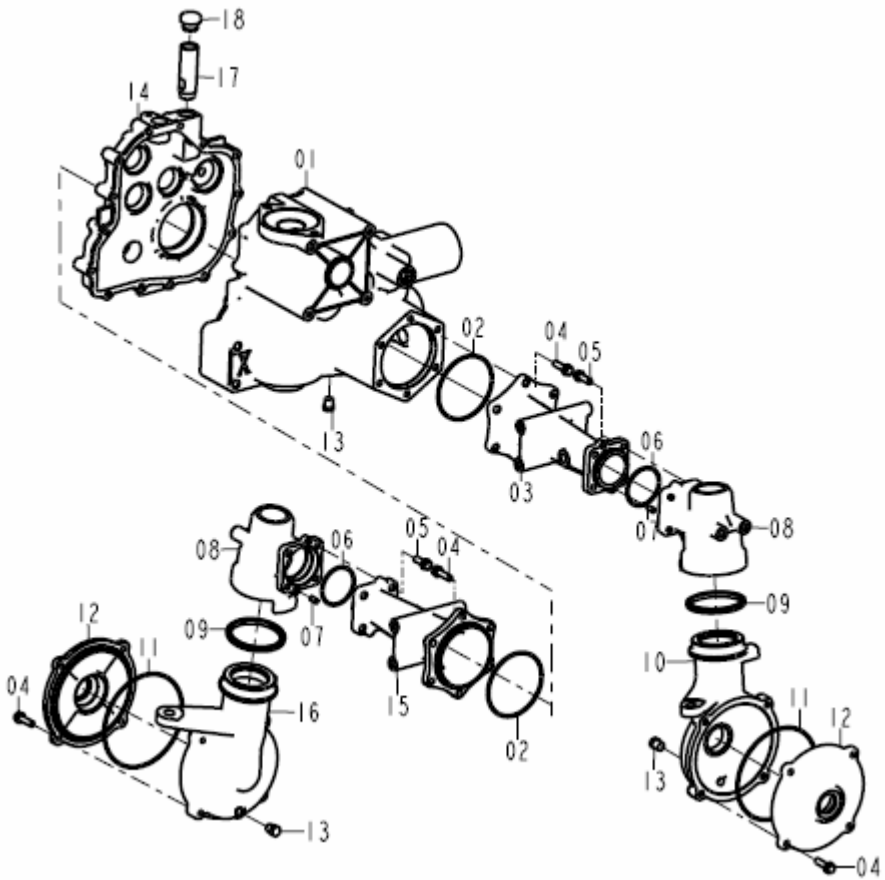

NOTE	

PDF Complete
Your complimentary use period has ended. Thank you for using PDF Complete.
Click Here to upgrade to Unlimited Pages and Expanded Features

201	앞 차축	PD60	Year / Month 2009 / 02

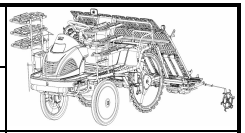

FIG.	NO.	부품번호	품명	PART NAME	수량	규격	비고	메모
201	01	20082010012	체인지미션(좌)	CASE , LH/TRANSMISSION/CHANGE	1			
201	02	V7211031095	O링(G)	O-RING , G	2	G95		
201	03	20083100011A	케이스(상/좌/내)	CASE , UPR/LH/IN	1			
201	04	V2173608030	소형육각볼트보통(S)	BOLT , HEX/S	16	M8x30(S)		
201	05	V2173608030	소형육각볼트보통(S)	BOLT , HEX/S	8	M8x30(S)		
201	06	V7211031055	O링(G)	O-RING , G	2	G55		
201	07	V5201008014	평행핀(A)	PIN, PARALLEL	4	8X14		
201	08	20083110110A	케이스(상/외)	CASE , UPR/OUT	2			
201	09	20083100050	오일실(75X85X06)	SEAL , OIL/75X85X06	2	758506		
201	10	20083110010C	케이스(좌/하)	CASE , LH/LOW	1			
201	11	V7211031140	O링(G)	O-RING , G	2	G140		
201	12	20083120010	최종케이스커버	COVER , CASE/FINAL	2			
201	13	79552010260A	드레인플러그(1/4)	PLUG , DRAIN/PT1/4	3			
201	14	20082010022	체인지미션(우)	CASE , RH/TRANSMISSION/CHANGE	1			
201	15	20083100071A	케이스(상/우/내)	CASE , UPR/RH/IN	1			
201	16	20083110060B	케이스(우/하)	CASE , RH/LOW	1			
201	17	20082010030A	플러그받침	SUPPORT , PLUG	1			
201	18	21111012100	주유플러그조합	CAP , OILING	1			

NOTE	

202	입력축	PD60	Year / Month 2009 / 02	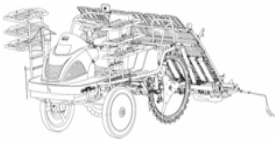

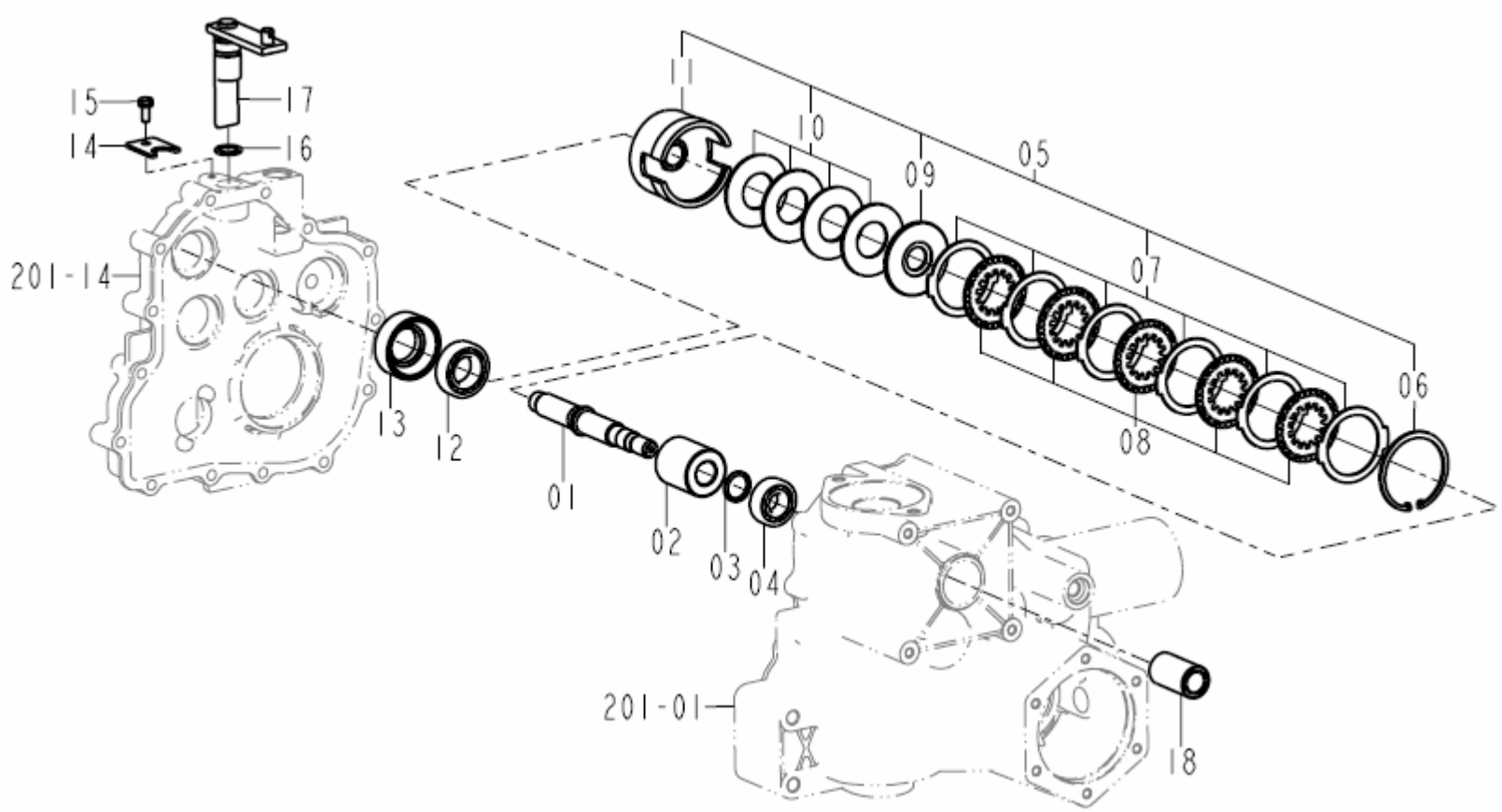

NOTE	

PDF Complete
Your complimentary use period has ended. Thank you for using PDF Complete.
Click Here to upgrade to Unlimited Pages and Expanded Features

202	입력축	PD60	Year / Month 2009 / 02

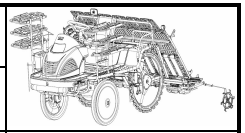

FIG.	NO.	부품번호	품명	PART NAME	수량	규격	비고	메모
202	01	20082020010C	입력축	SHAFT, INPUT	1			
202	02	20082020030A	기어(14)	GEAR , 14	1			
202	03	20082020020A	와셔(20X26X2)	WASHER , 20X26X2	1			
202	04	V6001106203	볼베어링	BEARING , BALL	1	6203		
202	05	20082022100	메인클러치 ASSY	CLUTCH ASSY , MAIN	1			
202	06	V7051400650	C형멈춤링(구멍용)	C-RING , HOLE	1	65		
202	07	20082022140	분리판(클러치)	PLATE , SEPARATE/CLUTCH	6			
202	08	20082022150A	디스크플레이트(메인)	PLATE , DISC/MAIN	5			
202	09	20082022130A	스프링받침(메인)	PLATE , 4.0/MAIN	1			
202	10	20082022120A	접시스프링	SPRING , CONE	1			
202	11	20082022110A	메인클러치케이스	CASE , CLUTCH/MAIN	1			
202	12	V6001106005	볼베어링	BEARING , BALL	1	6005		
202	13	20082020040D	메인클러치허브	HUB , CLUTCH/MAIN	1			
202	14	20082140040B	고정플레이트	PLATE , LOCK	1			
202	15	V2113606016	육각볼트(S)	BOLT , HEX /S	1	M6x16(S)		
202	16	V7201024018	O링(P)	O-RING , P	1	P18		
202	17	20082402400A	주클러치캠축 COMP	CAM COMP , CLUTCH/MAIN	1			
202	18	20082020060B	커플링	COUPLING	1			

NOTE	

203	변속기어(1)	PD60	Year / Month 2009 / 02	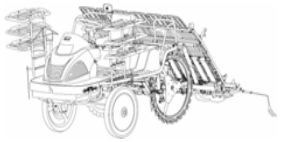

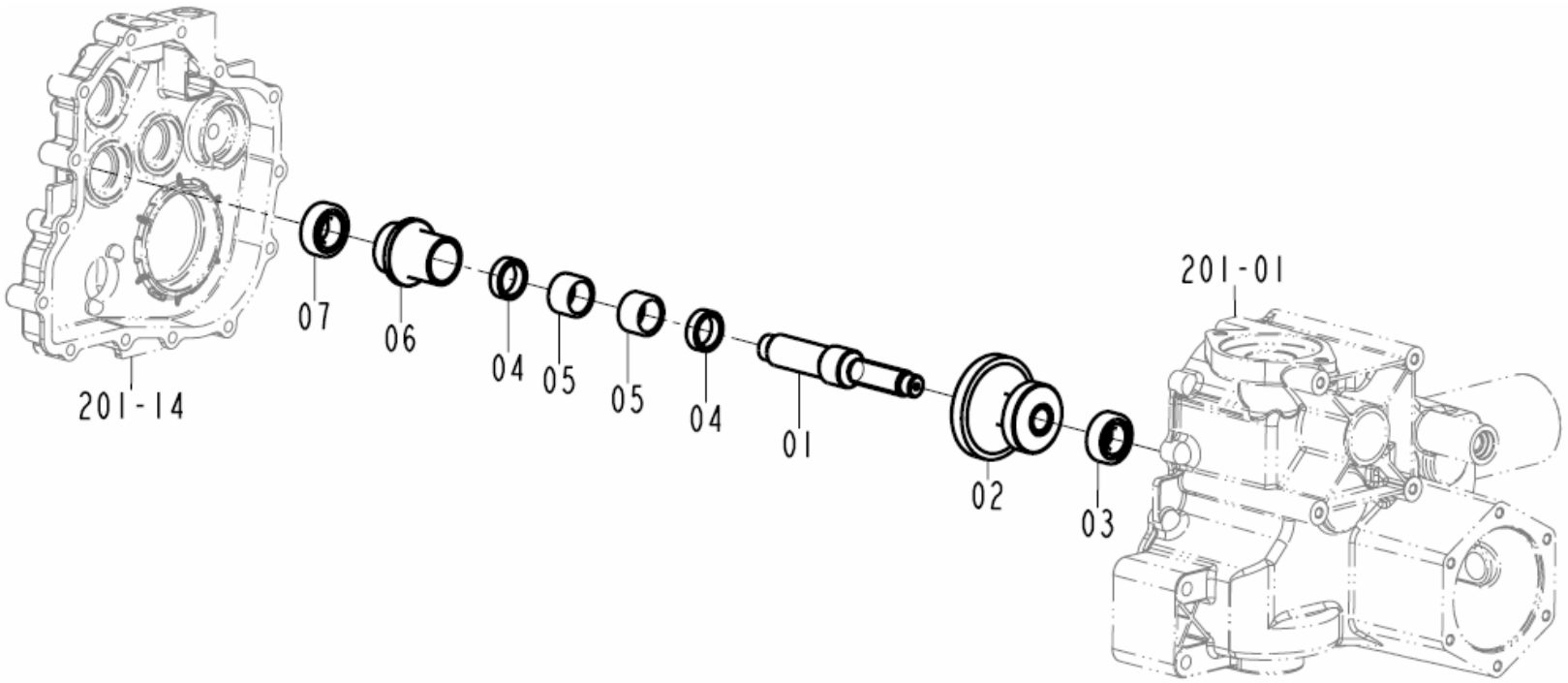

NOTE	

PDF Complete
Your complimentary use period has ended. Thank you for using PDF Complete.
Click Here to upgrade to Unlimited Pages and Expanded Features

203	변속기어(1)	PD60	Year / Month 2009 / 02

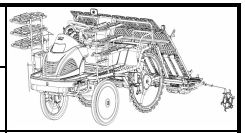

FIG.	NO.	부품번호	품명	PART NAME	수량	규격	비고	메모
203	01	20082030010A	카운터축	SHAFT , COUNTER	1			
203	02	20082030021	기어(16-31)	GEAR , 16-31	1			
203	03	V6001106203	볼베어링	BEARING , BALL	1	6203		
203	04	20082030051	클러치부시	BUSH , CLUTCH	2			
203	05	20082030040	원웨이클러치/25X32X20	CLUTCH , ONE WAY/25X32X20	2			
203	06	20082030030A	기어(19)	GEAR , 19	1			
203	07	V6001106004	볼베어링	BEARING , BALL	1	6004		

NOTE	

204	변속기어(2)	PD60	Year / Month 2009 / 02	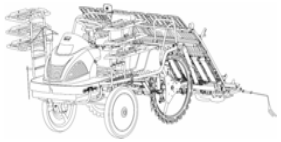

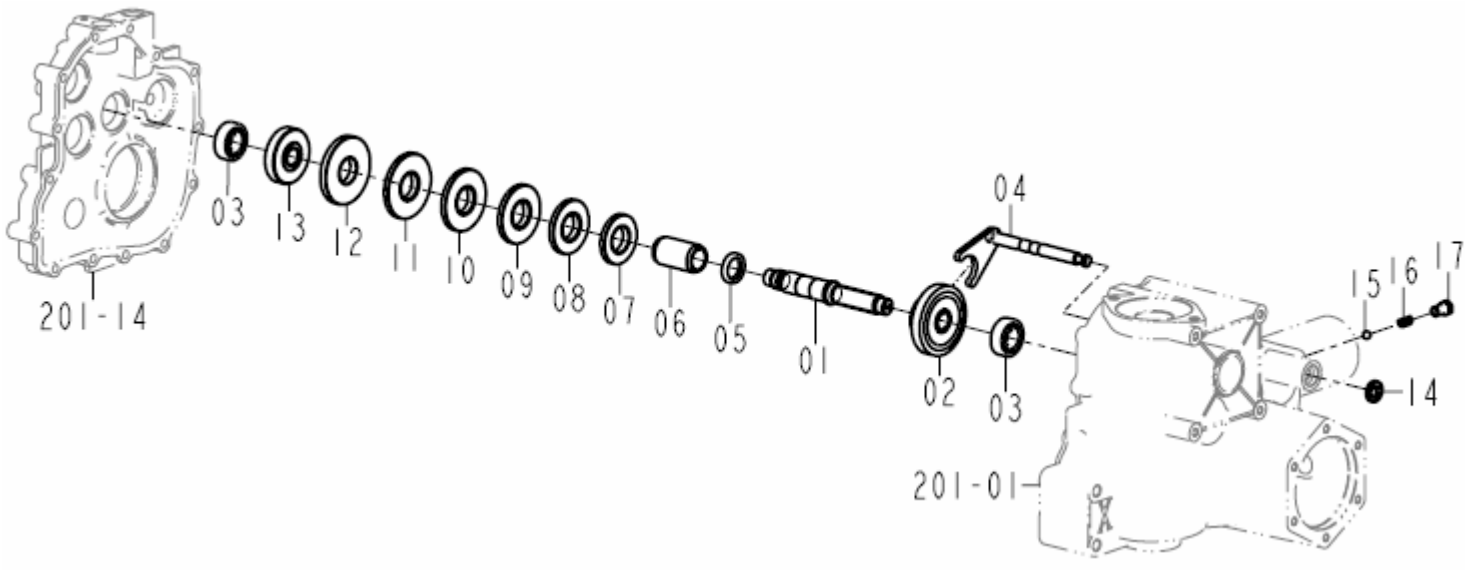

NOTE	

PDF Complete
Your complimentary use period has ended. Thank you for using PDF Complete.
Click Here to upgrade to Unlimited Pages and Expanded Features

204	변속기어(2)	PD60	Year / Month 2009 / 02

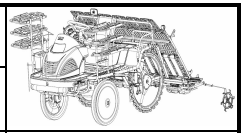

FIG.	NO.	부품번호	품명	PART NAME	수량	규격	비고	메모
204	01	20082040010A	변속축	SHAFT , CHANGE	2			
204	02	20082040121	기어(23-16)	GEAR , 23-16	18			
204	03	V6001106203	볼베어링	BEARING , BALL	2	6203		
204	04	20082102101	주변속시프터 COMP	SHIFTER COMP , CHANGE/MAIN	1			
204	05	20082040020A	사이드클러치축(좌)	SPACER , 23X34X5	1			
204	06	20082040030B	식부아이들축	SHAFT , IDLE/PLANTING	2			
204	07	20082040040B	구동기어(18)	GEAR , 18/DR	1			
204	08	20082040050B	구동기어(21)	GEAR , 20/DR	1			
204	09	20082040060B	구동기어(23)	GEAR , 22/DR	1			
204	10	20082040070B	구동기어(24)	GEAR , 24/DR	1			
204	11	20082040080A	구동기어(26)	GEAR , 26/DR	1			
204	12	20082040090B	구동기어(27)	GEAR , 27/DR	1			
204	13	20082040110B	구동기어(17)	GEAR , 17/DR	1			
204	14	21457510030A	오일실(TC122204)	SEAL , OIL(TC122204)	1	122204		
204	15	V6802000010	강구	BALL , STEEL	1	5/16		
204	16	13022250030	시프터스프링	SPRING , SHIFTER	1			
204	17	21111070040	쉬프터스프링누름보울트	BOLT , SHIFT SPRING	1			

NOTE	

205	차동기어	PD60	Year / Month 2009 / 02	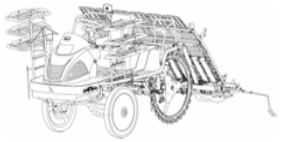

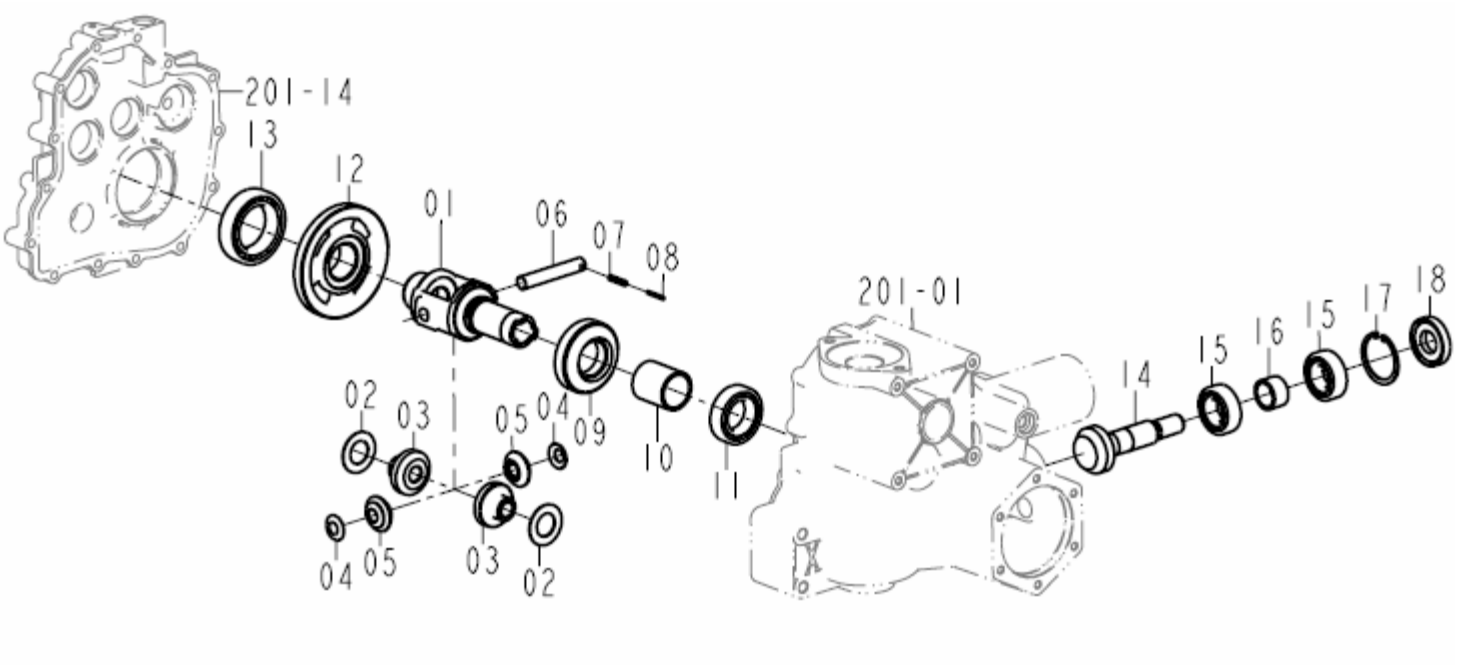

NOTE	

PDF Complete
Your complimentary use period has ended. Thank you for using PDF Complete.
Click Here to upgrade to Unlimited Pages and Expanded Features

205	차동기어	PD60	Year / Month 2009 / 02

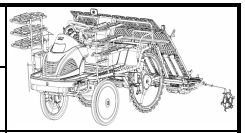

FIG.	NO.	부품번호	품명	PART NAME	수량	규격	비고	메모
205	01	20082050010E	디프케이스	CASE , DIFF	1			
205	02	20082050020	와셔(25X45X1)	WASHER , 25X45X1	2			
205	03	20082050030	디프사이드기어(15)	GEAR , 15/DIFF SIDE	2			
205	04	20082050040	구면와셔	WASHWER , SPHERICAL	1			
205	05	20082050050A	디프기어(11)	GEAR , 11/DIFF	2			
205	06	20082050060A	피니언축	SHAFT , PINION	1			
205	07	V5801405025	스프링핀	PIN , SPRING	1	5X25		
205	08	V5801403025	스프링핀	PIN , SPRING	1	3X25		
205	09	20082050090A	베벨기어(20)	GEAR , BEVEL/20	1			
205	10	20082050110A	간격통(36X42X48)	SPACER , 36X42X48	1			
205	11	V6001106007	볼베어링	BEARING , BALL	1	6007		
205	12	20082050080B	기어(39)	GEAR , 39	1			
205	13	V6001106010	볼베어링	BEARING , BALL	1	6010		
205	14	20082060010	리어출력축	SHAFT , OUT/REAR	1			
205	15	V6001106205	볼베어링	BEARING , BALL	2	6205		
205	16	20082060020	간격통(26X32X20)	SPACER , 26X32X20	2			
205	17	V7051400520	C형멈춤링(구멍용)	C-RING , SHAFT	1	52		
205	18	V7441255210	오일실(D)	SEAL , OIL/D	1	255210		

NOTE	

207	주간축	PD60	Year / Month 2009 / 02	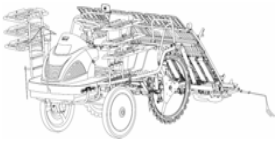

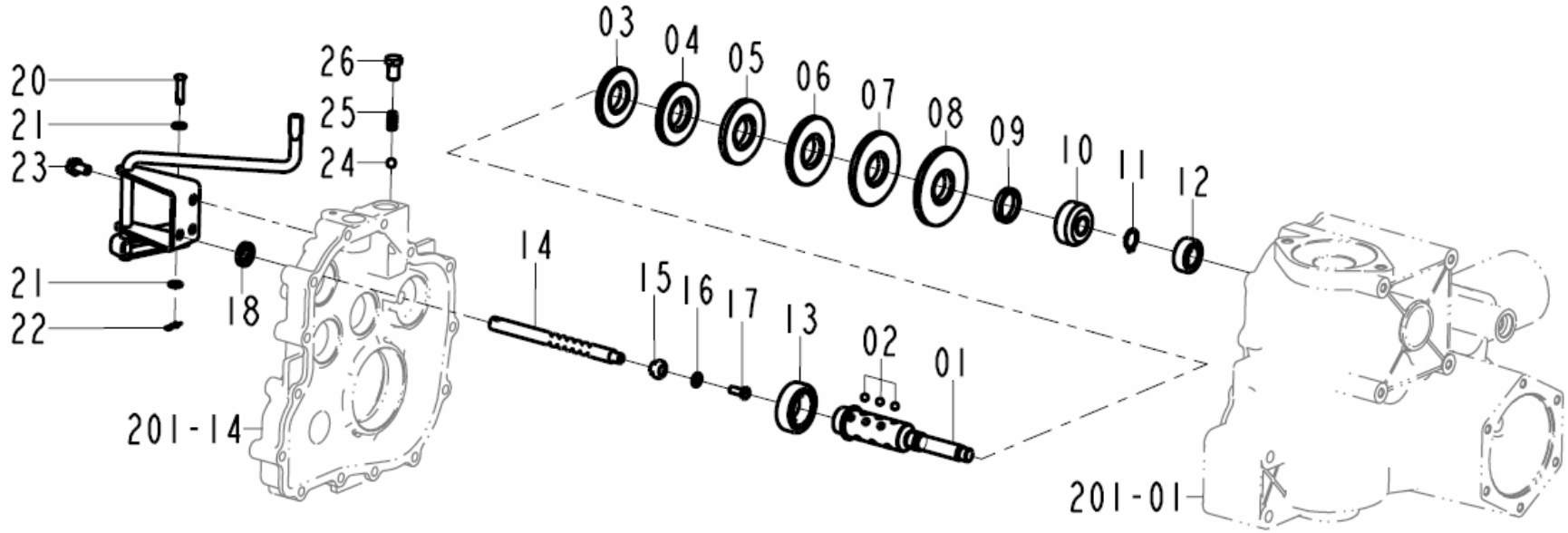

NOTE

PDF Complete
Your complimentary use period has ended. Thank you for using PDF Complete.
Click Here to upgrade to Unlimited Pages and Expanded Features

207	주간축	PD60	Year / Month 2009 / 02

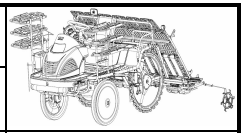

FIG.	NO.	부품번호	품명	PART NAME	수량	규격	비고	메모
207	01	20082070010F	주간변속축	SHAFT , CHANGE/HILL SPACE	1			
207	02	V6802000008	강구	BALL , STEEL	18	1/4		
207	03	20082070020C	종동기어(20)	GEAR , 20/DN	1			
207	04	20082070030B	종동기어(21)	GEAR , 21/DN	1			
207	05	20082070040B	종동기어(22)	GEAR , 23/DN	2			
207	06	20082070050C	종동기어(24)	GEAR , 25/DN	2			
207	07	20082070060C	종동기어(26)	GEAR , 27/DN	1			
207	08	20082070070C	종동기어(28)	GEAR , 29/DN	1			
207	09	20082070080A	간격통(25X32X6.5)	SPACER , 27×36×6.5	1			
207	10	20082070091	베벨기어(10)	GEAR , BEVEL/11	1			
207	11	V7041400170	C형멈춤링(축용)	C-RING , SHAFT	1	17		
207	12	V6001106201	볼베어링	BEARING , BALL	1	6201		
207	13	V6001106005	볼베어링	BEARING , BALL	1	6005		
207	14	20082090210A	주간변속스테이	STAY , SHIFTER/HILL SPACE	1			
207	15	20082090110A	롤러	ROLLER	1			
207	16	20082090030A	와셔	WASHER	1			
207	17	20082090040A	볼트	BOLT	1			
207	18	21457510030	오일실(TC122204)	SEAL , OIL(TC122204)	1	122204		
207	19	20082092100B	식부변속레버 COMP	LEVER COMP , CHANGE/PLANTING	1			
207	20	20086090010	핀(06X22)	PIN , 06X22	1			
207	21	V4111600060	평와셔	WASHER , PLAIN	2	M6		
207	22	21306010180	헤어핀(6)	PIN , SNAP(6)	1			
207	23	V2173608016	소형육각볼트보통(S)	BOLT , HEX/S	3	M8x16(S)		
207	24	V6802000010	강구	BALL , STEEL	1	5/16		
207	25	13022250030	시프터스프링	SPRING , SHIFTER	1			
207	26	21111070040	쉬프터스프링누름보울트	BOLT , SHIFT SPRING	1			

NOTE

208	식부출력축	PD60	Year / Month 2009 / 02	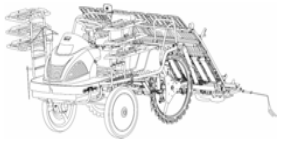

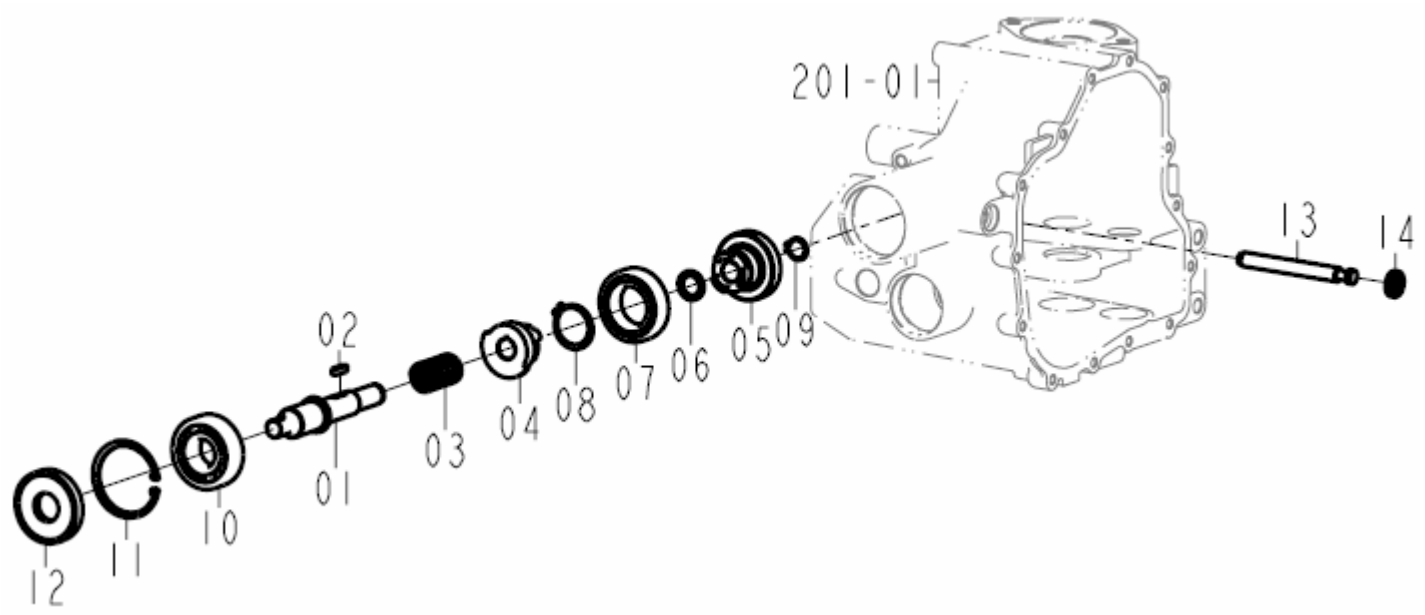

NOTE	

PDF Complete
Your complimentary use period has ended. Thank you for using PDF Complete.
Click Here to upgrade to Unlimited Pages and Expanded Features

208	식부출력축	PD60	Year / Month 2009 / 02

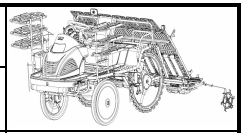

FIG.	NO.	부품번호	품명	PART NAME	수량	규격	비고	메모
208	01	20082080010B	식부출력축	SHAFT , OUT/PLANTING	1			
208	02	35554040140	반송구동풀리 키	KEY	1			
208	03	21444190210	스프링 (HC041)	SPRING , HC041	1			
208	04	20082080030C	식부클러치캠	CAM , CLUTCH/PLANTING	1			
208	05	20082080041	베벨기어(17)	GEAR , BEVEL/17	1			
208	06	20086050070B	와셔(17X25X2)	WASHER , 17X25X2	1			
208	07	V6001106007	볼베어링	BEARING , BALL	1	6007		
208	08	V7041400350	C형멈춤링(축용)	C-RING , SHAFT	1	35		
208	09	V7041400170	C형멈춤링(축용)	C-RING , SHAFT	1	17		
208	10	V6001106305	볼베어링	BEARING , BALL	1	6305		
208	11	V7051400620	C형멈춤링(구멍용)	C-RING , SHAFT	1	62		
208	12	V7441256210	오일실(D)	SEAL , OIL/D	1	256210		
208	13	20082130010D	식부클러치핀	PIN , CLUTCH/PLANTING	1			
208	14	21457510030A	오일실(TC122204)	SEAL , OIL(TC122204)	1	122204		

NOTE	

213	식부클러치	PD60	Year / Month 2009 / 02	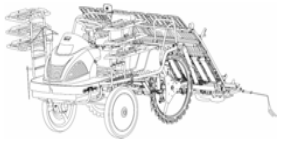

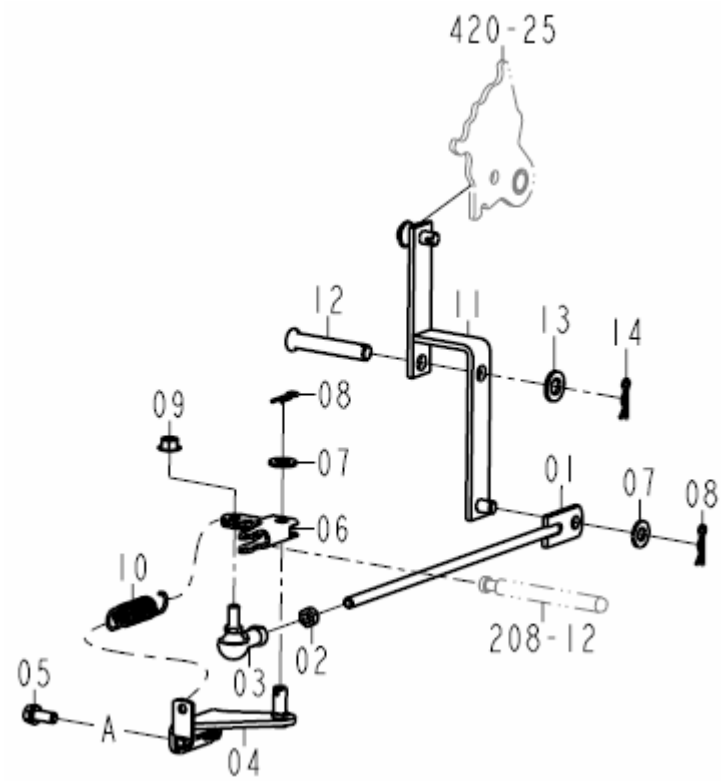

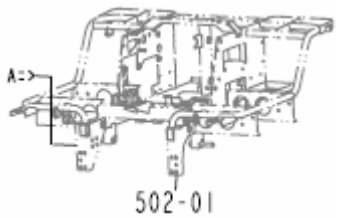

NOTE	

PDF Complete
Your complimentary use period has ended. Thank you for using PDF Complete.
Click Here to upgrade to Unlimited Pages and Expanded Features

213	식부클러치	PD60	Year / Month 2009 / 02	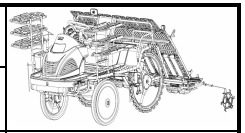

FIG.	NO.	부품번호	품명	PART NAME	수량	규격	비고	메모
213	01	20082132201	식부클러치로드 COMP	ROD COMP , CLUTCH/PLANTING	1			
213	02	V3042600080	소형육각너트보통2종	NUT , HEX/2	1	M8		
213	03	36402200040	엘보(R)	ELBOW , RH	1			
213	04	20082132400A	서포트(식부클러치암) COMP	SUPPORT COMP , ARM/PLANTING	1			
213	05	V2173608020	소형육각볼트보통(S)	BOLT , HEX/S	2	M8x20(S)		
213	06	20082100032	주변속시프터암	ARM , SHIFTER/MAIN	1			
213	07	V4111600100	평와셔	WASHER , PLAIN	2	M10		
213	08	20082100040	헤어핀(D=10)	PIN , SNAP/10	2			
213	09	V3612600080	플랜지붙이육각너트	NUT,HEX WASHER	1	M8		
213	10	20082130030	스프링(HE060)	SPRING , HE060	1			
213	11	20082132300F	식부 클러치 암 COMP	ARM COMP,CLUTCH/PLANTING	1			
213	12	20082130020	핀	PIN	1			
213	13	V4111000120	평와셔	WASHER , PLAIN	1	M12		
213	14	V5601600012	헤어핀(D=12)	PIN , SNAP/12	1			

NOTE	

211	변속레버	PD60	Year / Month 2009 / 02	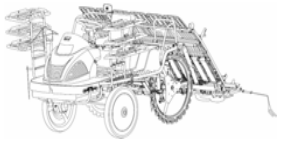

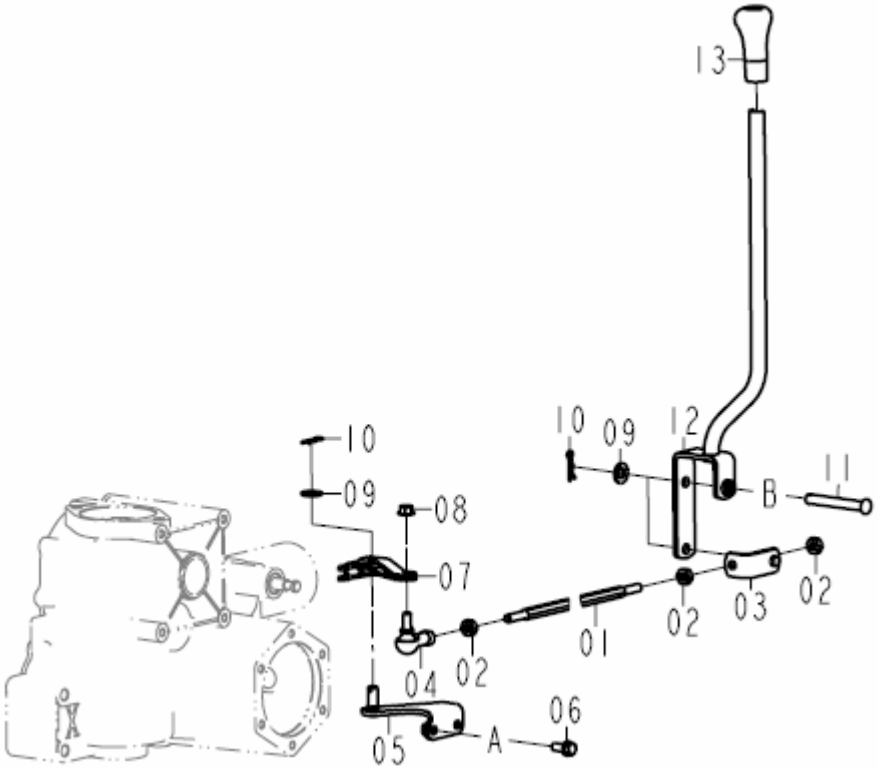

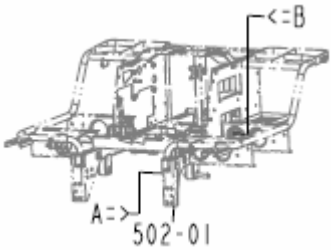

NOTE	

PDF Complete
Your complimentary use period has ended. Thank you for using PDF Complete.
Click Here to upgrade to Unlimited Pages and Expanded Features

211	변속레버	PD60	Year / Month 2009 / 02

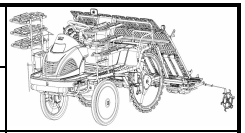

FIG.	NO.	부품번호	품명	PART NAME	수량	규격	비고	메모
211	01	20082110021	체인지로드	ROD , CHANGE	1			
211	02	V3042600080	소형육각너트보통2종	NUT , HEX/2	3	M8		
211	03	20082112400	연결플레이트 COMP	PLATE COMP, LINK	1			
211	04	36402200040	엘보(R)	ELBOW , RH	1			
211	05	20082112301	서포트 COMP	SUPPORT COMP , ARM	1			
211	06	V2173608020	소형육각볼트보통(S)	BOLT , HEX/S	2	M8x20(S)		
211	07	20082100050	주변속시프터암	ARM , SHIFTER/MAIN	1			
211	08	V3612600080	플랜지붙이육각너트	NUT,HEX WASHER	1	M8		
211	09	V4111600100	평와셔	WASHER , PLAIN	3	M10		
211	10	20082100040	헤어핀(D=10)	PIN , SNAP/10	3			
211	11	20082110030B	핀 (10X73)	PIN , 10X73	1			
211	12	20082112200F	체인지레버 COMP	LEVER COMP , CHANGE	1			
211	13	20082110010	손잡이(체인지레버)	GRIP , LEVER/CHANGE	1			

NOTE	

214	디프록로드	PD60	Year / Month 2009 / 02	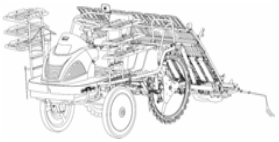

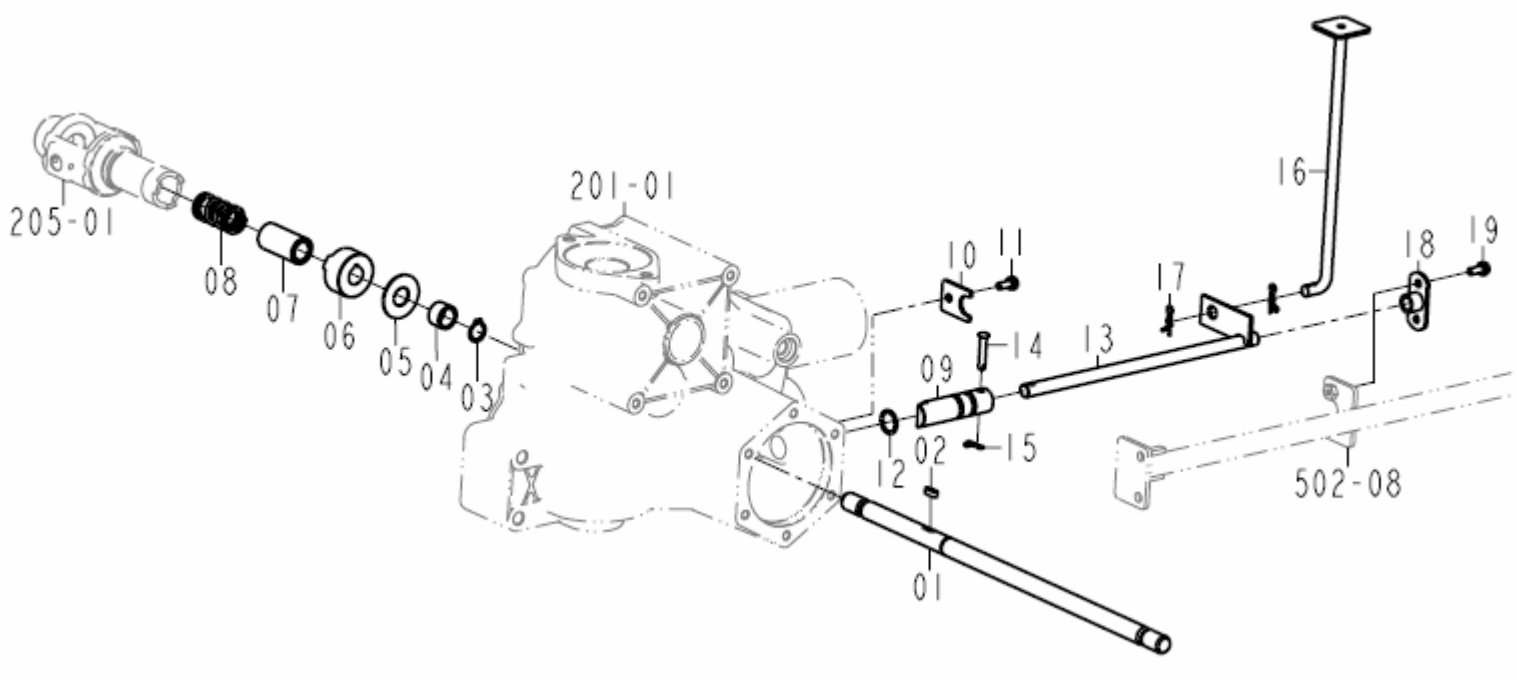

NOTE	

PDF Complete
Your complimentary use period has ended. Thank you for using PDF Complete.
Click Here to upgrade to Unlimited Pages and Expanded Features

214	디프록로드	PD60	Year / Month 2009/ 02	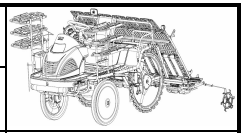

FIG.	NO.	부품번호	품명	PART NAME	수량	규격	비고	메모
214	01	20083100021	전륜구동축(좌)	SHAFT , LH/FR/DRIVING	1			
214	02	20082140070	키(05X05X15)	KEY, 05X05X15	1			
214	03	V7041400170	C형멈춤링(축용)	C-RING , SHAFT	1	17		
214	04	20082140090	스프링(HE)	HUB, 17X22X15	1			
214	05	20082140051	와셔(18X45X01)	WASHER , 18X45X01	1			
214	06	20082140011	디프록 캠	CAM , DIFF LOCK	1			
214	07	20082140060	허브(17X25X50)	HUB , 17X25X50	1			
214	08	20082140020A	스프링(HC050)	SPRING , HC050	1			
214	09	20082140032	디프록축	SHAFT , DIFF LOCK	1			
214	10	20082140040B	고정플레이트	PLATE , LOCK	1			
214	11	V2103606016	육각볼트	BOLT , HEX	1	M6x16		
214	12	V7201024018	O링(P)	O-RING , P	1	P18		
214	13	20082142300B	디프록로드 COMP	ROD COMP , DIFF LOCK	1			
214	14	21444190201	핀(06X29)	PIN , 06X29	1			
214	15	21306010180	헤어핀(6)	PIN , SNAP(6)	1			
214	16	20082142200C	디프록페달 COMP	PEDAL COMP , DIFF LOCK	1			
214	17	39081700200	헤어핀 (8)	PIN , SNAP/8	2			
214	18	20082142400	디프록페달받침 COMP	SUPPORT COMP , PEDAL/DIFF LOCK	1			
214	19	V2113606016	소형육각볼트보통(S)	BOLT , HEX/S	2	M6x16(S)		

NOTE	

230	스티어링기어	PD60	Year / Month 2009 / 02	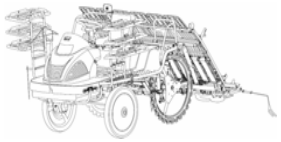

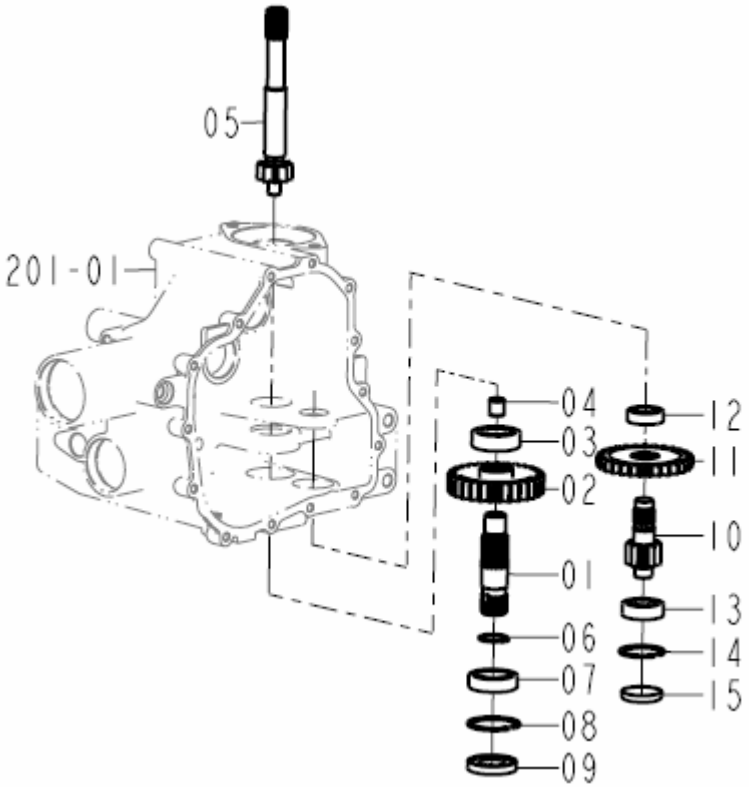

NOTE	

PDF Complete
Your complimentary use period has ended. Thank you for using PDF Complete.
Click Here to upgrade to Unlimited Pages and Expanded Features

230	스티어링기어	PD60	Year / Month 2009 / 02

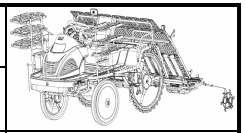

FIG.	NO.	부품번호	품명	PART NAME	수량	규격	비고	메모
230	01	20082320010C	조향출력축	SHAFT , OUT/STEERING	1			
230	02	20082320021	조향출력기어(29)	GEAR , 29/OUT/STEERING	1			
230	03	V6001106204	볼베어링	BEARING , BALL	1	6204		
230	04	20082320030	부시(12X14X15)	BUSH , 12X14X15	1			
230	05	20082300010	조향입력축 COMP	SHAFT, IN/STEERING	1			
230	06	V7041400250	C형멈춤링(축용)	C-RING , SHAFT	1	25		
230	07	V6001106005	볼베어링	BEARING , BALL	1	6005		
230	08	V7051400470	C형멈춤링(구멍용)	C-RING , HOLE	1	47		
230	09	V7441254708	오일실(D)	SEAL , OIL/D	1	254708		
230	10	20082310010B	조향카운터축	SHAFT , COUNTER/STEERING	1			
230	11	20082310020A	조향카운터기어(29)	GEAR , 29/COUNTER/STEERING	1			
230	12	V6001106003	볼베어링	BEARING , BALL	1	6003		
230	13	V6001106203	볼베어링	BEARING , BALL	1	6203		
230	14	V7051400400	C형멈춤링(구멍용)	C-RING , HOLE	1	40		
230	15	20082310030	막이판(40X7.5)	SEAL , PLUG(40X7.5)	1			

NOTE	

250	HST&유압펌프	PD60	Year / Month 2009 / 02	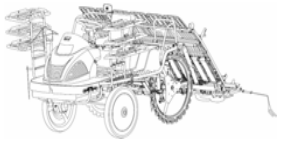

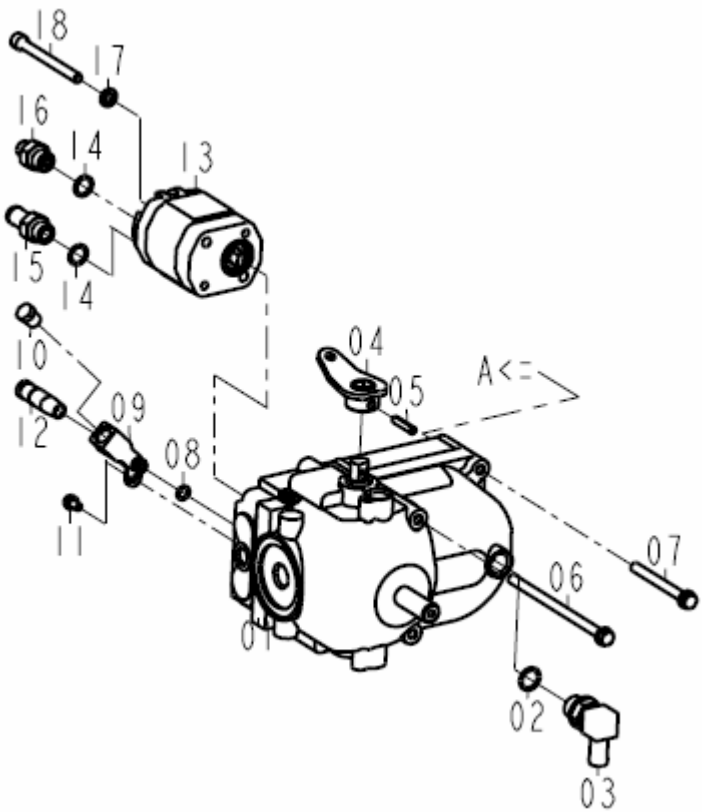

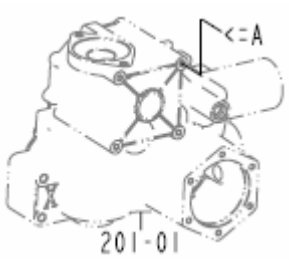

NOTE	

PDF Complete
Your complimentary use period has ended. Thank you for using PDF Complete.
Click Here to upgrade to Unlimited Pages and Expanded Features

250	HST&유압펌프	PD60	Year / Month 2009/ 02

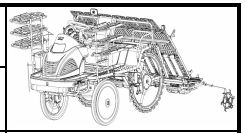

FIG.	NO.	부품번호	품명	PART NAME	수량	규격	비고	메모
250	01	20082502200	HST ASSY , 다이킨/21	HST ASSY , DAIKIN/21	1			
250	02	V7201024016	O링 (P)	O-RING , P	1	P16		
250	03	20084020040	플러그(직각/底压)	PLUG , REACTANGLE/LOW	1			
250	04	20082522200E	컨트롤암 COMP	ARM COMP , CONTROL	1			
250	05	V5801406028	스프링핀	PIN , SPRING	1	6x28		
250	06	V2173608140	소형육각볼트보통(S)	BOLT , HEX/S	2	M8x140(S)		
250	07	V2173608080	소형육각볼트보통(S)	BOLT , HEX/S	2	M8x80(S)		
250	08	V7201019009	O링 (P)	O-RING , P	1	P9		
250	09	20084020120C	HST어댑터	ADAPTER , HST	1			
250	10	79552010260A	드레인플러그(1/4)	PLUG , DRAIN/PT1/4	1			
250	11	V2113606012	소형육각볼트보통(S)	BOLT , HEX/S	1	M6x12(S)		
250	12	21324090040A	플러그(직선/저압)	PLUG , STRAIT/PT1/4	1			
250	13	20084012101	유압펌프 ASSY	PUMP ASSY , HYDRAULIC	1			
250	14	V7201024014	O링 (P)	O-RING , P	2	P14		
250	15	20084020010	플러그(직선/底压)	PLUG , STRAIT/LOW	1			
250	16	20083030010A	플러그(직선/고압)	PLUG , STRAIT/HIGH	1			
250	17	V4011600080	스프링와셔	WASHER , SPRING	2	M8		
250	18	V2205408095	육각홈볼트	BOLT	2	M8x95		

NOTE	

251	HST레버	PD60	Year / Month 2009 / 02	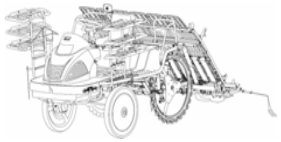

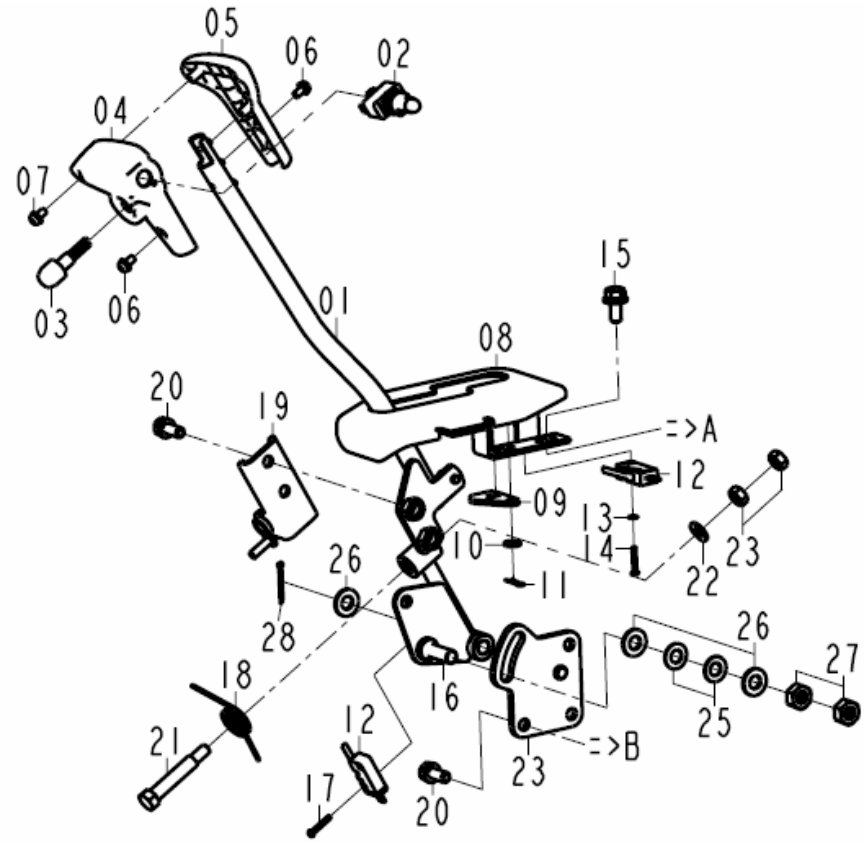

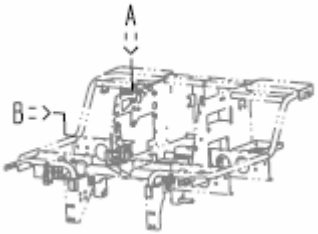

NOTE	

PDF Complete
Your complimentary use period has ended. Thank you for using PDF Complete.
Click Here to upgrade to Unlimited Pages and Expanded Features

251	HST레버	PD60	Year / Month 2009 / 02

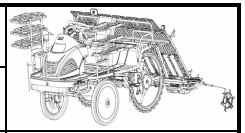

FIG.	NO.	부품번호	품명	PART NAME	수량	규격	비고	메모
251	01	20082512203	부변속레버 COMP	LEVER COMP , CHANGE	1			
251	02	20085402130	조작스위치ASSY	CONTROL SWITCH ASSY	1			
251	03	20085332200	스위치(혼정지) ASSY	SWITCH ASSY , STOP/BUZZER	1			
251	04	20082514022	HST손잡이(전)	HAND LEVER, FR/HST	1			
251	05	20082514012	HST손잡이(후)	HAND LEVER, RR/HST	1			
251	06	V1222605008	십자홈냄비작은나사(SP)	SCREW , C/R PAN/SP	4	M5x8(SP)		
251	07	V1922604012	태핑나사	SCREW , TAPPING	2	M4x12		
251	08	20085112601	레버가이드 COMP/K	PLATE COMP , CONTROL/K	1			
251	09	20082510060A	스위치플레이트	PLATE, SWITCH	1			
251	10	V4111600060	평와셔	WASHER , PLAIN	2	M6		
251	11	21306010180	헤어핀(6)	PIN , SNAP(6)	2			
251	12	20085373000	리미트스위치 ASSY	SWITCH ASSY	2			
251	13	V4111600030	평와셔	WASHER , PLAIN	2	M3		
251	14	V1112603016	십자홈냄비작은나사	SCREW , C/R PAN	2	M3x16		
251	15	V2183608020	소형육각볼트보통(SP)	BOLT , HEX/SP	2	M8x20(SP)		
251	16	20082513102B	연결암 COMP	ARM COMP , LINKAGE/FIX	1			
251	17	V1222603020	십자홈냄비작은나사(SP)	SCREW , C/R PAN/SP	2	M3x20(SP)		
251	18	20082510040B	스프링(HT)	SPRING	1			
251	19	20082513301C	연결판 COMP	PLATE COMP , LINKAGE	1			
251	20	V2173608020	소형육각볼트보통(S)	BOLT , HEX/S	2	M8x20(S)		
251	21	20082510030A	볼트(M10X60)	BOLT , M10X60	1			
251	22	V4111600080	평와셔	WASHER , PLAIN	1	M8		
251	23	V3042600080	소형육각너트보통2종	NUT , HEX/2	2	M8		
251	24	20082512902	레버고정판 COMP	PLATE COMP , FIX/LEVER	1			
251	25	21307130030A	접시스프링	SPRING , CONE	2			
251	26	V4111600100	평와셔	WASHER , PLAIN	3	M10		
251	27	V3042600100	소형육각너트보통2종	NUT , HEX/2	2	M10		
251	28	V5001925025	분할핀	PIN , SPLIT	1	2.5X25		

NOTE	

252	부변속 연결로드	PD60	Year / Month 2009 / 02	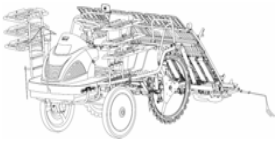

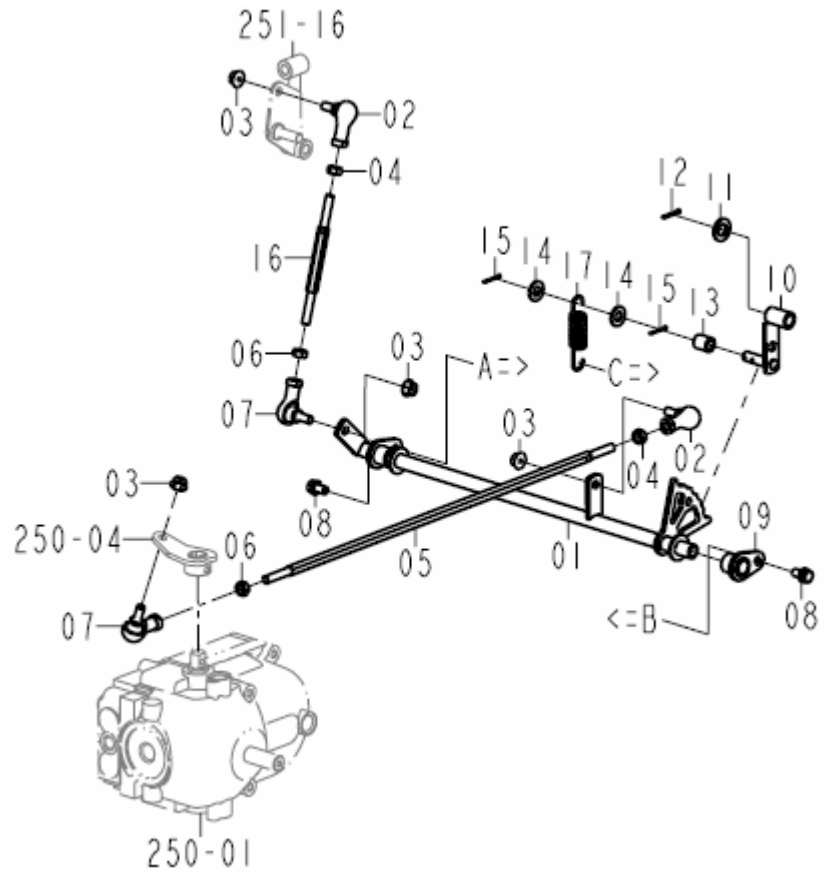

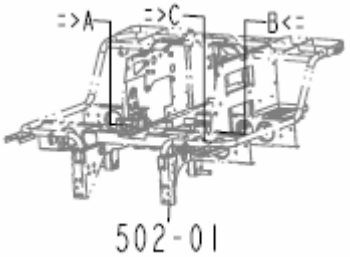

NOTE	

PDF Complete
Your complimentary use period has ended. Thank you for using PDF Complete.
Click Here to upgrade to Unlimited Pages and Expanded Features

252	부변속 연결로드	PD60	Year / Month 2009 / 02

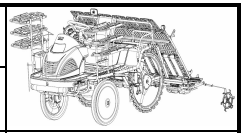

FIG.	NO.	부품번호	품명	PART NAME	수량	규격	비고	메모
252	01	20082523201	연결암 COMP	ARM COMP , LINKAGE	1			
252	02	36402200050	엘보(L)	ELBOW , LH	2			
252	03	V3802600080	플랜지붙이육각너트	NUT , HEX FLANGE	4	M8		
252	04	37471550110	너트(L)	NUT , L	2	M8		
252	05	20082520011	HST연결로드	ROD,LINKING	1			
252	06	V3042600080	소형육각너트보통2종	NUT , HEX/2	2	M8		
252	07	36402200040	엘보(R)	ELBOW , RH	2			
252	08	V2173608020	소형육각볼트보통(S)	BOLT , HEX/S	2	M8x20(S)		
252	09	20082513001	고정플레이트 COMP	PLATE COMP , FIX	1			
252	10	20082523302	고정롤러 COMP	ROLLING COMP , ROLLLING CONTROL/HST	1			
252	11	V4111600120	평와셔	WASHER , PLAIN	1	M12		
252	12	V5001925025	분할핀	PIN , SPLIT	1	2.5X25		
252	13	20084200040A	롤러(10X15X18)	ROLLER , 10X15X18	1			
252	14	V4111600100	평와셔	WASHER , PLAIN	2	M10		
252	15	V5001920020	분할핀	PIN , SPLIT	2	2.0X20		
252	16	20082520030	로드	ROD	1			
252	17	20082130060	스프링(HE080)	SPRING , HE080	1			

NOTE	

301	조향핸들	PD60	Year / Month 2009 / 02	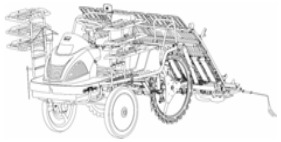

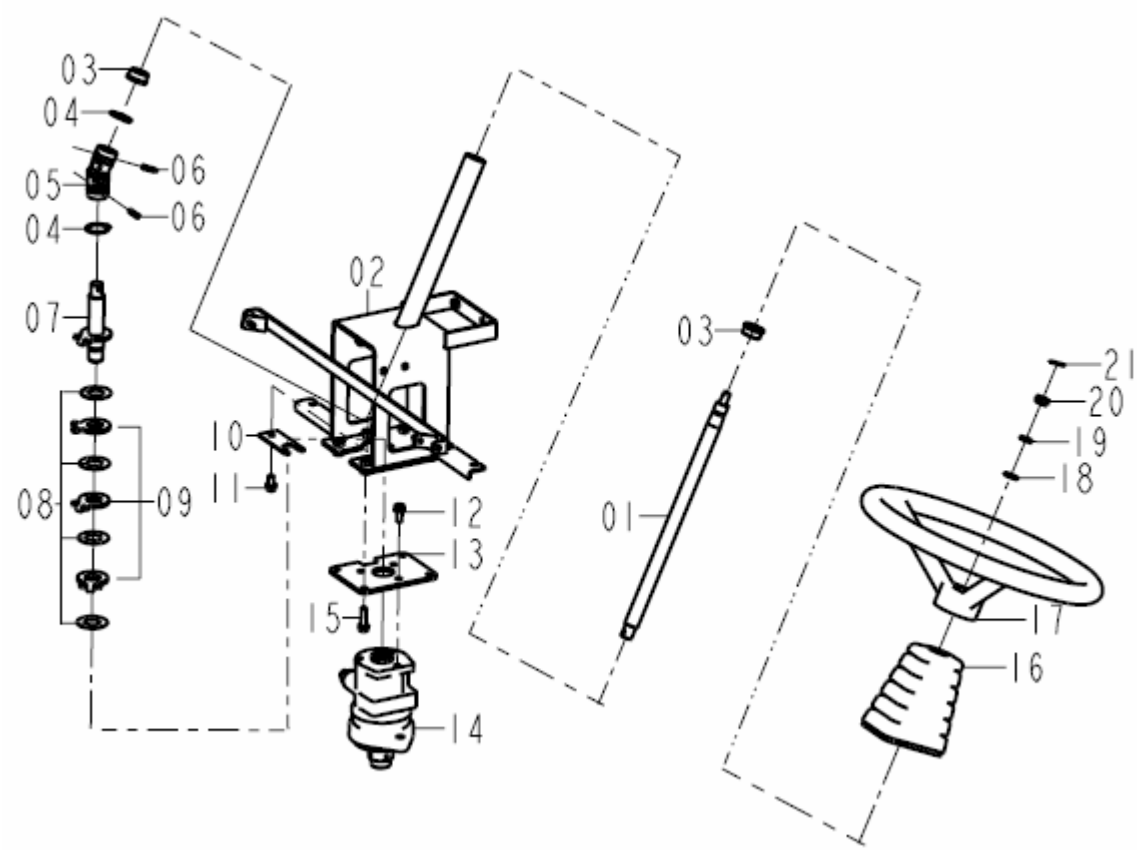

NOTE	

PDF Complete
Your complimentary use period has ended. Thank you for using PDF Complete.
Click Here to upgrade to Unlimited Pages and Expanded Features

301	조향핸들	PD60	Year / Month 2009 / 02

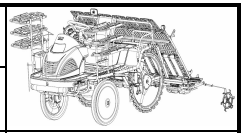

FIG.	NO.	부품번호	품명	PART NAME	수량	규격	비고	메모
301	01	20083020010D	조향축(상)	SHAFT , UPR/STREERING	1			
301	02	20083012402A	조향포스트 COMP	POST COMP , STEERING	1			
301	03	20083010010A	조향부시(상)	BUSH , UPR/STEERING	2			
301	04	V7041400300	C형멈춤링(축용)	C-RING , SHAFT	2	30		
301	05	21443012000	유니버설 조인트 완성	JOINT ASSY , UNIVERSAL	1			
301	06	V5201005025	핀	PIN,PARALLEL/A	2	5.5x25		
301	07	20083022200B	조향축(하) COMP	SHAFT COMP , LOW/STEERING	1			
301	08	20083020040	와셔	WASHER	4			
301	09	20083022220A	정지플레이트	PLATE , STOP	3			
301	10	20083012611	조향축지지플레이트 COMP	PLATE COMP , SHAFT/STEERING	1			
301	11	V2173608016	소형육각볼트보통(S)	BOLT , HEX/S	1	M8x16(S)		
301	12	V2173608020	소형육각볼트보통(S)	BOLT , HEX/S	3	M8x20(S)		
301	13	20083012310B	조향베이스	BASE , STEERING	1			
301	14	20083032100	토크제네레이터 ASSY	VALVE ASSY , STEERING	1			
301	15	V2173608030	소형육각볼트보통(S)	BOLT , HEX/S	1	M8x30(S)		
301	16	20085060060A	포스트커버	COVER , POST	1			
301	17	20083012200	조향핸들 GRP	WHEEL GRP , STEERING	1			
301	18	V4111600120	평와셔	WASHER , PLAIN	1	M12		
301	19	V4011600120	스프링와셔	WASHER , SPRING	1	M12		
301	20	V3232600120	소형육각너터	NUT,HEX SLOT & CASTLE	1	M12		
301	21	V5001925025	분할핀	PIN , SPLIT	1	2.5X25		

NOTE	

307	조향 로드	PD60	Year / Month 2009 / 02	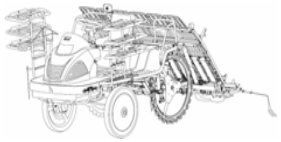

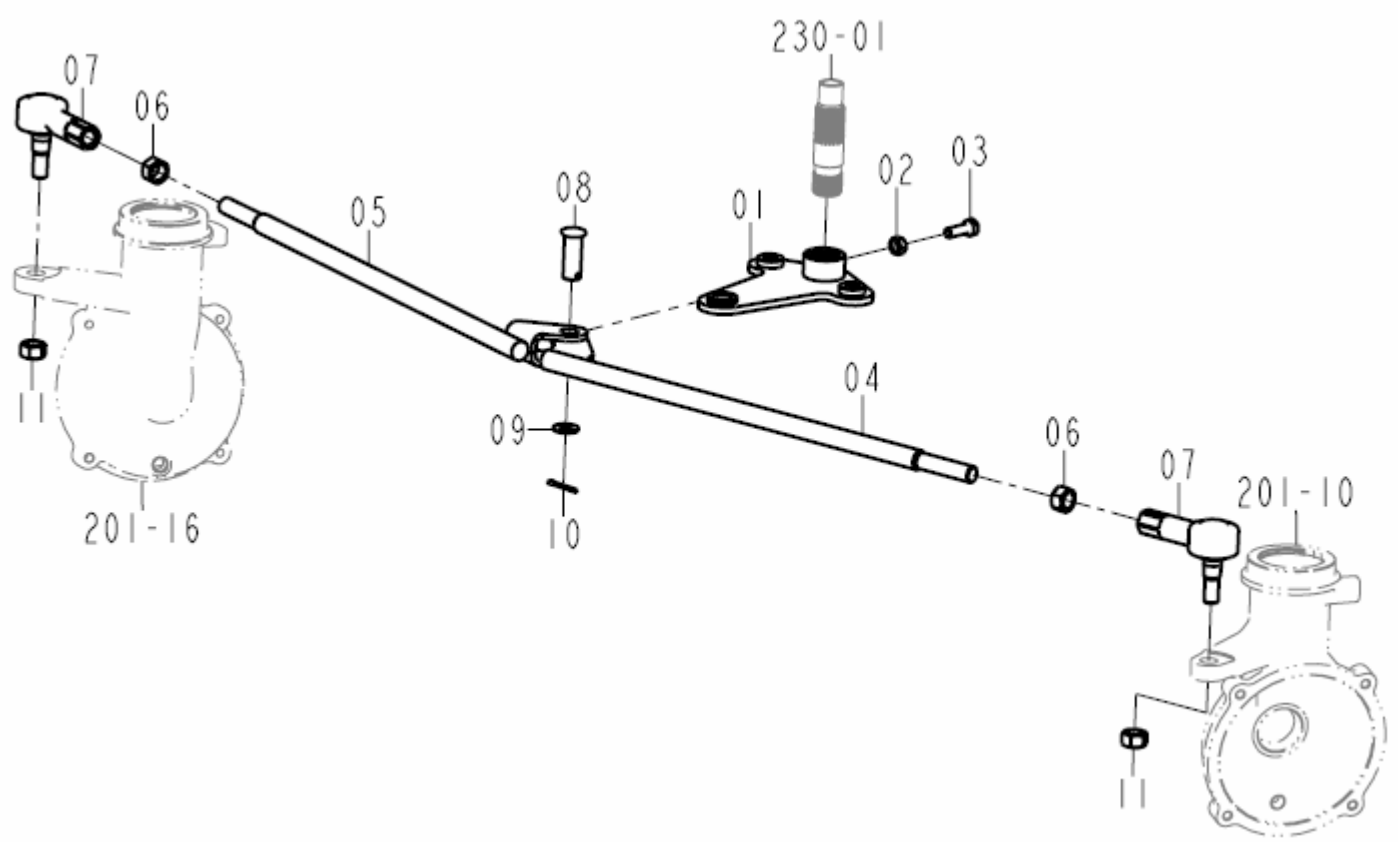

NOTE	

PDF Complete
Your complimentary use period has ended. Thank you for using PDF Complete.
Click Here to upgrade to Unlimited Pages and Expanded Features

307	조향 로드	PD60	Year / Month 2009/ 02

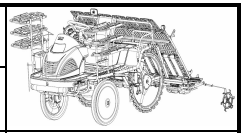

FIG.	NO.	부품번호	품명	PART NAME	수량	규격	비고	메모
307	01	20083073000C	피트먼암 COMP	ARM COMP , PITMAN	1			
307	02	V3042600080	소형육각너트보통2종	NUT , HEX/2	1	M8		
307	03	V2013608030	소형육각볼트(보통)	BOLT , HEX	1	M8x30		
307	04	20083072200C	타이로드(좌) COMP	ROD COMP , LH/TIE/6	1			
307	05	20083072300C	타이로드(우) COMP	ROD COMP , RH/TIE/6	1			
307	06	V3042600140	소형육각너트보통2종	NUT, HEX/2	2	M14		
307	07	21463023100	타이로드 엔드(우) ASSY	END ASSY , RH TIE ROD	2			
307	08	20083070010	핀(15X35)	PIN , 15X35	1			
307	09	V4111600140	평와셔	WASHER , PLAIN	1	M14		
307	10	V5001930025	분할핀	PIN , SPLIT	1	3.0X25		
307	11	V3342600140	소형육각너트가는2종	NUT , HEX FINE/2	2	M14		

NOTE	

308	자동선회 로드	PD60	Year / Month 2009 / 02	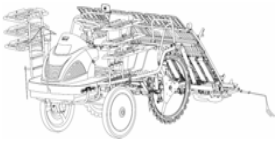

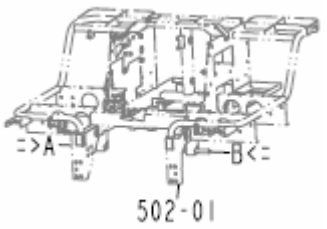

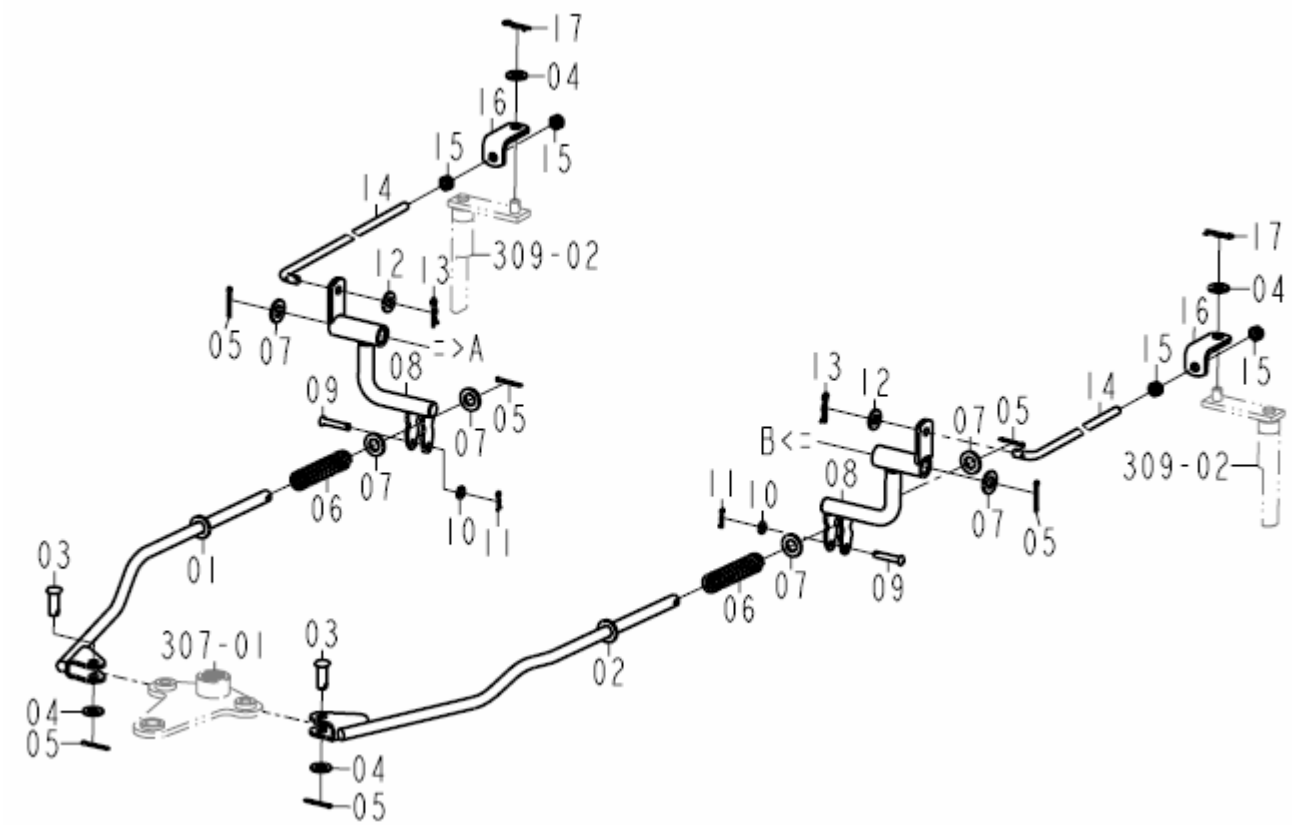

NOTE	

PDF Complete
Your complimentary use period has ended. Thank you for using PDF Complete.
Click Here to upgrade to Unlimited Pages and Expanded Features

308	자동선회 로드	PD60	Year / Month 2009 / 02

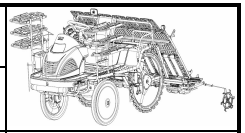

FIG.	NO.	부품번호	품명	PART NAME	수량	규격	비고	메모
308	01	20083082300A	자동선회로드(우) COMP	ROD COMP , FR/RH/TURN	1			
308	02	20083082200C	자동선회로드(좌) COMP	ROD COMP , FR/LH/TURN	1			
308	03	20082410010	핀(10X22)	PIN , 10X22	2			
308	04	V4111600100	평와셔	WASHER , PLAIN	4	M10		
308	05	V5001925025	분할핀	PIN , SPLIT	6	2.5X25		
308	06	20083080010B	스프링(HC066)	SPRING , HC066	2			
308	07	V4111600120	평와셔	WASHER , PLAIN	6	M12		
308	08	20083082400C	클러치암 COMP	ARM COMP , CLUTCH	2			
308	09	21444190201B	핀(06X29)	PIN , 06X29	2			
308	10	V4111600060	평와셔	WASHER , PLAIN	2	M6		
308	11	21306010180	헤어핀(6)	PIN , SNAP(6)	2			
308	12	V4111600080	평와셔	WASHER , PLAIN	2	M8		
308	13	39081700200	헤어핀 (8)	PIN , SNAP/8	2			
308	14	20083080041	선회로드(후)	ROD , RR/TURN	2			
308	15	V3042600080	소형육각너트보통2종	NUT , HEX/2	4	M8		
308	16	20083080030A	선회플레이트	PLATE , TURN	2			
308	17	20082100040	헤어핀(D=10)	PIN , SNAP/10	2			

NOTE	

309	사이드클러치캠	PD60	Year / Month 2009 / 02	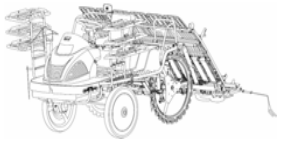

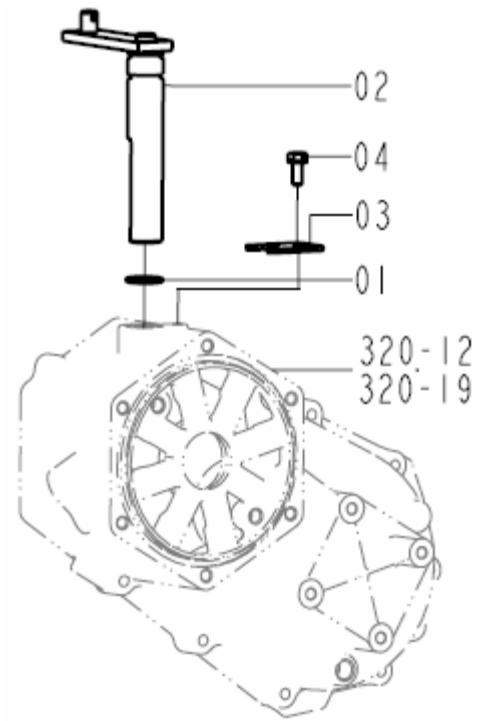

NOTE	

PDF Complete
Your complimentary use period has ended. Thank you for using PDF Complete.
Click Here to upgrade to Unlimited Pages and Expanded Features

309	사이드클러치캠	PD60	Year / Month 2009 / 02

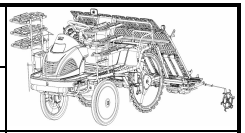

FIG.	NO.	부품번호	품명	PART NAME	수량	규격	비고	메모
309	01	V7201024018	O링(P)	O-RING , P	2	P18		
309	02	20083242300A	사이드클러치캠축 COMP	SHAFT COMP,CAM/CLUTCH/SIDE	2			
309	03	20082140040B	고정플레이트	PLATE , LOCK	2			
309	04	V2103606016	육각볼트	BOLT , HEX	2	M6X16		

NOTE	

311	최종케이스기어	PD60	Year / Month 2009 / 02	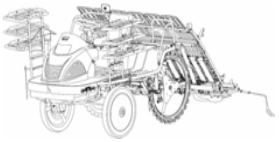

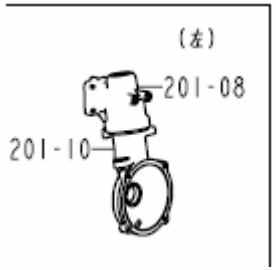

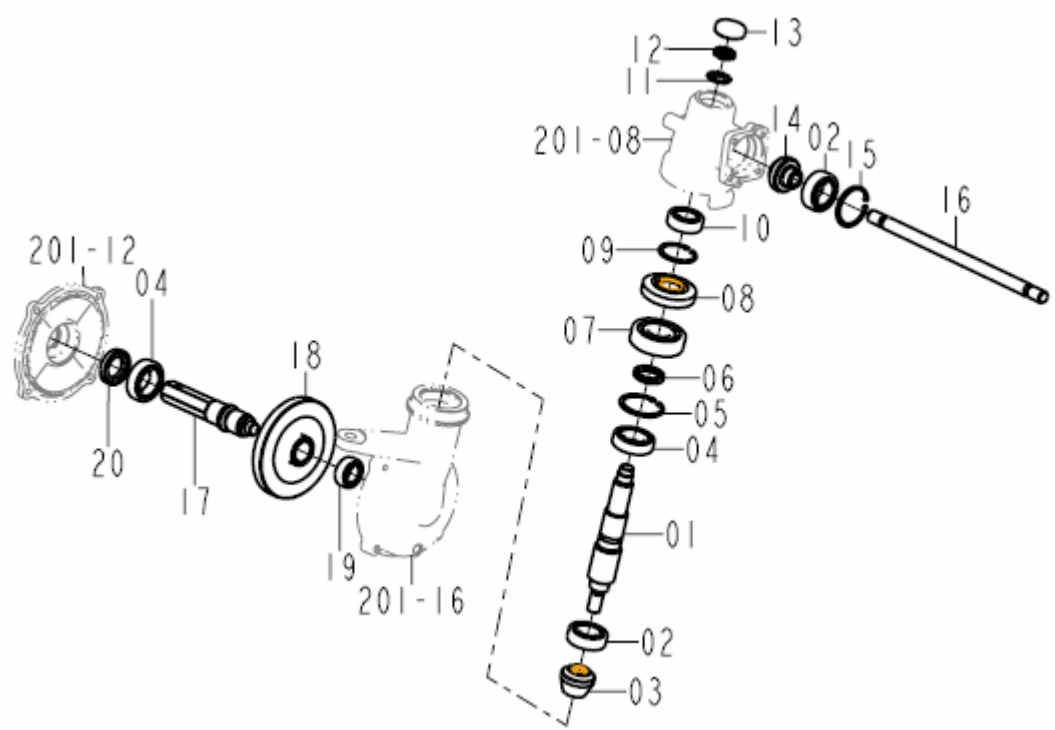

NOTE

PDF Complete
Your complimentary use period has ended. Thank you for using PDF Complete.
Click Here to upgrade to Unlimited Pages and Expanded Features

311	최종케이스기어	PD60	Year / Month 2009 / 02

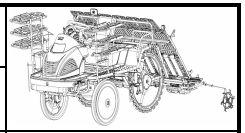

FIG.	NO.	부품번호	품명	PART NAME	수량	규격	비고	메모
311	01	20083110021	킹핀축	SHAFT , KING PIN	2			
311	02	V6001106205	볼베어링	BEARING , BALL	4	6205		
311	03	20083110040	베벨기어(10)	GEAR , BEVEL/10	2			
311	04	V6001106006	볼베어링	BEARING , BALL	4	6006		
311	05	V7051400550	C형멈춤링(구멍용)	C-RING , HOLE	2	55		
311	06	20083110050	슬리브(30X40X6)	SLEEVE , 30X40X6	2			
311	07	V6001106306	볼베어링	BEARING , BALL	2	6306		
311	08	20083110030	베벨기어(20)	GEAR , BEVEL/20	2			
311	09	V7051400470	C형멈춤링(구멍용)	C-RING , HOLE	2	47		
311	10	V6001106204	볼베어링	BEARING , BALL	2	6204		
311	11	V6711000030	베어링용 와셔	WASHER, BEARING	2	AW03		
311	12	V6701000030	베어링용 너트	NUT, BEARING	2	AN03		
311	13	20083100061	막이판(40X8)	SEAL , PLUG(40X8)	2			
311	14	20083100030	베벨기어(11)	GEAR , BEVEL/11	2			
311	15	V7051400520	C형멈춤링(구멍용)	C-RING , HOLE	4	55		
311	16	20083100040	전륜구동축(우)	SHAFT , RH/FR/DRIVING	1			
311	17	20083120020B	전륜축	SHAFT , FR/WHEEL	2			
311	18	20083120030A	베벨기어(39)	GEAR , BEVEL/39	2			
311	19	V6001106203	볼베어링	BEARING , BALL	2	6203		
311	20	V7441304708	오일실(D)	SEAL , OIL/D	2	304708		

NOTE	

320	뒷차축	PD60	Year / Month 2009 / 02	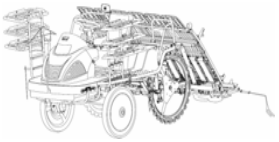

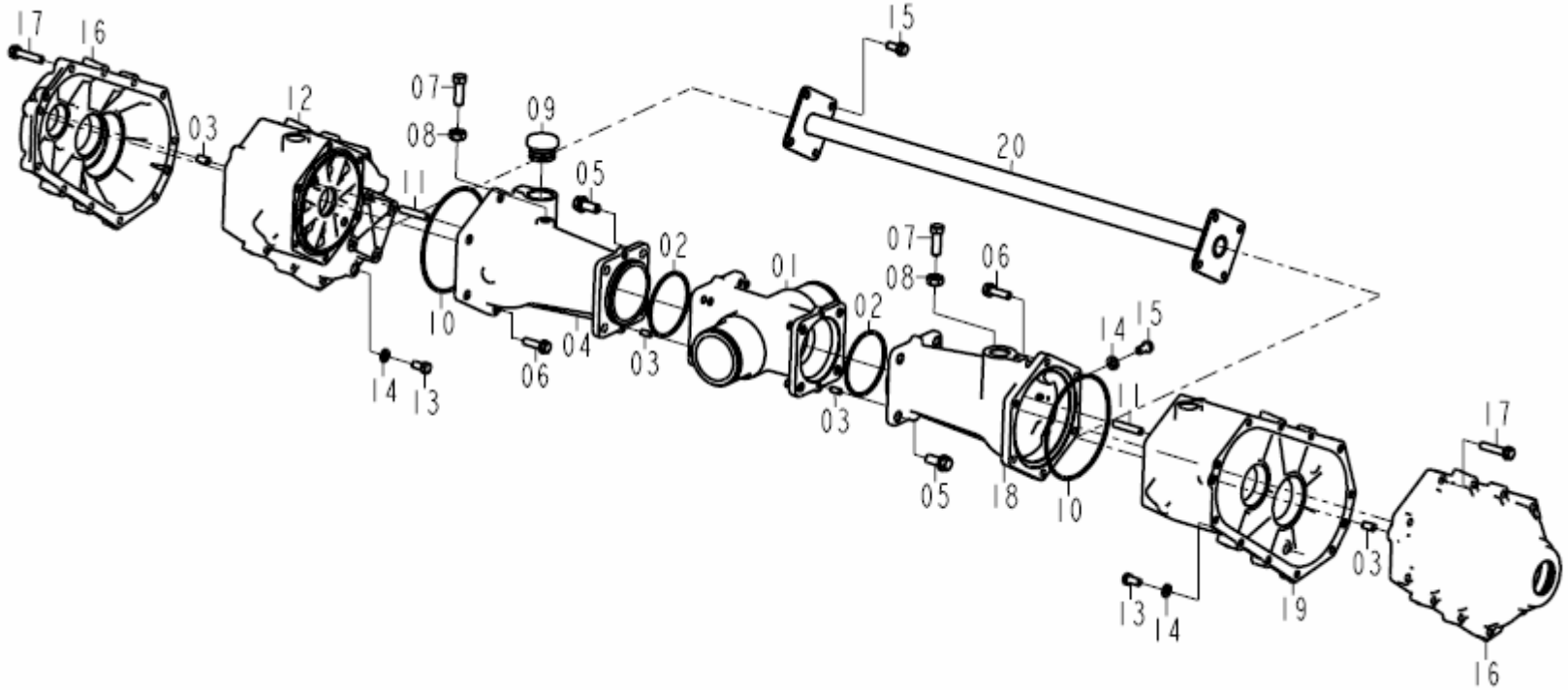

NOTE	

PDF Complete
Your complimentary use period has ended. Thank you for using PDF Complete.
Click Here to upgrade to Unlimited Pages and Expanded Features

320	뒷차축	PD60	Year / Month 2009 / 02

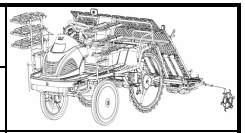

FIG.	NO.	부품번호	품명	PART NAME	수량	규격	비고	메모
320	01	20083200012A	리어액슬케이스(중)	CASE , RR/AXLE	1			
320	02	V7211031075	O링(G)	O-RING , G	2	G75		
320	03	V5201008014	평행핀(A)	PIN , PARALLEL/A	8	8X14		
320	04	20083200081	익스텐션(우)	EXTENSION(RH)	1			
320	05	V2173610025	소형육각볼트보통(S)	BOLT , HEX/S	8	M10x25(S)		
320	06	V2173608030	소형육각볼트보통(S)	BOLT , HEX/S	12	M8x30(S)		
320	07	V2013610030	소형육각볼트(보통)	BOLT , HEX	2	M10x30		
320	08	V3042600100	소형육각너트보통2종	NUT , HEX/2	2	M10		
320	09	79542051010C	오일캡(30)	CAP , OIL/30	1			
320	10	V7211031125	O링(G)	O-RING , G	2	G125		
320	11	V5211008040	평행핀(B)	PIN , PARALLEL/B	4	8X40		
320	12	20083230020C	사이드케이스(우/내)	CASE , RH/IN/SIDE	1			
320	13	79552010260A	드레인플러그(1/4)	PLUG , DRAIN/PT1/4	2			
320	14	32073010160	퇴유플러그팩킹	PACKING , OIL OUT PLUG	3			
320	15	V2013608016	소형육각볼트(보통)	BOLT , HEX	9	M8x16		
320	16	20083230030A	사이드케이스(외)	CASE , OUT/SIDE	2			
320	17	V2173608040	소형육각볼트보통(S)	BOLT , HEX/S	22	M8x40(S)		
320	18	20083200071	익스텐션(좌)	EXTENSION(LH)	1			
320	19	20083230010C	사이드케이스(좌/내)	CASE , LH/IN/SIDE	1	8X14		
320	20	20083233200B	보강파이프 COMP	SUPPORT COMP, PIPE	1			

NOTE	

321	리어입력축	PD60	Year / Month 2009 / 02	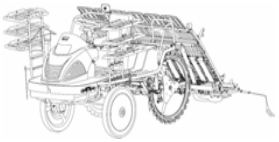

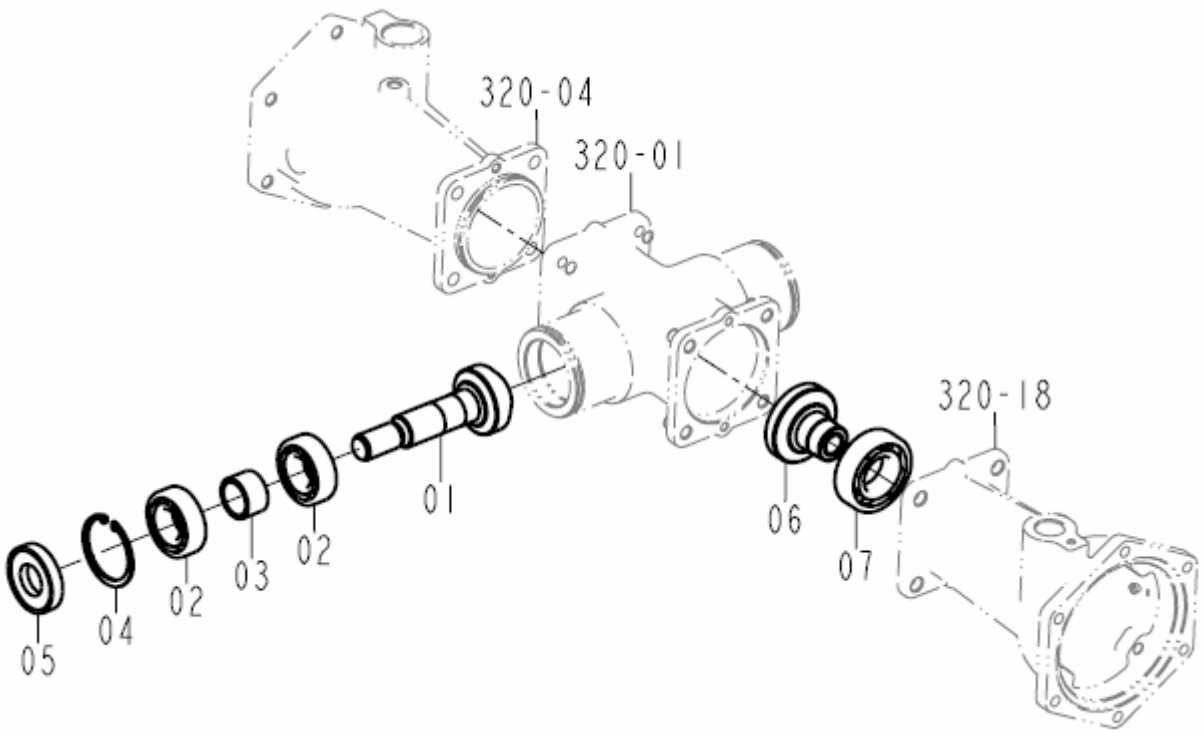

NOTE	

PDF Complete
Your complimentary use period has ended. Thank you for using PDF Complete.
Click Here to upgrade to Unlimited Pages and Expanded Features

321	리어입력축	PD60	Year / Month 2009 / 02

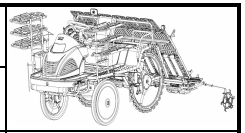

FIG.	NO.	부품번호	품명	PART NAME	수량	규격	비고	메모
321	01	20083210010	리어입력축	SHAFT , IN/REAR	1			
321	02	V6001106205	볼베어링	BEARING , BALL	2	6205		
321	03	20082060020	간격통(26X32X20)	SPACER , 26X32X20	1			
321	04	V7051400520	C형멈춤링(구멍용)	C-RING , HOLE	1	52		
321	05	V7441255210	오일실(D)	SEAL , OIL/D	1	255210		
321	06	20083240010	베벨기어(19)	GEAR , BEVEL/19	1			
321	07	V6001106206	볼베어링	BEARING , BALL	1	6206		

NOTE	

322	롤링서포트	PD60	Year / Month 2009 / 02	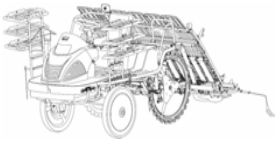

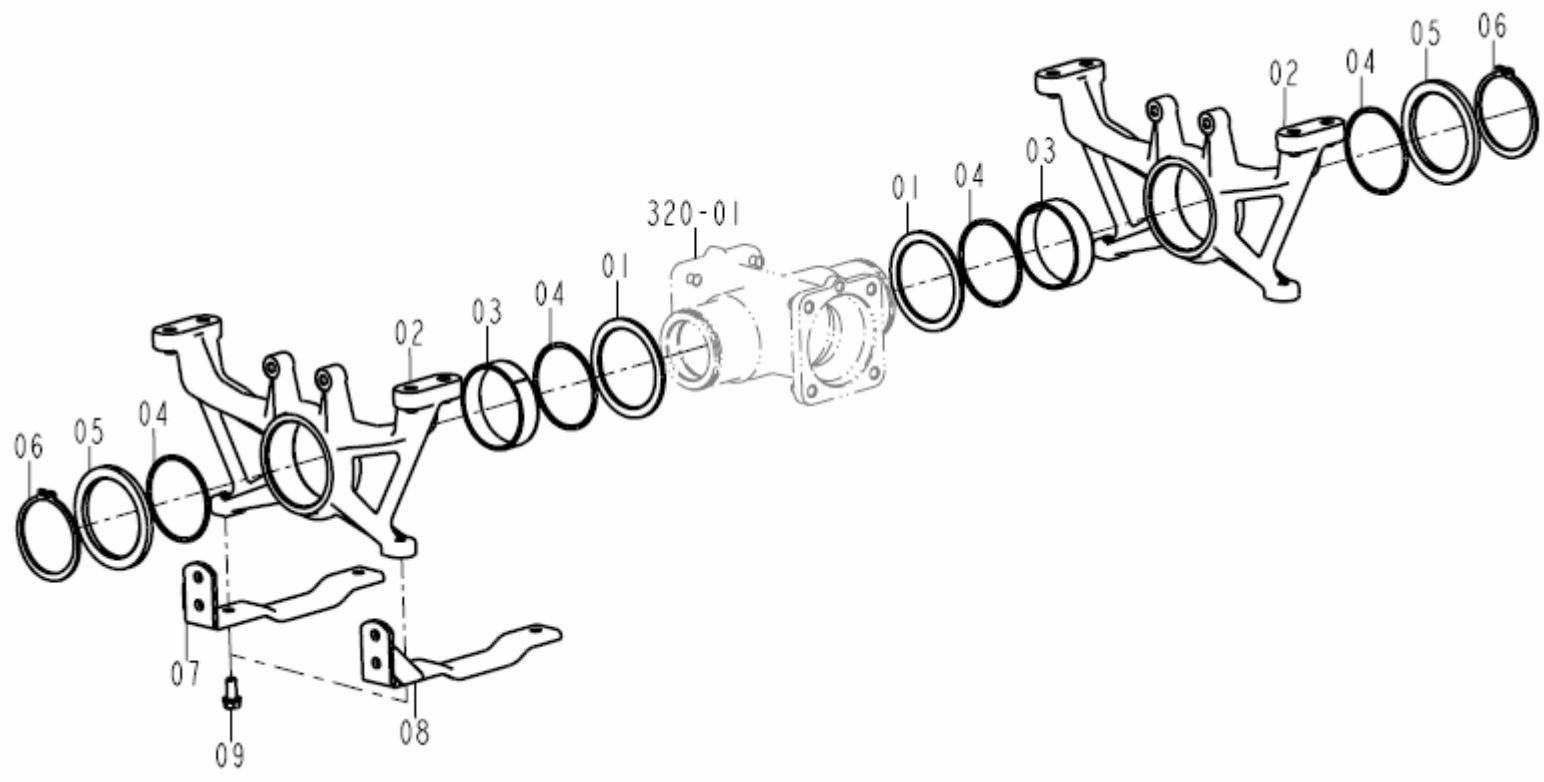

NOTE	

PDF Complete
Your complimentary use period has ended. Thank you for using PDF Complete.
Click Here to upgrade to Unlimited Pages and Expanded Features

322	롤링서포트	PD60	Year / Month 2009 / 02

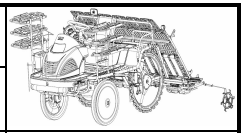

FIG.	NO.	부품번호	품명	PART NAME	수량	규격	비고	메모
322	01	20083220030	라이너(70X90X3)	LINER , 70X90X3	2			
322	02	20083200022	롤링서포트	SUPPORT , ROLLING	2			
322	03	20083200060A	부시(70X75X20)	BUSH , 70X75X20	2			
322	04	V7201057070	O링(P)	O-RING	4			
322	05	20083200050	와셔	WASHER	2			
322	06	V7041400700	C형멈춤링(축용)	C-RING , SHAFT	2	70		
322	07	20083222300B	지지브라킷(우) COMP	BRACKET COMP , RH/SUPPORT	1			
322	08	20083222100B	지지브라킷(좌) COMP	BRACKET COMP , LH/SUPPORT	1			
322	09	V2173608016	소형육각볼트보통(S)	BOLT , HEX/S	4	M8x16(S)		

NOTE	

324	조향클러치축(우)	PD60	Year / Month 2009 / 02	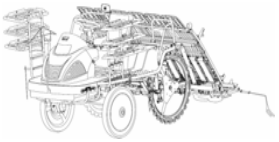

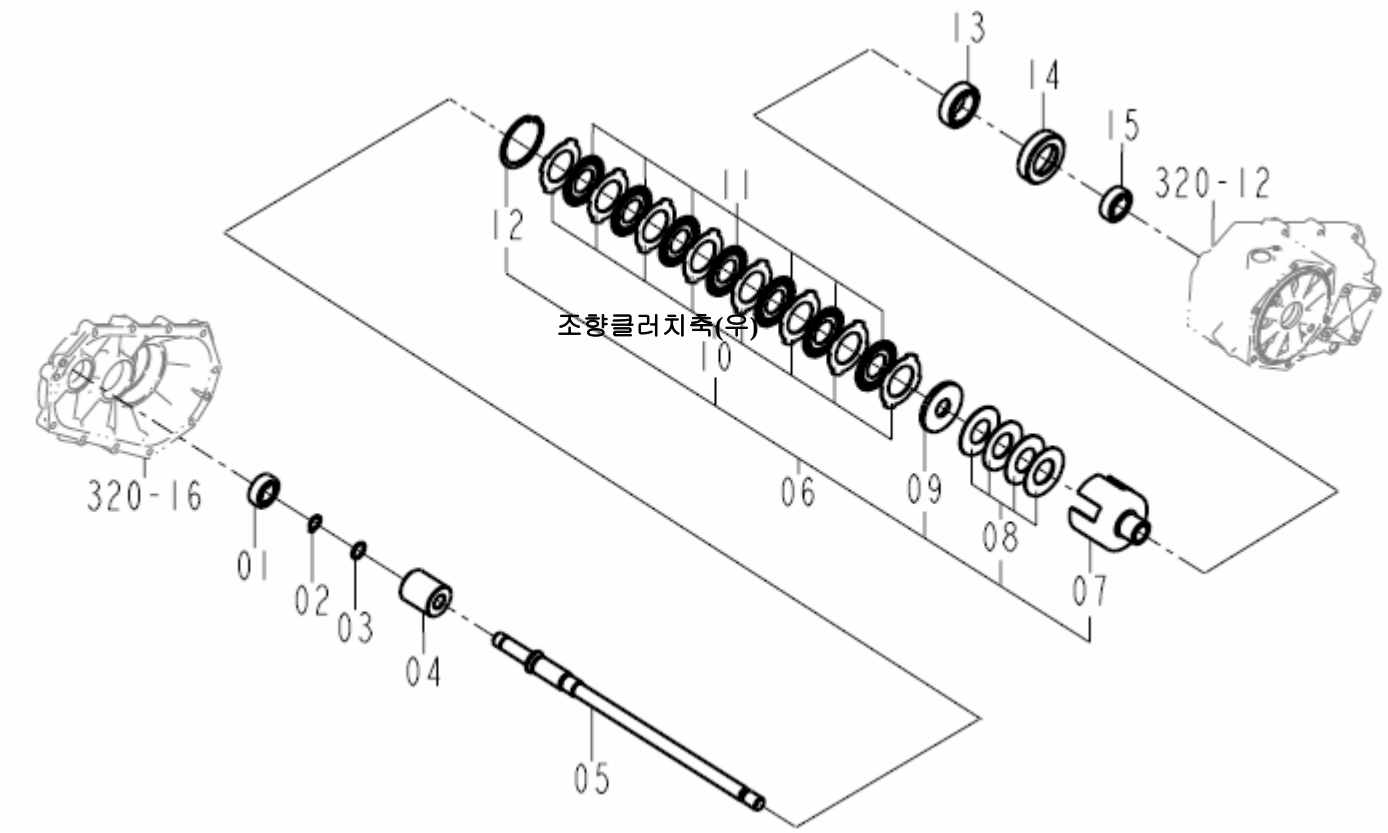

NOTE	

PDF Complete
Your complimentary use period has ended. Thank you for using PDF Complete.
Click Here to upgrade to Unlimited Pages and Expanded Features

324	조향클러치축 (우)	PD60	Year / Month 2009 / 02

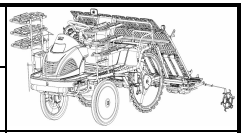

FIG.	NO.	부품번호	품명	PART NAME	수량	규격	비고	메모
324	01	V6001106203	볼베어링	BEARING , BALL	1	6203		
324	02	V7041400170	C형멈춤링(축용)	C-RING , SHAFT	1	17		
324	03	20083240070	와셔(17X22X1)	WASHER , 17X22X1	1			
324	04	20083240030	기어(11)	GEAR , 11	1			
324	05	20083240040A	사이드클러치축(우)	SHAFT , RH/SIDE CLUTCH	1			
324	06	20083242200	사이드클러치 ASSY	CLUTCH ASSY , SIDE	1			
324	07	20083242210	사이드클러치케이스	CASE , CLUTCH/SIDE	1			
324	08	20082022120	접시스프링	SPRING , CONE	4			
324	09	20083242220	스프링받침(사이드)	PLATE , 6.0/SIDE	1			
324	10	20083242230	연결암 COMP	ARM COMP , LINKAGE/FIX	8			
324	11	20083242240	디스크플레이드(사이드)	PLATE , DISC/SIDE	7			
324	12	V7041400650	C형멈춤링(축용)	C-RING , SHAFT	1	65		
324	13	V6001106006	볼베어링	BEARING , BALL	1	6006		
324	14	20083240060A	사이드클러치허브	HUB , CLUTCH/SIDE	1			
324	15	V6001106004	볼베어링	BEARING , BALL	1	6004		

NOTE	

325	후차축기어	PD60	Year / Month 2009 / 02	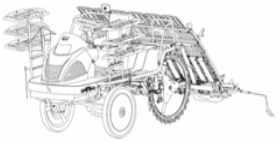

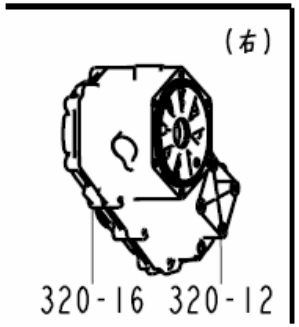

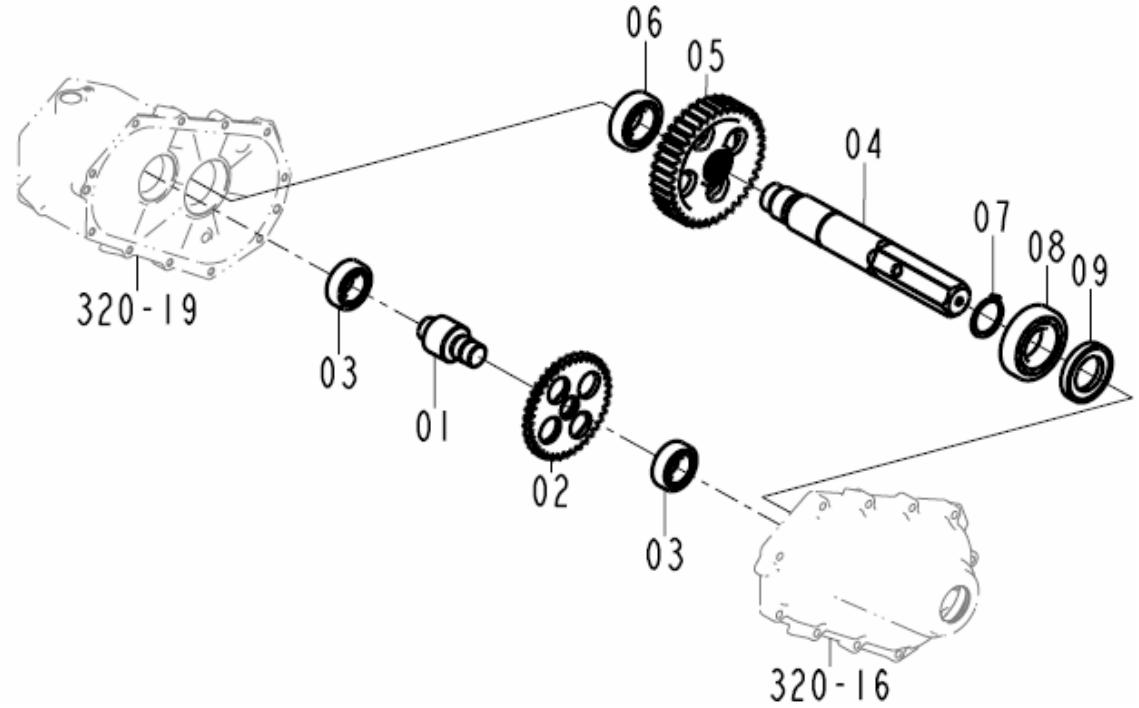

NOTE	

PDF Complete
Your complimentary use period has ended. Thank you for using PDF Complete.
Click Here to upgrade to Unlimited Pages and Expanded Features

325	후차축기어	PD60	Year / Month 2009 / 02

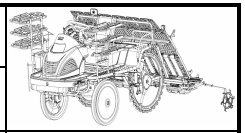

FIG.	NO.	부품번호	품명	PART NAME	수량	규격	비고	메모
325	01	20083250010	리어카운터축	SHAFT , COUNTER/REAR	2			
325	02	20083250020A	카운터기어(38)	GEAR , COUNTER/38	2			
325	03	V6001106205	볼베어링	BEARING , BALL	4	6205		
325	04	20083260010B	후륜축	SHAFT , RR/WHEEL	2			
325	05	20083260020B	휠기어(38)	GEAR , WHEEL/38	2			
325	06	V6001106206	볼베어링	BEARING , BALL	2	6206		
325	07	V7041400400	C형멈춤링(축용)	C-RING , SHAFT	2	40		
325	08	V6001106208	볼베어링	BEARING , BALL	2	6208		
325	09	V7441406510	오일실(D)	SEAL , OIL/D	2			

NOTE	

327	조향클러치축(좌)	PD60	Year / Month 2009 / 02	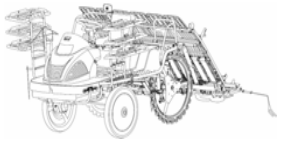

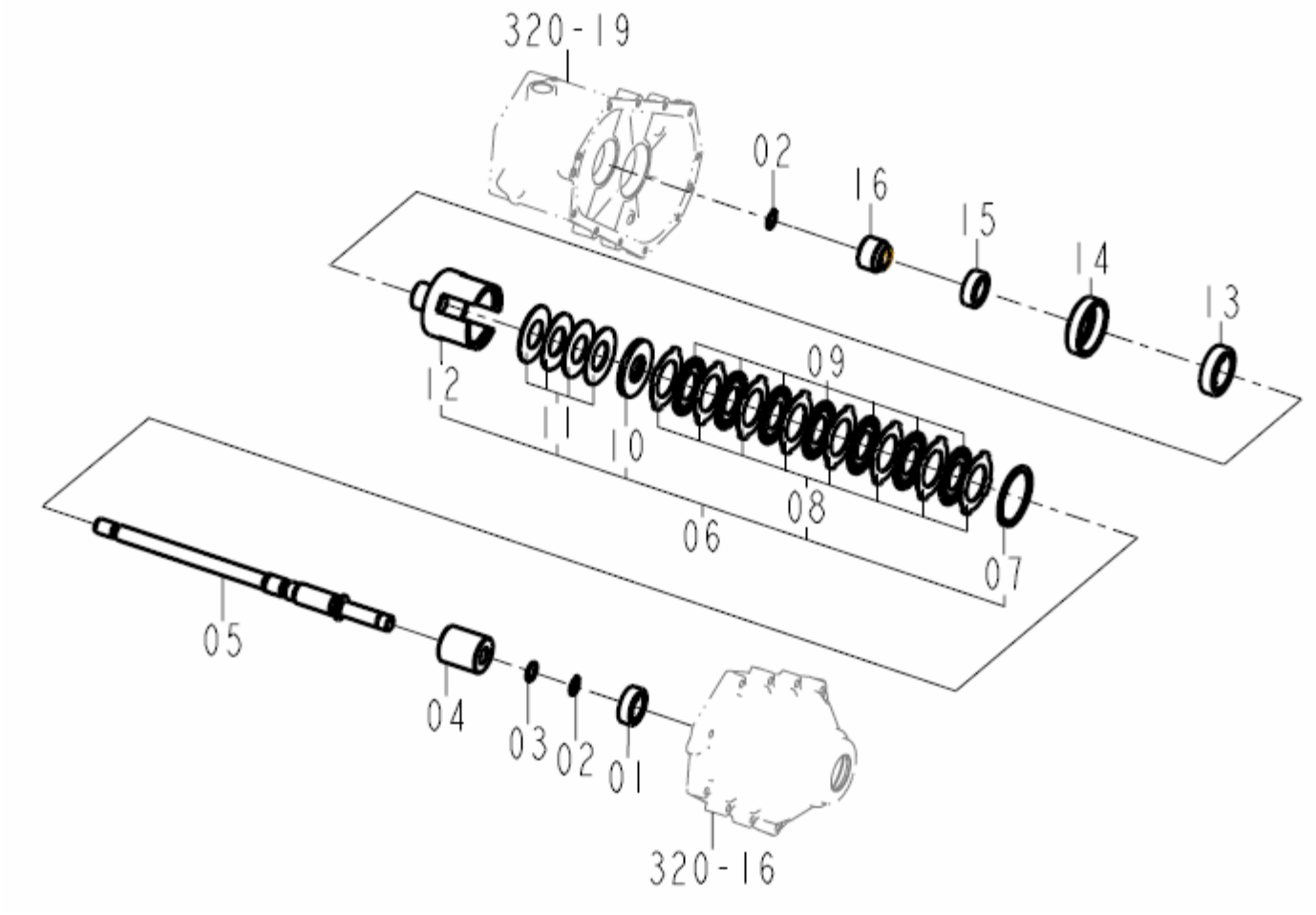

NOTE	

PDF Complete
Your complimentary use period has ended. Thank you for using PDF Complete.
Click Here to upgrade to Unlimited Pages and Expanded Features

327	조향클러치축(좌)	PD60	Year / Month 2009 / 02

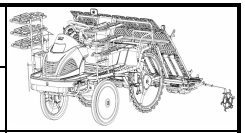

FIG.	NO.	부품번호	품명	PART NAME	수량	규격	비고	메모
327	01	V6001106203	볼베어링	BEARING , BALL	1	6203		
327	02	V7041400170	C형멈춤링(축용)	C-RING , SHAFT	2	17		
327	03	20083240070	와셔(17X22X1)	WASHER , 17X22X1	1			
327	04	20083240030	기어(11)	GEAR , 11	1			
327	05	20083240020A	사이드클러치축(좌)	SHAFT , LH/SIDE CLUTCH	1			
327	06	20083242200	사이드클러치 ASSY	CLUTCH ASSY , SIDE	1			
327	07	V7041400650	C형멈춤링(축용)	C-RING , SHAFT	1	65		
327	08	20082022140	분리판(클러치)	PLATE , SEPARATE/CLUTCH	8			
327	09	20083242240	디스크플레이드(사이드)	PLATE , DISC/SIDE	7			
327	10	20083242220	스프링받침(사이드)	PLATE , 6.0/SIDE	1			
327	11	20082022120	접시스프링	SPRING , CONE	4			
327	12	20083242210	사이드클러치케이스	CASE , CLUTCH/SIDE	1			
327	13	V6001106006	볼베어링	BEARING , BALL	1	6006		
327	14	20083240060A	사이드클러치허브	HUB , CLUTCH/SIDE	1			
327	15	V6001106004	볼베어링	BEARING , BALL	1	6004		
327	16	20083310010	브레이크허브	HUB , BRAKE	1			

NOTE	

328	중간연결축	PD60	Year / Month 2009 / 02	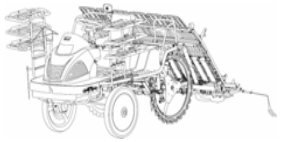

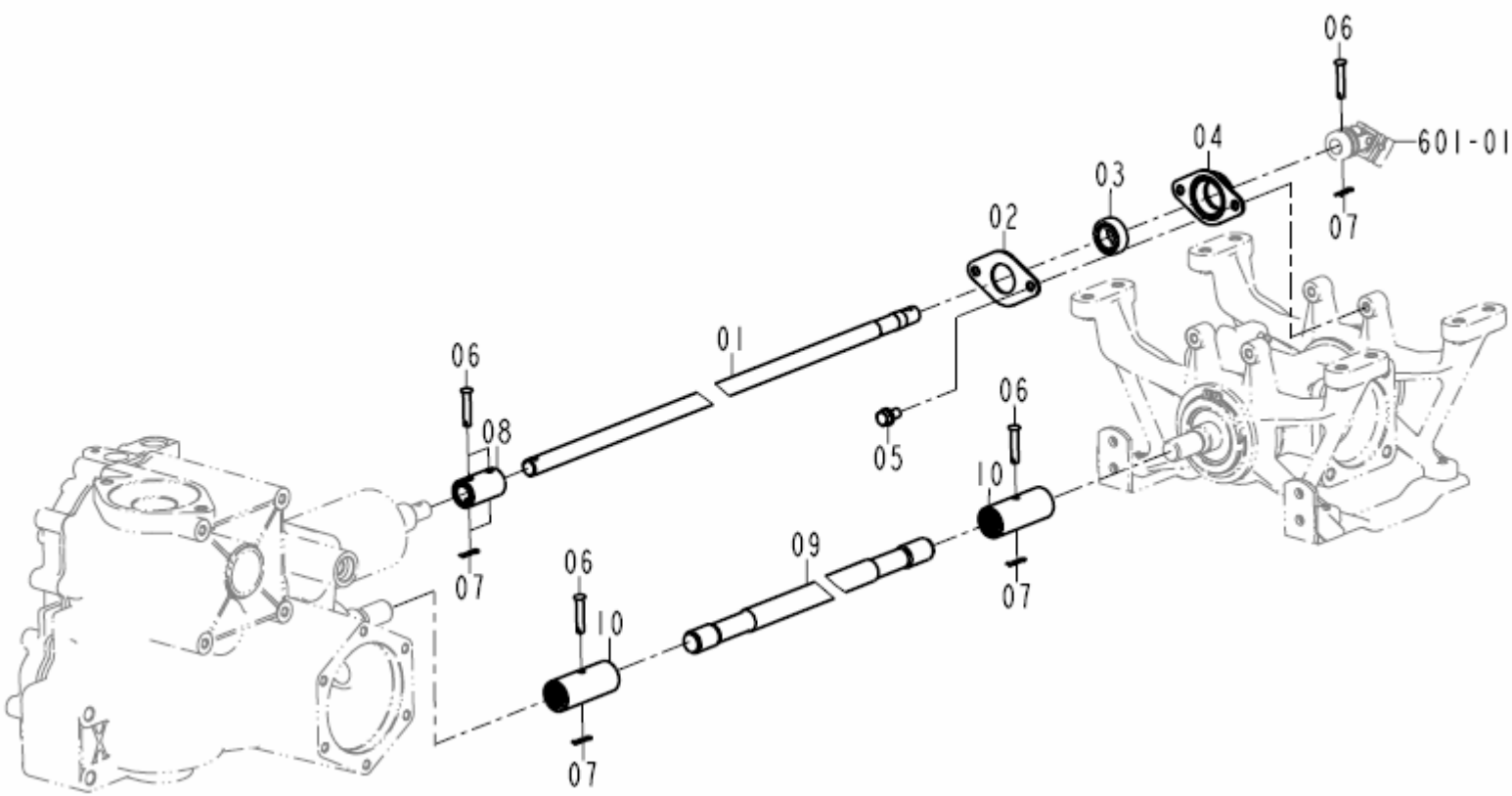

NOTE	

PDF Complete
Your complimentary use period has ended. Thank you for using PDF Complete.
Click Here to upgrade to Unlimited Pages and Expanded Features

328	중간연결축	PD60	Year / Month 2009 / 02

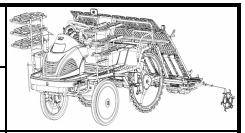

FIG.	NO.	부품번호	품명	PART NAME	수량	규격	비고	메모
328	01	20086010011A	연결축	SHAFT , CONNECTING	1			
328	02	20086010050	베어링플레이트	PLATE , BEARING	1			
328	03	V6001506002	볼베어링	BEARING , BALL	1	6002DD		
328	04	20086012400B	베어링하우징 COMP	HOUSING COMP , BEARING	1			
328	05	V2173608016	소형육각볼트보통(S)	BOLT , HEX/S	2	M8x16(S)		
328	06	21444190201B	감지가이드	PIN	5			
328	07	21306010180	헤어핀(6)	PIN , SNAP(6)	5			
328	08	20086010020C	식부커플링	COUPLING , PLANTING	1			
328	09	20083210021A	리어구동축	SHAFT , DRIVING/REAR	1			
328	10	20083210030A	커플링(20X28X70)	COUPLING , 20X28X70	2			

NOTE	

331	브레이크	PD60	Year / Month 2009 / 02	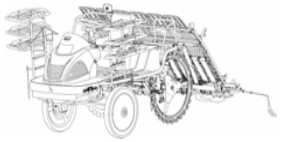

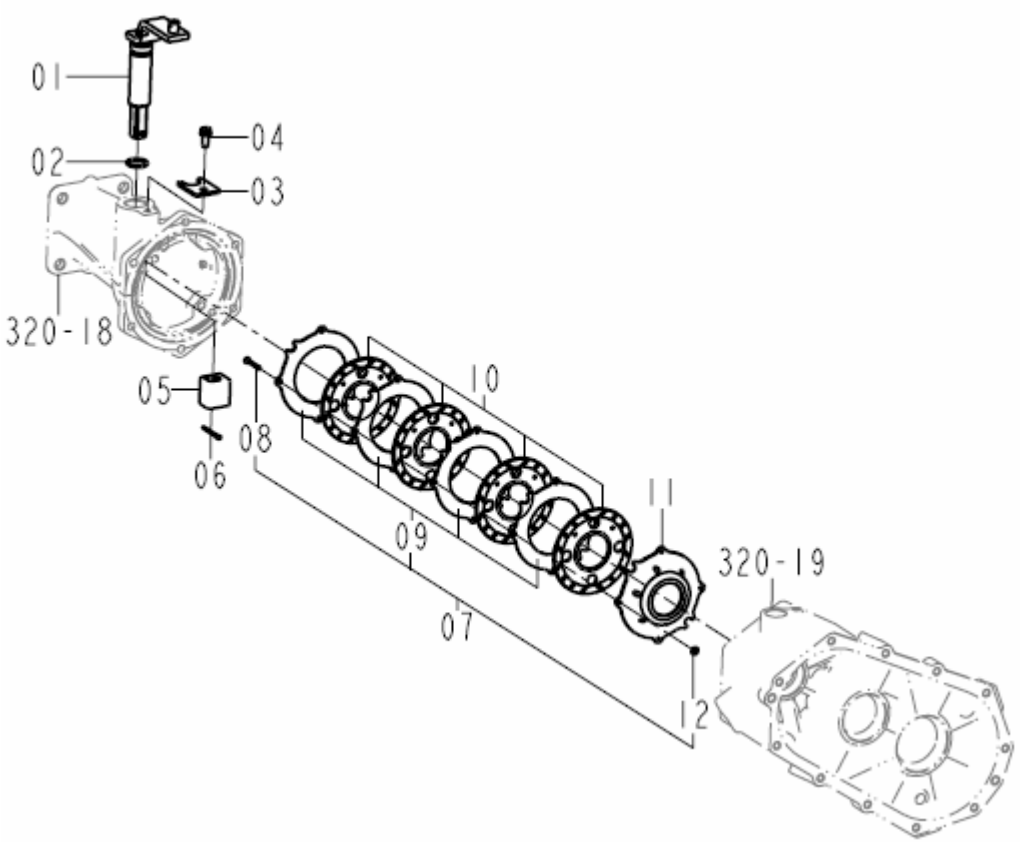

NOTE	

PDF Complete
Your complimentary use period has ended. Thank you for using PDF Complete.
Click Here to upgrade to Unlimited Pages and Expanded Features

331	브레이크	PD60	Year / Month 2009 / 02

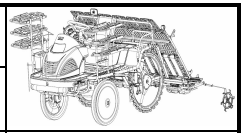

FIG.	NO.	부품번호	품명	PART NAME	수량	규격	비고	메모
331	01	20083322100C	브레이크암축 COMP	SHAFT COMP , ARM/BRAKE	1			
331	02	V7201024018	O링(P)	O-RING , P	1	P18		
331	03	20082140040B	고정플레이트	PLATE , LOCK	1			
331	04	V2103606016	육각볼트(S)	BOLT , HEX /S	1	M6x16(S)		
331	05	20083320020A	브레이크캠	CAM , BRAKE	1			
331	06	V5001930025	분할핀	PIN , SPLIT	1	3.0X25		
331	07	20083312000	브레이크 ASSY	BRAKE ASSY	1			
331	08	20083312040	리벳(03X25)	RIVET , 03X25	4			
331	09	20083312030	분리판(브레이크)	PLATE , SEPARATE/BRAKE	4			
331	10	20083312020	마찰판	PLATE , FRICTION	4			
331	11	20083312010	압력판	PLATE , PRESSURE	1			
331	12	21453352450	멈춤링	RING , STOP	4			

NOTE	

333	브레이크로드	PD60	Year / Month 2009 / 02	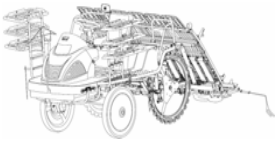

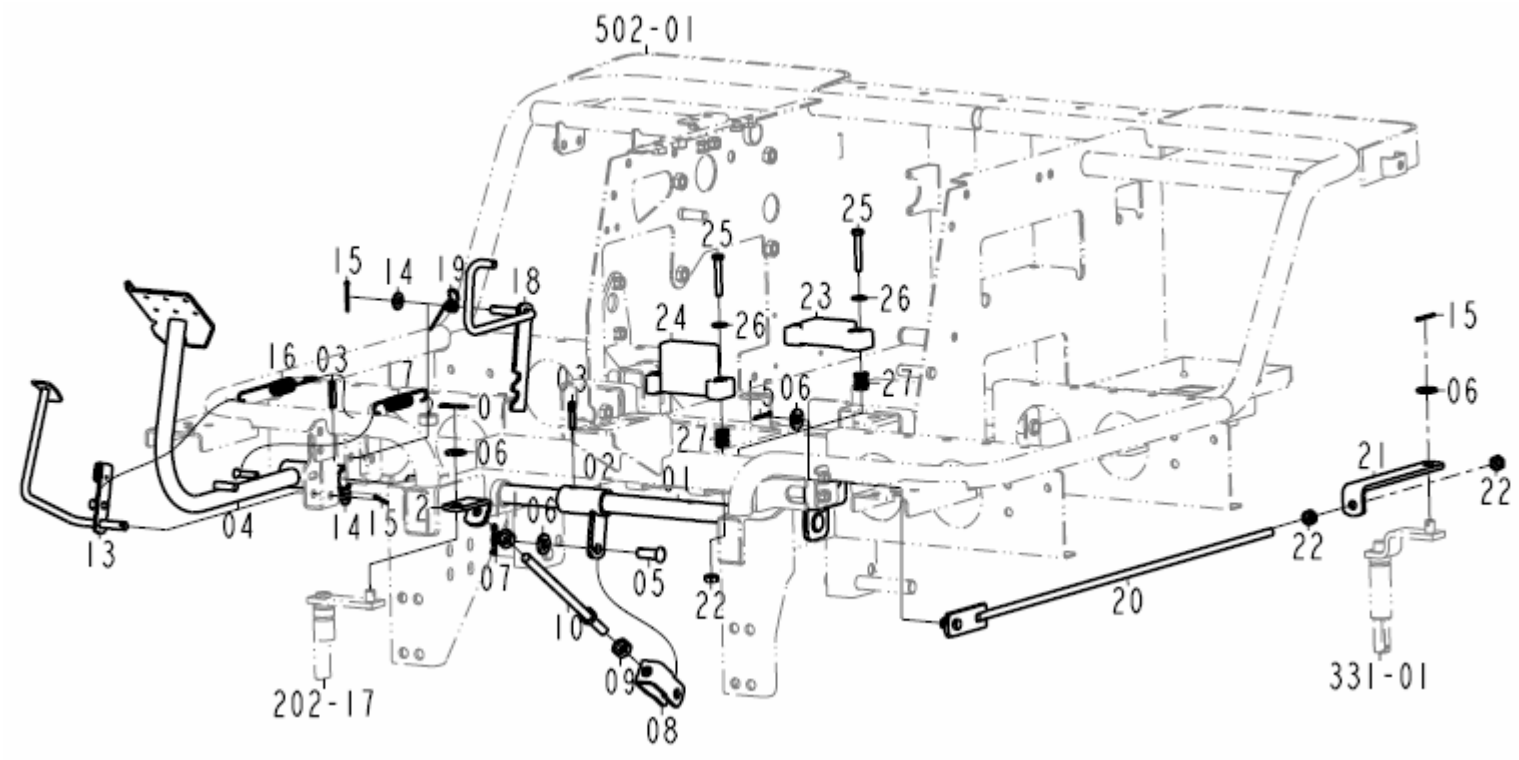

NOTE

PDF Complete
Your complimentary use period has ended. Thank you for using PDF Complete.
Click Here to upgrade to Unlimited Pages and Expanded Features

333	브레이크로드	PD60	Year / Month 2009 / 02

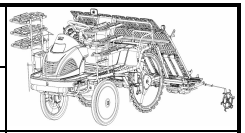

FIG.	NO.	부품번호	품명	PART NAME	수량	규격	비고	메모
333	01	20083332600B	브레이크축 COMP	SHAFT COMP , BRAKE	1			
333	02	20082412300A	주클러치암 COMP	ARM COMP , CLUTCH/MAIN	1			
333	03	V5801406028	스프링핀	PIN , SPRING	2	6X28		
333	04	20083332201	브레이크페달 COMP	PEDAL COMP , BRAKE	1			
333	05	20082410010	핀(10X22)	PIN , 10X22	1			
333	06	V4111600100	평와셔	WASHER , PLAIN	4	M10		
333	07	20082100040	헤어핀(D=10)	PIN , SNAP/10	2			
333	08	20082412200A	연결플레이트 COMP	PLATE COMP , CONNECT	1			
333	09	V3042600100	소형육각너트보통2종	NUT , HEX/2	1	M10		
333	10	20082412600	주클러치로드 COMP	ROD COMP , CLUTCH/MAIN	1			
333	11	20084060110	소형육각너트보통((좌,M10)	NUT , LH/HEX/M10	1	M10(L)		
333	12	20082412101	연결판 COMP	PLATE COMP , CLUTCH/MAIN	1			
333	13	20081172600	스로틀페달 COMP	PEDAL COMP , THROTTLE	1			
333	14	V4111600080	평와셔	WASHER , PLAIN	2	M8		
333	15	V5001925025	분할핀	PIN , SPLIT	4	2.5X25		
333	16	20081170050	스프링(HE122)	SPRING , HE122	1			
333	17	20083330051	스프링(HE100)	SPRING , HE100	1			
333	18	20083332400D	브레이크페달홀더 COMP	HOLDER COMP , PEDAL	1			
333	19	20083330010	스프링	SPRING	1			
333	20	20083342201	브레이크로드	ROD , BRAKE	1			
333	21	20083340020	브레이크플레이트	PLATE , BRAKE	1			
333	22	V3042600080	소형육각너트보통2종	NUT , HEX/2	6	M8		
333	23	20085384100	수평센서(9도) ASSY	SENSOR ASSY , LEVEL/ROLLING	1			
333	24	20085383100	각속도센서 ASSY	SENSOR ASSY	1			
333	25	V2053606040	육각볼트	BOLT . HEX	4	M6x40		
333	26	35605033020	와이어인출용와셔	WASHER , WIRE WITHDRAWAL	4			
333	27	34522860060	스프링(경사센서조절)	SPRING , SENSOR	4			

NOTE	

351	전륜	PD60	Year / Month 2009 / 02	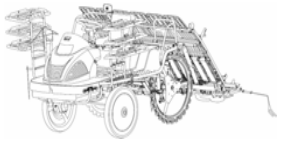

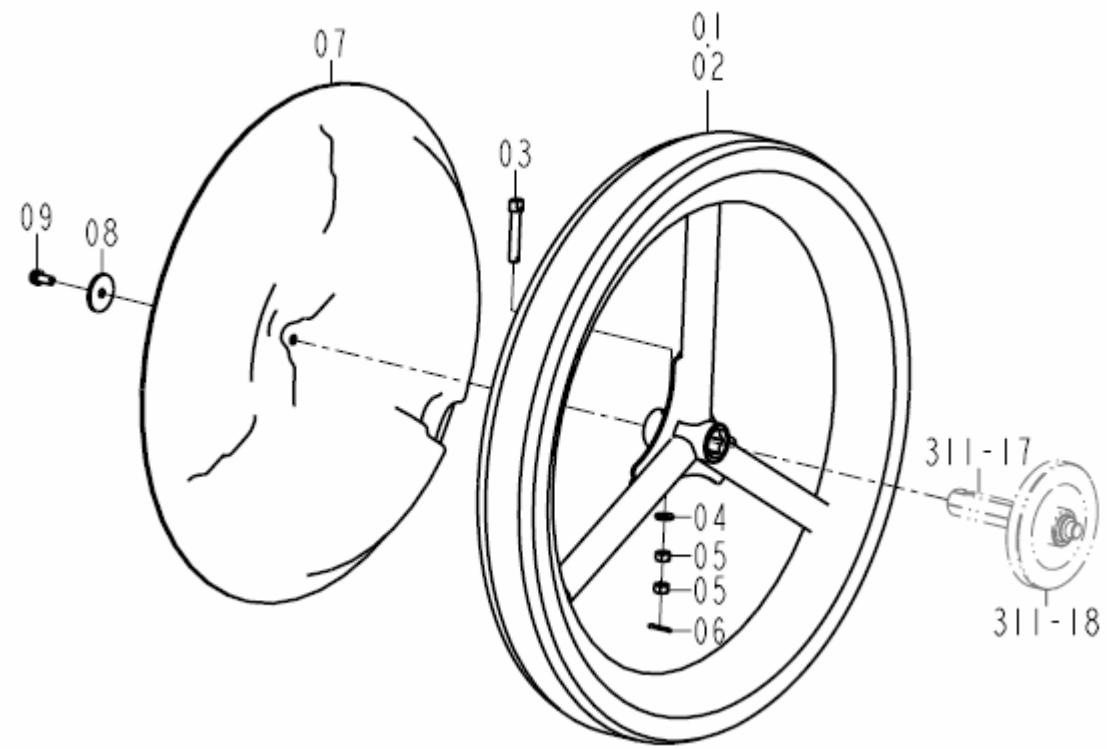

NOTE	

PDF Complete
Your complimentary use period has ended. Thank you for using PDF Complete.
Click Here to upgrade to Unlimited Pages and Expanded Features

351	전륜	PD60	Year / Month 2009 / 02

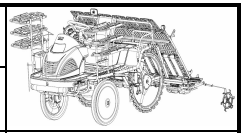

FIG.	NO.	부품번호	품명	PART NAME	수량	규격	비고	메모
351	01	20083512101	전차륜(좌)	WHEEL COMP , LH/FR	1			
351	02	20083512201	전차륜(우)	WHEEL COMP , RH/FR	1			
351	03	20083510020	전륜고정핀	PIN,HUB/FR	2			
351	04	V4011600100	스프링와셔	WASHER,SPRING	2	M10		
351	05	V3042600100	소형육각너트보통2종	NUT , HEX/2	4	M10		
351	06	V5001930020	분할핀	PIN,SPLIT	2	3x20		
351	07	20083510010A	휠커버	CAP , WHEEL	2			
351	08	14886070030	와셔(9X40X3)	WASHER , 9X40X3	2			
351	09	V2173608020	소형육각볼트보통(S)	BOLT , HEX/S	2	M8x20(S)		

NOTE	

352	후륜	PD60	Year / Month 2009 / 02	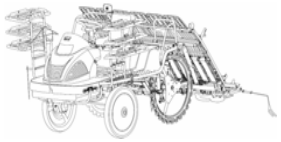

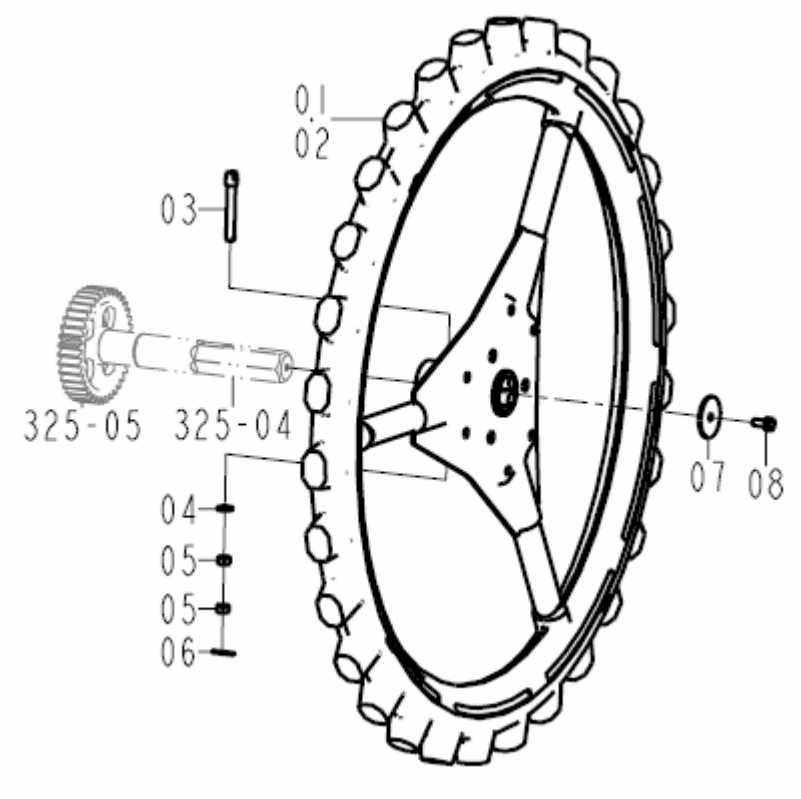

NOTE	

PDF Complete
Your complimentary use period has ended. Thank you for using PDF Complete.
Click Here to upgrade to Unlimited Pages and Expanded Features

352	후륜	PD60	Year / Month 2009/ 02

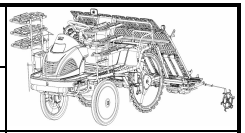

FIG.	NO.	부품번호	품명	PART NAME	수량	규격	비고	메모
352	01	20083522101	후차륜(좌)	WHEEL COMP , LH/RR	1			
352	02	20083522201	후차륜(우)	WHEEL COMP , RH/RR	1			
352	03	20083520020	후륜고정핀	PIN,HUB/RR	2			
352	04	V4011600100	스프링와셔	WASHER,SPRING	2	M10		
352	05	V3042600100	소형육각너트보통2종	NUT , HEX/2	4	M10		
352	06	V5001930020	분할핀	PIN,SPLIT	2	3x20		
352	07	20083520010	와셔(9X50X3)	WASHER , 9X50X3	2			
352	08	V2173608020	소형육각볼트보통(S)	BOLT , HEX/S	2	M8x20(S)		

NOTE	

402	배관	PD60	Year / Month 2009 / 02	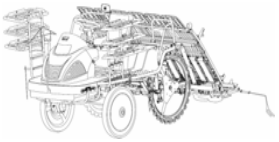

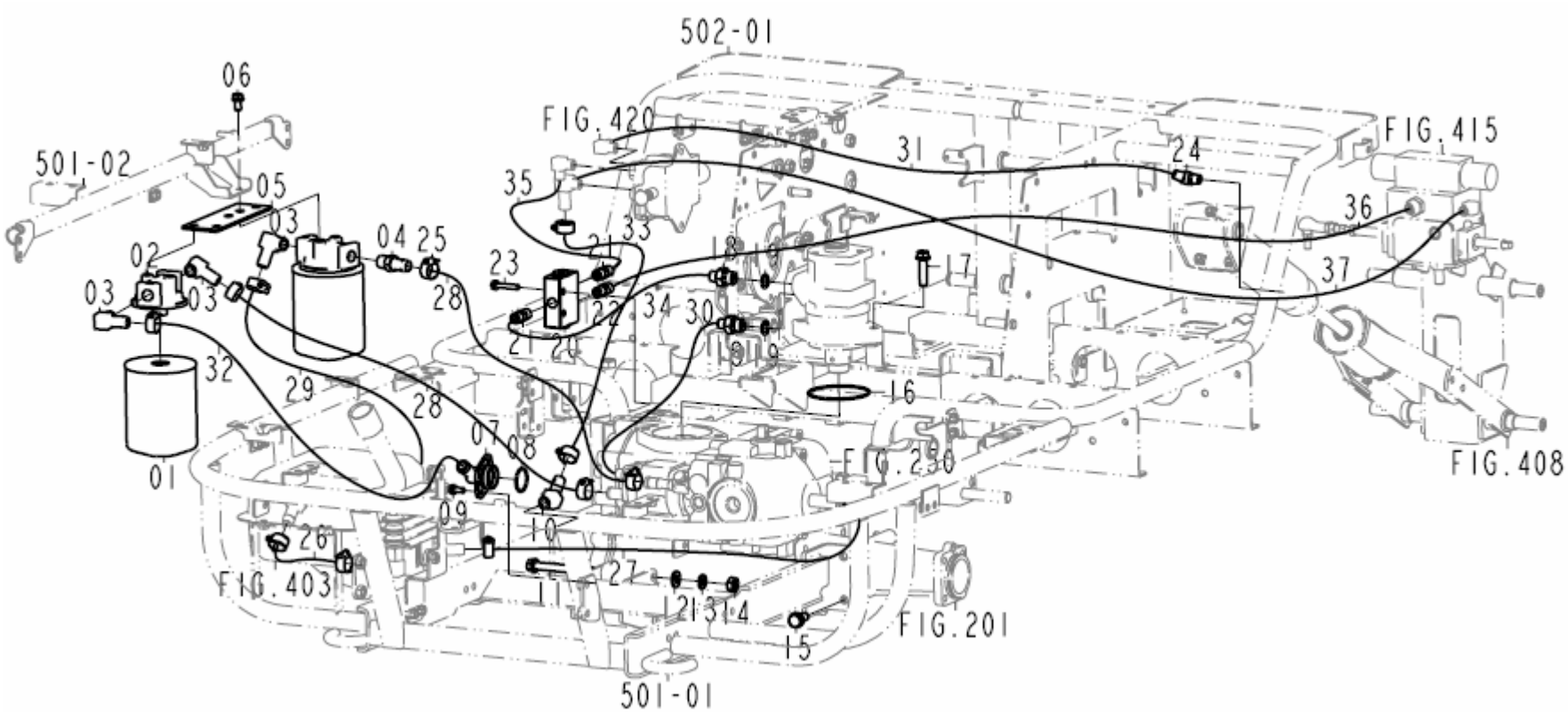

NOTE

PDF Complete
Your complimentary use period has ended. Thank you for using PDF Complete.
Click Here to upgrade to Unlimited Pages and Expanded Features

402	배관	PD60	Year / Month 2009 / 02

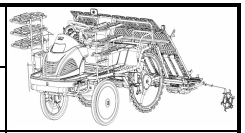

FIG.	NO.	부품번호	품명	PART NAME	수량	규격	비고	메모
402	01	35523542500	카트리지ASSY(청색)	CARTRIDGE , HYD(HU)	2			
402	02	36753542412	커버(휠터)	COVER , COVER(FILTER)	2			
402	03	36263700050	플러그(직각/저압)	PLUG , REACTANGLE/LOW	3			
402	04	20084020010	플러그(직선/저압)	PLUG , STRAIT/LOW	1			
402	05	20084022600	필터브라킷 COMP	PLATE COMP , FILTER	1			
402	06	V2173608016	소형육각볼트보통(S)	BOLT , HEX/S	5	M8x16(S)		
402	07	20084022130	필터커버	PLUG,STRAIT	1			
402	08	V7231020029	O링(P)	O-RING , P	1	S29		
402	09	V2113606016	소형육각볼트보통(S)	BOLT , HEX/S	2	M6x16(S)		
402	10	34523700050	플러그(45도/저압)	PLUG , 45/LOW	1			
402	11	V2173610100	소형육각볼트보통(S)	BOLT , HEX/S	2	M10x100(S)		
402	12	V4111600100	평와셔	WASHER , PLAIN	2	M10		
402	13	V4011600100	스프링와셔	WASHER , SPRING	2	M10		
402	14	V3042600100	소형육각너트보통2종	NUT , HEX/2	2	M10		
402	15	V2173610025	소형육각볼트보통(S)	BOLT , HEX/S	4	M10x25(S)		
402	16	V7231020080	O링(S)	O-RING , S	1	S80		
402	17	V2173610040	소형육각볼트보통(S)	BOLT , HEX/S	2	M10x40(S)		
402	18	20083030010A	플러그(직선/고압)	PLUG , STRAIT/HIGH	2			
402	19	V7201024014	O링(P)	O-RING , P	2	P14		
402	20	20084062400	분류밸브 ASSY	VALVE ASSY , DIVIDE	1			
402	21	20084060030A	플러그(직선/고압R1/4)	PLUG , STRAIT	2			
402	22	20084060040A	플러그(직선/고압R1/8)	PLUG , STRAIT	1			
402	23	V2113606030	육각볼트(S)	BOLT , HEX /S	2	M6x30(S)		
402	24	36313502011C	어댑터 (45도펌프용)	ADAPTER , 45	1			
402	25	37681850160	조임 밴드 (22)	BAND , CLAMP(22)	14			
402	26	20084020050C	HST호스(쿨러/탱크)	HOSE , COLLER/TANK	1			
402	27	20084020170	HST호스(HST/쿨러)	HOSE , HST/COLLER	1			
402	28	20084020140D	HST호스(필터/HST)	HOSE , FILLTER/HST	2			
402	29	20084020130D	HST호스(탱크/필터)	HOSE , TANK/FILLTER	1			
402	30	20084020070B	고압호스(펌프-조향밸브)	HOSE , DELIVERY/PUMP-TG	1			
402	31	20084020090D	고압호스(콘트롤밸브-실린더)	HOSE , DELIVERY/VALVE-CYLINDER	1			
402	32	20084020060D	페퍼	HOSE,GEAR CASE-FILLTER	1			

NOTE

402	배관	PD60	Year / Month 2009 / 02	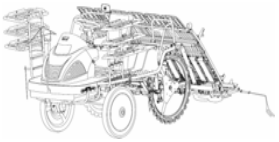

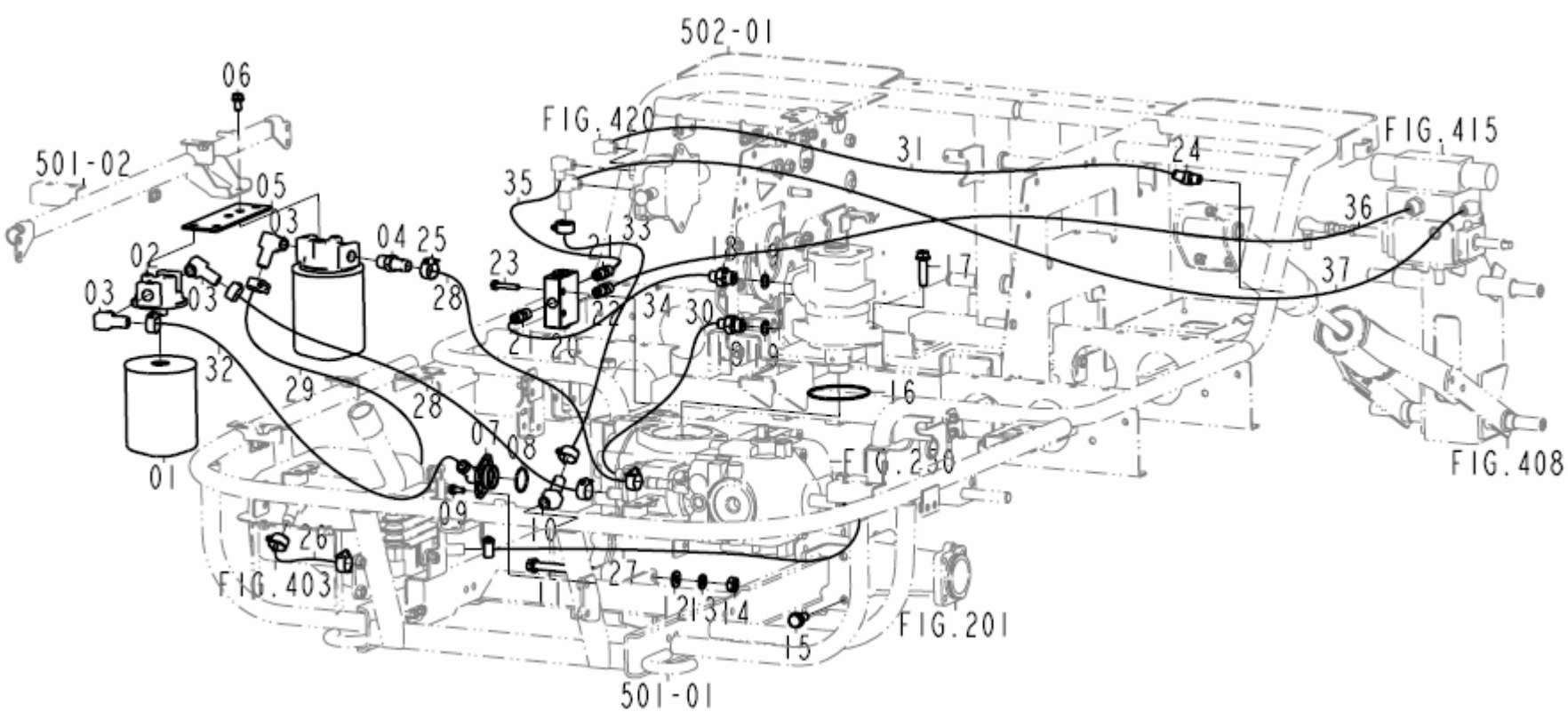

NOTE

PDF Complete
Your complimentary use period has ended. Thank you for using PDF Complete.
Click Here to upgrade to Unlimited Pages and Expanded Features

402	배관	PD60	Year / Month 2009 / 02

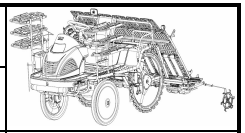

FIG.	NO.	부품번호	품명	PART NAME	수량	규격	비고	메모
402	33	20084020100B	리턴호스	HOSE , RETURN	1			
402	34	20084020190A	고압호스(조향밸브-분류밸브)	HOSE , DELIVERY/TG-DIVIDE VALVE	1			
402	35	20084020180B	고압호스(분류밸브-콘트롤밸브)	HOSE , DELIVERY/DIVIDE VALVE-Valve	1			
402	36	20084020110B	고압호스(분류밸브-롤링실린더)	HOSE , DELIVERY/DIVIDE VALVE-ROLLING CYLINDER	1			
402	37	20084020080D	고압호스(조향밸브-콘트롤밸브)	HOSE , DELIVERY/TG-VALVE	1			

NOTE	

403	HST탱크	PD60	Year / Month 2009 / 02	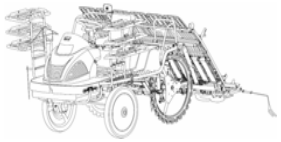

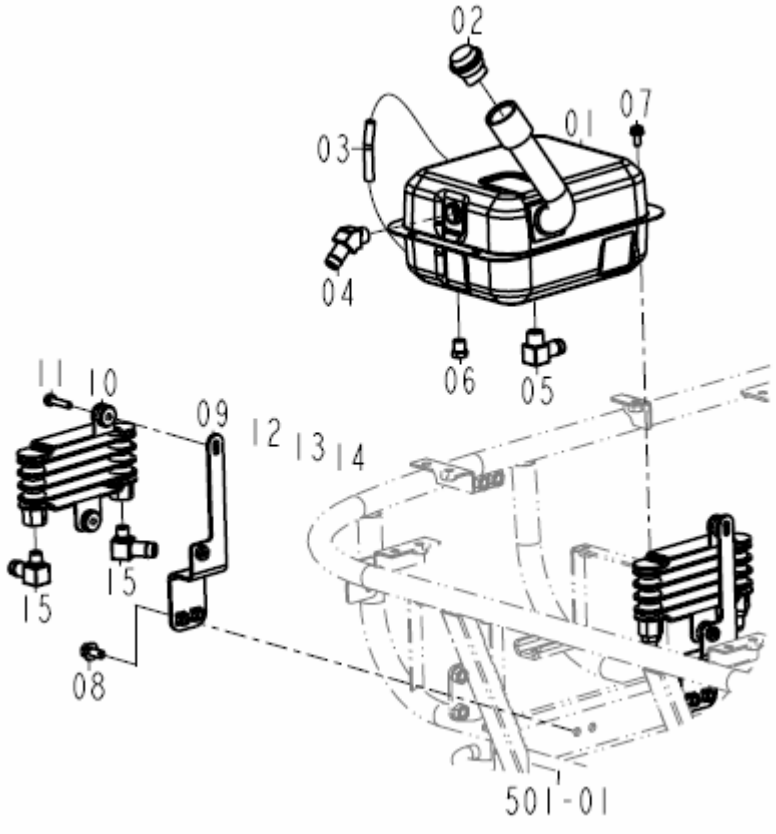

NOTE	

PDF Complete
Your complimentary use period has ended. Thank you for using PDF Complete.
Click Here to upgrade to Unlimited Pages and Expanded Features

403	HST 탱크	PD60	Year / Month 2009 / 02

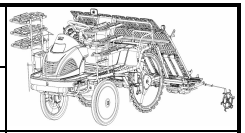

FIG.	NO.	부품번호	품명	PART NAME	수량	규격	비고	메모
403	01	20082512700D	HST탱크 COMP	TANK COMP , HST	1			
403	02	15184322500	주유구마개	CAP	1			
403	03	20082510020C	호스	HOSE	1			
403	04	34523700050	플러그(45도/저압)	PLUG , 45/LOW	1			
403	05	21324090040A	플러그(직각/저압)	PLUG , STRAIT/PT1/4	1			
403	06	79552010260A	드레인플러그(1/4)	PLUG , DRAIN/PT1/4	1			
403	07	V2113606016	소형육각볼트보통(S)	BOLT , HEX/S	4	M6x16(S)		
403	08	V2183608020	소형육각볼트보통(SP)	BOLT , HEX/SP	4	M8x20(SP)		
403	09	20081112601	라디에터스테이 COMP	STAY COMP , RADIATOR	2			
403	10	15605ZN1000	라디에타	RADIATOR	2			
403	11	V2113606030	육각볼트(S)	BOLT , HEX /S	4	M6x30(S)		
403	12	35605033020	와이어인출용와셔	WASHER , WIRE WITHDRAWAL	2			
403	13	V4011600060	스프링와셔	WASHER , SPRING	2	M6		
403	14	V3042600060	소형육각너트보통2종	NUT , HEX/2	2	M6		
403	15	20084030020	플러그(직각/底压)	PLUG , REACTANGLE/LOW	2			

NOTE	

408	실린더	PD60	Year / Month 2009 / 02	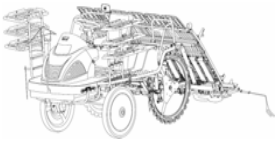

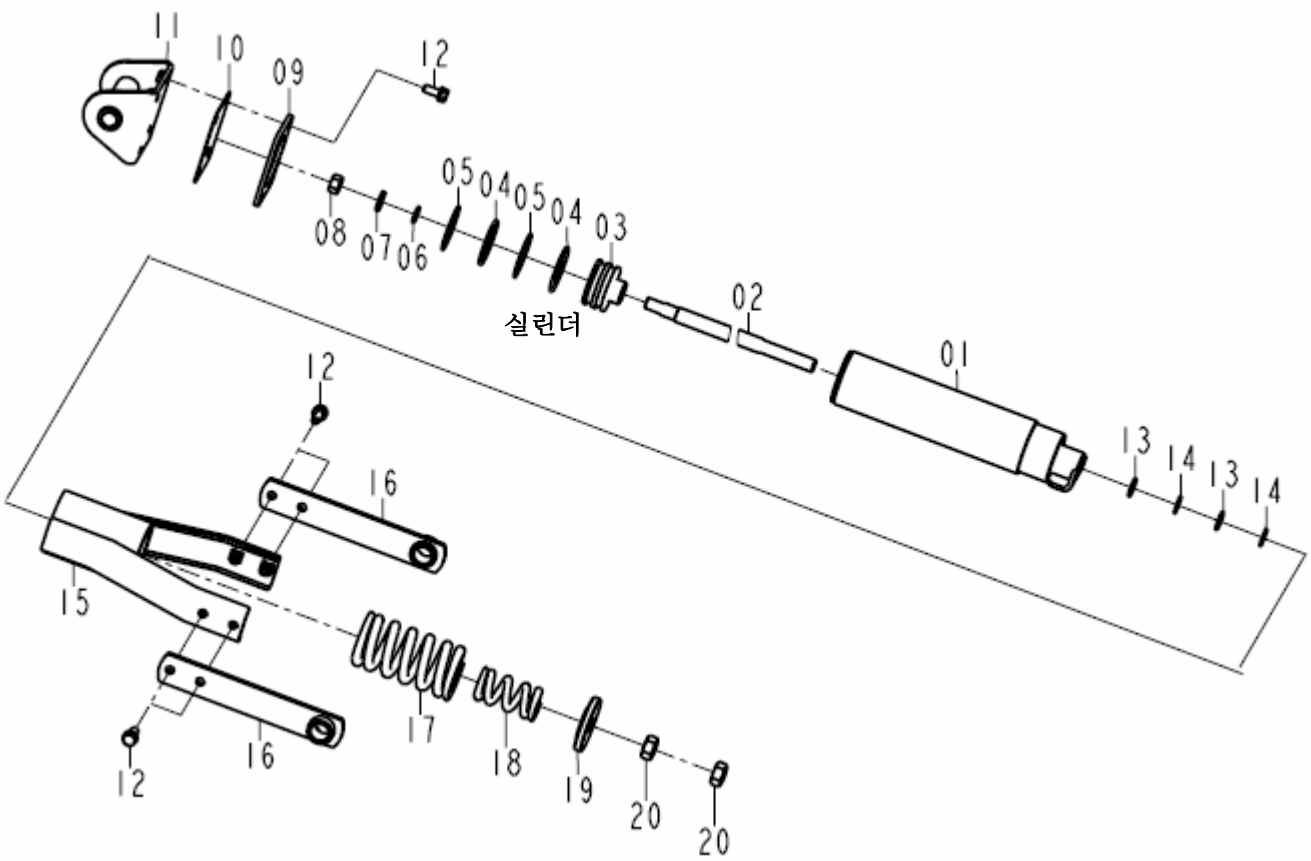

NOTE

PDF Complete
Your complimentary use period has ended. Thank you for using PDF Complete.
Click Here to upgrade to Unlimited Pages and Expanded Features

408	실린더	PD60	Year / Month 2009 / 02

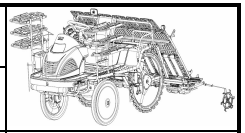

FIG.	NO.	부품번호	품명	PART NAME	수량	규격	비고	메모
408	01	20084082600C	실린더파이프 COMP	PIPE COMP , CYLINDER	1			
408	02	20084082273	피스톤로드	ROD , PISTON	1			
408	03	20084082262	피스톤	PISTON	1			
408	04	V7201035044	O링(P)	O-RING , P	2	P44		
408	05	V7301050044	백업링	RING , BACK UP	2	P44		
408	06	V7201024014	O링(P)	O-RING , P	1	P14		
408	07	V4011600120	스프링와셔	WASHER , SPRING	1	M12		
408	08	V3343600120	소형육각너트가는2종	NUT , HEX FINE/2	1	M12		
408	09	20084082280	연결판	PLATE	1			
408	10	20084082290A	가스킷	GASKET	1			
408	11	20084082700C	커버플레이트 COMP	PLATE COMP , COVER	1			
408	12	V2173608020	소형육각볼트보통(S)	BOLT , HEX/S	8	M8x20(S)		
408	13	V7201024016	O링(P)	O-RING , P	2	P16		
408	14	V7301020016	백업링	RING , BACK UP	2	P16		
408	15	20084082800	스프링케이스 COMP	CASE COMP , SPRING	1			
408	16	20084082301	스프링케이스고정플레이트 COMP	PLATE COMP , FIX/SPRING CASE	2			
408	17	20084080040C	스프링(HC116)	SPRING , HC116	1			
408	18	20084080050B	스프링(HC070)	SPRING , HC070	1			
408	19	20084080020	스프링지지플레이트	PLATE , SPRING	1			
408	20	V3342600140	소형육각너트가는2종	NUT , HEX FINE/2	2	M14		

NOTE	

415	상하링크	PD60	Year / Month 2009 / 02	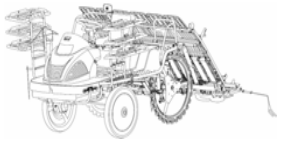

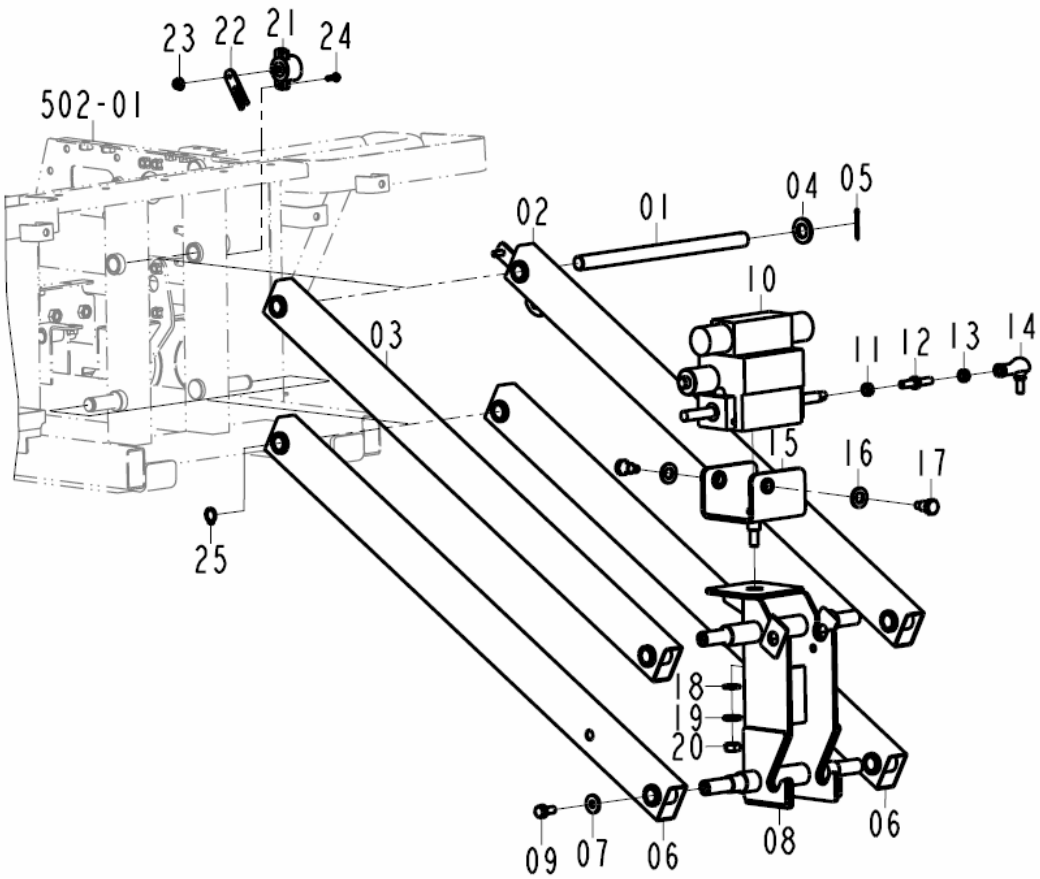

NOTE

PDF Complete
Your complimentary use period has ended. Thank you for using PDF Complete.
Click Here to upgrade to Unlimited Pages and Expanded Features

415	상하링크	PD60	Year / Month 2009 / 02

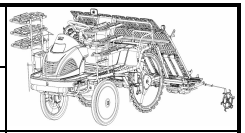

FIG.	NO.	부품번호	품명	PART NAME	수량	규격	비고	메모
415	01	20084080070B	실린더핀	PIN , CYLINDER	1			
415	02	20084152303	상링크(우)COMP	LINK COMP , UPR/RH	1			
415	03	20084152202A	상링크(좌) COMP	LINK COMP , UPR/LH	1			
415	04	V4111600160	평와셔	WASHER , PLAIN	2	M16		
415	05	V5001925030	분할핀	PIN , SPLIT	2	2.5X30		
415	06	20084162200	하링크(K) COMP	LINK COMP , LOW/K	2			
415	07	41061020280	중간핀와셔	WASHER , MIDDLE PIN	4			
415	08	20084172104A	헹거베이스 COMP(K)	BASE COMP , HANGER(K)	1			
415	09	V2173608020	소형육각볼트보통	BOLT , HEX	4	M8x20(S)		
415	10	20084062300	롤링실린더 ASSY	CYLINDER ASSY , ROLLING	1			
415	11	V3002600080	육각너트보통1종	NUT , HEX/1	1	M8		
415	12	20084060021	조정로드	ROD , ADJUST	1			
415	13	20084060110	소형육각너트보통2종	NUT.(L,M10)	1	M10		
415	14	20084060120	엘보(L)	ELBOW , LH	1			
415	15	20084172200	보조플레이트 COMP	PLATE COMP,LINK	1			
415	16	V4111600120	평와셔	WASHER , PLAIN	2	M12		
415	17	20084060011A	롤링볼트	BOLT , ROLLING	2			
415	18	V4111600100	평와셔	WASHER , PLAIN	1	M10		
415	19	V4011600100	스프링와셔	WASHER , SPRING	1	M10		
415	20	V3042600100	소형육각너트보통2종	NUT , HEX/2	1	M10		
415	21	20084200021	포텐셔메터	POTENTIOMETER	1			
415	22	20085260030	포텐셔메터암	ARM , POTENTIOMETER	1			
415	23	V3802600060	플랜지붙이육각너트	NUT , HEX FLANGE	1	M6		
415	24	V1222604016	십자홈냄비작은나사(SP)	SCREW , C/R PAN/SP	2	M4x16(SP)		
415	25	V7081400150	E형멈춤링	E-RING	2	15		

NOTE	

420	모터플레이트	PD60	Year / Month 2009 / 02	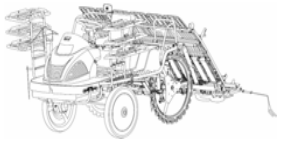

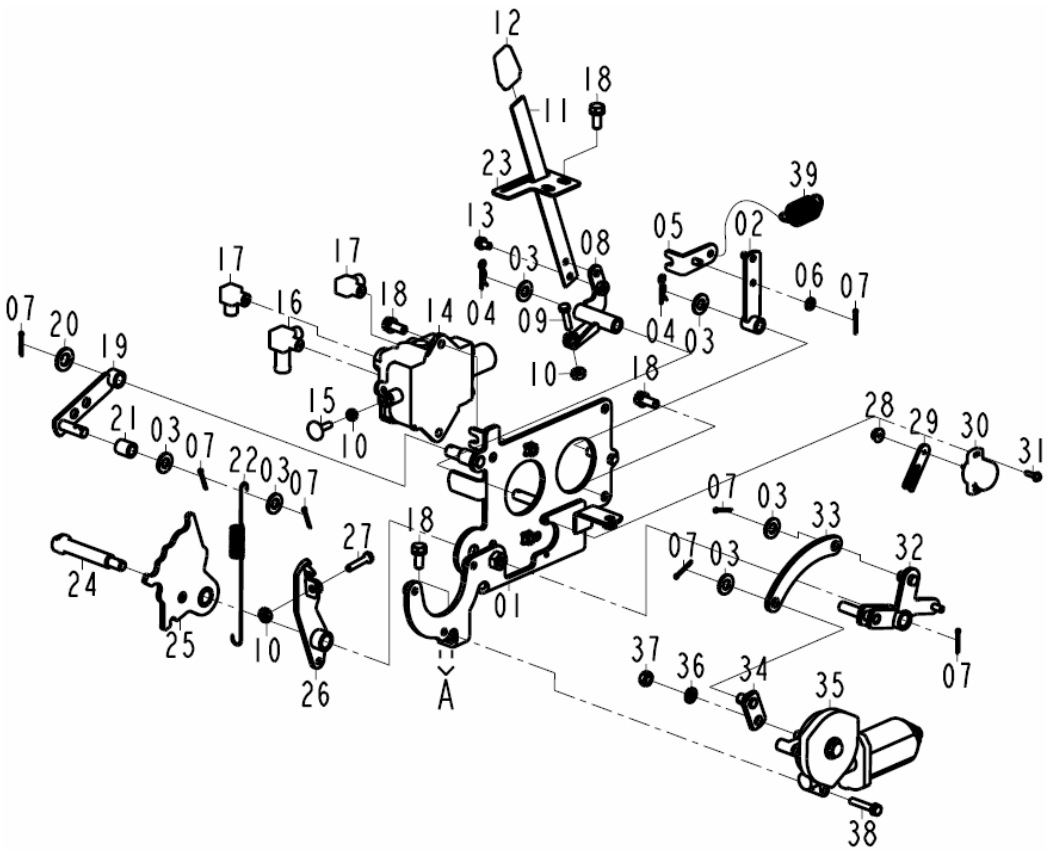

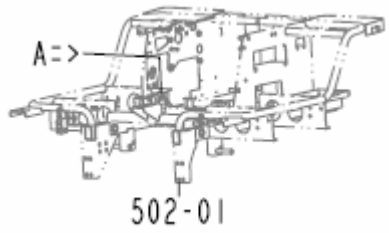

NOTE	

PDF Complete
Your complimentary use period has ended. Thank you for using PDF Complete.
Click Here to upgrade to Unlimited Pages and Expanded Features

420	모터플레이트	PD60	Year / Month 2009 / 02	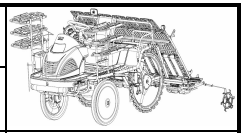

FIG.	NO.	부품번호	품명	PART NAME	수량	규격	비고	메모
420	01	20084202202A	모터플레이트 COMP	PLATE COMP , MOTOR	1			
420	02	20084222903A	감도링크 COMP	LINK COMP , SENSITIVITY	1			
420	03	V4111000100	평와셔	WASHER , PLAIN	6	M10		
420	04	20082100040	헤어핀(D=10)	PIN , SNAP/10	2			
420	05	20084223002	케이블받침 COMP	HOLDER COMP , CABLE	1			
420	06	V4111600060	평와셔	WASHER , PLAIN	1	M6		
420	07	V5001925020	분할핀	PIN , SPLIT	7	2.5X20		
420	08	20084223602	고정암 COMP	ARM COMP , LOCK	1			
420	09	V2003606025	소형육각볼트보통	BOLT , HEX	1	M6X20		
420	10	V3002600060	육각너트보통1종	NUT , HEX/1	3	M6		
420	11	20084220102	고정레버	LEVER , LOCK	1			
420	12	20084220130	고정레버손잡이	GRIP , STOP	1			
420	13	V2113606012	육각볼트(S)	BOLT , HEX /S	1	M6x12(S)		
420	14	20084052300B	콘트롤밸브 ASSY	VALVE , CONTROL	1			
420	15	20084050010	밸브어저스터	ADJUSTER , VALVE	1			
420	16	20084050030A	리턴어댑터(직선,1/4)	ADAPTER , STRAIT/RETURN	1			
420	17	37681850221A	어댑터 (90도펌프용)	ADAPTER , 90^	2			
420	18	V2173608020	소형육각볼트보통(S)	BOLT , HEX/S	9	M8x20(S)		
420	19	20084202702	롤러암 COMP	ARM COMP , ROLLER	1			
420	20	V4111600120	평와셔	WASHER , PLAIN	1	M12		
420	21	20084200040A	롤러(10X15X18)	ROLLER , 10X15X18	1			
420	22	20084200060	스프링(HE180)	SPRING , HE180	1			
420	23	20084220112	고정레버가이드	GUIDE , LEVER/LOCK	1			
420	24	20084200120C	지지핀	PIN , SUPPORT	1			
420	25	20084203002	밸브작동캠 COMP	CAM COMP , VALVE CONTROL	1			
420	26	20084222202	감지암 COMP	ARM COMP , SENSING	1			
420	27	V2003606030	육각볼트(보통)	BOLT , HEX	1	M6x30		
420	28	V3802600060	플랜지붙이육각너트	NUT , HEX FLANGE	1	M6		
420	29	20085260030	포텐셔메터암	ARM , POTENTIOMETER	1			
420	30	20084200021	포텐셔메터	POTENTIOMETER	1			
420	31	V1222604016	십자홈냄비작은나사(SP)	SCREW , C/R PAN/SP	2	M4x16(SP)		
420	32	20084202902	모터링크 COMP	LINK COMP , MOTOR	1			

NOTE	

420	모터플레이트	PD60	Year / Month 2009 / 02	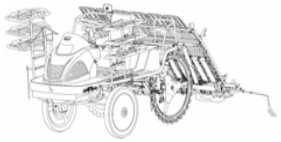

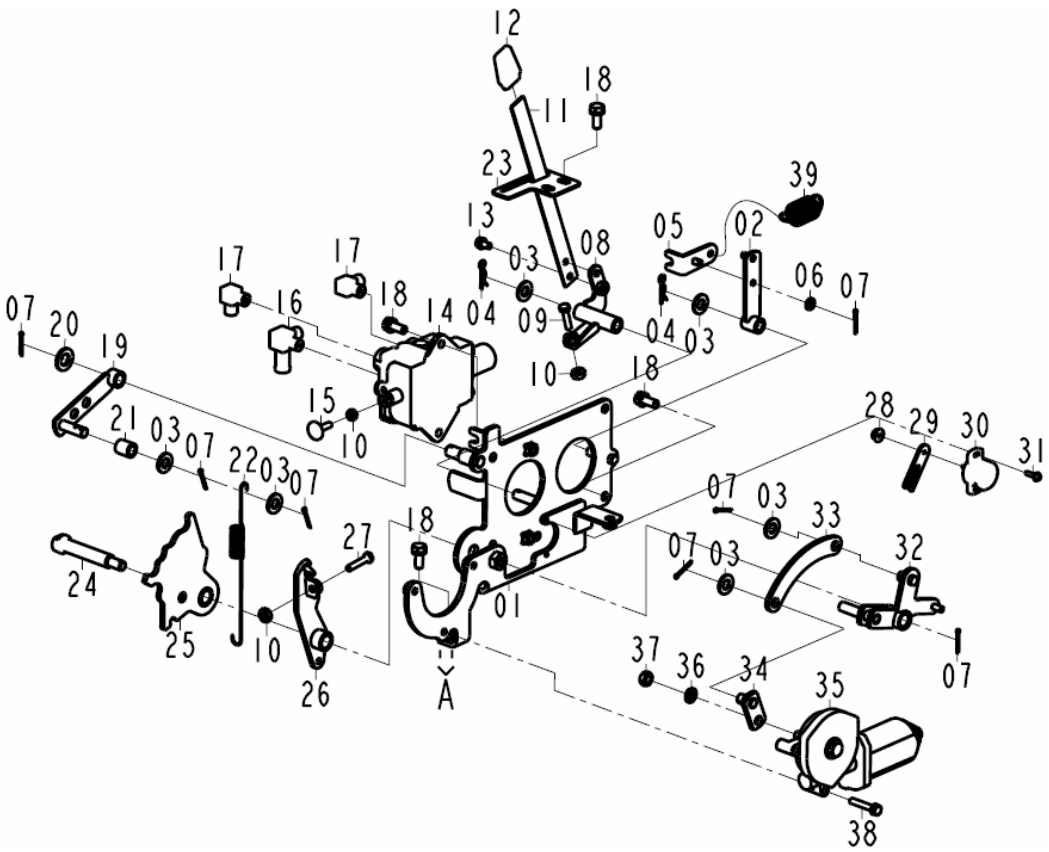

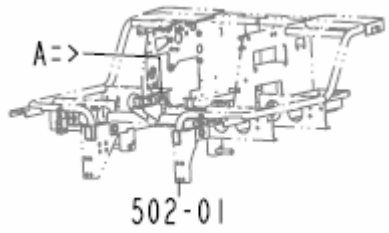

NOTE	

PDF Complete
Your complimentary use period has ended. Thank you for using PDF Complete.
Click Here to upgrade to Unlimited Pages and Expanded Features

420	모터플레이트	PD60	Year / Month 2009 / 02

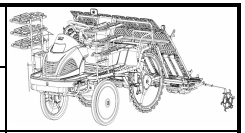

FIG.	NO.	부품번호	품명	PART NAME	수량	규격	비고	메모
420	33	20084200050	작동링크	LINK PLATE	1			
420	34	20084202400	모터 ASSY	MOTOR ASSY	1			
420	35	20085263401	모터구동판 COMP	PLATE COMP,LINKAGE/ELECTRICAL	1			
420	36	V4011600080	스프링와셔	WASHER , SPRING	1	M8		
420	37	V3042600080	소형육각너트보통2종	NUT , HEX/2	1	M8		
420	38	V2123606035	육각볼트(보통)	BOLT , HEX/SP	3	M6x35(SP)		
420	39	20084220090B	스프링(HE056)	SPRING , HE056	1			

NOTE	

501	전프레임	PD60	Year / Month 2009 / 02	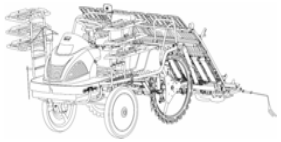

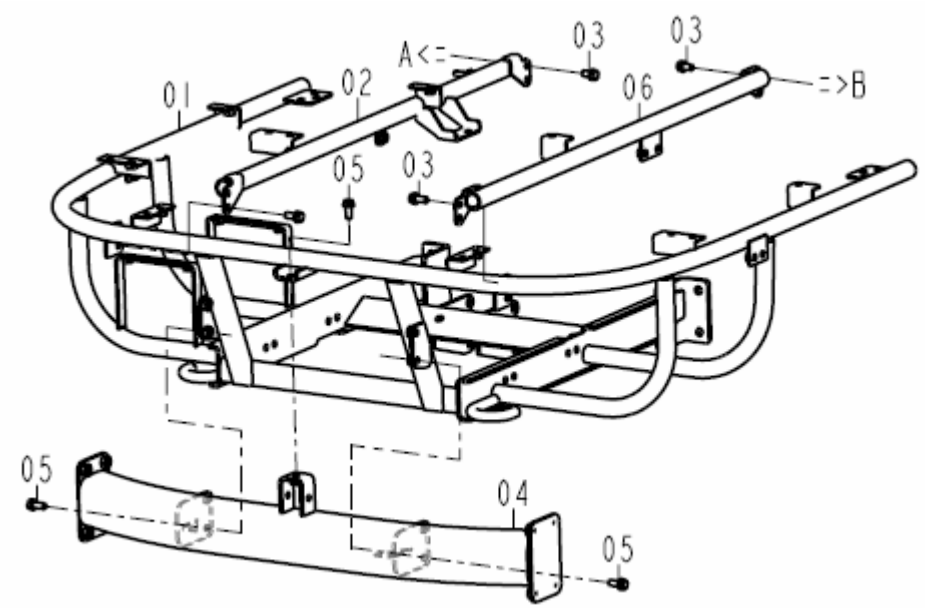

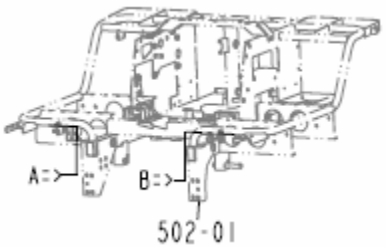

NOTE	

PDF Complete
Your complimentary use period has ended. Thank you for using PDF Complete.
Click Here to upgrade to Unlimited Pages and Expanded Features

501	전프레임	PD60	Year / Month 2009 / 02

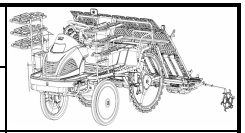

FIG.	NO.	부품번호	품명	PART NAME	수량	규격	비고	메모
501	01	20085012102	엔진프레임 COMP	FRAME COMP , ENGINE	1			
501	02	20085012300E	파이프(우) COMP	PIPE COMP , RH	1			
501	03	V2173608016	소형육각볼트보통(S)	BOLT , HEX/S	8	M8x16(S)		
501	04	20085012600B	범퍼COMP	BUMPER COMP	1			
501	05	V2173608020	소형육각볼트보통(S)	BOLT , HEX/S	5	M8x20(S)		
501	06	20085012700	파이프(좌) COMP	PIPE COMP , LH	1			

NOTE	

502	메인프레임	PD60	Year / Month 2009 / 02	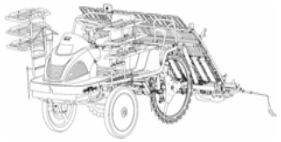

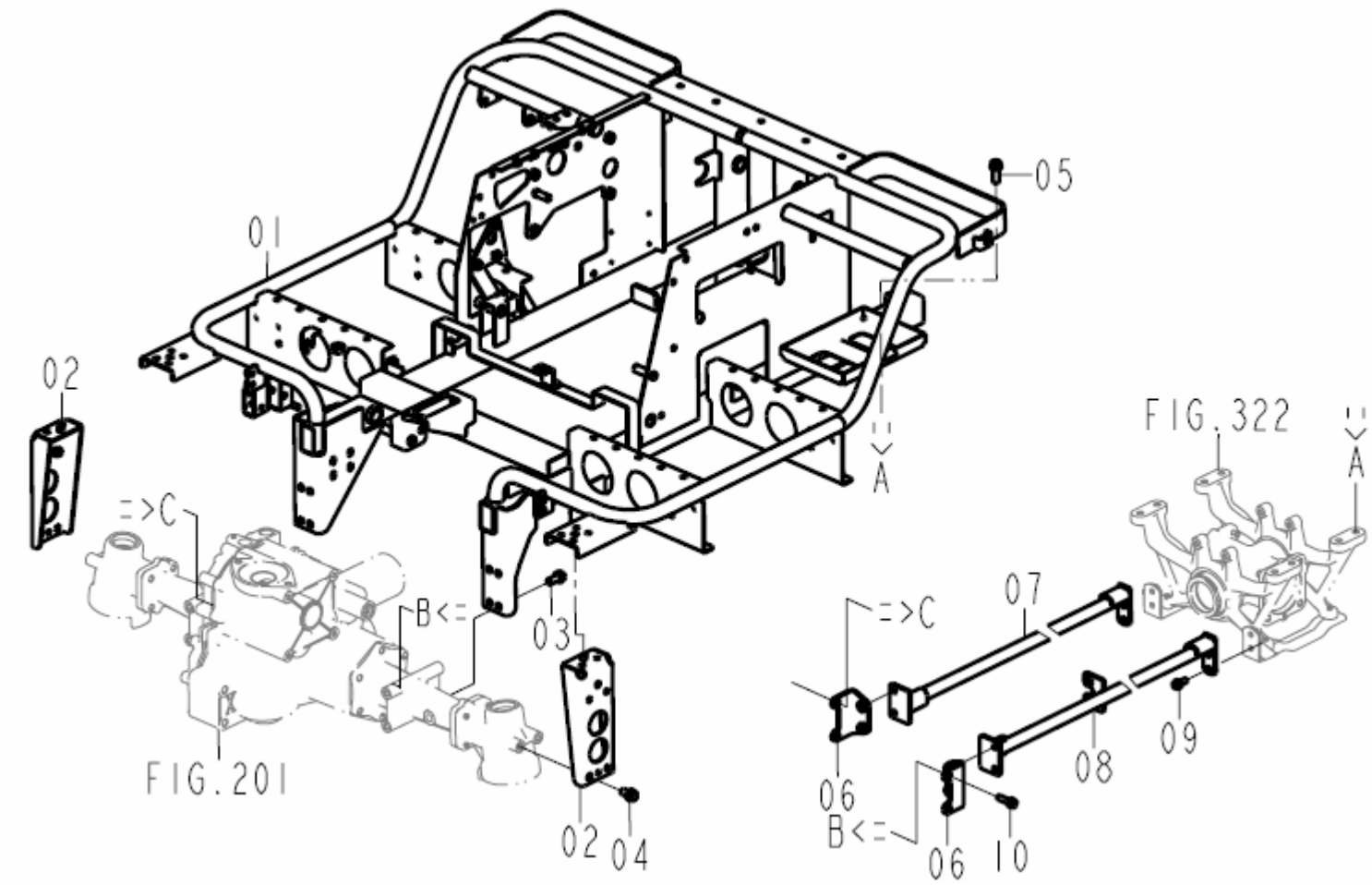

NOTE	

PDF Complete
Your complimentary use period has ended. Thank you for using PDF Complete.
Click Here to upgrade to Unlimited Pages and Expanded Features

502	메인프레임	PD60	Year / Month 2009 / 02	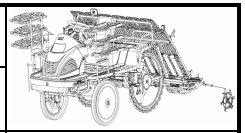

FIG.	NO.	부품번호	품명	PART NAME	수량	규격	비고	메모
502	01	20085022102A	메인프레임 COMP	FRAME COMP , MAIN	1			
502	02	20085022900D	지지플레이트(외) COMP	PLATE COMP , OUT/SUPPORT	2			
502	03	V2173610025	소형육각볼트보통(S)	BOLT , HEX/S	4	M10x25(S)		
502	04	V2173610020	소형육각볼트보통(S)	BOLT , HEX/S	4	M10x20(S)		
502	05	V2173610030	소형육각볼트보통(S)	BOLT , HEX/S	8	M10x30(S)		
502	06	20085022800E	지지플레이트 COMP	PLATE COMP , SUPPORT	2			
502	07	20085022701	지지파이프(우) COMP	PIPE COMP , RH/SUPPORT	1			
502	08	20085022601	지지파이프(좌) COMP	PIPE COMP , LH/SUPPORT	1			
502	09	V2173608020	소형육각볼트보통(S)	BOLT , HEX/S	8	M8X20		
502	10	V2183608035	소형육각볼트보통(SP)	BOLT , HEX/SP	4	M8x35(SP)		

NOTE	

503	후방가이드	PD60	Year / Month 2009 / 02	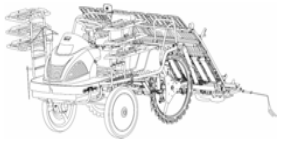

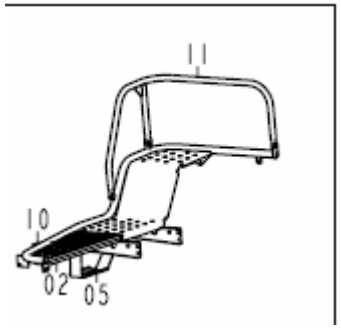

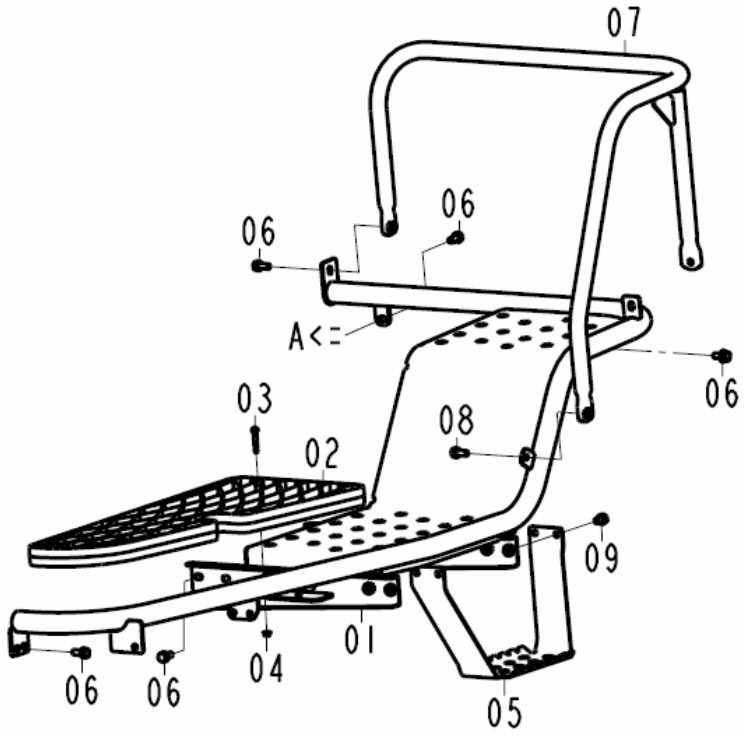

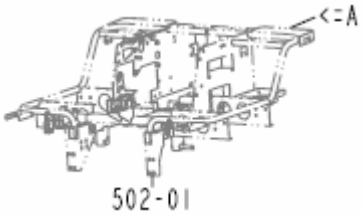

NOTE

PDF Complete
Your complimentary use period has ended. Thank you for using PDF Complete.
Click Here to upgrade to Unlimited Pages and Expanded Features

503	후방가이드	PD60	Year / Month 2009 / 02	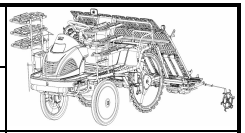

FIG.	NO.	부품번호	품명	PART NAME	수량	규격	비고	메모
503	01	20085032101A	사이드프레임(좌) COMP	FRAME COMP , LH/SIDE	1			
503	02	20085030020B	연장발판	FLOOR , EXTENSION	2			
503	03	V1222605035	십자홈냄비작은나사(SP)	SCREW , C/R PAN/SP	8	M5x35(SP)		
503	04	V3802600050	플랜지붙이육각너트	NUT , HEX FLANGE	8	M5		
503	05	20085030032	보조발판	PLATE , STEP	2			
503	06	V2183608020	소형육각볼트보통(SP)	BOLT , HEX/SP	20	M8x20(SP)		
503	07	20085122202A	후방가이드(좌) COMP	REAR GUIDE COMP, LH	1			
503	08	V2173608020	소형육각볼트보통(S)	BOLT , HEX/S	2	M8x20(S)		
503	09	V2173608016	소형육각볼트보통(S)	BOLT , HEX/S	8	M8x16(S)		
503	10	20085032201	사이드프레임(좌) COMP	FRAME COMP , RH/SIDE	1			
503	11	20085122302A	후방가이드(우) COMP	REAR GUIDE COMP, RH	1			

NOTE	

505	발판	PD60	Year / Month 2009 / 02	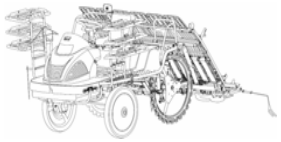

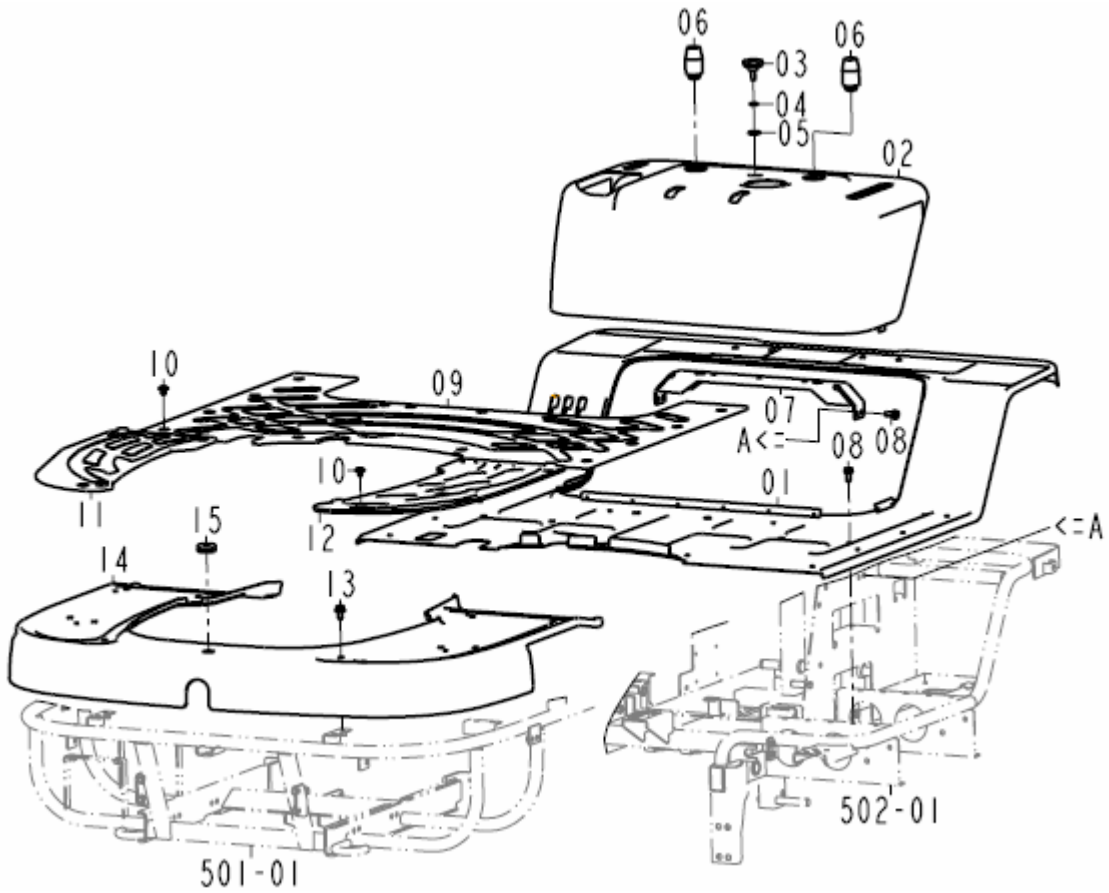

NOTE	

PDF Complete
Your complimentary use period has ended. Thank you for using PDF Complete.
Click Here to upgrade to Unlimited Pages and Expanded Features

505	발판	PD60	Year / Month 2009 / 02	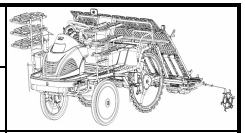

FIG.	NO.	부품번호	품명	PART NAME	수량	규격	비고	메모
505	01	20085052102	발판(메인) COMP	FLOOR COMP , MAIN	1			
505	02	20085050071	커버(중)	COVER , CTR	1			
505	03	13766010031	손잡이보울트(M08X21)	BOLT , HAND	1			
505	04	V4011600080	스프링와셔	WASHER , SPRING	1	M8		
505	05	41061020280	중간핀와셔	WASHER , MIDDLE PIN	1			
505	06	21325640011C	씨트 쿠션(상)	CUSHION , UPR SEAT	2			
505	07	20085112700	시트받침 COMP	PLATE SUPPORT COMP , SEAT	1			
505	08	V2173608020	소형육각볼트보통(S)	BOLT , HEX/S	12	M8x20(S)		
505	09	20085050012	매트(중,K)	MAT , CTR/K	1			
505	10	16996043100A	리벳SET	RIVET	20			
505	11	20085050020C	매트(좌/전/K)	MAT , LH/FR/K	1			
505	12	20085050030C	매트(우/전/K)	MAT , RH/FR/K	1			
505	13	V2183608020	소형육각볼트보통(SP)	BOLT , HEX/SP	8	M8x20(SP)		
505	14	20085052201	발판(전) COMP	FLOOR COMP , FR	1			
505	15	37371540030A	시트쿠션	CUSHION , SEAT	1			

NOTE	

506	본니트	PD60	Year / Month 2009 / 02	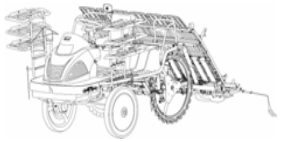

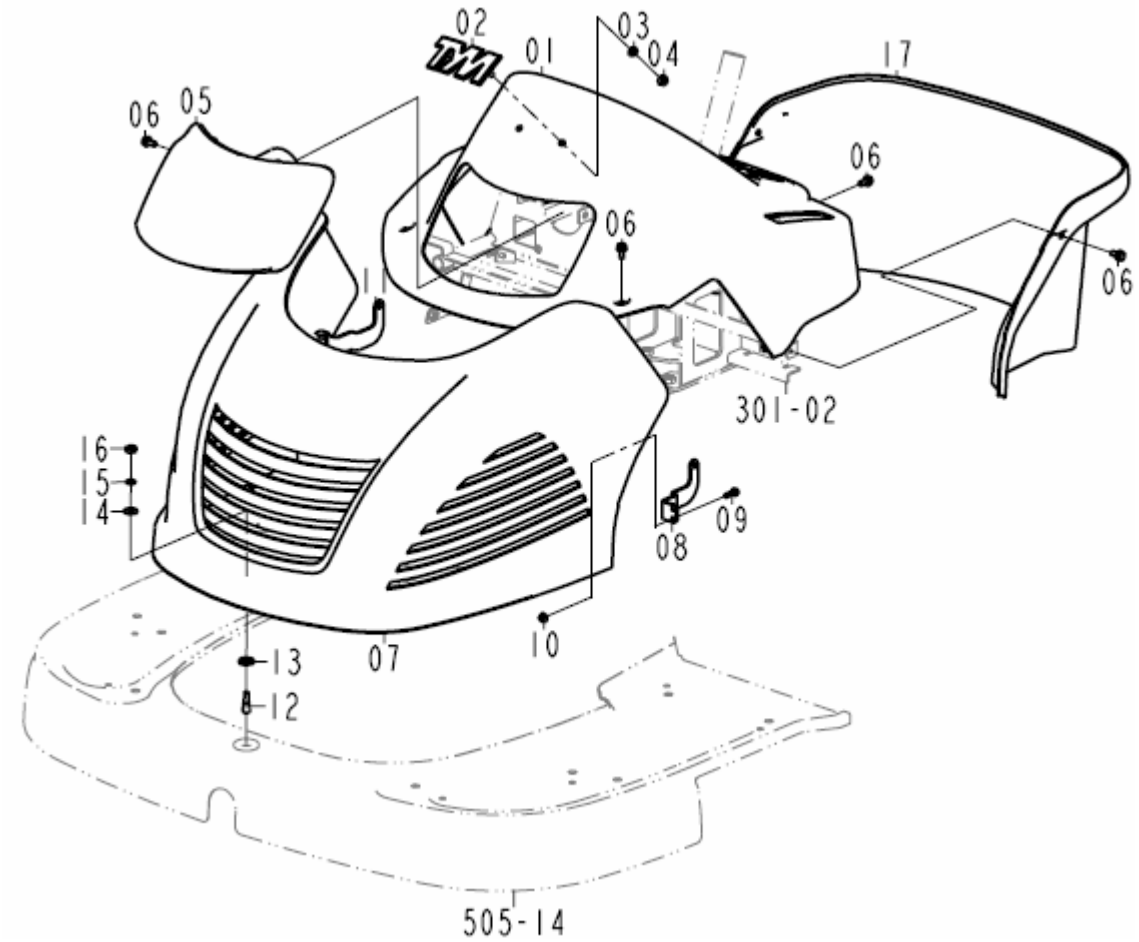

NOTE	

PDF Complete
Your complimentary use period has ended. Thank you for using PDF Complete.
Click Here to upgrade to Unlimited Pages and Expanded Features

506	본니트	PD60	Year / Month 2009/ 02

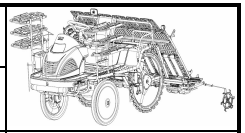

FIG.	NO.	부품번호	품명	PART NAME	수량	규격	비고	메모
506	01	20085060070C	본니트(상)	BONNET , UPR	1			
506	02	19959010010	엠블럼 , TYM	EMBLEM , TYM	1			
506	03	V4111000060	평와셔	WASHER , PLAIN	2	M6		
506	04	V3612600060	플랜지붙이육각너트	NUT , HEX FLANGE	2	M6		
506	05	20085332100	전조등 ASSY	LAMP ASSY , HEAD	1			
506	06	V2123606016	육각볼트(SP)	BOLT , HEX/SP	8	M6x16(SP)		
506	07	20085060010C	본니트(전)	BONNET , FR	1			
506	08	20085060041	본니트 브라켓(우)	PLATE FIX,BONNET/LH/FR	1			
506	09	V1222605020	십자홈냄비작은나사(SP)	SCREW , C/R PAN/SP	4	M5x20(SP)		
506	10	V3802600050	플랜지붙이육각너트	NUT , HEX FLANGE	4	M5		
506	11	20085060031	본니트 브라켓(좌)	PLATE FIX,BONNET/RH/FR	1			
506	12	20085060110A	본니트고정핀	PIN	1			
506	13	20085060120	칼라	COLLAR	1			
506	14	35605033020	와이어인출용와셔	WASHER , WIRE WITHDRAWAL	1			
506	15	V4011600060	스프링와셔	WASHER , SPRING	1	M6		
506	16	V3002600060	육각너트보통1종	NUT , HEX/1	1	M6		
506	17	20085060050B	본니트(후)	BONNET , RR	1			

NOTE	

511	시트	PD60	Year / Month 2009 / 02	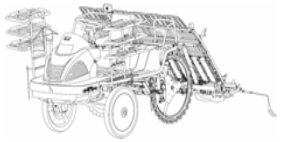

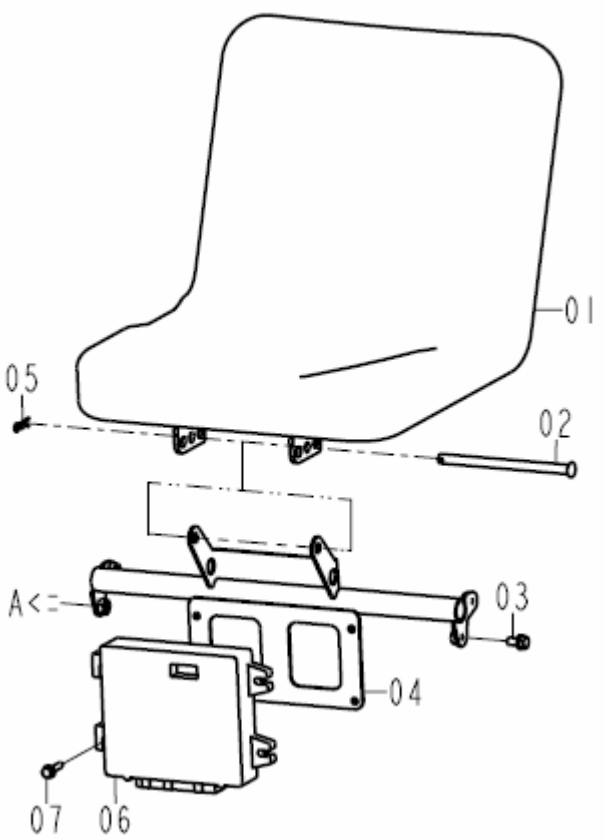

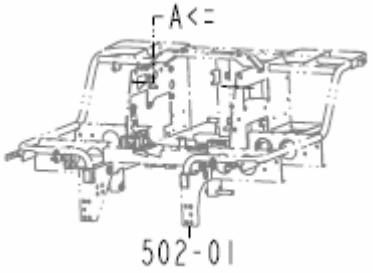

NOTE	

PDF Complete
Your complimentary use period has ended. Thank you for using PDF Complete.
Click Here to upgrade to Unlimited Pages and Expanded Features

511	시트	PD60	Year / Month 2009 / 02

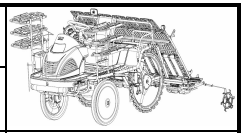

FIG.	NO.	부품번호	품명	PART NAME	수량	규격	비고	메모
511	01	20085112100	시트 ASSY	SEAT ASSY	1			
511	02	20085110010	시트 고정핀	PIN , SEAT	1			
511	03	V2173608016	소형육각볼트보통(S)	BOLT , HEX/S	4	M8X16		
511	04	20085112201	시트고정 COMP	PLATE COMP , SEAT	1			
511	05	V5601600010	헤어핀 (10)	PIN , SNAP/10	1	10		
511	06	20085402201A	콘트롤러 ASSY	CONTROLLER ASSY	1			
511	07	V2123606030	육각볼트(SP)	BOLT , HEX/SP	4	M6x30(SP)		

NOTE	

523	센터마커	PD60	Year / Month 2009 / 02	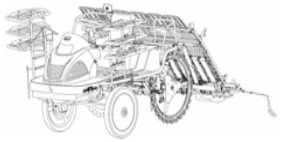

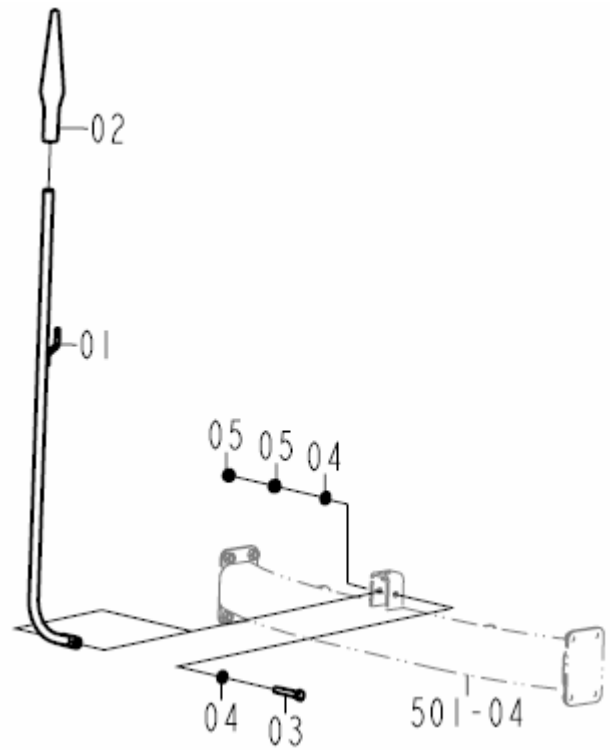

NOTE	

PDF Complete
Your complimentary use period has ended. Thank you for using PDF Complete.
Click Here to upgrade to Unlimited Pages and Expanded Features

523	센터마커	PD60	Year / Month 2009/ 02	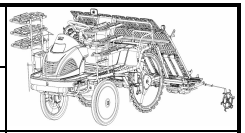

FIG.	NO.	부품번호	품명	PART NAME	수량	규격	비고	메모
523	01	20085232101	마커(중) COMP	MARKER COMP , CTR	1			
523	02	20085230010	마스코트	MASCORT	1			
523	03	V2173608060	소형육각볼트보통(S)	BOLT , HEX/S	1	M8X60		
523	04	V4111600080	평와셔	WASHER , PLAIN	2	M8		
523	05	V3042600080	소형육각너트보통2종	NUT , HEX/2	2	M8		

NOTE	

525	사이드마커	PD60	Year / Month 2009 / 02	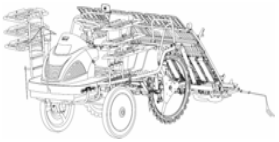

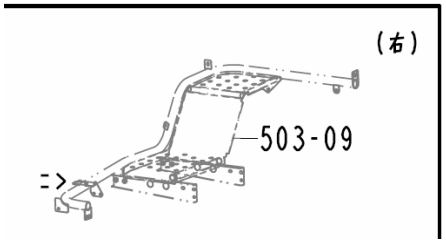

NOTE	

PDF Complete
Your complimentary use period has ended. Thank you for using PDF Complete.
Click Here to upgrade to Unlimited Pages and Expanded Features

525	사이드마커	PD60	Year / Month 2009 / 02

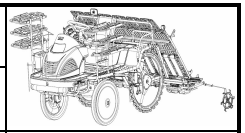

FIG.	NO.	부품번호	품명	PART NAME	수량	규격	비고	메모
525	01	20085250010A	사이드마커	MARKER , SIDE	2			
525	02	20085250030	마커고무	RUBBER , MARKER	2	M4		
525	03	21615250010B	마커	MARKER	2	M4x20		
525	04	21615250020	레버손잡이(적색)	GRIP , LEVER/RED	2			
525	05	20085252100	고정판(좌) COMP	BLOCK PLATE COMP,LH/SIDE	1			
525	06	20085252200	고정판(우) COMP	BLOCK PLATE COMP,RH/SIDE	1			
525	07	20085250050	스프링(HC23.5)	SPRING,HC23.5	2			
525	08	V3612600080	플랜지붙이육각너트	NUT,HEX WASHER	2			

NOTE	

526	마커콘트롤	PD60	Year / Month 2009 / 02	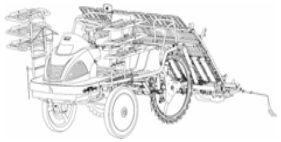

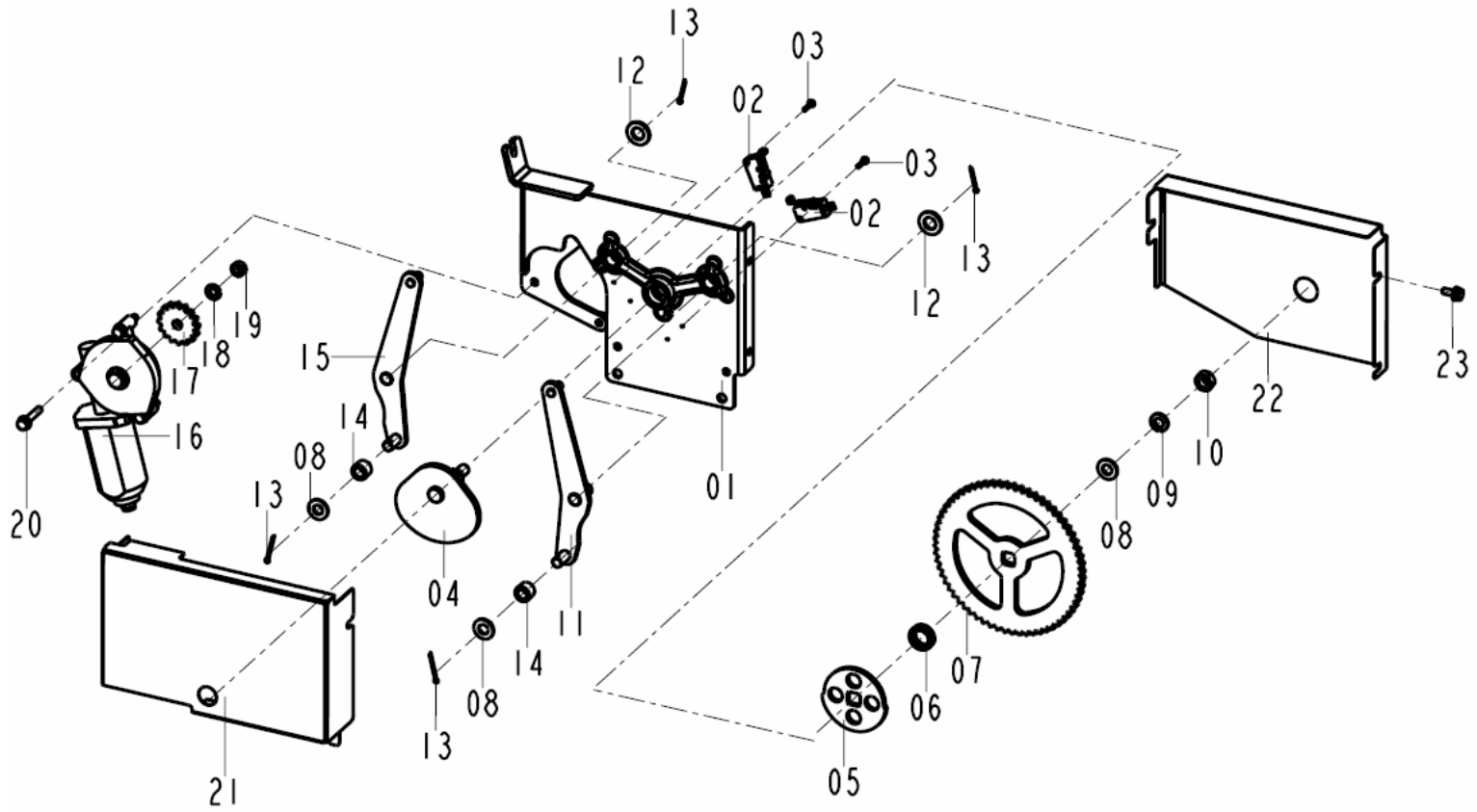

NOTE	

PDF Complete
Your complimentary use period has ended. Thank you for using PDF Complete.
Click Here to upgrade to Unlimited Pages and Expanded Features

526	마커콘트롤	PD60	Year / Month 2009 / 02	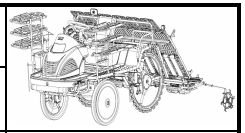

FIG.	NO.	부품번호	품명	PART NAME	수량	규격	비고	메모
526	01	20085263701C	절환베이스 COMP	BASE COMP , TURNABOUT	1			
526	02	20082153200	마커리미트스위치ASSY	SWITCH	2			
526	03	V1222603020	십자홈냄비작은나사(SP)	SCREW , C/R PAN/SP	2	M3x20(SP)		
526	04	20085264101	조작 힌지 COMP	HINGE COMP,CONTROL	1			
526	05	20085260121	플레이트	PLATE	1			
526	06	20085260111	허브	HUB	1	17x25x4.5		
526	07	20085270030	기어(64)	GEAR,64	1			
526	08	V4111600100	평와셔	WASHER , PLAIN	3	M10		
526	09	V4011600100	스프링와셔	WASHER , SPRING	1	M10		
526	10	V3042600100	소형육각너트보통2종	NUT , HEX/2	1	M10		
526	11	20085263901A	마커힌지COMP(우)	HINGE COMP,RH/MARKER	1			
526	12	V4111600120	평와셔	WASHER , PLAIN	1	M12		
526	13	V5001925025	분할핀	PIN , SPLIT	4	2.5X25		
526	14	20085260090A	허브	HUB	2	10x16x12		
526	15	20085263801A	마커힌지COMP(좌)	HINGE COMP,LH/MARKER	1			
526	16	20084202400	모터 ASSY	MOTOR ASSY	1			
526	17	20085270040A	기어(10)	GEAR,10	1			
526	18	V4011600080	스프링와셔	WASHER , SPRING	1	M8		
526	19	V3042600080	소형육각너트보통2종	NUT , HEX/2	1	M8		
526	20	V2123606025	육각볼트(SP)	BOLT , HEX/SP	3	M6x25(S)		
526	21	20085260130A	커버(전)	COVER,FR	1			
526	22	20085260141	커버(후)	COVER,RR	1			
526	23	V2113606016	육각볼트(S)	BOLT , HEX /S	4	M6x16(SP)		

NOTE	

531	판넬스위치	PD60	Year / Month 2009 / 02	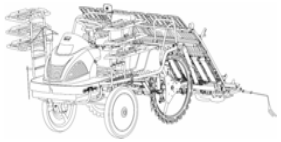

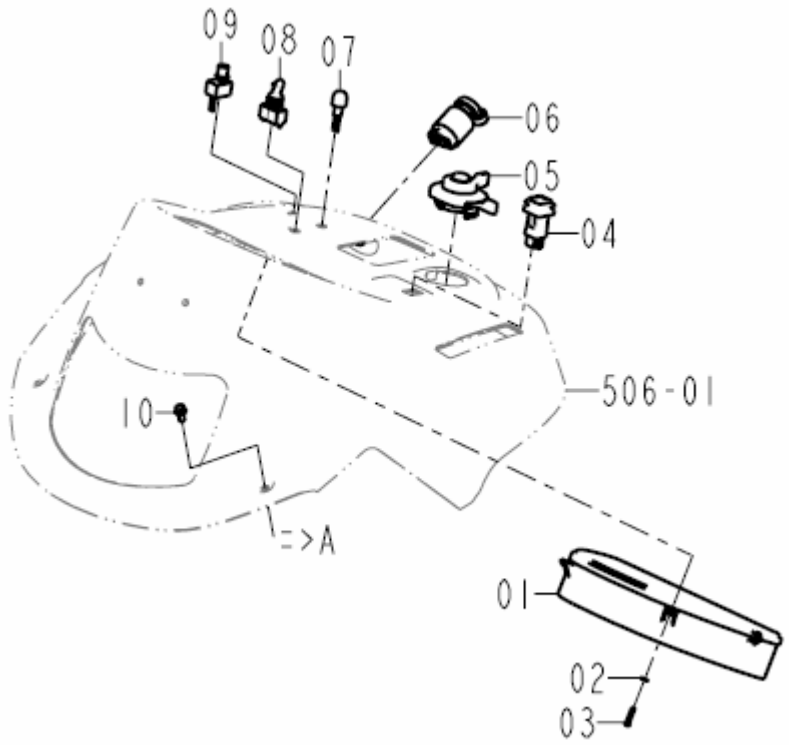

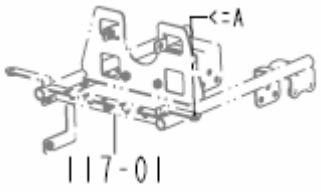

NOTE	

PDF Complete
Your complimentary use period has ended. Thank you for using PDF Complete.
Click Here to upgrade to Unlimited Pages and Expanded Features

531	판넬스위치	PD60	Year / Month 2009/ 02

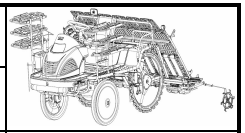

FIG.	NO.	부품번호	품명	PART NAME	수량	규격	비고	메모
531	01	20085312100	미터판넬(K) ASSY	PANEL ASSY , METER/K	1			
531	02	V4111600040	평와셔	WASHER , PLAIN	4	M4		
531	03	V1922604020	태핑나사	SCREW , TAPPING	4	M4x20		
531	04	20085312400	식부스위치 ASSY	SWITCH ASSY , PLANTING	1			
531	05	20085312300	콤비네이션스위치 ASSY	SWITCH ASSY , COMBINATION	1			
531	06	20085322100	시동스위치 SET	SWITCH SET , STARTING	1			
531	07	20085332200	스위치(혼정지) ASSY	SWITCH ASSY , STOP/BUZZER	1			
531	08	20085312701	마커선택스위치 ASSY	SWITCH ASSY , MARKER	1			
531	09	20085383300	볼륨(수평미세조정) ASSY	VOLUME ASSY , ADJUST/LEVEL	1			
531	10	V2123606016	육각볼트(SP)	BOLT , HEX/SP	2	M6x16(SP)		

NOTE	

532	배터리	PD60	Year / Month 2009 / 02	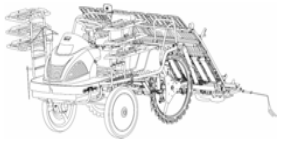

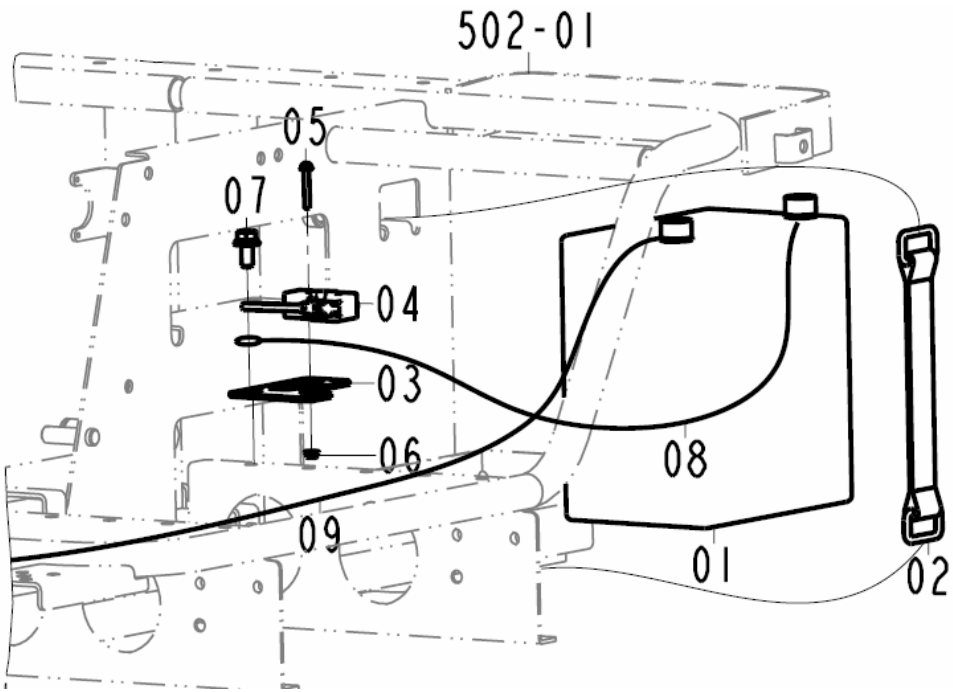

NOTE	

PDF Complete
Your complimentary use period has ended. Thank you for using PDF Complete.
Click Here to upgrade to Unlimited Pages and Expanded Features

532	배터리	PD60	Year / Month 2009 / 02

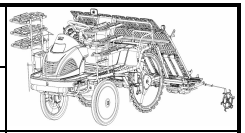

FIG.	NO.	부품번호	품명	PART NAME	수량	규격	비고	메모
532	01	20085320010	배터리	BATTERY	1			
532	02	20085321100A	배터리고무 COMP	FIX BATTERY COMP	1			
532	03	20082110041	플레이트	PLATE	1			
532	04	34522832000	탈곡스위치ASSY	SWITCH ASSY , THRESHING	1			
532	05	V1222604030	십자홈냄비작은나사(SP)	SCREW , C/R PAN/SP	2	M4x30(SP)		
532	06	V3802600040	플랜지붙이육각너트	NUT , HEX FLANGE	2	M4		
532	07	V2183608020	소형육각볼트보통(SP)	BOLT , HEX/SP	2	M8x20(SP)		
532	08	20085320030A	코드(접지)	CORD , EARTH	1			
532	09	20085320060A	코드(+)	CORD , (+)	1			

NOTE	

582	묘탑재대	PD60	Year / Month 2009 / 02	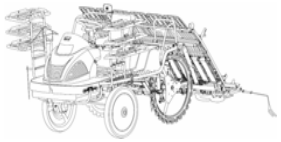

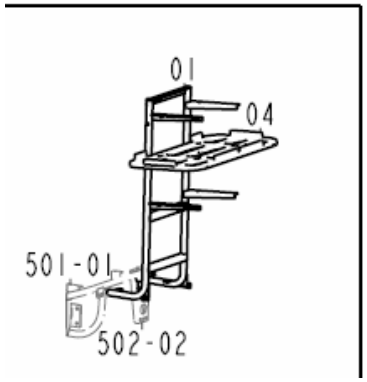

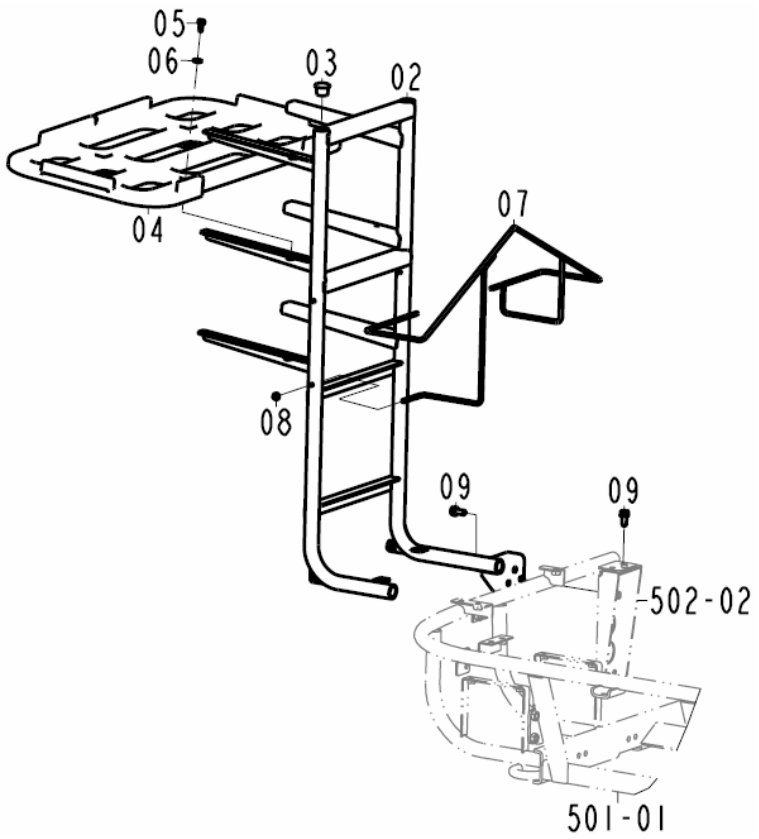

NOTE	

PDF Complete
Your complimentary use period has ended. Thank you for using PDF Complete.
Click Here to upgrade to Unlimited Pages and Expanded Features

582	묘탑재대	PD60	Year / Month 2009 / 02

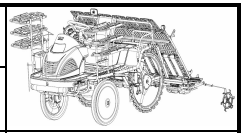

FIG.	NO.	부품번호	품명	PART NAME	수량	규격	비고	메모
582	01	20085822101	프레임지지(좌) COMP	SUPPORT COMP , LH/FRAME	1			
582	02	20085822201	프레임지지(우) COMP	SUPPORT COMP , RH/FRAME	1			
582	03	20085820040	묘탑재대캡	CAP , FRAME/SEEDLING	4			
582	04	20085820010	예비묘탑재대	TRAY , SEEDLING	6			
582	05	V2113606016	육각볼트(S)	BOLT , HEX /S	12	M6x16(S)		
582	06	35605033020	와이어인출용와셔	WASHER , WIRE WITHDRAWAL	12			
582	07	20085822902A	묘취판보관대 COMP	FRAME COMP , CATCHING PLATE	1			
582	08	V3802600050	플랜지붙이육각너트	NUT , HEX/FLANGE	3	M5		
582	09	V2173608020	소형육각볼트보통(S)	BOLT , HEX/S	12	M8x20(S)		

NOTE	

583	백밀러	PD60	Year / Month 2009 / 02	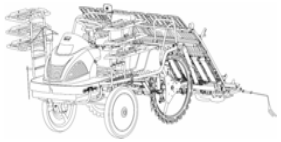

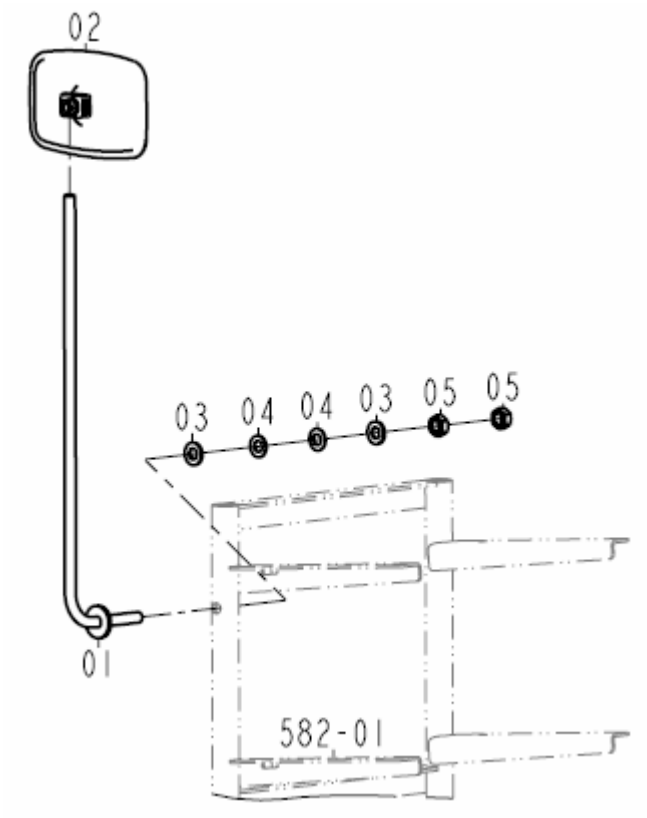

NOTE	

PDF Complete
Your complimentary use period has ended. Thank you for using PDF Complete.
Click Here to upgrade to Unlimited Pages and Expanded Features

583	백밀러	PD60	Year / Month 2009 / 02

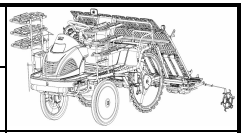

FIG.	NO.	부품번호	품명	PART NAME	수량	규격	비고	메모
583	01	20085822700B	백미러지지대 COMP	SUPPORT COMP , MIRROR	1			
583	02	37621742000	백밀러(완)	MIRROR SET	1			
583	03	V4111600100	평와셔	WASHER , PLAIN	2	M10		
583	04	21307130030A	접시스프링	SPRING , CONE	2			
583	05	V3042600100	접시스프링	SPRING , CONE	2	M10		

NOTE	

601	식부연결축	PD60	Year / Month 2009 / 02	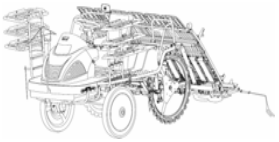

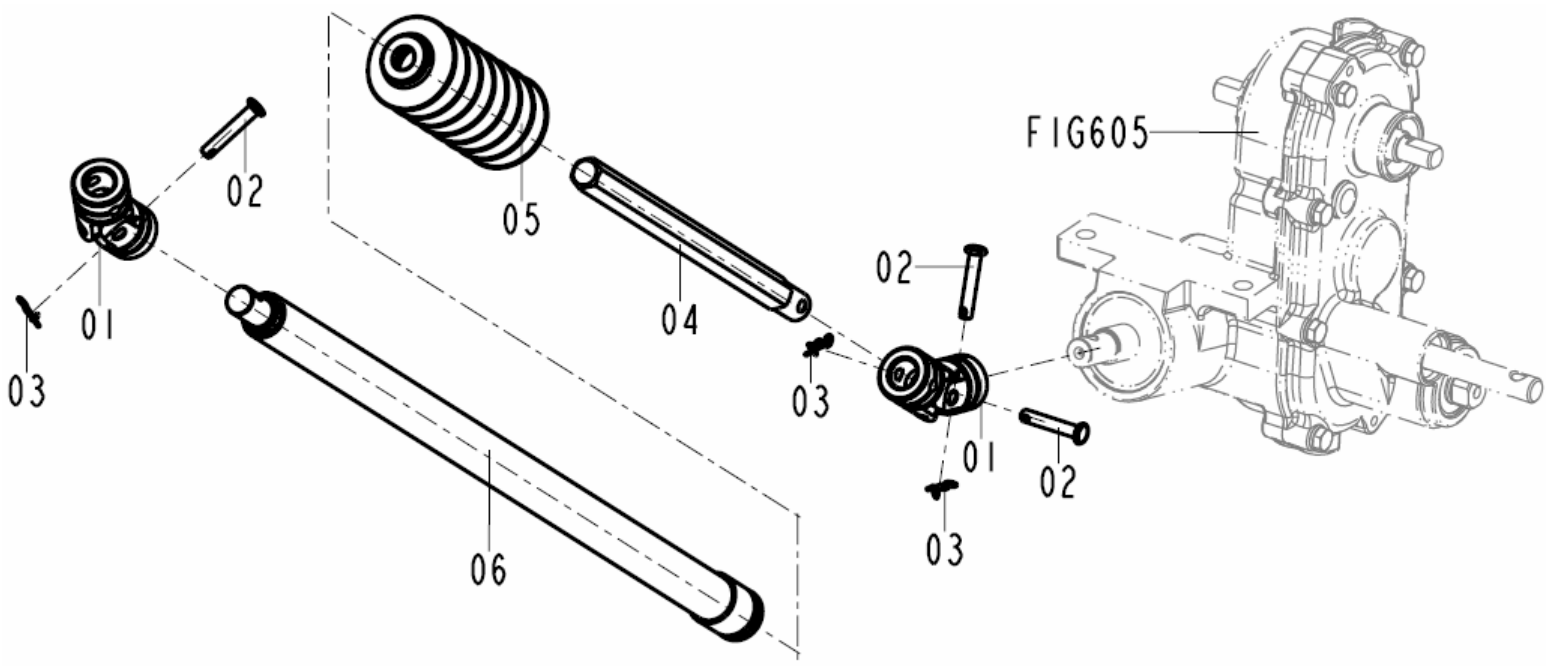

NOTE

PDF Complete
Your complimentary use period has ended. Thank you for using PDF Complete.
Click Here to upgrade to Unlimited Pages and Expanded Features

601	식부연결축	PD60	Year / Month 2009 / 02

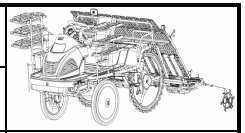

FIG.	NO.	부품번호	품명	PART NAME	수량	규격	비고	메모
601	01	21444192201D	유니버셜 조인트 완성	JOINT ASSY , UNIVERSAL	1			
601	02	21444190201B	핀(06X29)	PIN , 06X29	3	6x29		
601	03	21306010180	헤어핀(6)	PIN , SNAP(6)	3			
601	04	21444190132G	식부뒷축	SHAFT , RR PLANTING	1			
601	05	21454200010	식부샤프트부츠	BOOT , PLANTING SHAFT	1			
601	06	20086012300A	식부구동축(후) COMP	SHAFT COMP , RR/PLANTING	1			

NOTE	

603	식부부 기어박스	PD60	Year / Month 2009 / 02	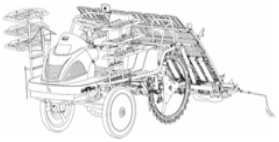

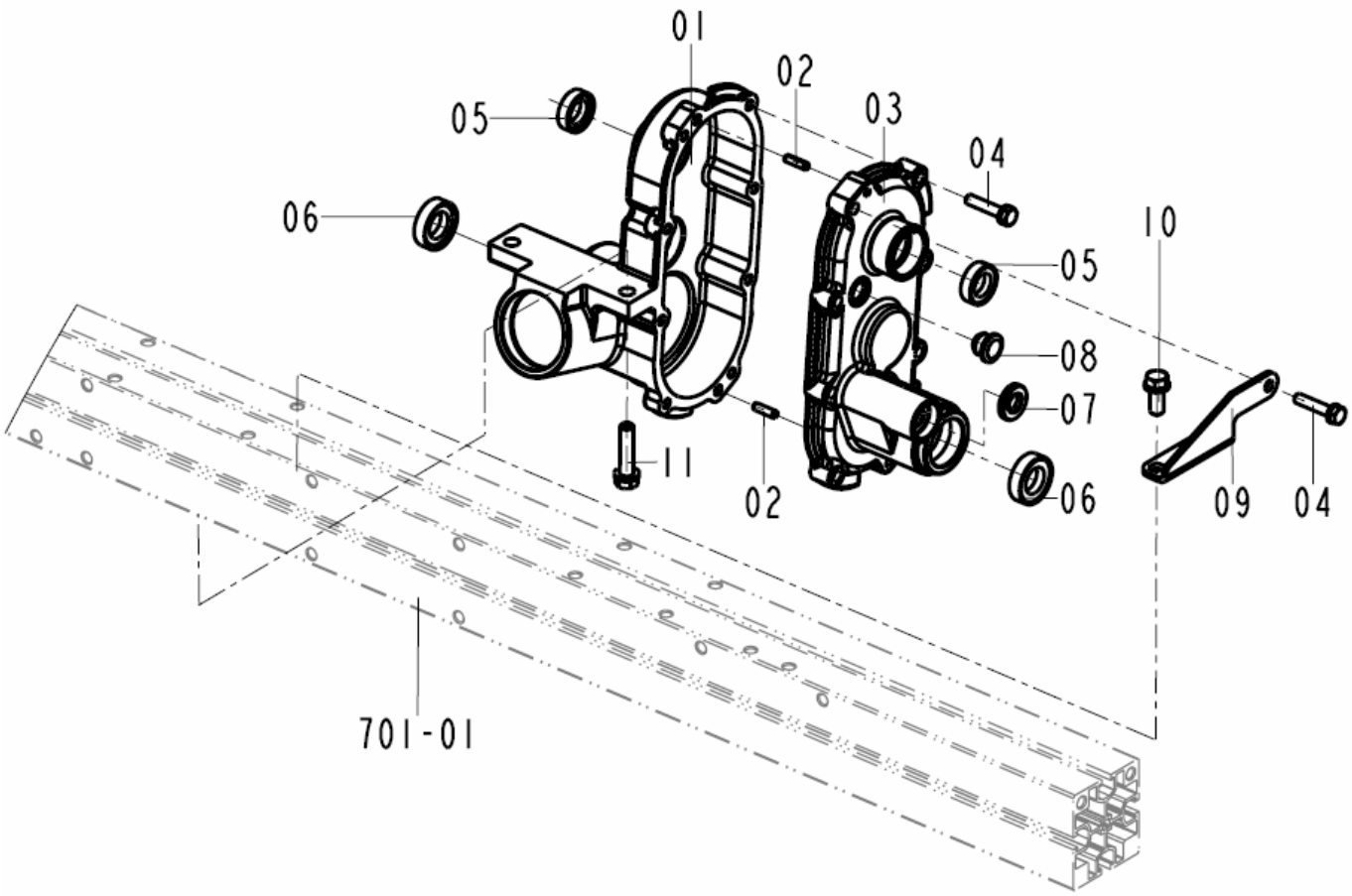

NOTE	

PDF Complete
Your complimentary use period has ended. Thank you for using PDF Complete.
Click Here to upgrade to Unlimited Pages and Expanded Features

603	식부부 기어박스	PD60	Year / Month 2009 / 02

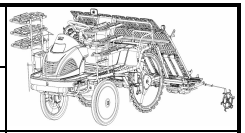

FIG.	NO.	부품번호	품명	PART NAME	수량	규격	비고	메모
603	01	20086030010D	식부미션	CASE , TRANMISSION/PLANTING	1			
603	02	V5801404520	스프링핀	PIN , SPRING	2	4.5x20		
603	03	20086030020B	식부미션커버	COVER , TRANMISSION/PLANTING	1			
603	04	V2113606030	육각볼트(S)	BOLT , HEX /S	8	M6x30(S)		
603	05	V7441152507	오일실(D)	SEAL , OIL/D	2	152507		
603	06	V7441173006	오일실(D)	SEAL , OIL/D	2	173006		
603	07	21457510030A	오일실(TC122204)	SEAL , OIL(TC122204)	1	122204		
603	08	27041020091	사이드프레임주유플러그	PLUG , SIDE FRAME	1			
603	09	20086030030	보강판	PLATE , L	1			
603	10	V2173608016	소형육각볼트보통(S)	BOLT , HEX/S	2	M8x16(S)		
603	11	V2173608030	소형육각볼트(보통)	BOLT , HEX	2	M8x30(S)		

NOTE	

605	식부기어(1)	PD60	Year / Month 2009 / 02	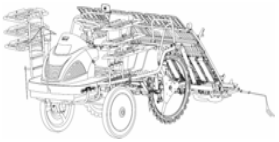

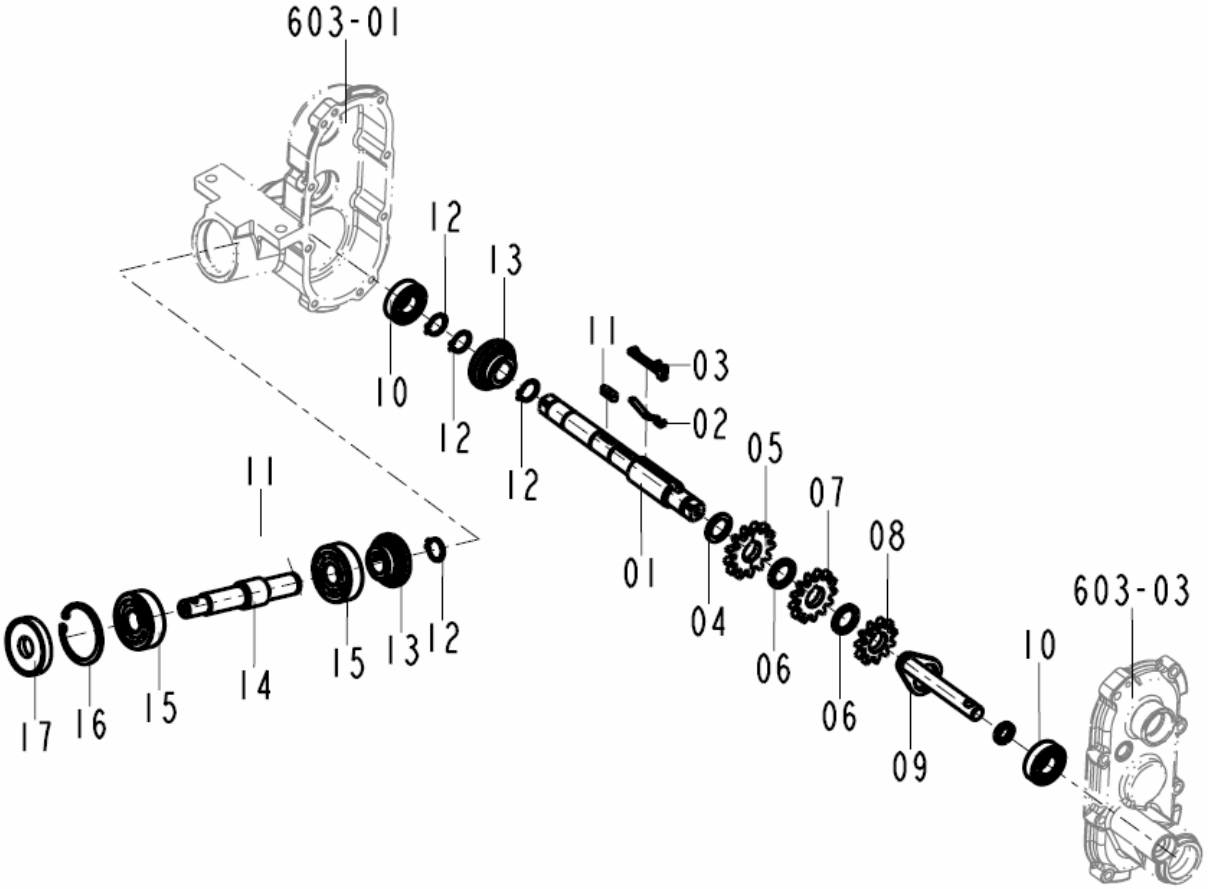

NOTE

PDF Complete
Your complimentary use period has ended. Thank you for using PDF Complete.
Click Here to upgrade to Unlimited Pages and Expanded Features

605	식부기어 (1)	PD60	Year / Month 2009 / 02

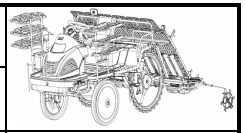

FIG.	NO.	부품번호	품명	PART NAME	수량	규격	비고	메모
605	01	20086050012B	횡이송변속축	SHAFT , CHANGE/CROSS FEED	1			
605	02	20086050090A	판스프링	SPRING, PLATE	1			
605	03	20086050051	횡이송키	KEY , CROSS FEED	1			
605	04	20086050070B	와셔(17X24X2)	WASHER , 17X25X2	1	17X24X3		
605	05	20086050030	기어(중/13)	GEAR , CTR/13	1			
605	06	20086050060B	와셔(17X25X3)	WASHER , 17X25X3	2	17X25X3		
605	07	20086050042	기어(좌/13)	GEAR , LH/13	1			
605	08	20086050020	기어(우/11)	GEAR , RH/11	1			
605	09	20086092100B	횡이송시프터 COMP	SHIFTER COMP , CROSS FEED	1			
605	10	V6001106003	볼베어링	BEARING , BALL	2	6003		
605	11	37502510230	반전 구동축 키	KEY	2			
605	12	V7041400170	C형멈춤링(축용)	C-RING , SHAFT	4	17		
605	13	21446040020B	베벨기어(15)	GEAR , BEVEL/15	2			
605	14	20086040010B	식부입력축	SHAFT , INPUT/PLANTING	1			
605	15	V6001106303	볼베어링	BEARING , BALL	2	6303		
605	16	V7051400470	C형멈춤링(구멍용)	C-RING , HOLE	1	47		
605	17	2144604003A	오일실(TC17477)	SEAL , OIL(TC17477)	1	174707		

NOTE	

606	식부기어(2)	PD60	Year / Month 2009 / 02	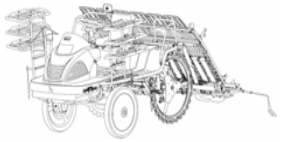

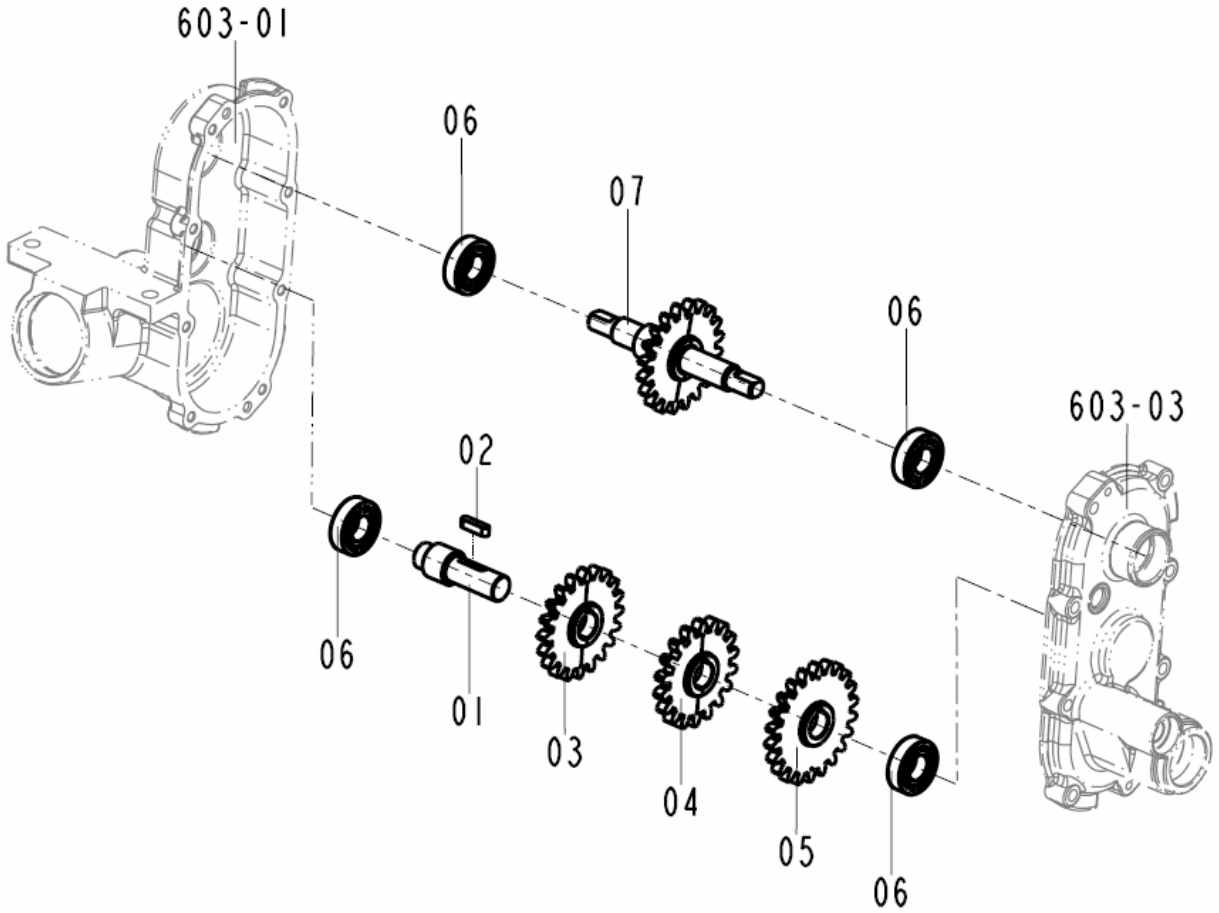

NOTE	

PDF Complete
Your complimentary use period has ended. Thank you for using PDF Complete.
Click Here to upgrade to Unlimited Pages and Expanded Features

606	식부기어 (2)	PD60	Year / Month 2009 / 02

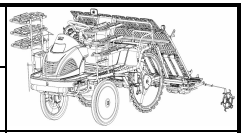

FIG.	NO.	부품번호	품명	PART NAME	수량	규격	비고	메모
606	01	20086060010	카운터축	SHAFT , COUNTER	1			
606	02	13262170030	클러치브라켓트키이	BRACKET KEY , CLUTCH	1			
606	03	20086060030A	기어(중/20)	GEAR , CTR/20	1			
606	04	20086060041	기어(좌/16)	GEAR , LH/16	1			
606	05	20086060020A	기어(우/22)	GEAR , RH/22	1			
606	06	V6001106002	볼베어링	BEARING , BALL	4	6002		
606	07	20086072111B	리드캠구동축	SHAFT , OUT/CROSS FEED	1			

NOTE	

608	이송캠	PD60	Year / Month 2009 / 02	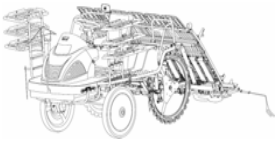

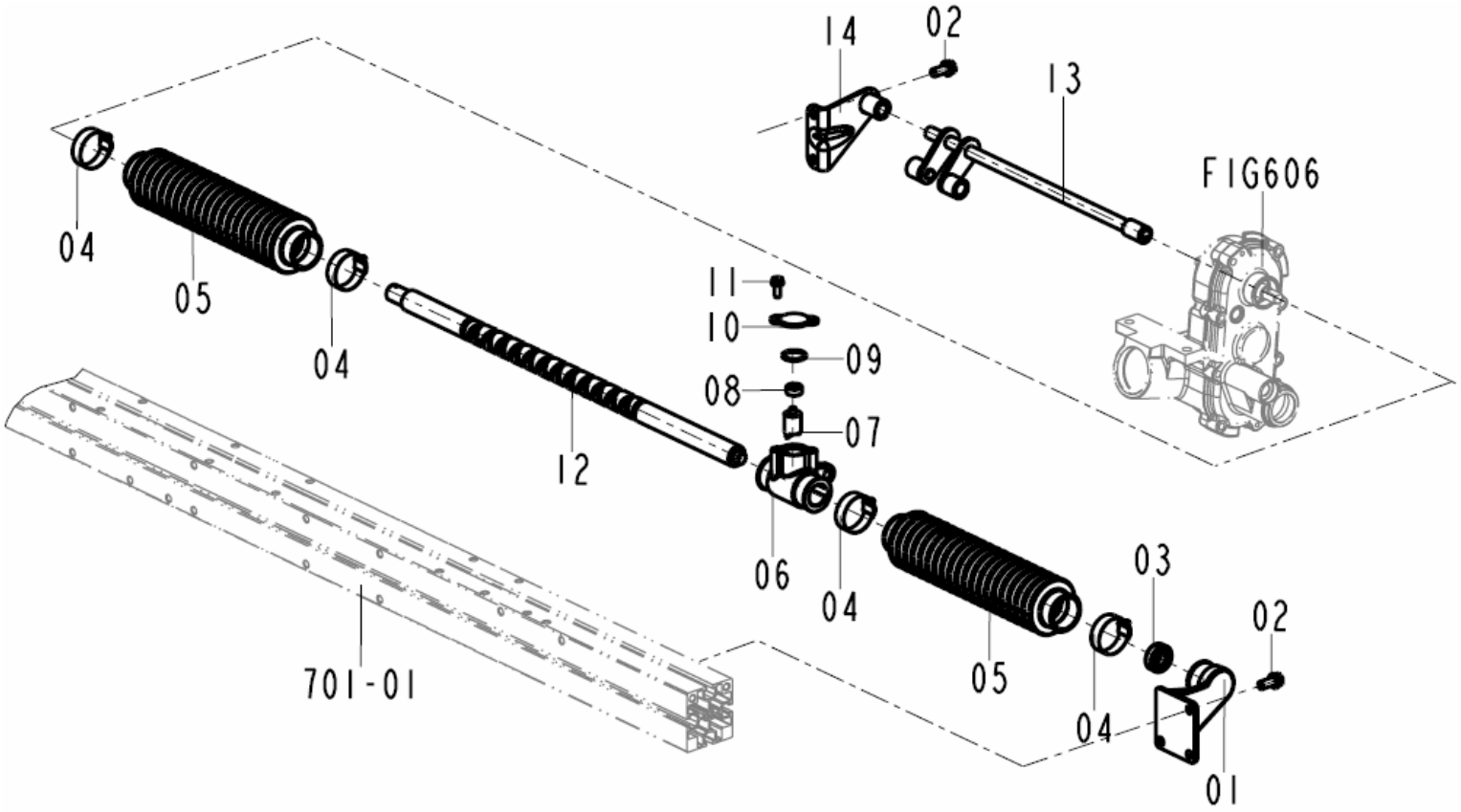

NOTE

PDF Complete
Your complimentary use period has ended. Thank you for using PDF Complete.
Click Here to upgrade to Unlimited Pages and Expanded Features

608	이송캠	PD60	Year / Month 2009 / 02

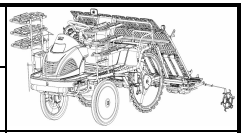

FIG.	NO.	부품번호	품명	PART NAME	수량	규격	비고	메모
608	01	20086080050A	횡이송베어링하우징	HOUSING , BEARING/CROSS FEED	1			
608	02	V2173608020	소형육각볼트보통(S)	BOLT , HEX/S	5	M8x20(S)		
608	03	V6001106001	볼베어링	BEARING , BALL	1	6001		
608	04	20086080070	클램프	BAND , CLAMP	4			
608	05	20086080060	횡이송부츠	BOOTS , CROSS FEED	2			
608	06	20086080021	횡이송메탈	METAL , CROSS FEED	1			
608	07	27063010300D	리드집게	CAM , GUIDE	1			
608	08	20086080030	간격통	COLLAR	1			
608	09	V7201024020	O링(G)	O-RING , G	1	G20		
608	10	20086080080	리드집게고정판	PLATE	1			
608	11	V2113606016	소형육각볼트보통(S)	BOLT , HEX/S	2	M6x16(S)		
608	12	20086082400B	횡이송캠 COMP	CAM COMP , CROSS FEED	1			
608	13	20086082203	종이송캠축	SHAFT , CARRYNG	1			
608	14	20086082300D	종이송캠축스테이 COMP	STAY COMP , SHAFT/CARRYING	1			

NOTE	

609	횡이송체인지레버	PD60	Year / Month 2009 / 02	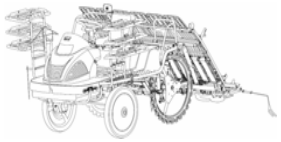

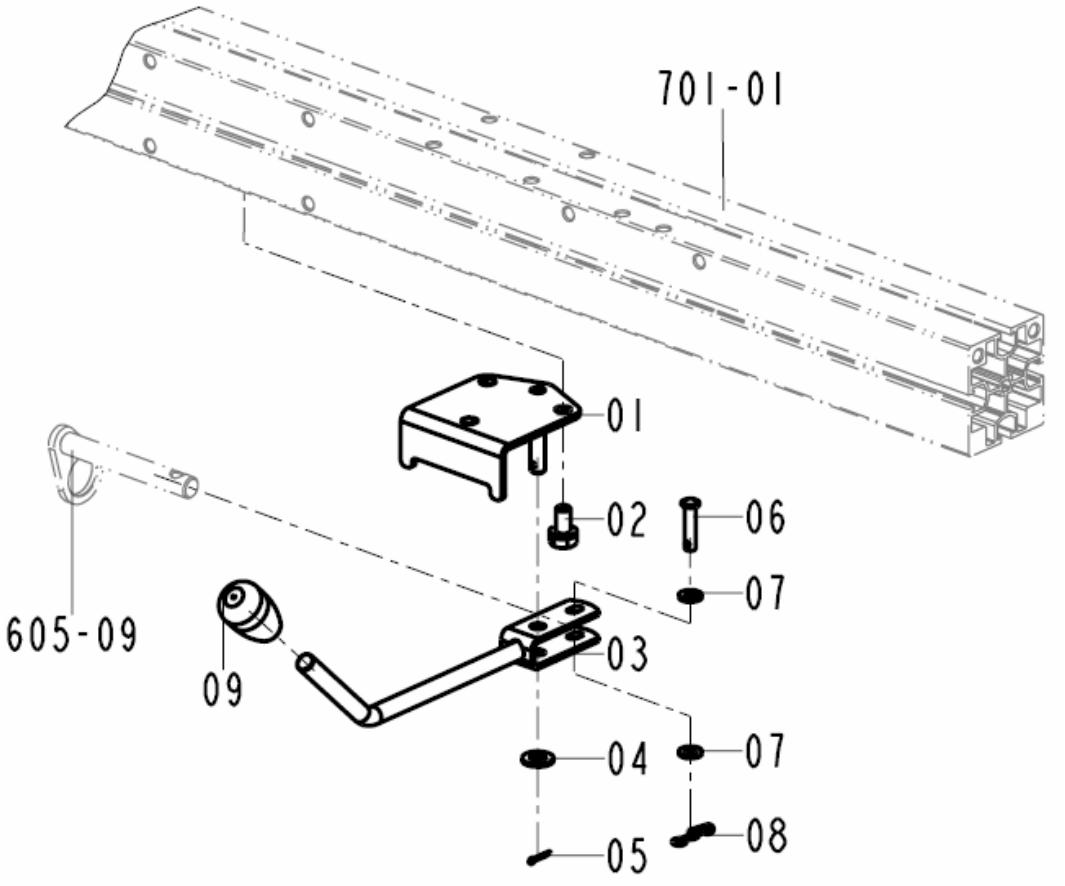

NOTE	

PDF Complete
Your complimentary use period has ended. Thank you for using PDF Complete.
Click Here to upgrade to Unlimited Pages and Expanded Features

609	횡이송체인지레버	PD60	Year / Month 2009/ 02

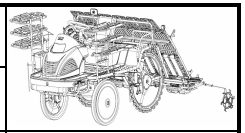

FIG.	NO.	부품번호	품명	PART NAME	수량	규격	비고	메모
609	01	20086092200A	횡이송시프터베이스 COMP	BASE COMP , SHIFTER/CROSS FEED	1			
609	02	v2113608016	육각볼트(S)	BOLT , HEX /S	3			
609	03	20086092300C	횡이송시프터레버 COMP	LEVER COMP , SHIFTER/CROSS FEED	1			
609	04	V4111600080	평와셔	WASHER , PLAIN	1	M8		
609	05	V5001925020	분할핀	PIN , SPLIT	2	2.5X20		
609	06	20086090010	핀(06X22)	PIN , 06X22	1	06x22		
609	07	V4111600060	평와셔	WASHER , PLAIN	2	M6		
609	08	21306010180	销子(6)	헤어핀(6)	1	M6		
609	09	20084220050	감도레버손잡이	GRIP , LEVER/SENSIVITITY	1			

NOTE	

610	연결축	PD60	Year / Month 2009 / 02	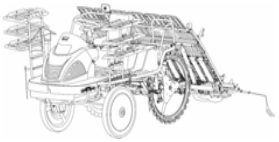

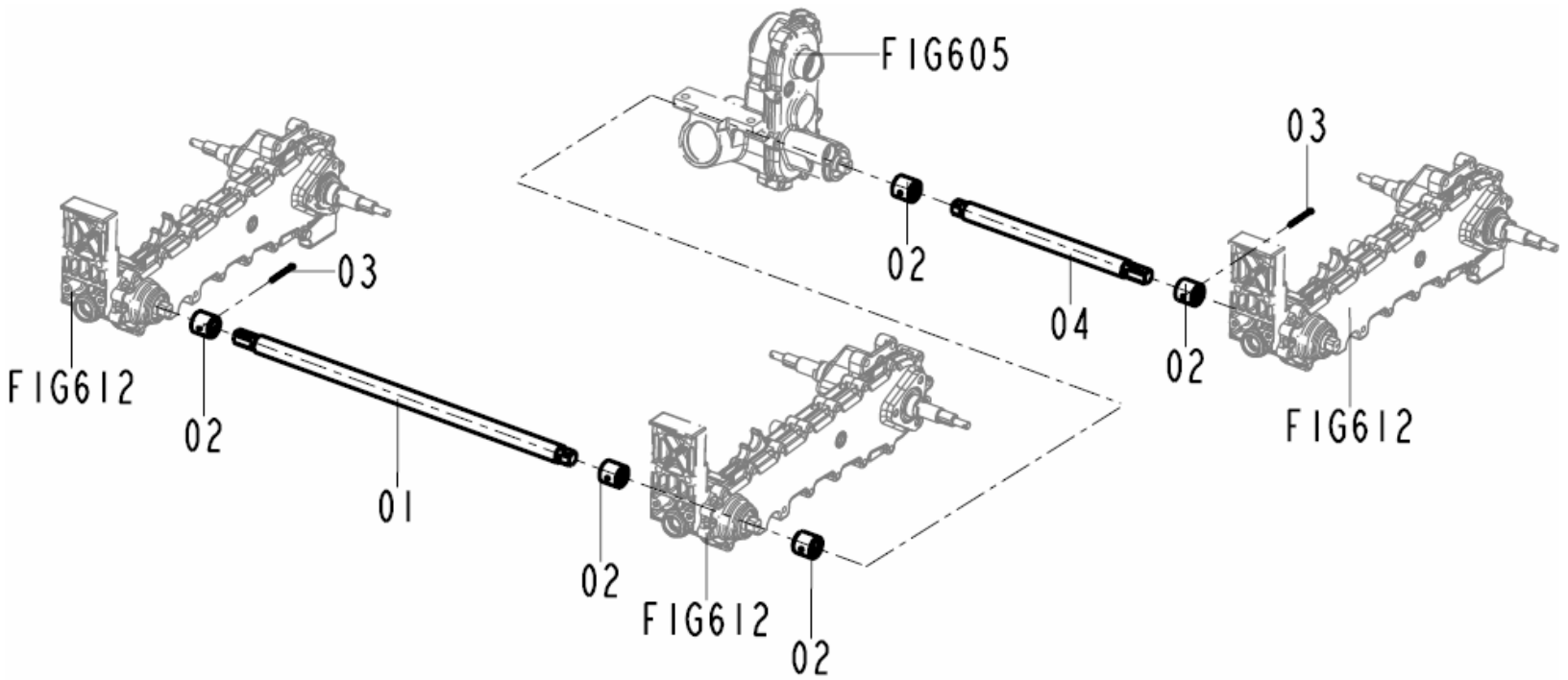

NOTE	

PDF Complete
Your complimentary use period has ended. Thank you for using PDF Complete.
Click Here to upgrade to Unlimited Pages and Expanded Features

610	연결축	PD60	Year / Month 2009 / 02

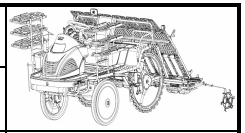

FIG.	NO.	부품번호	품명	PART NAME	수량	규격	비고	메모
610	01	20086102201B	연결축(우) COMP	SHAFT COMP , RH/CONNECTING	1			
610	02	20086100010B	구동커플링	COUPLING , DRIVING	5			
610	03	V5001930035	분할핀	PIN , SPLIT	2	3.0X35		
610	04	20086102100B	연결축(좌) COMP	SHAFT COMP , LH/CONNECTING	1			

NOTE	

611	식입간지지케이스	PD60	Year / Month 2009 / 02	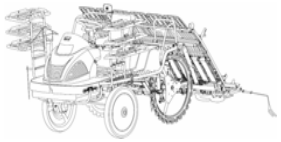

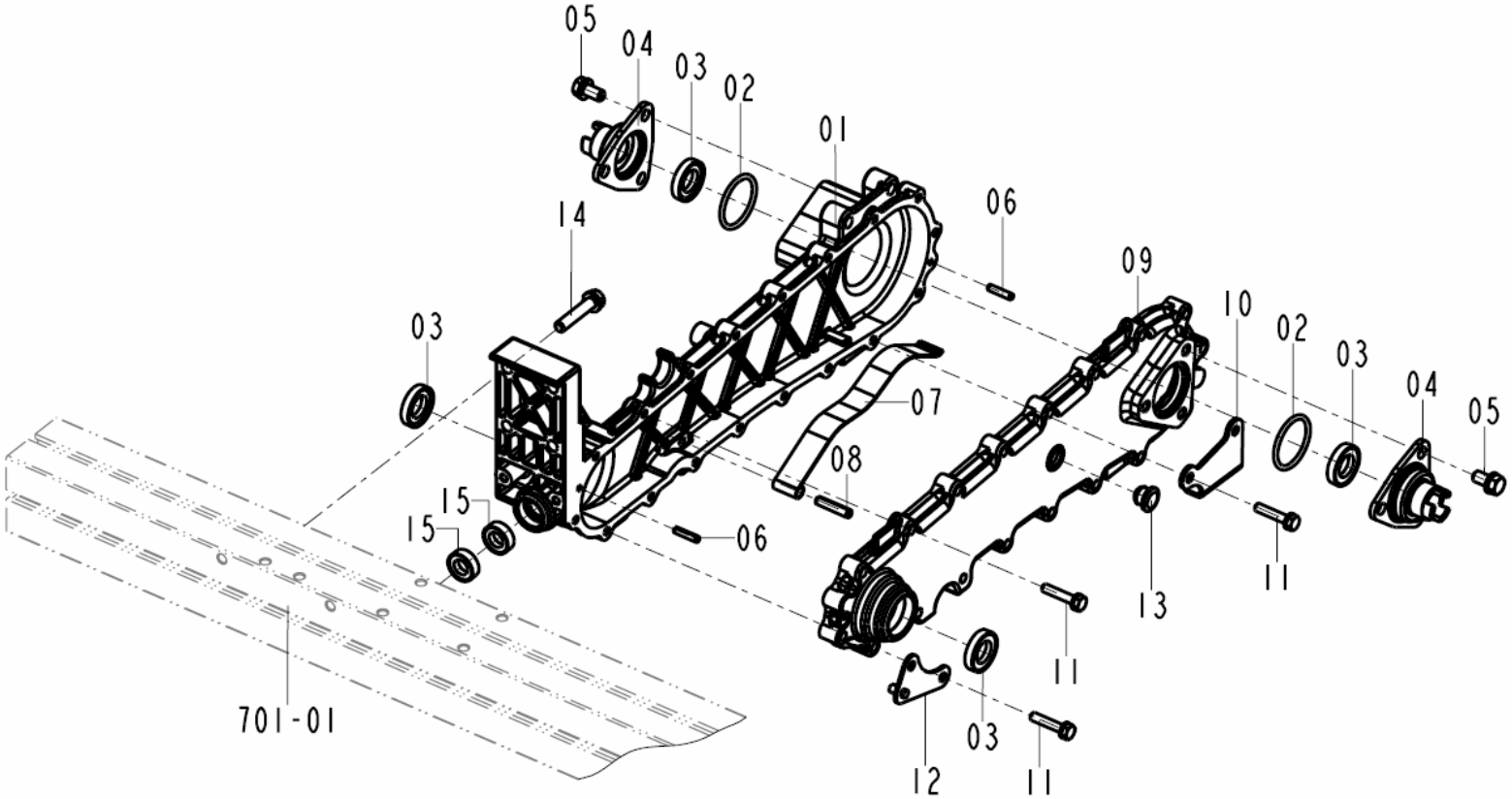

NOTE	

PDF Complete
Your complimentary use period has ended. Thank you for using PDF Complete.
Click Here to upgrade to Unlimited Pages and Expanded Features

611	식입간지지케이스	PD60	Year / Month 2009 / 02

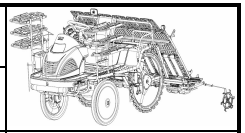

FIG.	NO.	부품번호	품명	PART NAME	수량	규격	비고	메모
611	01	20086110010E	식입간지지케이스	CASE , SUPPORT/ARM	3			
611	02	V7211031035	O링(G)	O-RING , G	6	G35		
611	03	V7441173006	오일실(D)	SEAL , OIL/D	12	173006		
611	04	20086140010D	지지메탈	METAL , SUPPORT	6			
611	05	V2173608016	소형육각볼트보통(S)	BOLT , HEX/S	18	M8x16(S)		
611	06	V5801404520	스프링핀	PIN , SPRING	6	4.5x20		
611	07	V5801406028	스프링핀	PIN , SPRING	3	6.0x28		
611	08	20086110080B	체인가이드	GUIDE , CHAIN	3			
611	09	20086110020B	식입간지지케이스커버	COVER , SUPPORT/ARM	3			
611	10	20087090020	정지판	PLATE	2			
611	11	V2113606030	육각볼트(S)	BOLT , HEX /S	54	M6x30(S)		
611	12	20087172400A	지지플레이트 COMP	PLATE COMP , SUPPORT	2			
611	13	V2173608040	소형육각볼트보통(S)	BOLT , HEX/S	12	M8x40(S)		
611	14	27041020091	사이드프레임주유플러그	PLUG , SIDE FRAME	3			
611	15	21457510030	오일실(TC122204)	SEAL , OIL(TC122204)	6	122204		

NOTE	

612	식입간 구동체인	PD60	Year / Month 2009 / 02	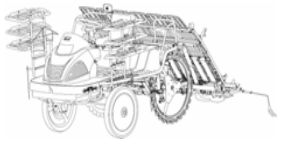

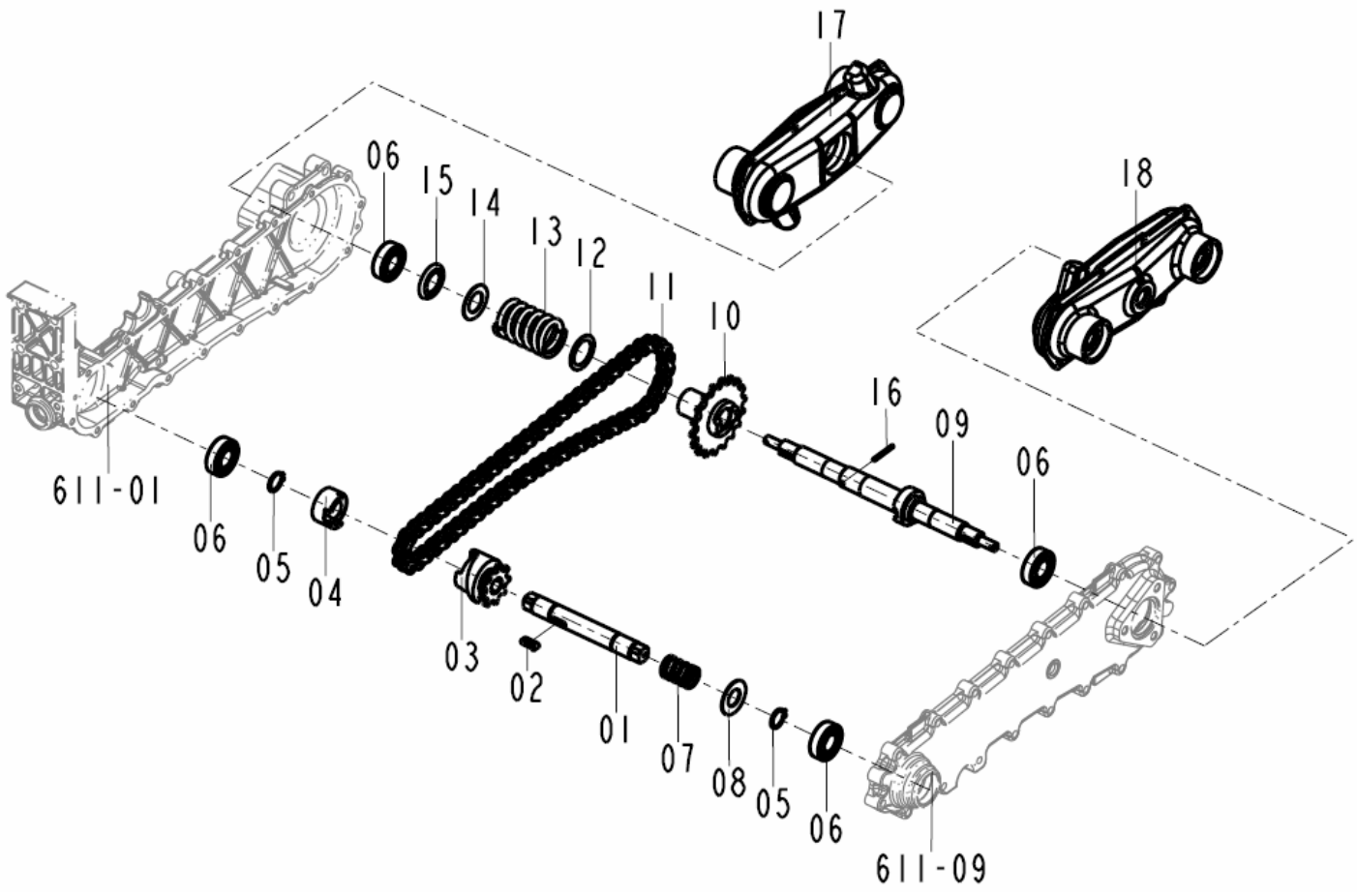

NOTE

PDF Complete
Your complimentary use period has ended. Thank you for using PDF Complete.
Click Here to upgrade to Unlimited Pages and Expanded Features

612	식입간 구동체인	PD60	Year / Month 2009 / 02	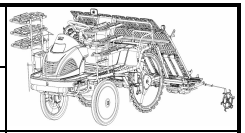

FIG.	NO.	부품번호	품명	PART NAME	수량	규격	비고	메모
612	01	20086120011	각조클러치축	SHAFT , CLUTCH/RESPECTIVE	3			
612	02	21447010041A	키(05X05X18)	KEY , 05X05X18	3	05X05X18		
612	03	21447020022F	식입클러치스프로킷(우)	SPROCKET , RH PLANTING CLUTCH	3			
612	04	21447010031C	식입클러치캠	CAM , PLANTING CLUTCH	3			
612	05	V7041400170	C형멈춤링(축용)	C-RING , SHAFT	6	17		
612	06	V6001106003	볼베어링	BEARING , BALL	6	6003		
612	07	20086120020A	스프링(HC030)	SPRING , HC030	3	HC030		
612	08	21307322050	식입간축 와셔	WASHER , PLANTING SHAFT	3			
612	09	21557032101	식입간축(K)조합	SHAFT COMP , PLANTING ARM(K)	3			
612	10	20086132100	스프로킷(18) COMP	SPROCKET COMP , 18	3			
612	11	20086110030A	체인(066)	CHAIN , 066	3			
612	12	20086130010	와셔(25X34X01)	WASHER, 25X34X01	3	25X34X01		
612	13	20086130020A	스프링(HC057)	SPRING,SAFETY CLUTCH HC057	3	HC057		
612	14	21466130011	와셔(20X34X01)	WASHER , 20X34X01	3	20X34X01		
612	15	20086130030	와셔(20X31X02)	WASHER, 20X31X2	3	20X31X02		
612	16	21427280020	핀(03X28)	PIN , 03X28	3	03X28		
612	17	21567392001	로타리식입간(99/우)세트	ARM ASSY , RH/PLANTING	3			
612	18	21567382001	로타리식입간(99/좌)세트	ARM ASSY , LH/PLANTING	3			

NOTE	

615	각조클러치	PD60	Year / Month 2009 / 02	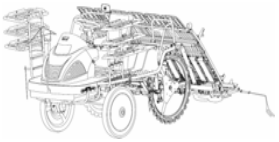

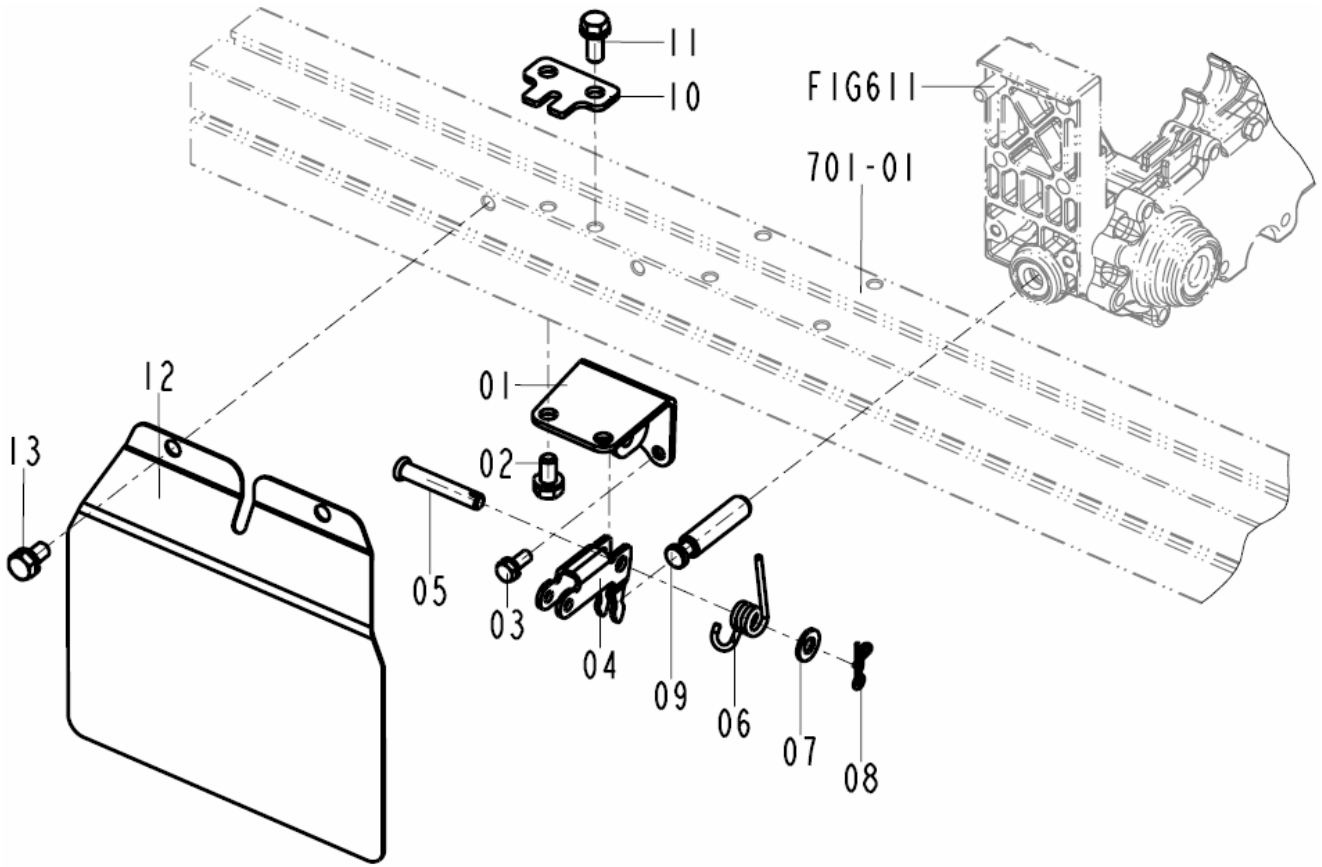

NOTE	

PDF Complete
Your complimentary use period has ended. Thank you for using PDF Complete.
Click Here to upgrade to Unlimited Pages and Expanded Features

615	각조클러치	PD60	Year / Month 2009 / 02

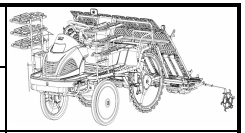

FIG.	NO.	부품번호	품명	PART NAME	수량	규격	비고	메모
615	01	20086152100C	클러치베이스 COMP	BASE COMP , CLUTCH	1			
615	02	v2113608016	육각볼트(S)	BOLT , HEX /S	2	M8x16(S)		
615	03	V2113606016	육각볼트(S)	BOLT , HEX /S	2	M6x16(S)		
615	04	20086150030C	클러치포크	FORK , CLUTCH	1			
615	05	27231030010	바퀴고정핀 (4)	PIN , WHEEL/4	1			
615	06	2008615004C	스프링(HC)	SPRING , HC	1			
615	07	V4111600080	평와셔	WASHER , PLAIN	1	M8		
615	08	39081700200	헤어핀 (8)	PIN , SNAP/8	1			
615	09	20086150050D	각조클러치핀	PIN , CLUTCH/RESPECTIVE	1			
615	10	20086150080C	케이블받침	PLATE , CABLE/RESPECTIVE	1			
615	11	v2173608020	소형육각볼트보통(S)	BOLT , HEX/S	2	M8x20(S)		
615	12	20087170040	흙막이판	PROTECTOR , MUD	2			
615	13	V2173608016	소형육각볼트보통(S)	BOLT , HEX/S	4	M8x16(S)		

NOTE	

701	식부연결히치	PD60	Year / Month 2009 / 02	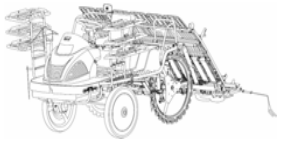

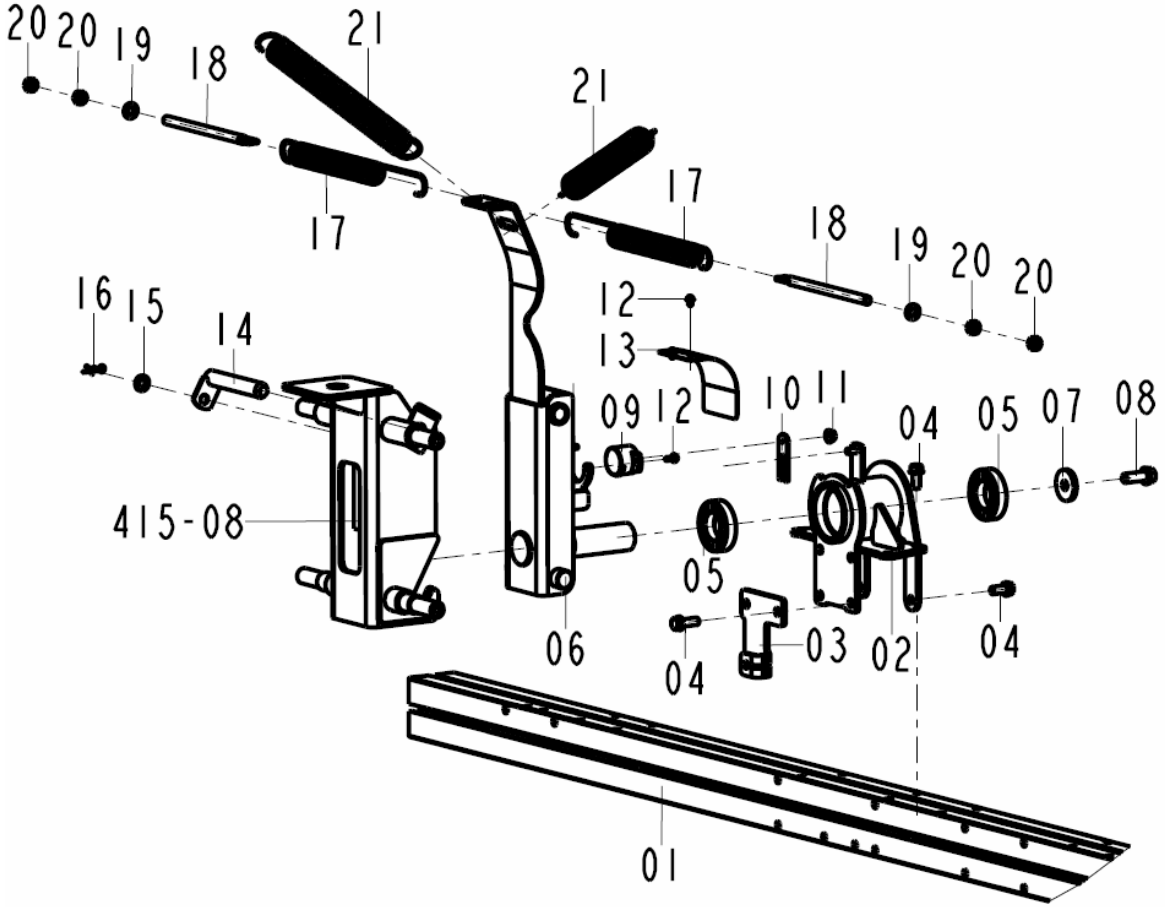

NOTE

PDF Complete
Your complimentary use period has ended. Thank you for using PDF Complete.
Click Here to upgrade to Unlimited Pages and Expanded Features

701	식부연결히치	PD60	Year / Month 2009 / 02

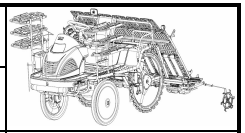

FIG.	NO.	부품번호	품명	PART NAME	수량	규격	비고	메모
701	01	20087010012B	식부부메인프레임	FRAME , MAIN/PLANTING	1			
701	02	20087012203	롤링축지지 COMP	SUPPORT COMP , SHAFT/ROLLING	1			
701	03	20086150070A	클러치베이스(중)	BASE , CTR/CLUTCH	1			
701	04	2173608020	소형육각볼트보통(S)	BOLT , HEX/S	8	M8X20(S)		
701	05	V6001106006	볼베어링	BEARING , BALL	2	6006		
701	06	20087012102C	히치 COMP	HITCH COMP	1			
701	07	37613420080	협액대 잠김 와셔	WASHER , HOLDER	1			
701	08	V2173610030	소형육각볼트보통(S)	BOLT , HEX/S	1	M10X30(S)		
701	09	20084200020	포텐셔메터	POTENTIOMETER	1			
701	10	20085260030	포텐셔메터암	ARM , POTENTIOMETER	1			
701	11	V3802600060	플랜지붙이육각너트	NUT , HEX FLANGE	1	M6		
701	12	V1122604016	십자홈접시작은나사(SP)	SCREW , C/R FLAT(SP)	4	M4x12(SP)		
701	13	20087010051	보호판	PLATE	1			
701	14	20087012300A	히치핀 COMP	PIN COMP , HITCH	1			
701	15	V4111600080	평와셔	WASHER , PLAIN	1	M8		
701	16	39081700200	헤어핀 (8)	PIN , SNAP/8	1			
701	17	20087030030B	스프링(HE)	SPRING , HE	2			
701	18	20087030020	체인 텐션 로드(102)	ROD , CHAIN(TENSION)(102)	2			
701	19	V4111600080	평와셔	WASHER , PLAIN	4	M8		
701	20	V3042600080	소형육각너트보통2종	NUT , HEX/2	4	M8		
701	21	21466400014C	스프링(HE256)	SPRING , HE256	2			

NOTE	

704	묘탱크지지	PD60	Year / Month 2009 / 02	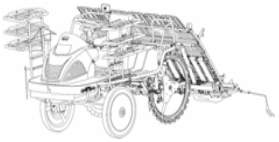

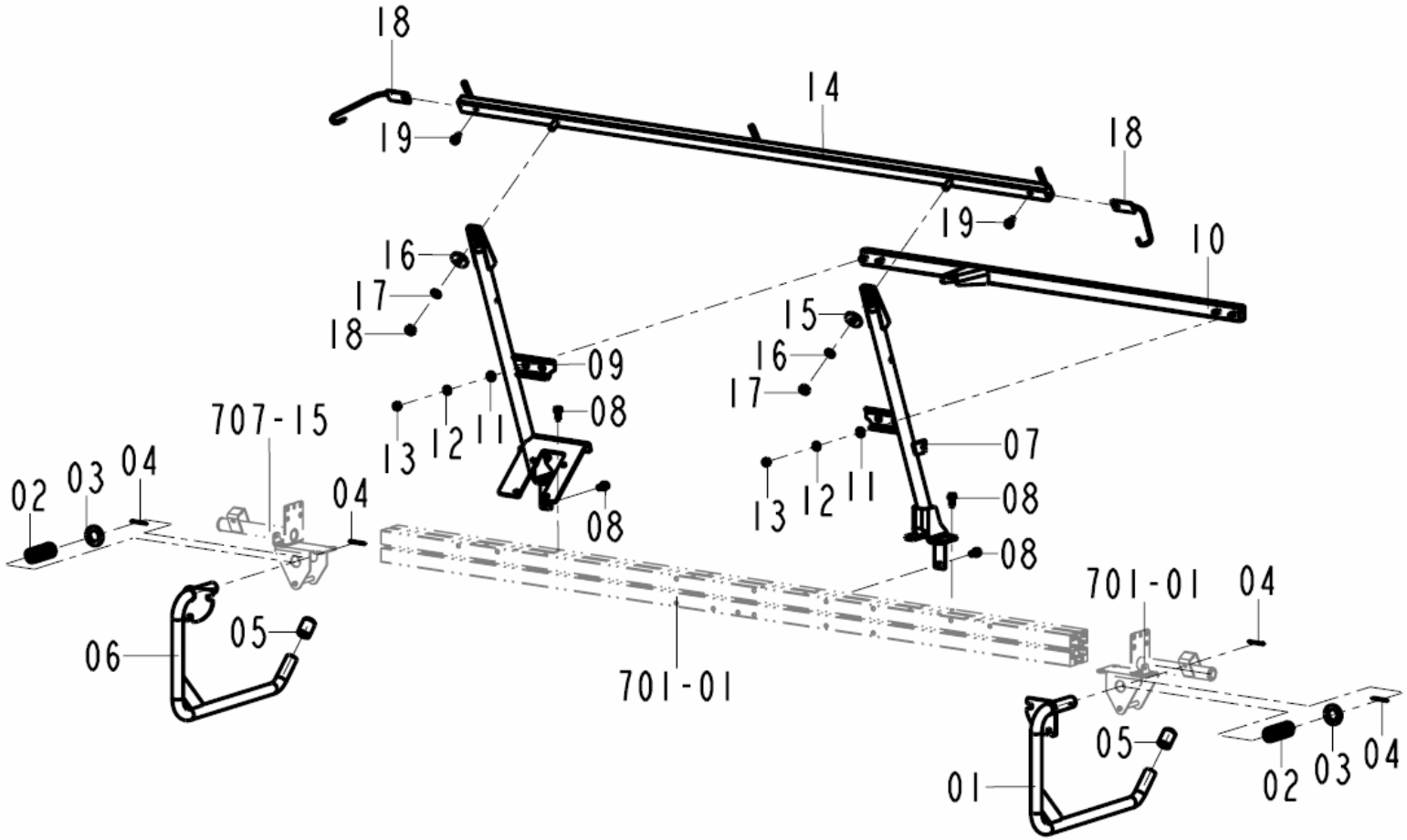

NOTE	

PDF Complete
Your complimentary use period has ended. Thank you for using PDF Complete.
Click Here to upgrade to Unlimited Pages and Expanded Features

704	묘탱크지지	PD60	Year / Month 2009 / 02	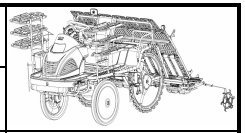

FIG.	NO.	부품번호	품명	PART NAME	수량	규격	비고	메모
704	01	20087092100C	식부받침(좌) COMP	STAND COMP , LH/PALNTING	1			
704	02	20087090010	스프링(HC070)	SPRING , HC070	2			
704	03	V4111600220	평와셔	WASHER , PLAIN	2			
704	04	V5001925030	분할핀	PIN , SPLIT	2	2.5x30		
704	05	20087090040	마개	CAP	2			
704	06	20087092200C	식부받침(우) COMP	STAND COMP , RH/PALNTING	1			
704	07	20087042103	묘탱크지지대(좌) COMP	SUPPORT COMP , LH/BED	1			
704	08	V2173608020	소형육각볼트보통(S)	BOLT , HEX/S	20			
704	09	20087042203A	묘탱크지지대(우) COMP	SUPPORT COMP , RH/BED	1			
704	10	20087042503	롤링지지 COMP	SUPPORT COMP , BED	1			
704	11	V4111600080	평와셔	WASHER , PLAIN	4	M8		
704	12	V4011600080	스프링와셔	WASHER , SPRING	4	M8		
704	13	V3042600080	소형육각너트보통2종	NUT , HEX/2	4	M8		
704	14	20087042301	롤러지지대 COMP	SUPPORT COMP , ROLLER	2			
704	15	V4111600100	평와셔	WASHER , PLAIN	2	M10		
704	16	V4011600100	스프링와셔	WASHER , SPRING	2	M10		
704	17	V3042600100	소형육각너트보통2종	NUT , HEX/2	2	M10		
704	18	20087042400C	마커걸이 COMP	HOOK COMP , MARKER	2			
704	19	V2173608016	소형육각볼트보통(S)	BOLT , HEX/S	2	M8x16(S)		

NOTE	

705	각조클러치레버	PD60	Year / Month 2009 / 02	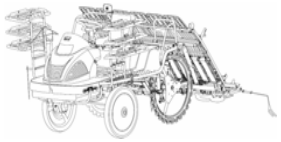

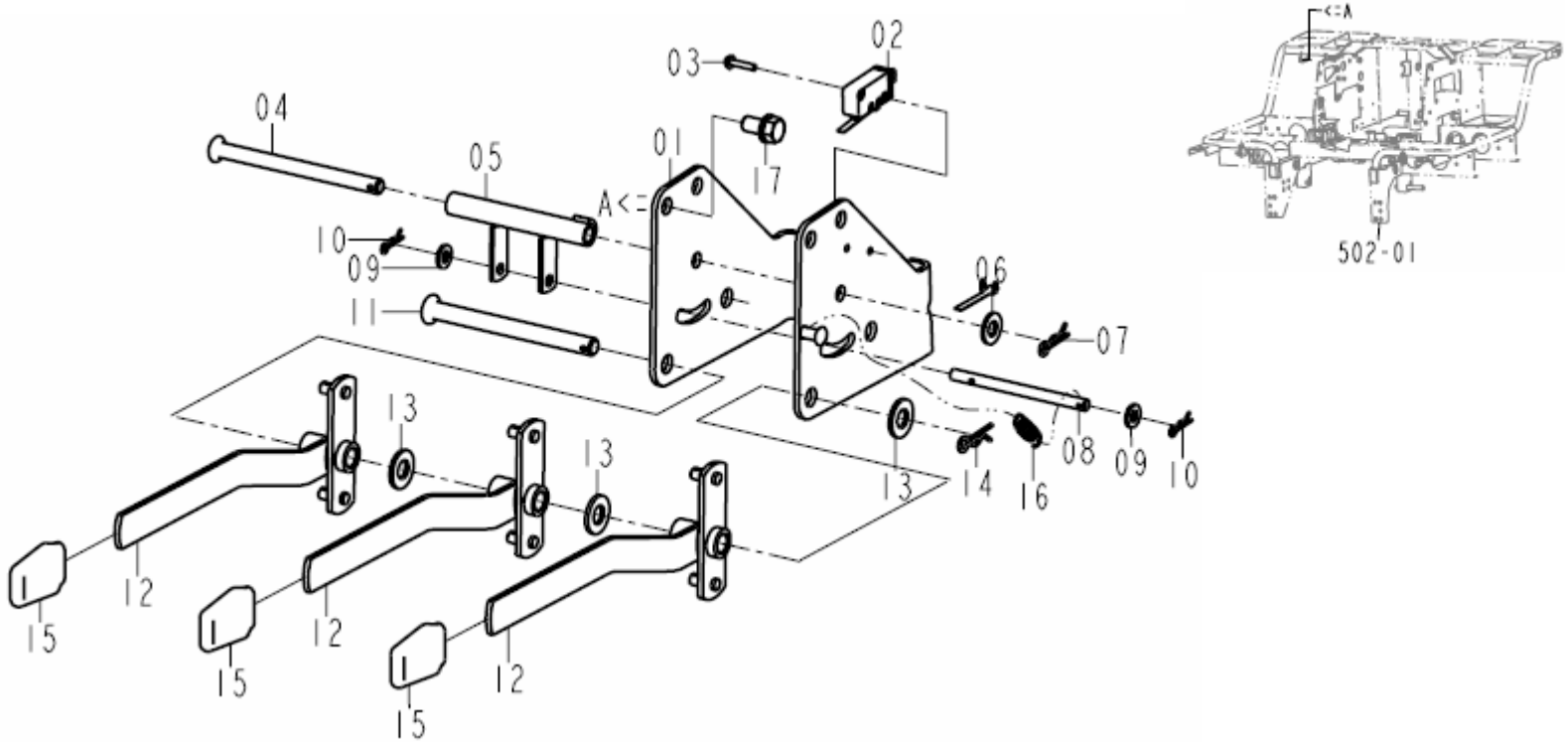

NOTE

PDF Complete
Your complimentary use period has ended. Thank you for using PDF Complete.
Click Here to upgrade to Unlimited Pages and Expanded Features

705	각조클러치레버	PD60	Year / Month 2009 / 02

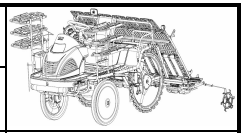

FIG.	NO.	부품번호	품명	PART NAME	수량	규격	비고	메모
705	01	20087052101B	각조클러치레버베이스 COMP	BASE COMP , LEVER	1			
705	02	20085373000	리미트스위치 ASSY	SWITCH ASSY	1			
705	03	V1222603020	십자홈냄비작은나사(SP)	SCREW , C/R PAN/SP	4	M3x20(SP)		
705	04	20087050060	핀(08X98)	PIN , 08X98	1			
705	05	20087052402A	스위치 작동 COMP	CONTROL COMP,SENSING	1			
705	06	V4111000080	평와셔	WASHER , PLAIN	1	M8		
705	07	V5601600008	헤어핀 (8)	PIN , SNAP/8	1	8		
705	08	20087050071	핀(08X98)	PIN , 06X85	1			
705	09	V4111000060	평와셔	WASHER , PLAIN	2	M6		
705	10	V5601600006	헤어핀 (6)	PIN , SNAP/6	2	6		
705	11	20087050050	핀(10X98)	PIN , 10X98	1			
705	12	20087052202	각조클러치레버 COMP	LEVER COMP , CLUTCH/RESPECTIVE	3			
705	13	V4111000100	평와셔	WASHER , PLAIN	3	M10		
705	14	20082100040	헤어핀(D=10)	PIN , SNAP/10	1			
705	15	20084220130	고정레버손잡이	GRIP , STOP	3			
705	16	20087050080	스프링	SPRING	1			
705	17	V2173608016	소형육각볼트보통(S)	BOLT , HEX/S	4	M8x16		

NOTE	

707	줄치기마커	PD60	Year / Month 2009 / 02	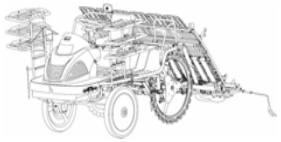

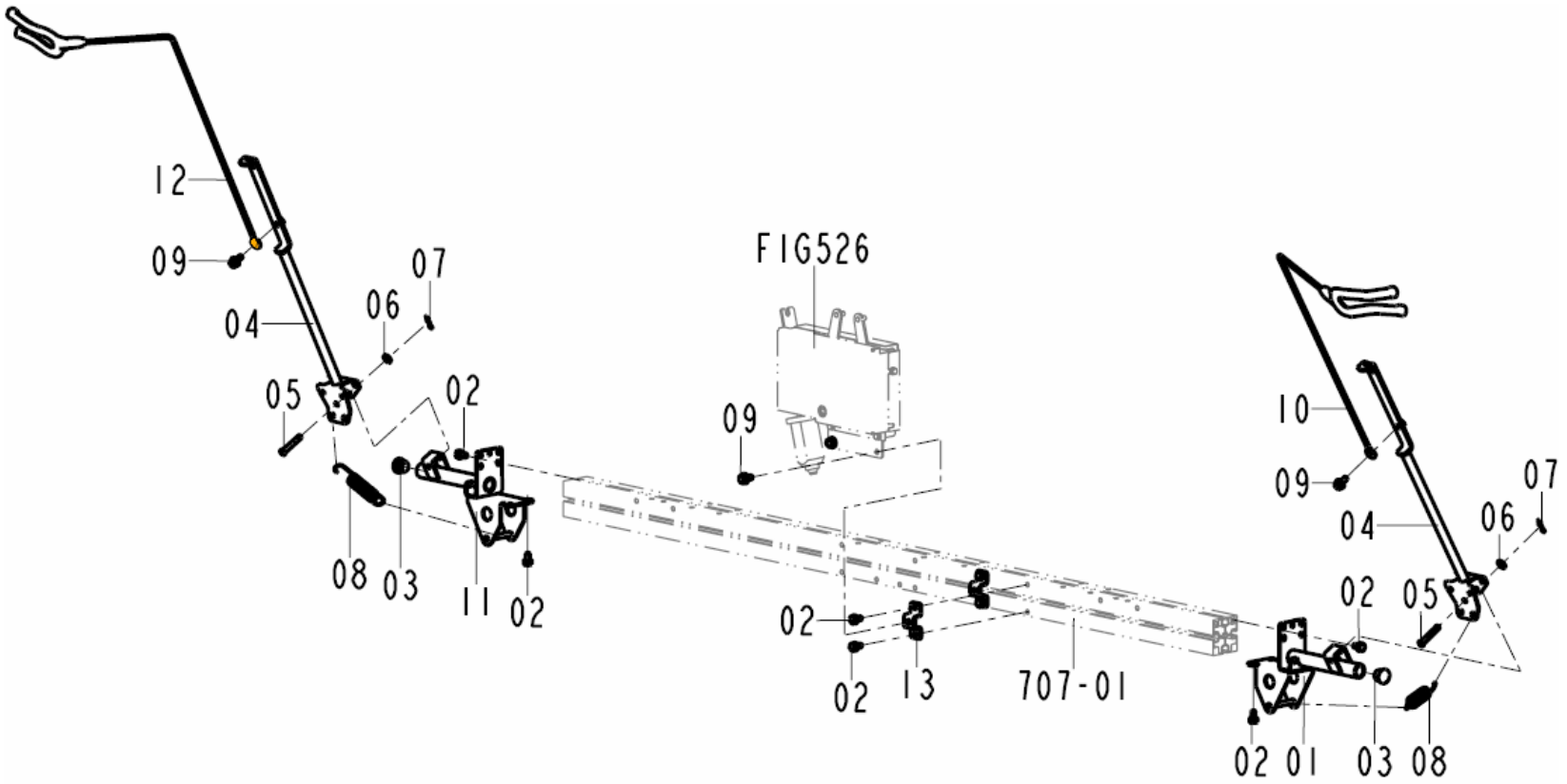

NOTE	

PDF Complete
Your complimentary use period has ended. Thank you for using PDF Complete.
Click Here to upgrade to Unlimited Pages and Expanded Features

707	줄치기마커	PD60	Year / Month 2009/ 02

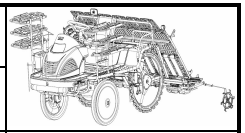

FIG.	NO.	부품번호	품명	PART NAME	수량	규격	비고	메모
707	01	20087072700A	마커베이스(좌) COMP	BASE COMP , LH/MARKER	1			
707	02	V2173608016	소형육각볼트보통(S)	BOLT , HEX/S	14	M8x16(S)		
707	03	20085820040	묘탑재대캡	CAP , FRAME/SEEDLING	2			
707	04	20087072300B	줄치기마커 COMP	MAKER COMP , LINE	2			
707	05	27231030010	바퀴고정핀 (4)	PIN , WHEEL/4	2			
707	06	V4111600080	평와셔	WASHER , PLAIN	2	M8		
707	07	39081700200	헤어핀 (8)	PIN , SNAP/8	2			
707	08	20087070030	스프링(HE120)	SPRING , HE120	2			
707	09	V2173608025	소형육각볼트보통(S)	BOLT , HEX/S	2	M8x25(S)		
707	10	20087073300B	마커(우) COMP	MARKER COMP , RH	1			
707	11	20087072800A	마커베이스(우) COMP	BASE COMP , RH/MARKER	1			
707	12	20087073200B	마커(우) COMP	MARKER COMP , RH	1			

NOTE	

711	이앙깊이조절	PD60	Year / Month 2009 / 02	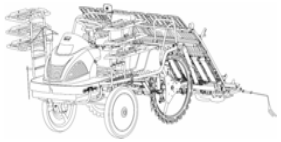

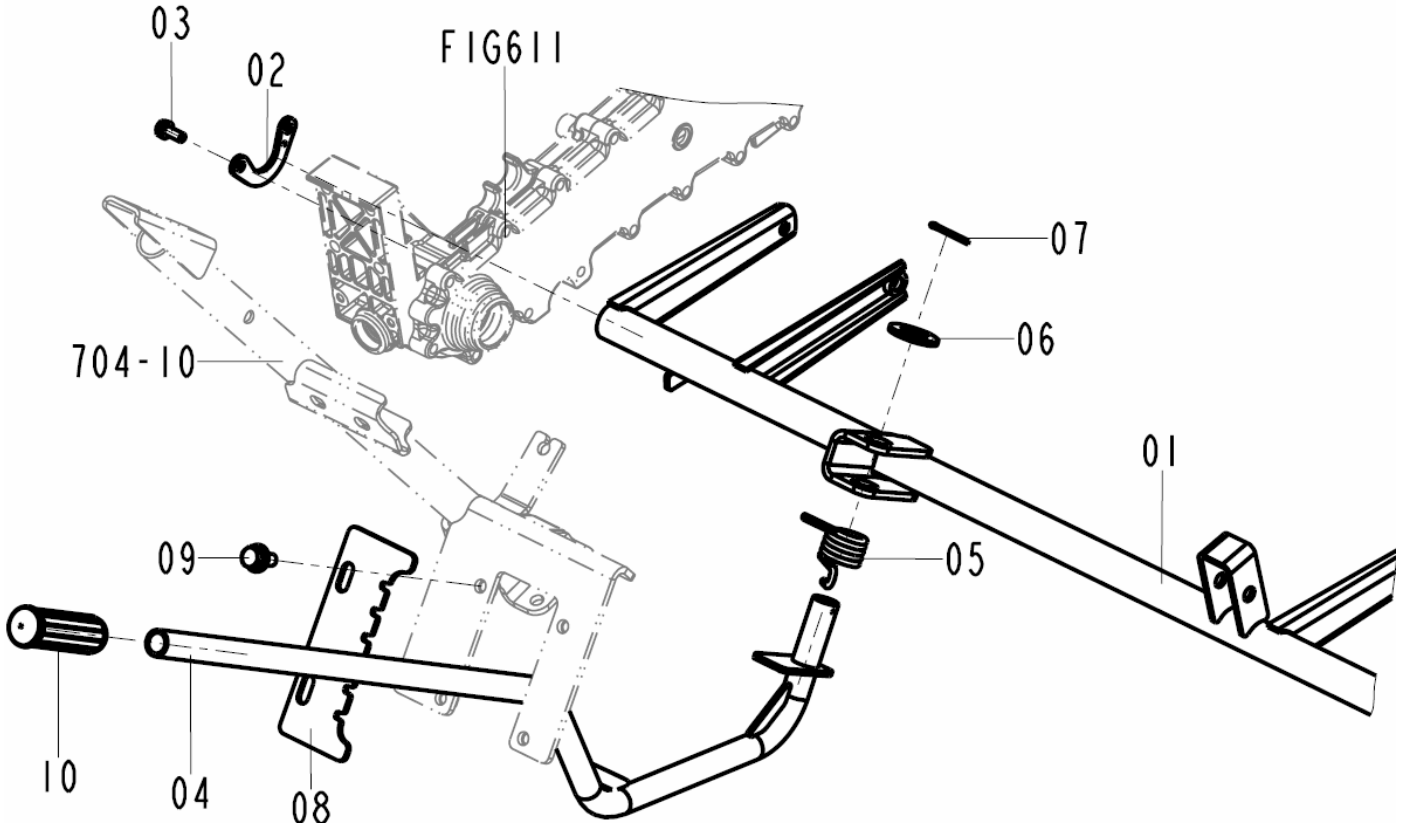

NOTE	

PDF Complete
Your complimentary use period has ended. Thank you for using PDF Complete.
Click Here to upgrade to Unlimited Pages and Expanded Features

711	이앙깊이조절	PD60	Year / Month 2009 / 02

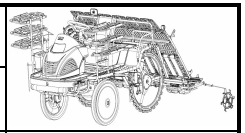

FIG.	NO.	부품번호	품명	PART NAME	수량	규격	비고	메모
711	01	20087112103B	이앙깊이조절프레임 COMP	FRAME COMP , ADJUST/DEPTH	1			
711	02	20087110020B	플로트조절파이프 브라킷	BRACKET , FLOAT ADJUST PIPE	3			
711	03	V2113606012	육각볼트(S)	BOLT , HEX /S	6	M6x12(S)		
711	04	20087112204A	이앙깊이조절레버 COMP	LEVER COMP , ADJUST/DEPTH	1			
711	05	20087110040	스프링(HT)	SPING	1			
711	06	V4111600180	평와셔	WASHER , PLAIN	1	M18		
711	07	V5001930025	분할핀	PIN , SPLIT	1	3X25		
711	08	20087110010A	깊이조절가이드	GUIDE , DEPTH	1			
711	09	V2183608020	소형육각볼트보통(SP)	BOLT , HEX/SP	2	M8x20(SP)		
711	10	20087110030	손잡이	GRIP	1			

NOTE	

712	유압감지	PD60	Year / Month 2009 / 02	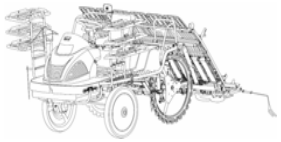

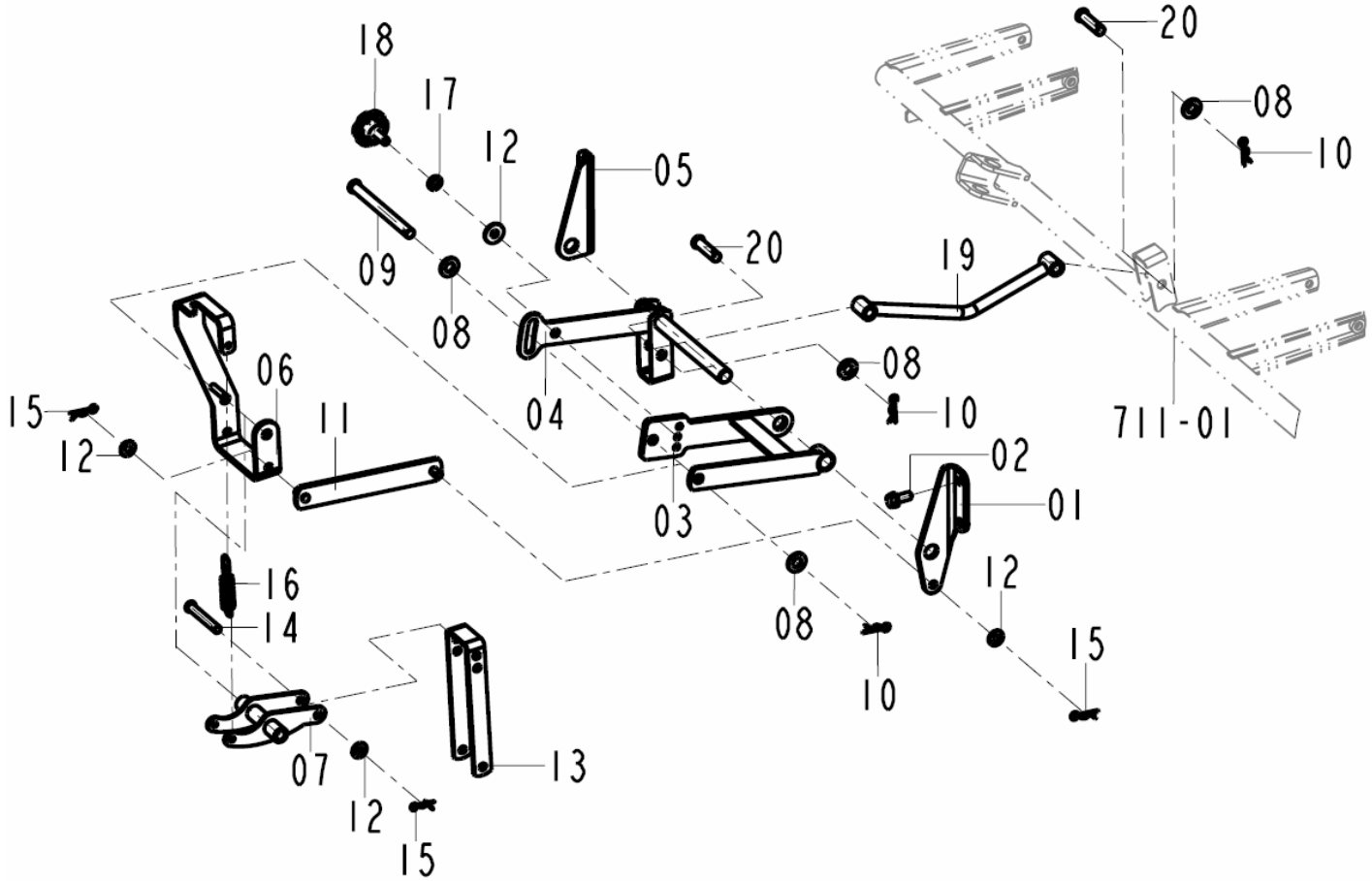

NOTE	

PDF Complete
Your complimentary use period has ended. Thank you for using PDF Complete.
Click Here to upgrade to Unlimited Pages and Expanded Features

712	유압감지	PD60	Year / Month 2009 / 02

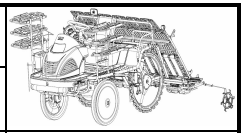

FIG.	NO.	부품번호	품명	PART NAME	수량	규격	비고	메모
712	01	20087120011A	지지플레이트(좌)	PLATE , LH/SUPPORT	1			
712	02	V2173608020	소형육각볼트보통(S)	BOLT , HEX/S	4	M8x20(S)		
712	03	20087122100C	플로트지지대 COMP	SUPPORT COMP , FLOAT	1			
712	04	20087122200E	영입각조절 COMP	LINKAGE COMP , SENSITIVITY	1			
712	05	20087120021A	지지플레이트(우)	PLATE , RH/SUPPORT	1			
712	06	20087122500C	감지가이드COMP	GUIDE COMP , SENSOR	1			
712	07	20087122401	감지링크 COMP	LINK COMP , SENSOR	1			
712	08	V4111600100	평와셔	WASHER , PLAIN	4	M10		
712	09	20087120040	핀(10X110)	PIN , 10X110	1	10x110		
712	10	20082100040	헤어핀(D=10)	PIN , SNAP/10	3			
712	11	20087122600C	연결플레이트(하) COMP	PLATE COMP , LOW	1			
712	12	V4111600080	평와셔	WASHER , PLAIN	4	M8		
712	13	20087120051A	감지링크(하)	LINK , LOW/SENSOR	1			
712	14	20087120060	핀(08X55)	PIN , 08X55	2	8x55		
712	15	39081700200	헤어핀 (8)	PIN , SNAP/8	3			
712	16	20087120080B	감지스프링	SPRING , SENSOR	1			
712	17	V4011600080	스프링와셔	WASHER , SPRING	1	M8		
712	18	13766010031B	손잡이보울트(M08X21)	BOLT , HAND	1	M08x21		
712	19	20087122301A	플로트로드 COMP	ROD COMP, FLOAT	1			
712	20	20087120070	핀(10X32)	PIN , 10X32	2			

NOTE	

716	센터 플로트	PD60	Year / Month 2009 / 02	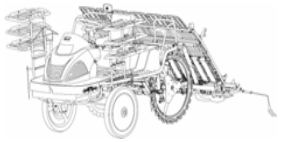

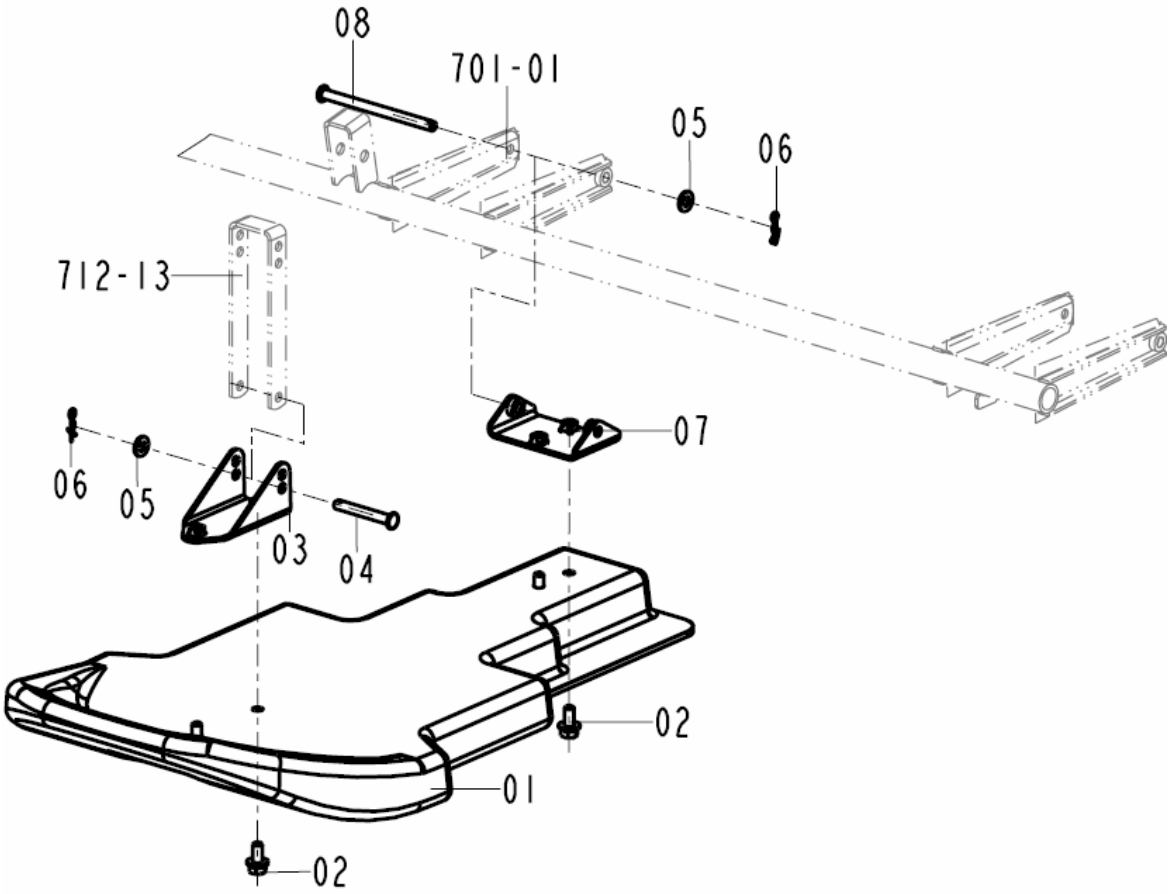

NOTE	

PDF Complete
Your complimentary use period has ended. Thank you for using PDF Complete.
Click Here to upgrade to Unlimited Pages and Expanded Features

716	센터 플로트	PD60	Year / Month 2009 / 02

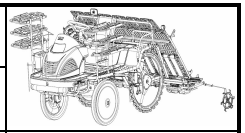

FIG.	NO.	부품번호	품명	PART NAME	수량	규격	비고	메모
716	01	21466600014G	센터플로트(6)	FLOAT , CTR/6	1			
716	02	V2173608020	소형육각볼트보통(S)	BOLT , HEX/S	4	M8x20(S)		
716	03	20087162100C	플레이트	PLATE	1			
716	04	20087120060	핀(08X55)	PIN , 08X55	1	8x55		
716	05	V4111600080	평와셔	WASHER , PLAIN	2	M8		
716	06	39081700200	헤어핀 (8)	PIN , SNAP/8	2			
716	07	20087162200A	플로트지지대(후) COMP	BRACKET COMP , RR	1			
716	08	20087120070	핀(10X32)	PIN , 10X32	1			

NOTE	

717	사이드플로트	PD60	Year / Month 2009 / 02	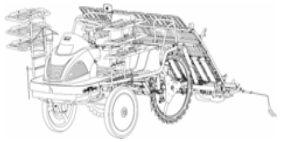

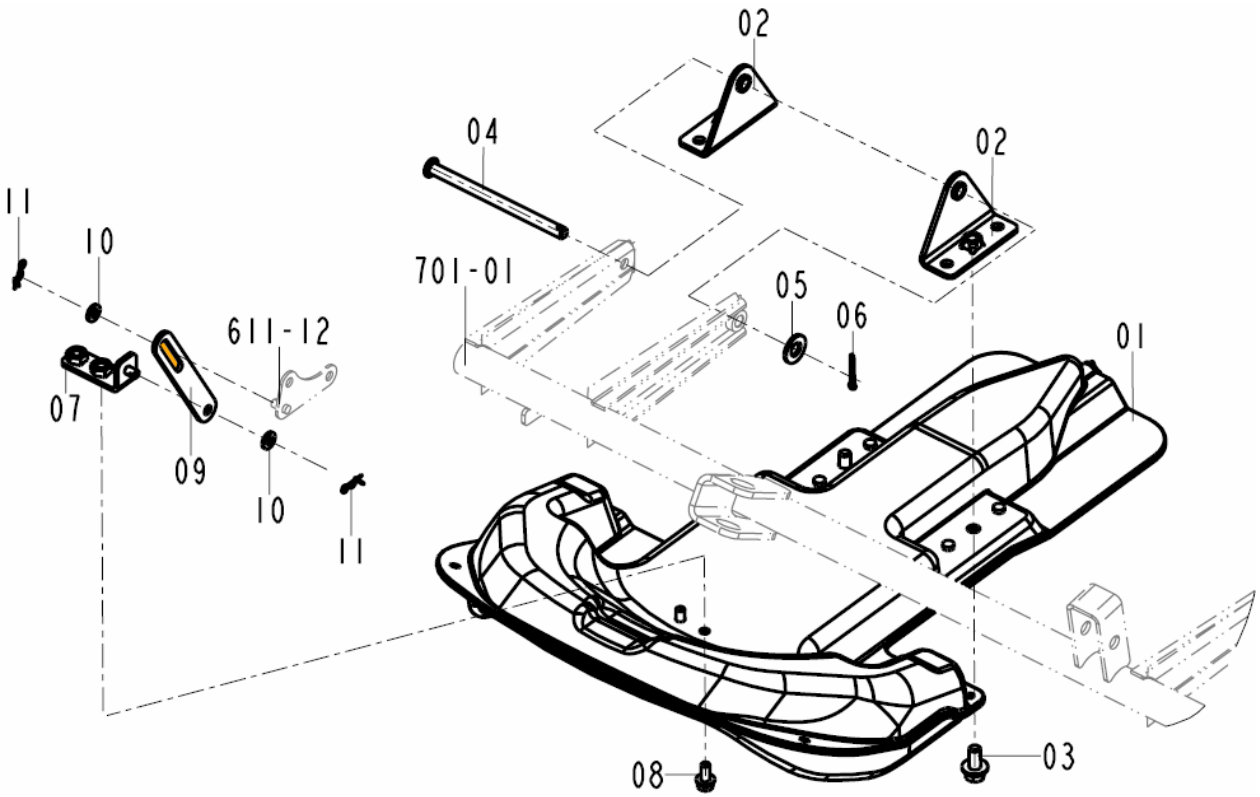

NOTE	

PDF Complete
Your complimentary use period has ended. Thank you for using PDF Complete.
Click Here to upgrade to Unlimited Pages and Expanded Features

717	사이드플로트	PD60	Year / Month 2009 / 02

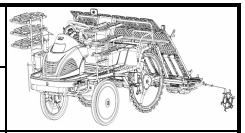

FIG.	NO.	부품번호	품명	PART NAME	수량	규격	비고	메모
717	01	20087170010A	사이드플로트(5)	FLOAT , SIDE/5	2			
717	02	20087172200A	플로트지지대(후) COMP	BRACKET COMP , RR	4			
717	03	V2183608020	소형육각볼트보통(SP)	BOLT , HEX/SP	4	M8x20(SP)		
717	04	20087160020B	핀(08X110)	PIN , 08X110	2			
717	05	V4111600080	평와셔	WASHER , PLAIN	2	M8		
717	06	39081700200	헤어핀 (8)	PIN , SNAP/8	2			
717	07	20087172300A	플레이트 COMP	PLATE COMP	2			
717	08	V2123606016	소형육각볼트보통(SP)	BOLT , HEX/SP	4	M6x16(SP)		
717	09	20087170030A	연결플레이트	PLATE , CONNECT	2			
717	10	V4111600060	평와셔	WASHER , PLAIN	4	M6		
717	11	21306010180	헤어핀(6)	PIN , SNAP(6)	4			

NOTE	

721	전판	PD60	Year / Month 2009 / 02	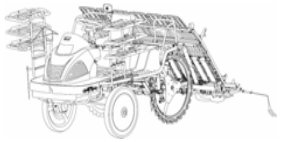

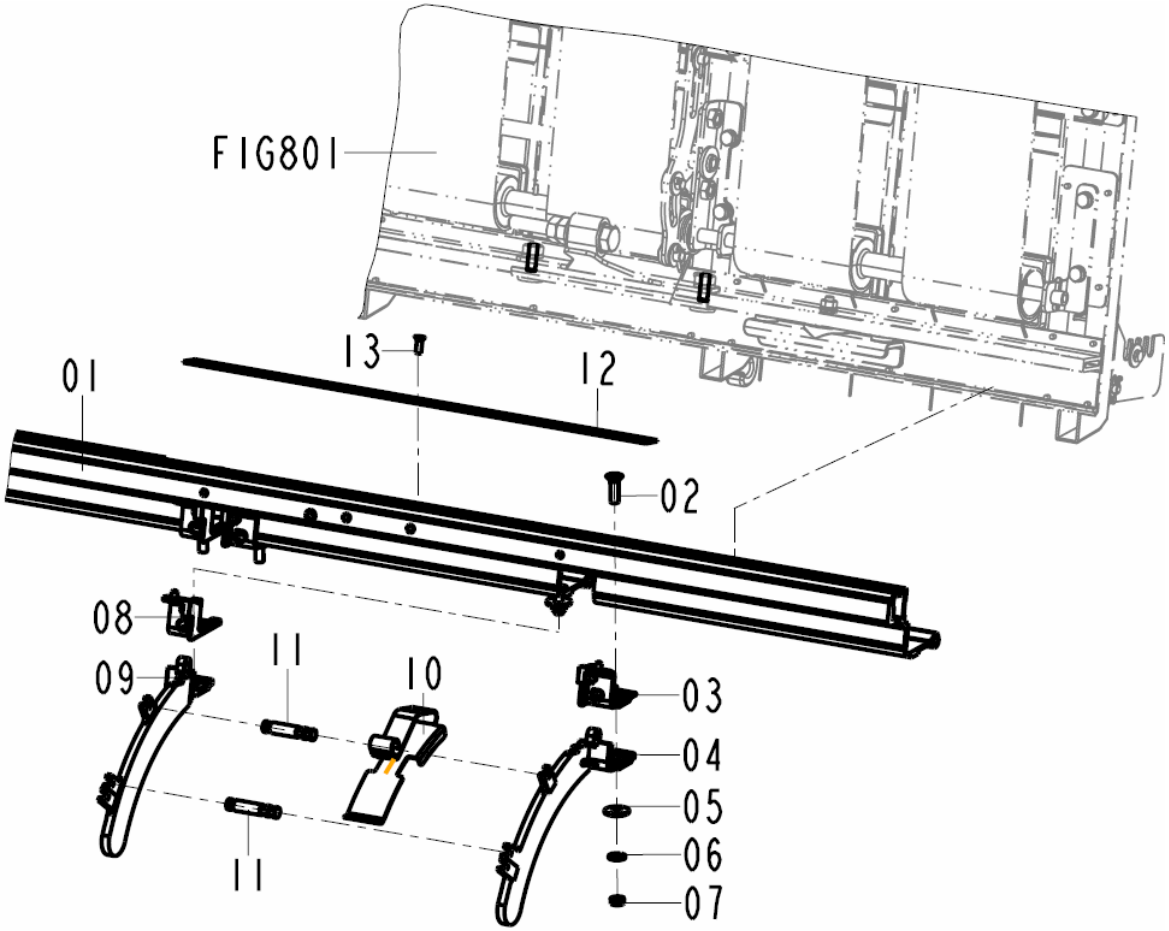

NOTE	

PDF Complete
Your complimentary use period has ended. Thank you for using PDF Complete.
Click Here to upgrade to Unlimited Pages and Expanded Features

721	전판	PD60	Year / Month 2009 / 02

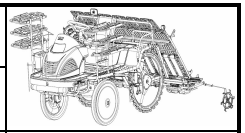

FIG.	NO.	부품번호	품명	PART NAME	수량	규격	비고	메모
721	01	20087210010C	전판	PLATE , FRONT	1			
721	02	V1127006020	십자홈접시작은나사	SCREW . C/R FLAT	12	M6x20		
721	03	21568050521B	묘취구가이드(L)	GUIDE , LH HOLE/SEEDLING	3			
721	04	21568050540A	묘가이드(L)	GUIDE , LH SEEDLING	3			
721	05	21567380020	와셔(6X18X1.6)	WASHER , 6X18X1.6	12			
721	06	V4017000060	스프링와셔	WASHER , SPRING	12	M6		
721	07	V3007000060	육각너트보통1종	NUT , HEX/1	12	M6		
721	08	21568050531B	묘취구가이드(R)	GUIDE , RH HOLE/SEEDLING	3			
721	09	21568050550A	묘가이드(R)	GUIDE , RH SEEDLING	3			
721	10	20087120031	포트가이드	GUIDE , POT	6			
721	11	21568050560	묘가이드고정봉	BAR , GUIDE/SEEDLING	12			
721	12	21568050122B	전판플레이트(I/18X2.0)	PLATE , I/18X2.0	4			
721	13	V1122604012	십자홈접시작은나사	SCREW , C/R FLAT	12	M4x12		

NOTE	

723	묘취량조절	PD60	Year / Month 2009 / 02	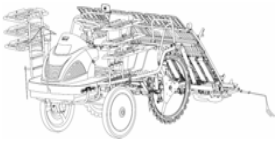

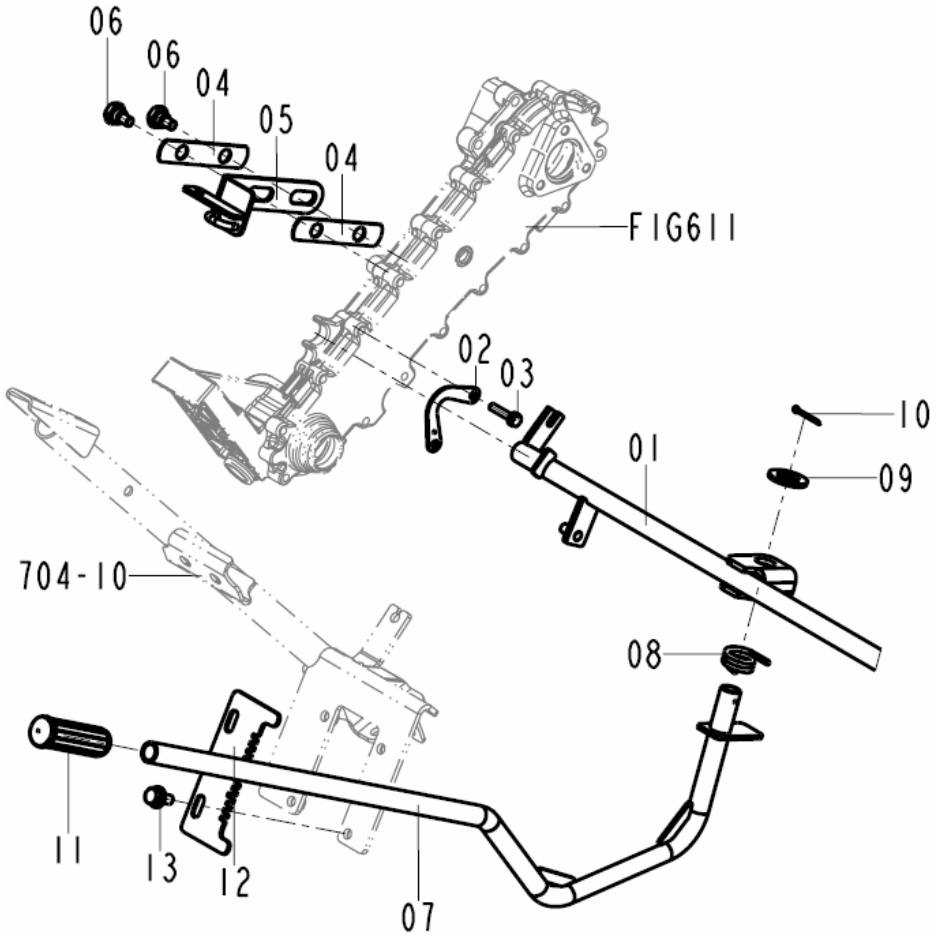

NOTE	

PDF Complete
Your complimentary use period has ended. Thank you for using PDF Complete.
Click Here to upgrade to Unlimited Pages and Expanded Features

723	묘취량조절	PD60	Year / Month 2009/ 02

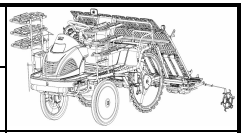

FIG.	NO.	부품번호	품명	PART NAME	수량	규격	비고	메모
723	01	20087232103A	묘취량조절로드 COMP	ROD COMP , ADJUST/AMOUNT	1			
723	02	20087230010A	고정플레이트	PLATE , FIX	3			
723	03	V2113606030	육각볼트(S)	BOLT , HEX /S	6	M6x30(S)		
723	04	20087220010B	가이드플레이트	PLATE , GUIDE	6			
723	05	20087222101A	슬라이드베이스 COMP	BASE COMP , SLIDING	3			
723	06	20087220020A	슬라이드볼트	BOLT , SLIDE	6			
723	07	20087232204	묘취량조절레버 COMP	LEVER COMP , ADJUST/AMOUNT	1			
723	08	20087230040	스프링(HT)	Sping	1			
723	09	V4111600180	평와셔	WASHER , PLAIN	1	M18		
723	10	V5001930025	분할핀	PIN , SPLIT	1	3X25		
723	11	20087110030	손잡이	GRIP	1			
723	12	20087230032	묘취량조절가이드	GUIDE , AMOUNT	1			
723	13	V2183608020	소형육각볼트보통(SP)	BOLT , HEX/SP	2	M8x20(SP)		

NOTE	

801	묘탱크	PD60	Year / Month 2009 / 02	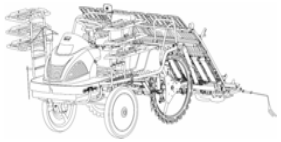

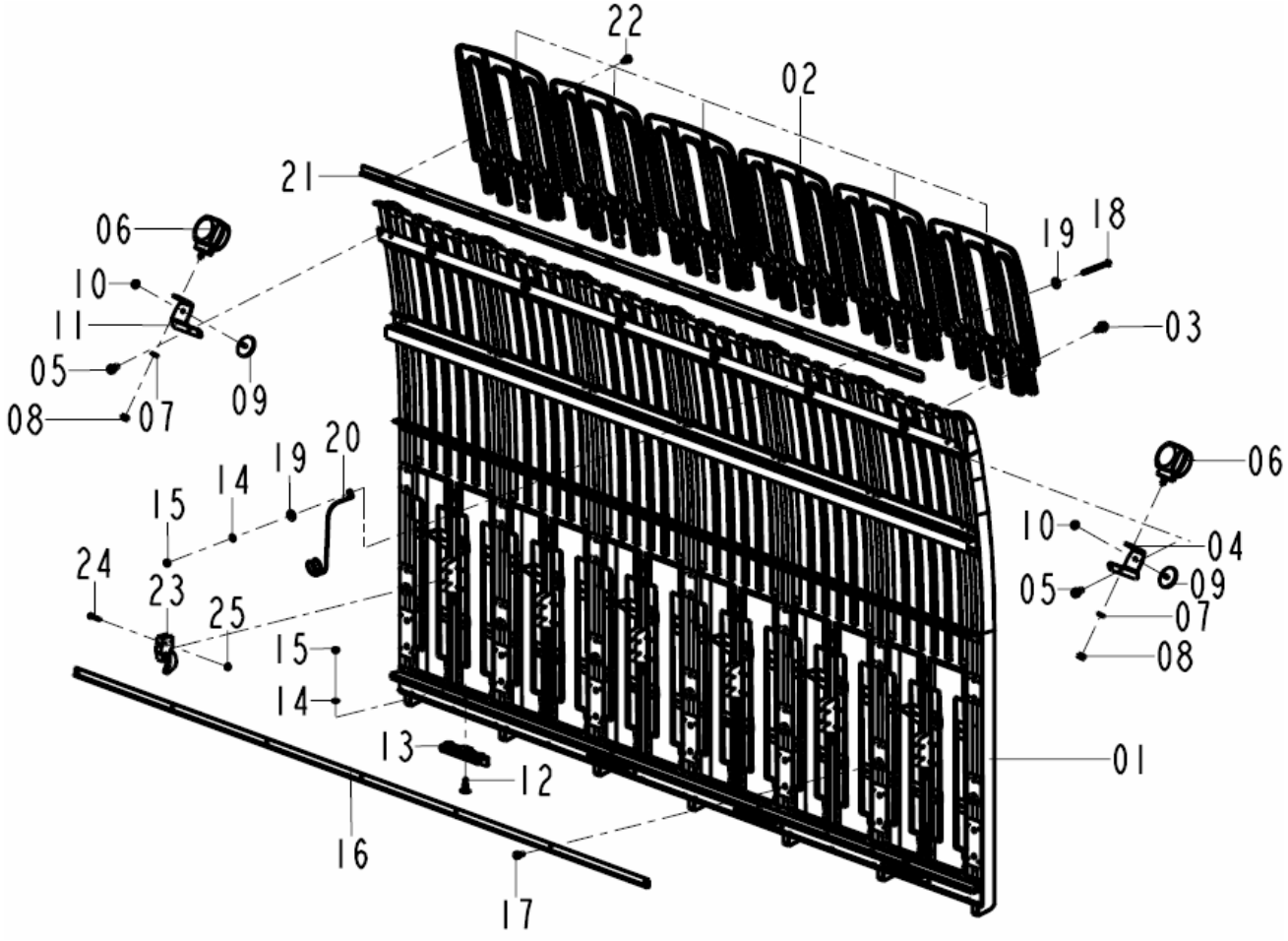

NOTE	

PDF Complete
Your complimentary use period has ended. Thank you for using PDF Complete.
Click Here to upgrade to Unlimited Pages and Expanded Features

801	묘탱크	PD60	Year / Month 2009 / 02

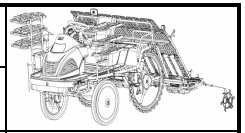

FIG.	NO.	부품번호	품명	PART NAME	수량	규격	비고	메모
801	01	20088012101	묘탱크 COMP	BED COMP	1			
801	02	20088010010A	연장묘탱크	BED , EXTRNSION	6			
801	03	V2183608020	소형육각볼트보통(SP)	BOLT , HEX/SP	6	M8x20(SP)		
801	04	20085330010	램프브라킷(좌)	BRACKET , LH/LAMP	1			
801	05	V2113608016	육각볼트(S)	BOLT , HEX /S	4			
801	06	20085332400	플래셔램프 ASSY	LAMP ASSY , FLASHER	2			
801	07	V4011600080	스프링와셔	WASHER , SPRING	2	M8		
801	08	V3042600080	소형육각너트보통2종	NUT , HEX/2	2	M8		
801	09	14166000570	리플렉터 ASSY	REFRACTOR , ASSY	2			
801	10	V3802600060	플랜지붙이육각너트	NUT , HEX FLANGE	5	M6		
801	11	20085330021	램프브라킷(우)	BRACKET , RH/LAMP	1			
801	12	21348010011A	전판슬라이드	PLATE , FR SLIDER	4			
801	13	21328010020A	슬라이더 멈춤핀	PIN , SLIDER STOP	4			
801	14	V4011600060	스프링와셔	WASHER , SPRING	4	M6		
801	15	V3042600060	소형육각너트보통2종	NUT , HEX/2	5	M6		
801	16	20088010030B	보강판	PALTE	1			
801	17	V2113606016	육각볼트(S)	BOLT , HEX /S	7	M6x16(S)		
801	18	V2113606065	육각볼트(S)	BOLT , HEX /S	1	M6x65(S)		
801	19	35605033020	와이어인출용와셔	WASHER , WIRE WITHDRAWAL	2			
801	20	20088040090	케이블후크	HOOK , CABLE	1			
801	21	20088012300	연장묘탱크 지지COMP	PLATE COMP, BED/EXTRNSION	1			
801	22	V2123606016	소형육각볼트보통(SP)	BOLT , HEX/SP	12	M6x16(SP)		
801	23	21328012201	감지스위치 완성	SWITCH ASSY , SENSING	6			
801	24	V1222604030	십자홈냄비작은나사(SP)	SCREW , C/R PAN/SP	12	M4x30(SP)		
801	25	V3802600040	플랜지붙이육각너트	NUT , HEX FLANGE	12	M4		

NOTE

803	묘이송벨트	PD60	Year / Month 2009 / 02	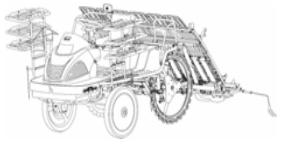

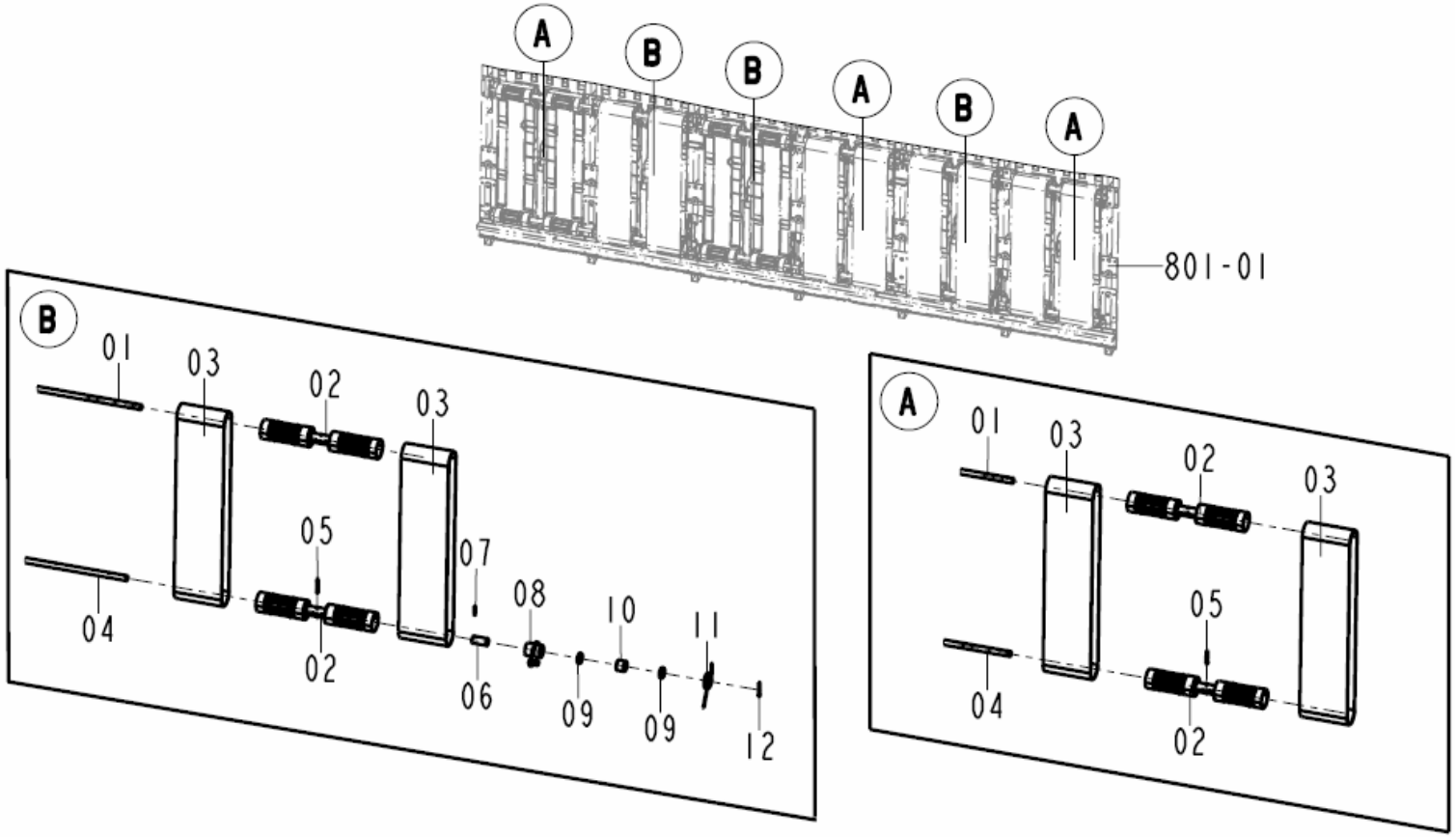

NOTE

PDF Complete
Your complimentary use period has ended. Thank you for using PDF Complete.
Click Here to upgrade to Unlimited Pages and Expanded Features

803	묘이송벨트	PD60	Year / Month 2009 / 02

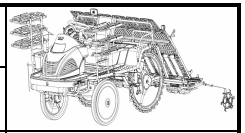

FIG.	NO.	부품번호	품명	PART NAME	수량	규격	비고	메모
803	01	20088030080	묘이송축(상)	SHAFT , UPR/CARRYING	3			
803	02	20088032200	묘이송롤러 COMP	ROLLER COMP, CARRYING	12			
803	03	20088030031	묘이송벨트	BELT , CARRYING	12			
803	04	20088030010B	묘이송축(하)	SHAFT , LOW	3			
803	05	V5001930025	분할핀	PIN , SPLIT	6	3.0X25		
803	06	20088030040C	부시(10X14X30)	BUSH , 10X14X30	3			
803	07	V5801403018	스프링핀	PIN , SPRING	3			
803	08	20088032400B	묘이송암 COMP	ARM COMP , CARRYING	3			
803	09	20088030060	오일실(TC142004)	SEAL , OIL/14X20X4	6	142004		
803	10	20088030050	원웨이클러치/14X20X16	CLUTCH , ONE WAY/14X20X16	3			
803	11	20088030110D	리턴스프링(우)	SPRING , RH/HT028	3			
803	12	V5001930020	분할핀	PIN , SPLIT	3	3.0X20		

NOTE	

804	묘종이송	PD60	Year / Month 2009 / 02	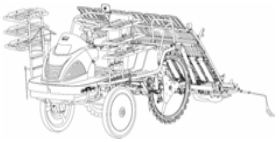

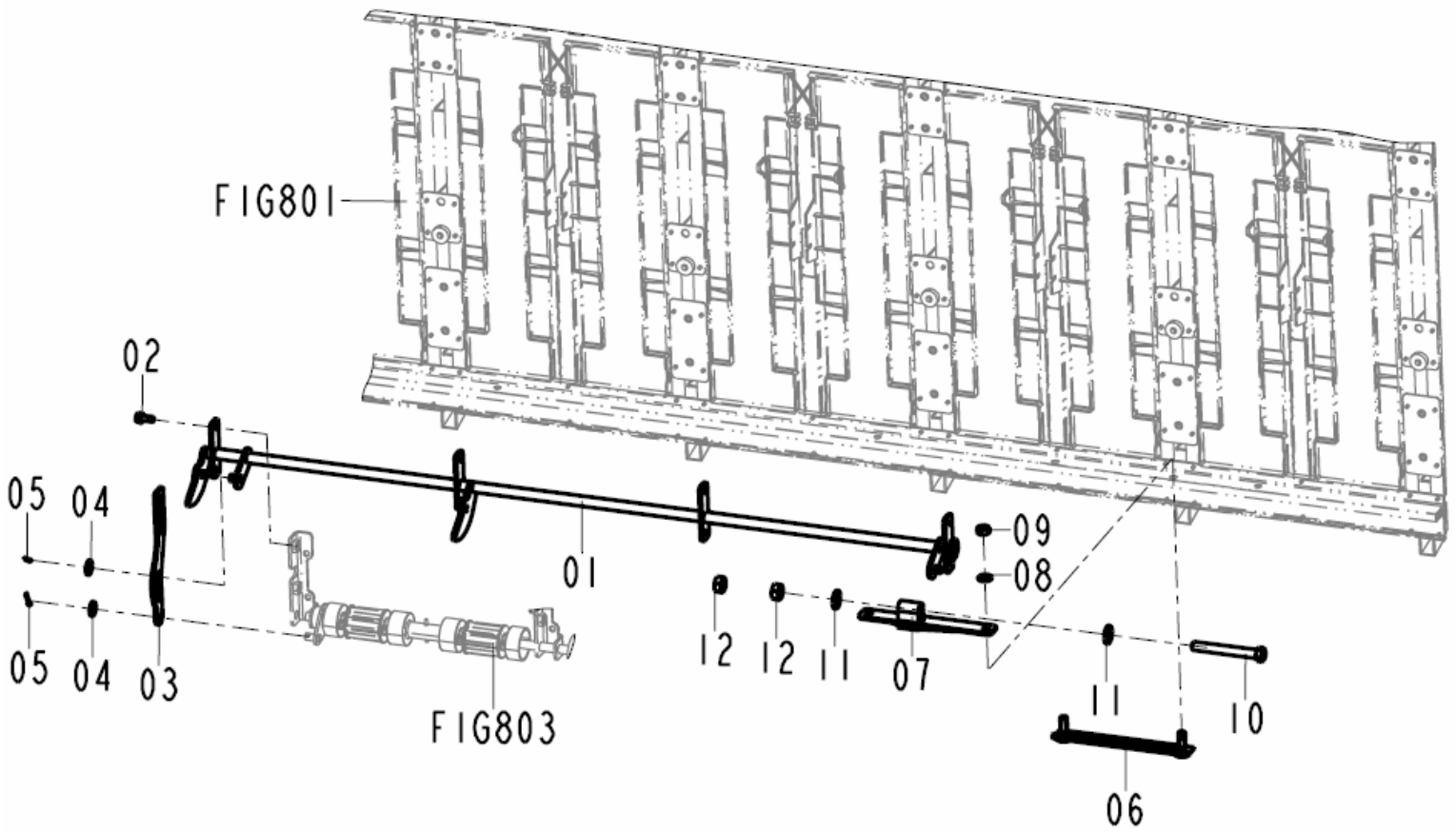

NOTE

PDF Complete
Your complimentary use period has ended. Thank you for using PDF Complete.
Click Here to upgrade to Unlimited Pages and Expanded Features

804	묘종이송	PD60	Year / Month 2009 / 02

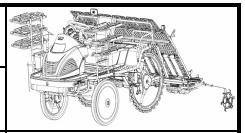

FIG.	NO.	부품번호	품명	PART NAME	수량	규격	비고	메모
804	01	20088042201B	이송브라킷 COMP	BRACKET COMP , CARRYING	1			
804	02	V2113606012	육각볼트(S)	BOLT , HEX /S	6	M6x12(S)		
804	03	20088040012	이송플레이트	PLATE , CARRYING	3			
804	04	V4111600080	평와셔	WASHER , PLAIN	6	M8		
804	05	V5001925020	분할핀	PIN , SPLIT	6	2.5X20		
804	06	20088022100A	횡이송베이스 COMP	BASE COMP , CROSS FEED	1			
804	07	20088022200E	횡이송스테이 COMP	STAY COMP , CROSS FEED	1			
804	08	V4011600080	스프링와셔	WASHER , SPRING	2	M8		
804	09	V3042600080	소형육각너트보통2종	NUT , HEX/2	2	M8		
804	10	V2013610080	소형육각볼트(보통)	BOLT , HEX	1	M10x80		
804	11	V4111600100	평와셔	WASHER , PLAIN	2	M10		
804	12	v3042600100	소형육각너트보통2종	NUT , HEX/2	2	M10		

NOTE	

805	묘이송축받침	PD60	Year / Month 2009 / 02	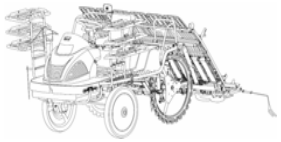

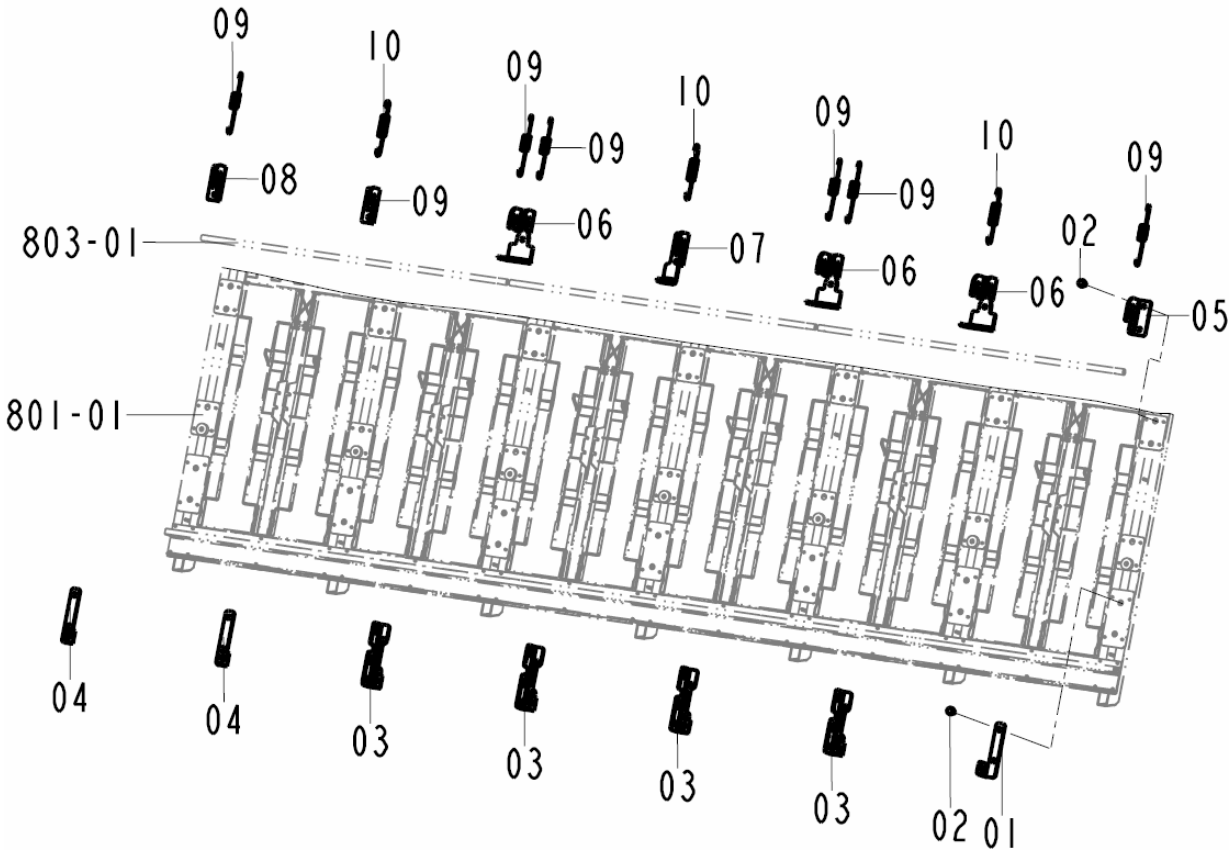

NOTE

PDF Complete
Your complimentary use period has ended. Thank you for using PDF Complete.
Click Here to upgrade to Unlimited Pages and Expanded Features

805	묘이송축받침	PD60	Year / Month 2009 / 02

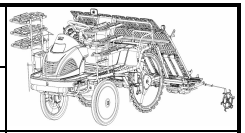

FIG.	NO.	부품번호	품명	PART NAME	수량	규격	비고	메모
805	01	20088030020B	축지지대(좌)	SUPPORT , LH/SHAFT	1			
805	02	V2113606012	육각볼트(S)	BOLT , HEX /S	28	M6x12(S)		
805	03	20088032700E	축지지대(중) COMP	SUPPORT COMP , CTR/SHAFT	4			
805	04	20088030070B	축지지대(우)	SUPPORT , RH/SHAFT	2			
805	05	20088030150A	축지지대(상/우)	SUPPORT , UPR/RH/SHAFT	1			
805	06	20088030140B	축지지대(상/중)	SUPPORT , UPR/CTR/SHAFT	3			
805	07	20088040060A	조절케이블받침	BRACKET , CABLE/ADJUST	1			
805	08	20088030130A	축지지대(상/좌)	SUPPORT , UPR/LHSHAFT	2			
805	09	20088030160	벨트스프링(7)	SPRING , BELT/7	6			
805	10	20088030170	벨트 스프링(14)	SPRING , BELT/14	3			

NOTE	

806	묘누르게	PD60	Year / Month 2009 / 02	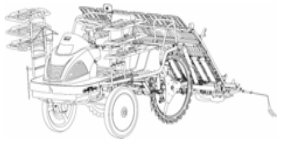

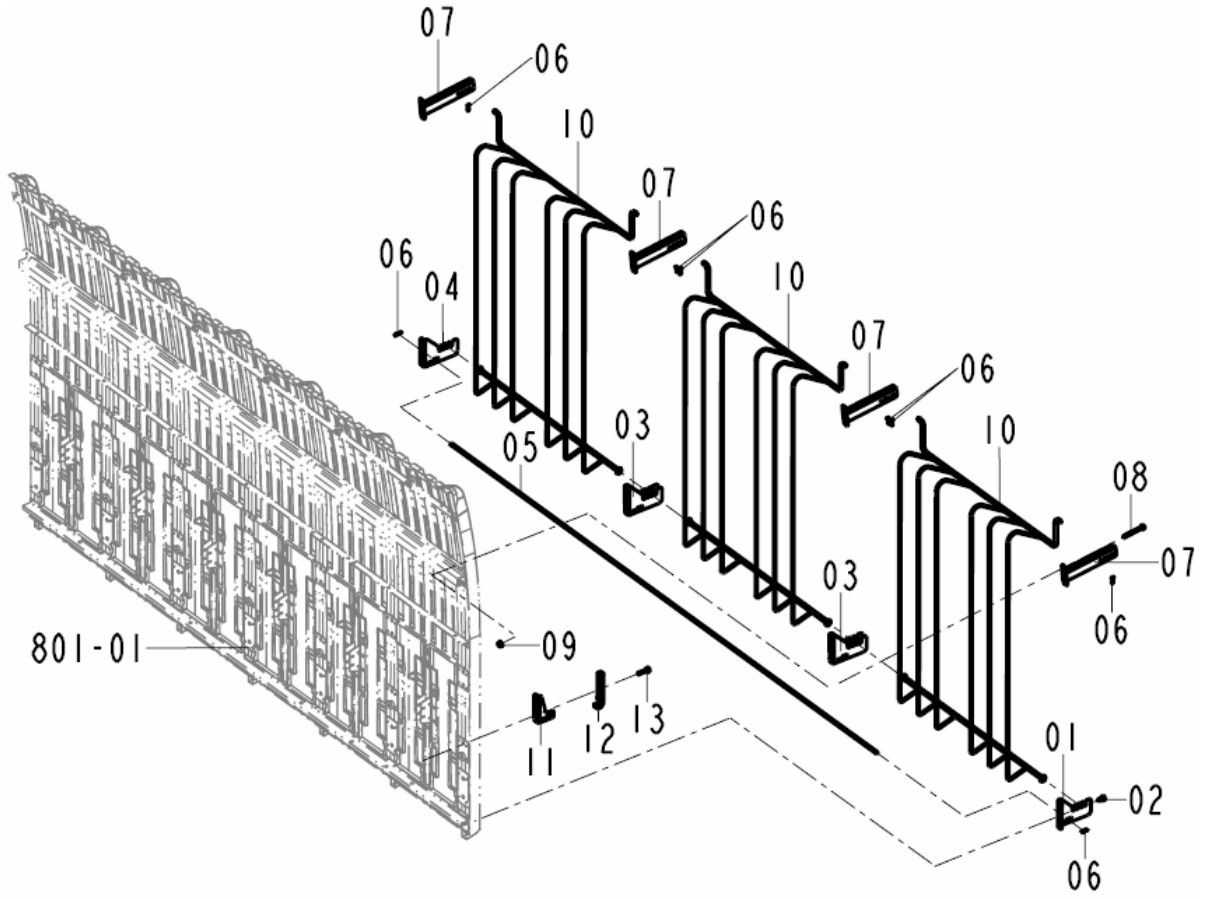

NOTE

PDF Complete
Your complimentary use period has ended. Thank you for using PDF Complete.
Click Here to upgrade to Unlimited Pages and Expanded Features

806	묘누르게	PD60	Year / Month 2009 / 02

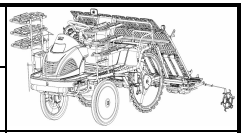

FIG.	NO.	부품번호	품명	PART NAME	수량	규격	비고	메모
806	01	20088060010B	묘누르게스테이(하/좌)	STAY , LH/LOW/PRESS	1			
806	02	V2113606016	육각볼트(S)	BOLT , HEX /S	8	M6x16		
806	03	20088060020C	묘누르게스테이(하/중)	STAY , CTR/LOW/PRESS	2			
806	04	20088060030B	묘누르게스테이(하/우)	STAY , RH/LOW/PRESS	1			
806	05	20088070010	저항봉	BAR , SUPPORT/SEEDLING	1			
806	06	21306010180	헤어핀(6)	PIN , SNAP(6)	8			
806	07	20088062700C	묘누르게스테이(상) COMP	STAY COMP , LH/PRESS	2			
806	08	V2113606060	육각볼트(S)	BOLT , HEX /S	8	M6x60(S)		
806	09	V3802600060	플랜지붙이육각너트	NUT , HEX FLANGE	8	M6		
806	10	20088062300F	묘누르게 COMP	PRESSOR COMP , SEEDLING	3			
806	11	20088060040B	저항봉고정판	PLATE , SUPPORT	3			
806	12	20088050050	묘탱크고정구	FIXTURE , BED	3			
806	13	V2113606030	육각볼트(S)	BOLT , HEX /S	6	M6x30(S)		

NOTE	

807	마커케이블	PD60	Year / Month 2009 / 02	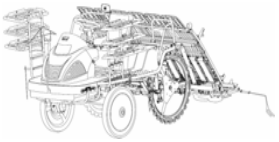

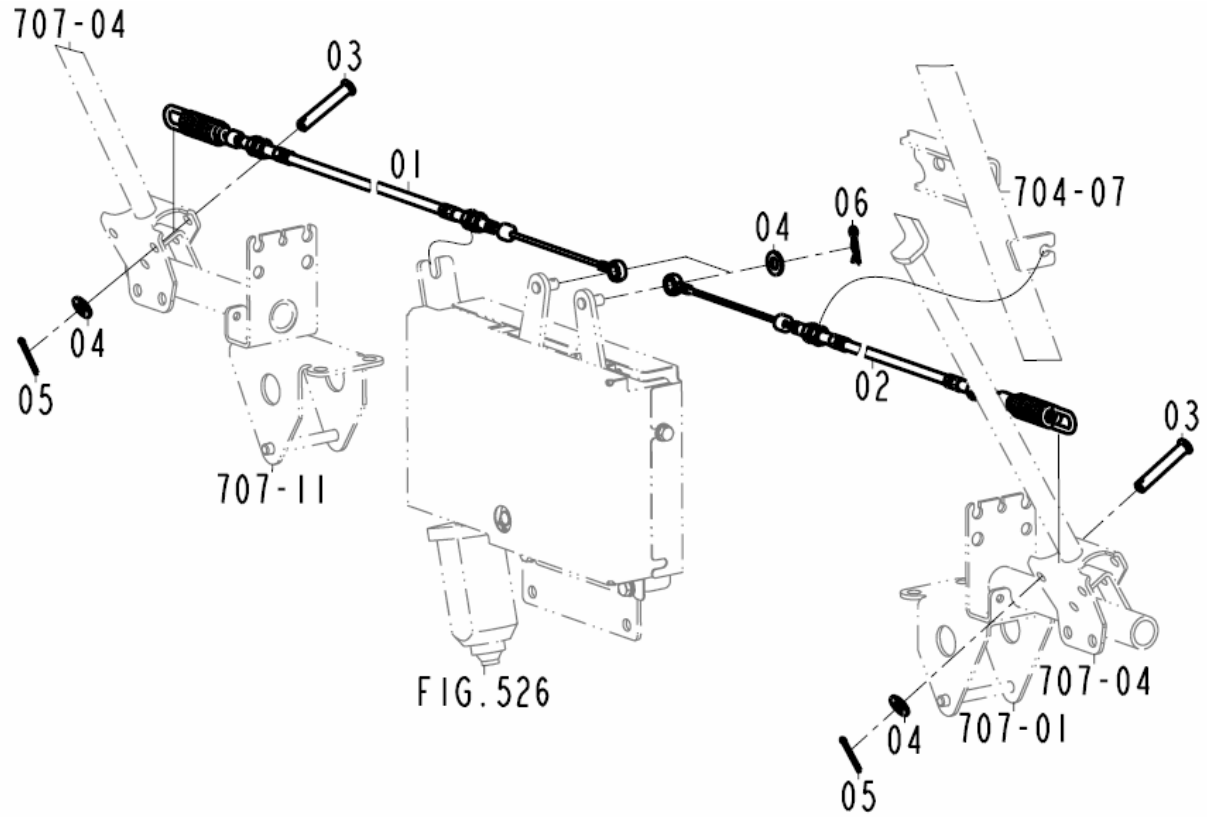

FIG.526

NOTE	

PDF Complete
Your complimentary use period has ended. Thank you for using PDF Complete.
Click Here to upgrade to Unlimited Pages and Expanded Features

807	마커케이블	PD60	Year / Month 2009 / 02

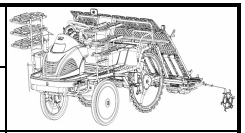

FIG.	NO.	부품번호	품명	PART NAME	수량	규격	비고	메모
807	01	20085270061	마커케이블(우)	CABLE,MARKER/RH	1			
807	02	20085270051	마커케이블(좌)	CABLE,MARKER/LH	1			
807	03	27231030010	바퀴고정핀 (4)	PIN , WHEEL/4	2			
807	04	V4111600080	평와셔	WASHER , PLAIN	4	M8		
807	05	V5001925025	분할핀	PIN , SPLIT	2	2.5X25		
807	06	39081700200	헤어핀 (8)	PIN , SNAP/8	2			

NOTE	

808	각조클러치케이블	PD60	Year / Month 2009 / 02	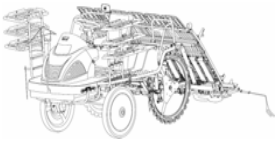

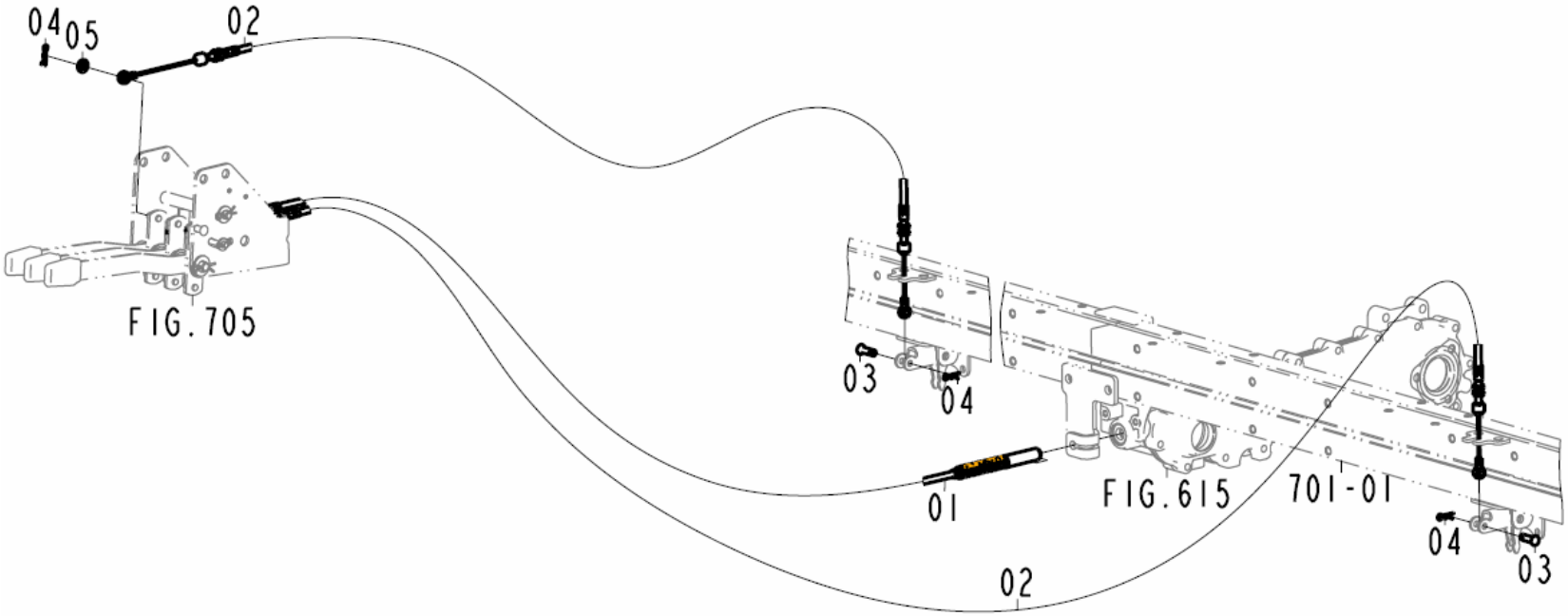

NOTE	

PDF Complete
Your complimentary use period has ended. Thank you for using PDF Complete.
Click Here to upgrade to Unlimited Pages and Expanded Features

808	각조클러치케이블	PD60	Year / Month 2009 / 02

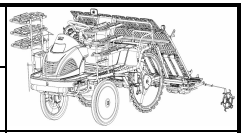

FIG.	NO.	부품번호	품명	PART NAME	수량	규격	비고	메모
808	01	20086150110F	각조클러치케이블(중)	CABLE , CTR/CLUTCH/RESPECTIVE	1			
808	02	20086150011A	각조클러치케이블	CABLE , CLUTCH/RESPECTIVE	2			
808	03	20086150090	각조클러치케이블핀	PIN , 06X16	2			
808	04	21306010180	헤어핀(6)	PIN , SNAP(6)	5			
808	05	V4111600060	평와셔	WASHER , PLAIN	3	M6		

NOTE	

809	초크스로틀케이블	PD60	Year / Month 2009 / 02	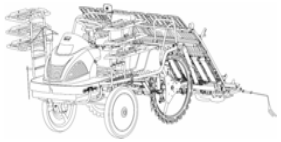

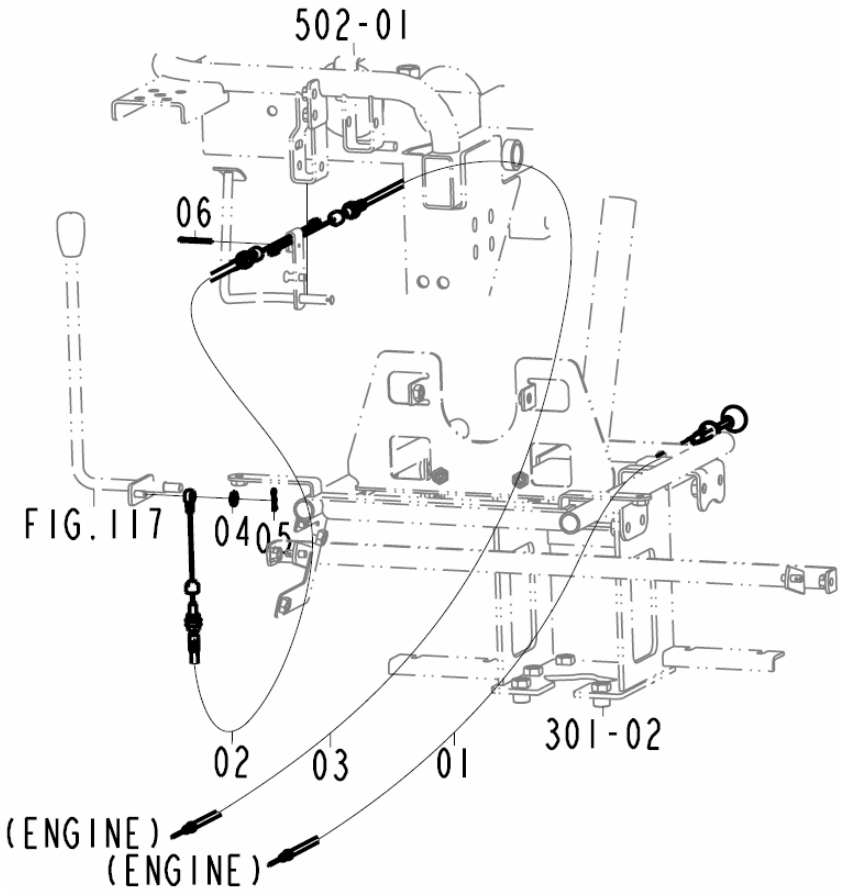

NOTE

PDF Complete
Your complimentary use period has ended. Thank you for using PDF Complete.
Click Here to upgrade to Unlimited Pages and Expanded Features

809	초크스로틀케이블	PD60	Year / Month 2009 / 02

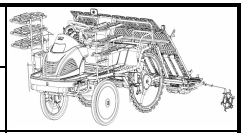

FIG.	NO.	부품번호	품명	PART NAME	수량	규격	비고	메모
809	01	20081170010C	초크케이블	CABLE , CHOKE	1			
809	02	20081170020D	스로틀케이블(페달-레버)	CABLE , THROTTLE(P-L)	1			
809	03	20081170030A	스로틀케이블(페달-레버)	CABLE , THROTTLE(P-L)	1			
809	04	V4111600060	평와셔	WASHER , PLAIN	1	M6		
809	05	21306010180	헤어핀(6)	PIN , SNAP(6)	1			
809	06	V5001925025	분할핀	PIN , SPLIT	1	2.5X25		

NOTE	

810	이송정지, 조절케이블	PD60	Year / Month 2009 / 02	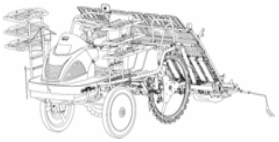

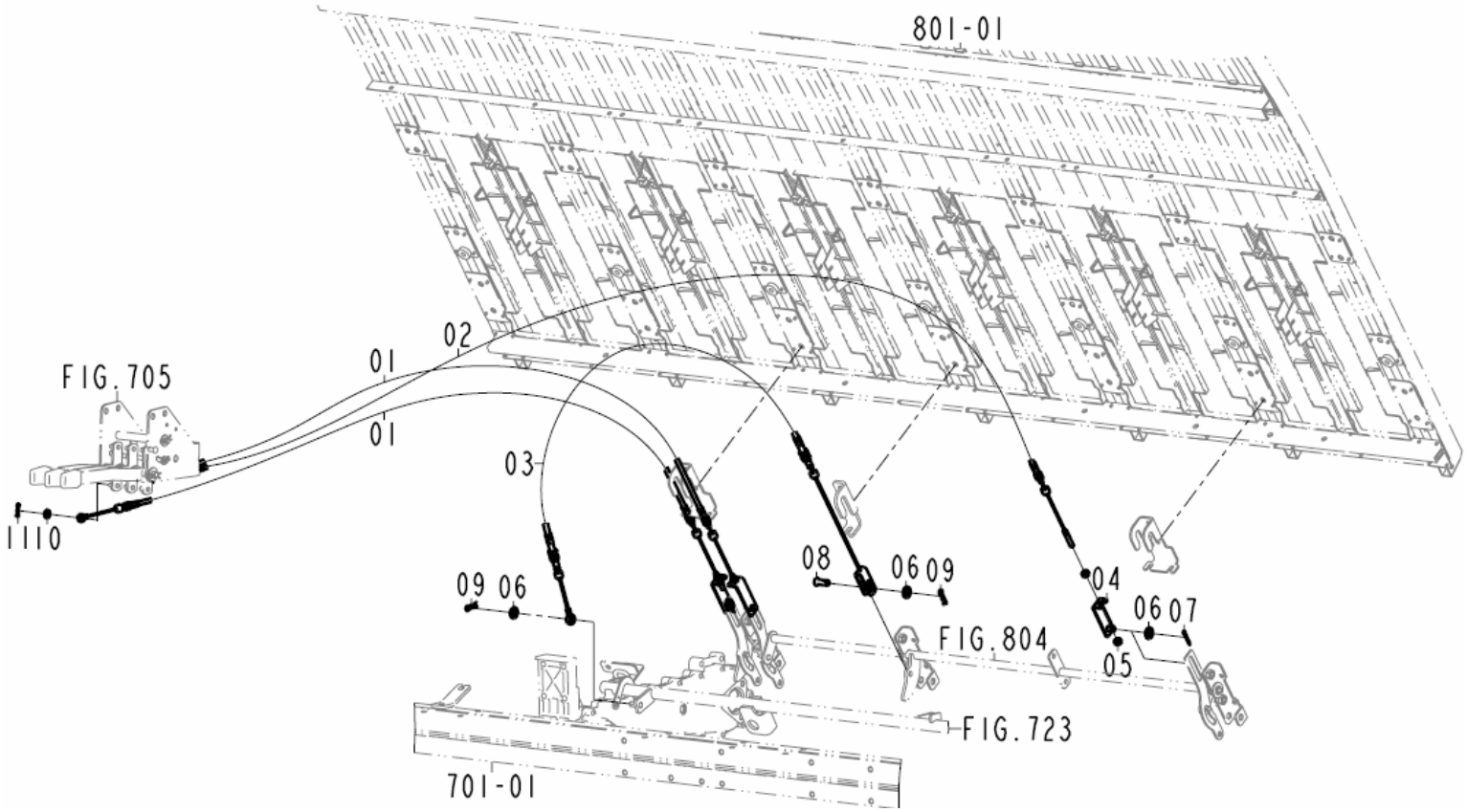

NOTE

PDF Complete
Your complimentary use period has ended. Thank you for using PDF Complete.
Click Here to upgrade to Unlimited Pages and Expanded Features

810	이송정지, 조절케이블	PD60	Year / Month 2009 / 02

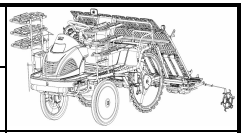

FIG.	NO.	부품번호	품명	PART NAME	수량	규격	비고	메모
810	01	20088040050F	이송정지케이블(우)	CABLE , RH/STOP/CARRYING	2			
810	02	20088040080A	이송정지케이블(좌)	CABLE , LH/STOP/CARRYING	1			
810	03	20088040070F	이송량조절케이블	CABLE , ADJUST/AMOUNT	1			
810	04	20088042600B	클러치플레이트 COMP	PLATE COMP, CLUTCH	3			
810	05	V3002600060	육각너트보통1종	NUT , HEX/1	6	M6		
810	06	V4111600080	평와셔	WASHER , PLAIN	5	M8		
810	07	V5001925020	분할핀	PIN , SPLIT	3	2.5X20		
810	08	21467110020	핀(8X21)	PIN , 8X21	1			
810	09	39081700200	헤어핀 (8)	PIN , SNAP/8	2			
810	10	V4111600060	평와셔	WASHER , PLAIN	3	M6		
810	11	21306010180	헤어핀(6)	PIN , SNAP(6)	3			

NOTE	

811	감지케이블	PD60	Year / Month 2009 / 02	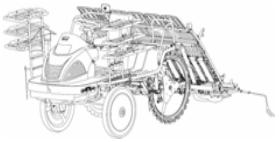

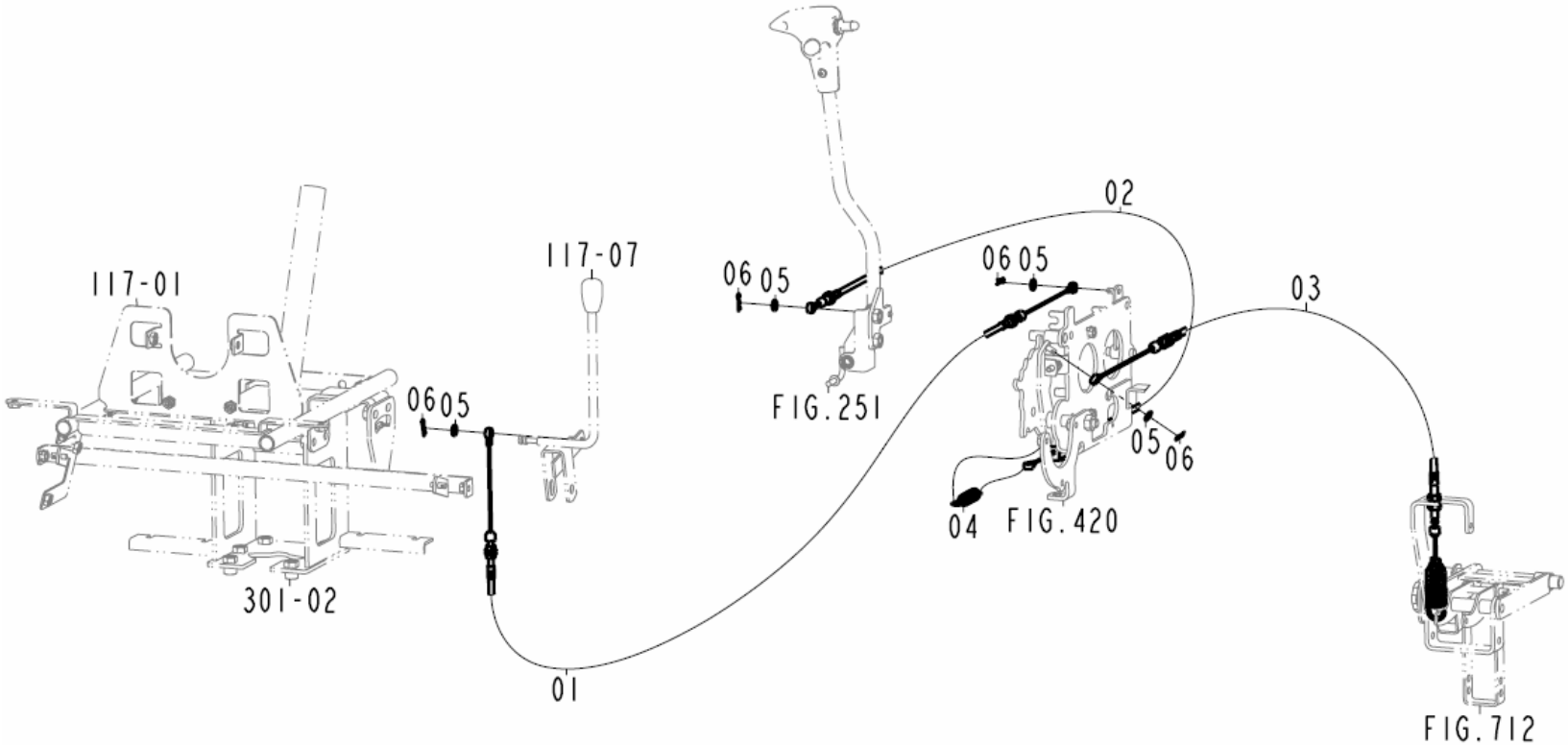

NOTE

PDF Complete
Your complimentary use period has ended. Thank you for using PDF Complete.
Click Here to upgrade to Unlimited Pages and Expanded Features

811	감지케이블	PD60	Year / Month 2009 / 02

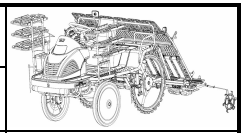

FIG.	NO.	부품번호	품명	PART NAME	수량	규격	비고	메모
811	01	20084220070D	감도조절케이블	CABLE , SENSITIVITY	1			
811	02	20084220080D	속도감응케이블	CABLE , VELOCITY SENSING	1			
811	03	20084220021A	감지케이블	CABLE , SENSING	4			
811	04	20087120080B	감지스프링	SPRING , SENSOR	1			
811	05	V4111600060	평와셔	WASHER , PLAIN	4	M6		
811	06	21306010180	헤어핀(6)	PIN , SNAP(6)	4			

NOTE	

812	엔진전기회로도	PD60	Year / Month 2009 / 02	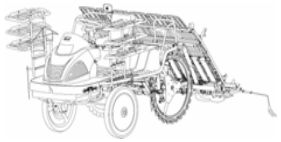

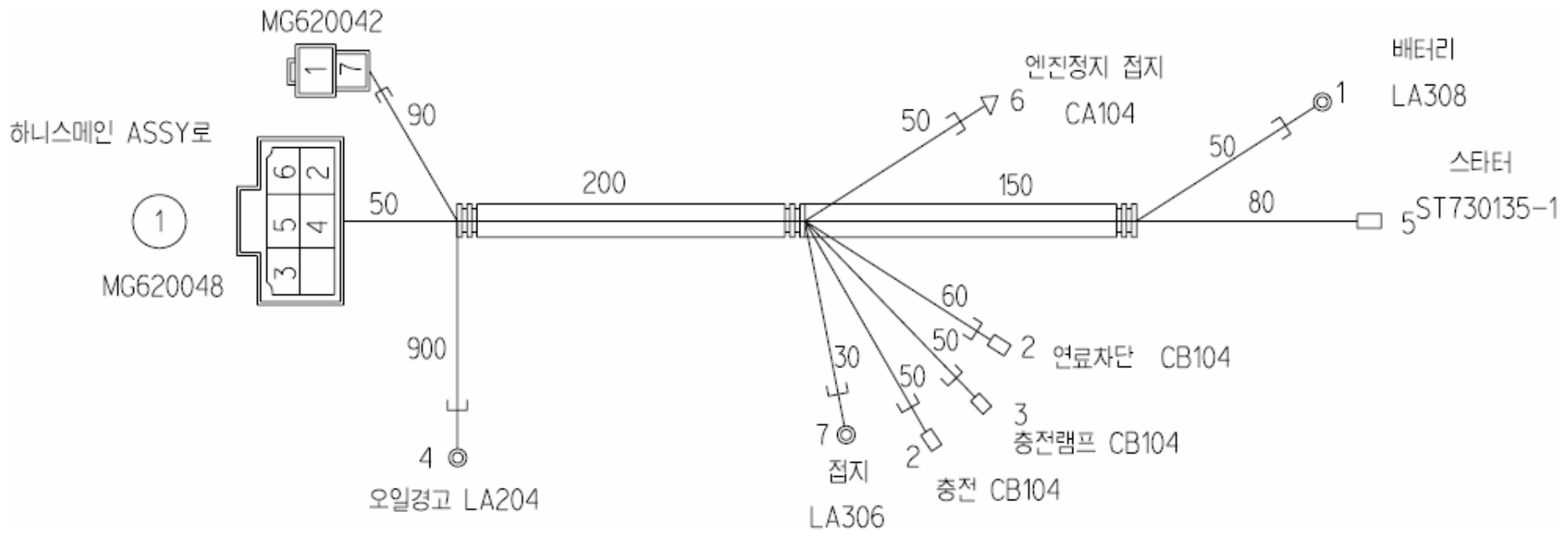

NOTE	

PDF Complete
Your complimentary use period has ended. Thank you for using PDF Complete.
Click Here to upgrade to Unlimited Pages and Expanded Features

812	엔진전기회로도	PD60	Year / Month 2009 / 02

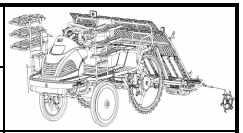

FIG.	NO.	부품번호	품명	PART NAME	수량	규격	비고	메모
812	01	20085342400	엔진하니스 ASSY	HARNESS ASSY , ENGINE	1			

NOTE	

813	주배선	PD60	Year / Month 2009 / 02	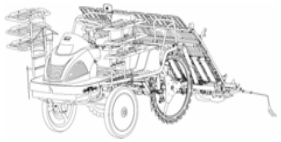

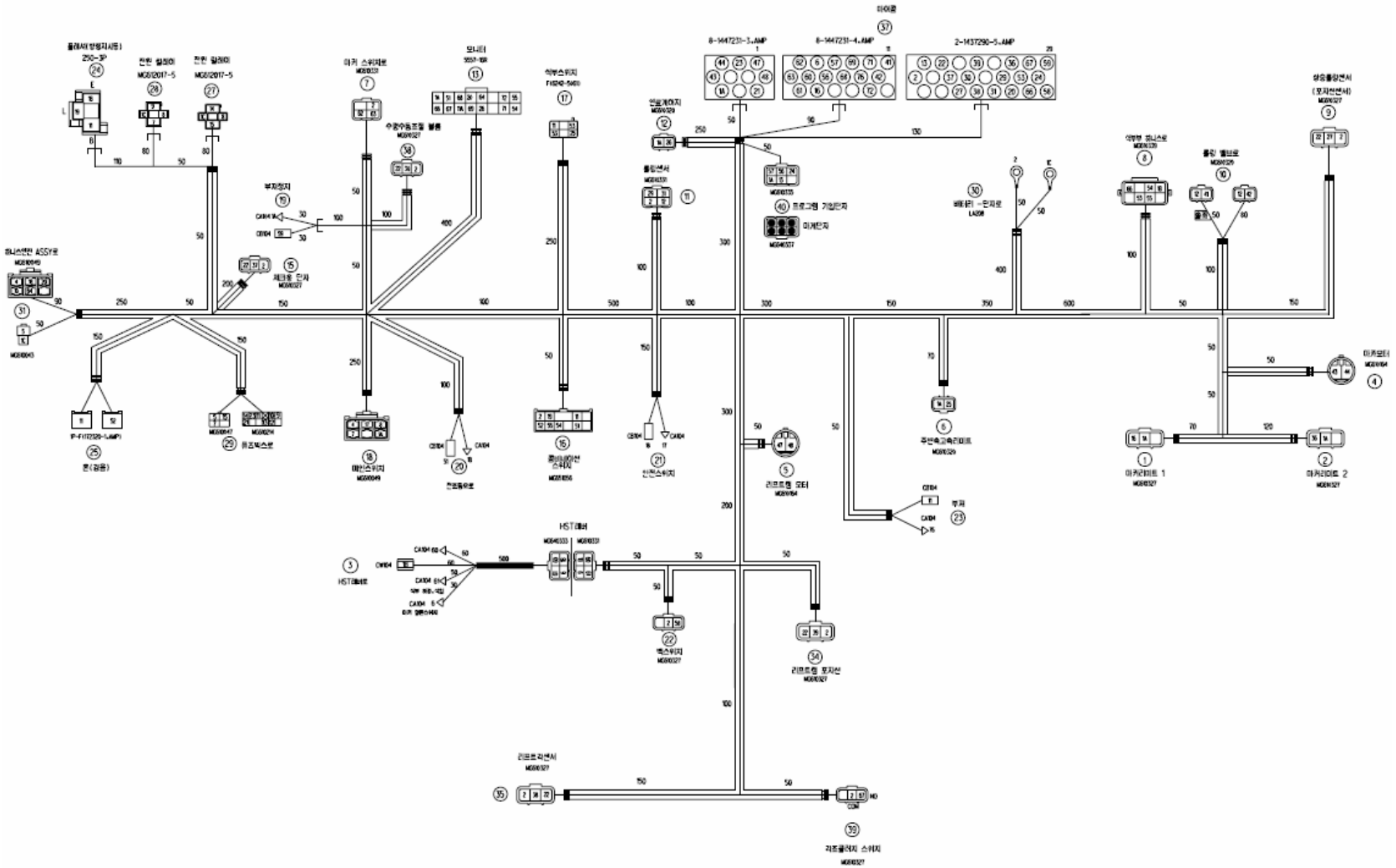

NOTE

PDF Complete
Your complimentary use period has ended. Thank you for using PDF Complete.
Click Here to upgrade to Unlimited Pages and Expanded Features

813	주배선	PD60	Year / Month 2009 / 02

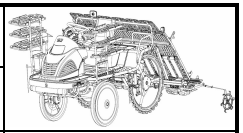

FIG.	NO.	부품번호	품명	PART NAME	수량	규격	비고	메모
813	01	20085342102B	메인하니스(K) ASSY	HARNESS ASSY , MAIN/K	1			

NOTE	

814	식부부전기회로도	PD60	Year / Month 2009 / 02	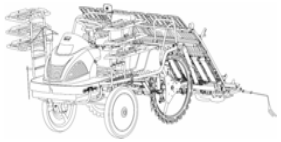

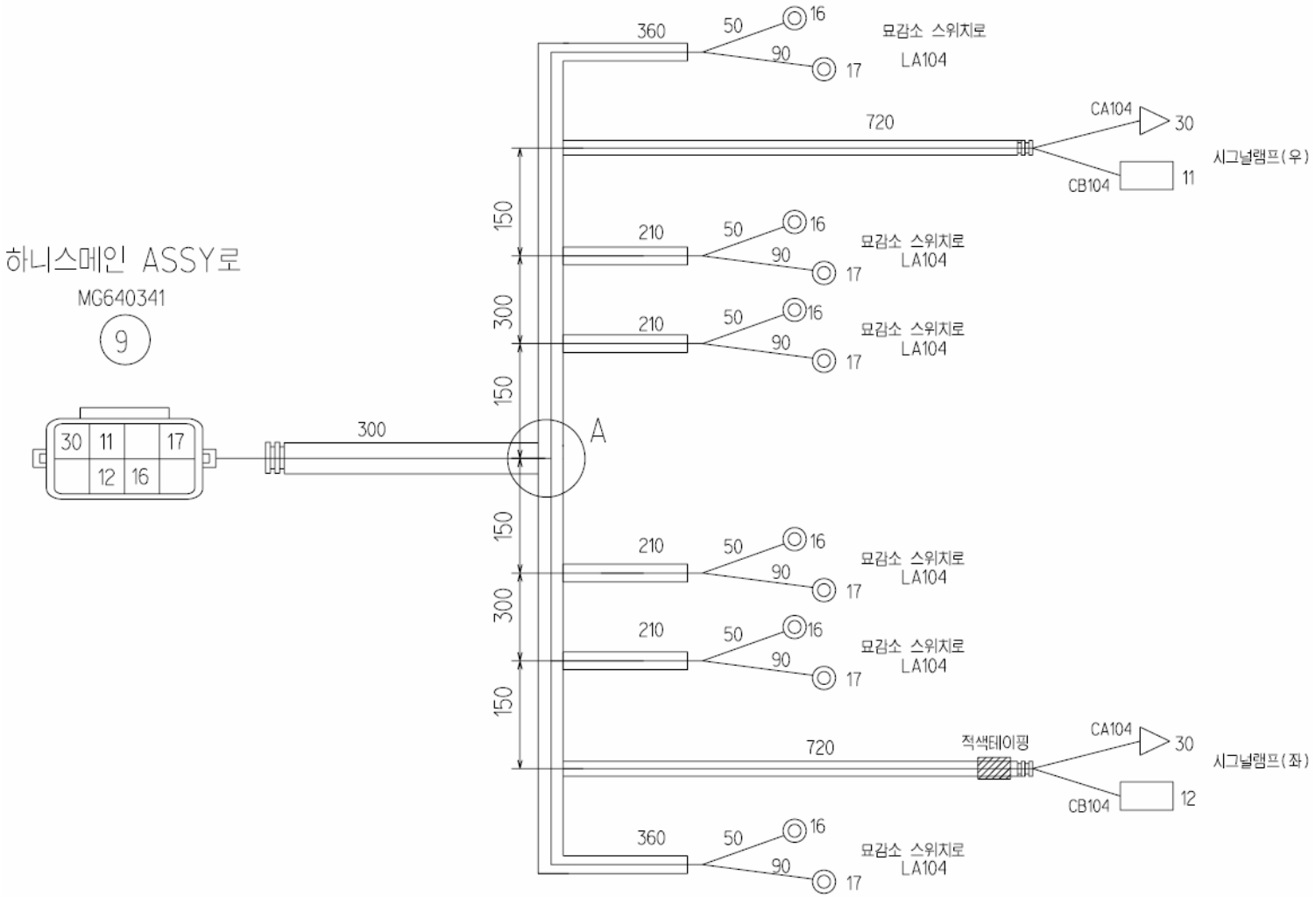

NOTE

PDF Complete
Your complimentary use period has ended. Thank you for using PDF Complete.
Click Here to upgrade to Unlimited Pages and Expanded Features

814	식부부전기회로도	PD60	Year / Month 2009 / 02

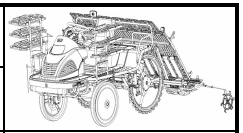

FIG.	NO.	부품번호	품명	PART NAME	수량	규격	비고	메모
814	01	20085342200B	식부하니스 ASSY	HARNESS ASSY , PLANTING	1			

NOTE	

815	마크	PD60	Year / Month 2009 / 02	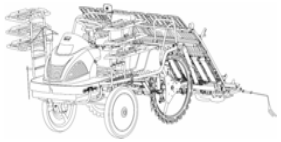

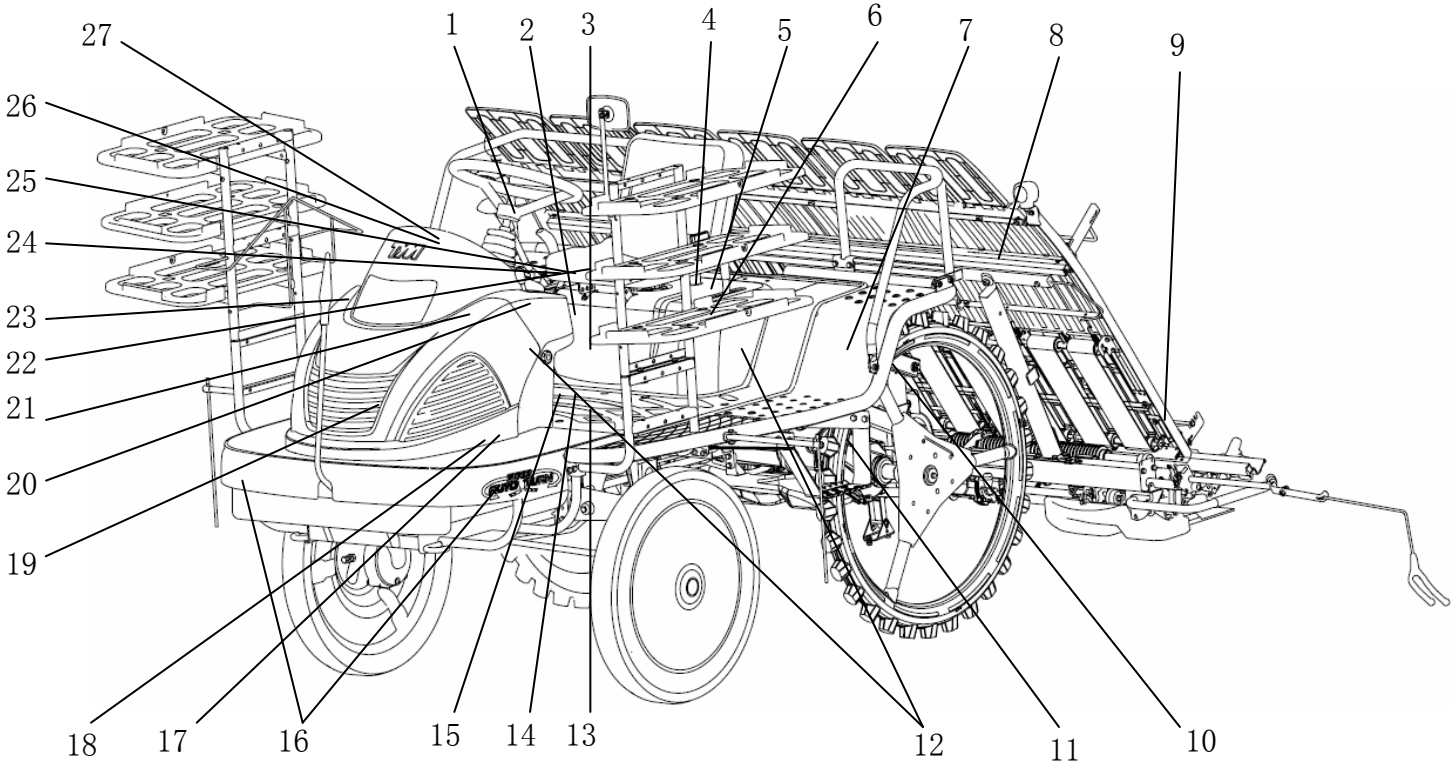

NOTE

816	마크상세	PD60	Year / Month 2009 / 02	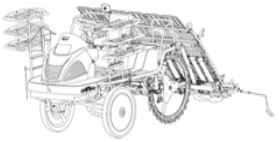

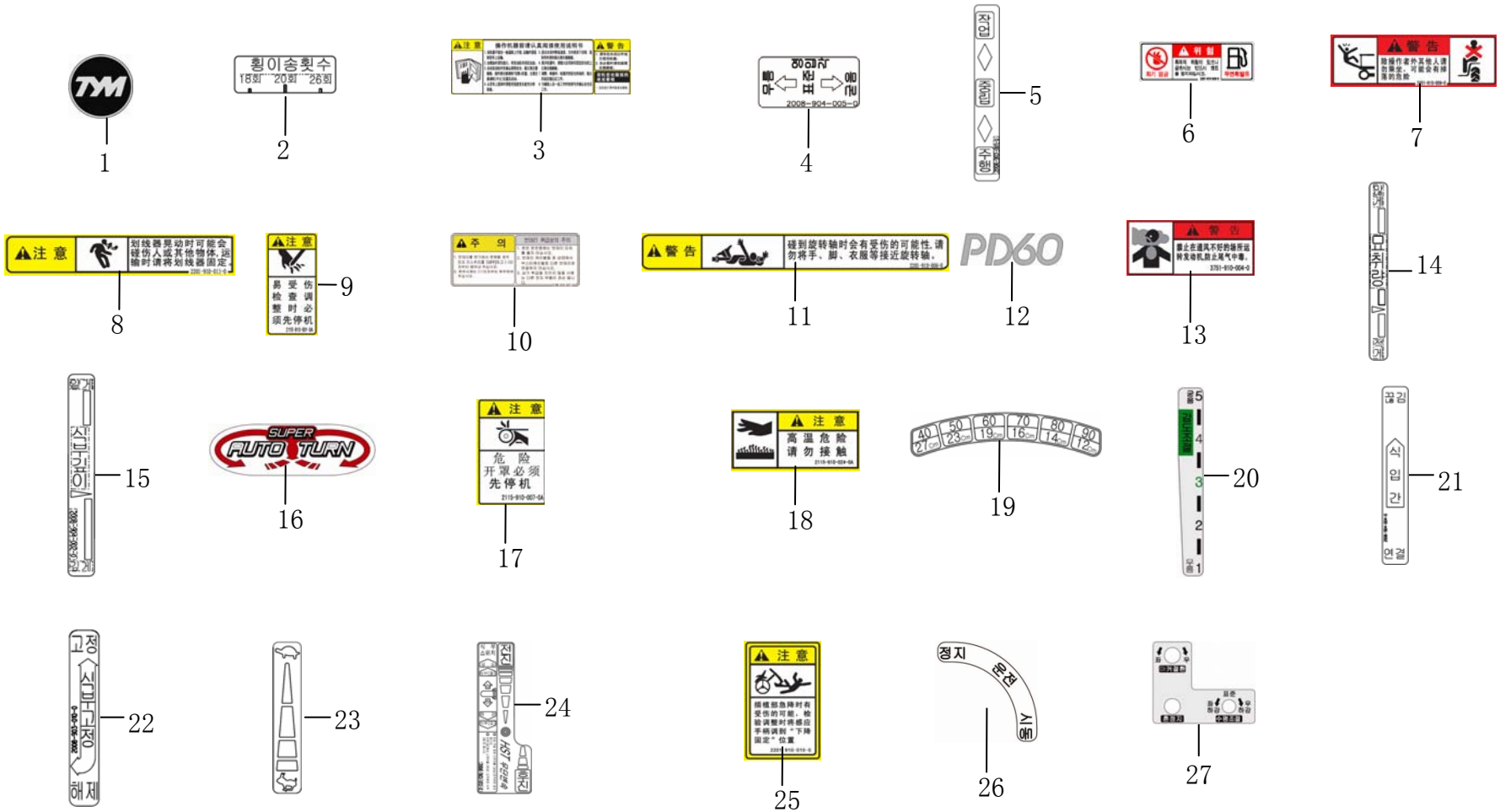

NOTE

PDF Complete
Your complimentary use period has ended. Thank you for using PDF Complete.
Click Here to upgrade to Unlimited Pages and Expanded Features

815	마크	PD60	Year / Month 2009 / 02

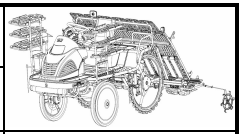

FIG.	NO.	부품번호	품명	PART NAME	수량	규격	비고	메모
815	01	19959010010	엠블럼 , TYM	EMBLEM , TYM	1			
815	02	20089040030A	라벨 , 횡이송/K	LABEL , CROSS FEED/K	1			
815	03	21869160040	라벨 , 주의/취급	LABEL , CAUTION TREATMENT	1			
815	04	20089040050A	라벨 , 영입각/K	LABEL , DEGREE/K	1			
815	05	20089030010B	라벨 , 주변속/K	LABEL , CHAGE/MAIN/K	1			
815	06	22019100060	라벨 , 위험/화기엄금	LABEL , DANGER/FIRE	1			
815	07	22019100090	라벨 , 경고/동승금지	LABEL , WARNING/RIDING	1			
815	08	22019100110	라벨 , 주의/마커	LABEL , CAUTION/MARKER	2			
815	09	22019100010	라벨 , 주의/점검	LABEL , CAUTION/CHECK	2			
815	10	21869160040	라벨 , 주의/취급	LABEL , CAUTION TREATMENT	1			
815	11	22019100060	라벨 , 위험/화기엄금	LABEL , DANGER/FIRE	1			
815	12	20089010030A	마크 , 중	MARK , CTR	2			
815	13	35529100260	라벨(경고/배기가스)	LABEL , WARNING/GAS	1			
815	14	20089040010	라벨 , 묘취량/K	LABEL , AMOUNT/SEEDLING/K	1			
815	15	20089040020C	라벨 , 깊이조절/K	LABEL , DEPTH/K	1			
815	16	20089010070	마크 , 전	MARK , FR	2			
815	17	22019100070	라벨 , 주의/벨트	LABEL , CAUTION/BELT	1			
815	18	17689100240	라벨 , 주의/소음기	LABEL , CAUTION MUFFLER	1			
815	19	20089030140C	라벨 , 주간/K	LABEL , HILL SPACE/K	1			
815	20	20089030080B	라벨 , 감지/K	LABEL , SENSITIVITY/K	1			
815	21	20089040040B	라벨 , 각조클러치/K	LABEL , CLUTCH/PLANTING/K	3			
815	22	20089030100A	라베 , 고정/K	LABEL , LOCK/K	1			
815	23	20089030060	라벨 , 스로틀	LABEL , THROTTLE	1			
815	24	20089030130B	라벨 , 포지션/K	LABEL , POSITION/K	1			
815	25	22019100100	라벨 , 주의/하강고정	LABEL , CAUTION/LOCK	1			
815	26	20089030090	라벨 , 시동스위치/K	LABEL , MAIN SWITCH/K	1			
815	27	20089030110	라벨 , 혼정지/K	LABEL , STOP/SOUND/K	1			

NOTE	

부품 색인

— 엔진

— 본기

엔진

견출번호	순	부품번호
E-6-1	1	1133ZJ1840
E-6-1	2	11381ZJ1850
E-2-1	1	11911ZJ1840
E-3-1	1	12000JZ1840
E-6-1	3	12105ZA0701
E-2-1	2	12204ZE2306
E-2-1	3	12205ZJ1405
E-9-1	1	12209ZE8003
E-2-1	4	12210ZJ1840
E-2-1	5	12216ZE2300
E-2-1	6	12220ZJ1840
E-2-1	7	12251ZJ1841
E-2-1	8	12311ZJ1840
E-2-1	9	12314ZJ1840
E-3-1	2	12356ZJ1000
E-14-2	1	12357ZJ1840
E-3-1	3	12358ZJ1000
E-3-1	4	12372ZE2300
E-2-1	10	12391ZE2020
E-9-1	17	12781ZE2000
E-8-1	1	13010ZJ1841
E-8-1	2	13101ZJ1840
E-8-1	3	13111ZJ1840
E-8-1	4	13200ZJ1841
E-7	2	13310ZJ1600
E-9-1	2	14100ZJ1842
E-9-1	3	14410ZJ1840
E-9-1	4	14431ZE2010
E-9-1	5	14451ZE1013
E-9-1	6	14568ZJ1841
E-9-1	7	14576ZJ1840
E-9-1	8	14711ZE3000
E-9-1	9	14721ZE3000
E-9-1	10	14730ZJ1841
E-9-1	11	14751ZE2003
E-9-1	12	14760ZJ1840
E-9-1	13	14764ZJ1840
E-9-1	14	14771ZE2000
E-9-1	15	14773ZE2000
E-9-1	16	14775ZE2010
E-9-1	18	14791ZE2010
E-6-1	4	15120ZJ1000
E-6-1	5	15124ZJ1003
E-6-1	6	15232ZJ1000
E-6-1	7	15348ZJ1804
E-6-1	8	15400ZJ1004
E-6-1	9	15410ZJ1800
E-6-1	10	15411ZJ1840
E-6-1	11	15427ZJ1000
E-3-1	5	15558ZJ1003

견출번호	순	부품번호
E-2-1	11	15611MB0000
E-2-1	27	15611MBO000
E-2-1	12	15625ZJ1840
E-2-1	28	15625ZJ1840
E-6-1	12	15655ZJ1861
E-14-2	2	15772551000
E-14-2	3	16010ZG8000
E-14-2	4	16011KCK910
E-14-2	5	16013ZV4005
E-14-2	6	16015ZJ1841
E-14-2	7	16016ZJ1010
E-14-2	8	16024124760
E-14-2	9	16028ZG8000
E-14-2	10	16100ZJ1841
E-14-2	11	16148141881
E-14-2	12	16150ZJ1841
E-14-2	13	16166ZJ0000
E-14-2	14	16178548004
E-14-2	15	16198ZJ1840
E-14-2	16	16200ZJ1841
E-14-2	17	16211ZJ0830
E-14-2	18	16221ZJ1840
E-22-4	1	16263883W10
E-22-4	2	16500ZJ1890
E-6-1	13	16510ZJ1840
E-6-1	14	16511ZJ1840
E-6-1	15	16512ZJ1840
E-6-1	16	16513ZE2000
E-6-1	17	16531ZE2000
E-22-4	3	16534ZJ1840
E-3-1	6	16541ZJ1840
E-22-4	4	16550ZJ1840
E-22-4	5	16555ZJ1840
E-29	7	16561ZJ1850
E-22-4	6	16561ZJ1860
E-22-4	7	16562ZJ1840
E-22-4	8	16576891000
E-22-4	9	16584883300
E-22-4	10	16592ZJ1000
E-22-4	11	16594883010
E-22-4	12	16599ZG1M10
E-22-4	13	16611ZJ1840
E-22-4	14	16617ZJ1840
E-18-1	1	16700ZL8003
E-18-1	2	16711ZJ1840
E-12-1	1	16715ZJ1840
E-12-1	2	16715ZJ1850
E-18-1	3	16850ZJ1840
E-18-1	4	16852ZJ1840
E-18-1	15	16852ZJ1850

견출번호	순	부품번호
E-18-1	5	16882ZJ1840
E-18-1	6	16910ZE8015
E-18-1	16	16910ZE8015
E-18-1	21	16910ZE8015
E-2-1	13	17101ZJ1840
E-2-1	14	17151ZJ1841
E-15-4	1	17210ZJ1841
E-15-4	2	17218ZJ1840
E-15-4	3	17219ZJ1840
E-15-4	4	17220ZN1800
E-15-4	5	17222ZJ1840
E-15-4	6	17224ZJ1840
E-14-2	19	17228ZG8003
E-15-4	7	17229ZJ1840
E-15-4	8	17229ZN1000
E-15-4	9	17230ZJ1840
E-15-4	10	17233ZJ1840
E-15-4	11	17234ZJ1840
E-15-4	12	17238ZJ4830
E-15-4	13	17251ZJ1840
E-14-2	20	17410ZJ1840
E-15-4	14	17415ZJ1840
E-15-4	15	17416ZN1000
E-22-4	17	17957ZV4000
E-2-1	15	18333ZE3800
E-18-1	7	19111MF5000
E-12-1	3	19611ZJ1860
E-12-1	6	19612ZJ1840
E-12-1	7	19614ZJ1840
E-12-1	8	19631ZJ1840
E-12-1	9	19632ZJ1840
E-2-1	16	19682JZ1840
E-3-1	7	25523VD6010
E-21-1	1	30201PH9004
E-21-1	2	30202PZ1003
E-20	1	30500ZJ1013
E-20	2	30518ZJ1841
E-14-2	29	30519ZJ1840
E-20	3	30550ZJ1000
E-20	4	30700ZJ1003
E-21-1	3	31200ZJ1841
E-21-1	4	31203PH9004
E-21-1	5	31204ZJ1H01
E-21-1	6	31206ZG4801
E-21-1	7	31207ZJ1H01
E-21-1	8	31211PH9004
E-21-1	9	31212PH9004
E-21-1	10	31213P64N01
E-21-1	11	31214PH9004
E-21-1	12	31216ZJ1H01

견출번호	순	부품번호
E-21-1	13	31220PH9004
E-21-1	14	31223PA0006
E-21-1	15	31231PH9004
E-21-1	16	31233PH9004
E-21-1	17	31234ZJ1H01
E-3-1	8	31511ZJ1000
E-23	3	31620ZG5003
E-20	5	31630ZJ1003
E-20	6	31630ZJ1801
E-20	7	31740ZJ1003
E-12-1	13	32103ZG8000
E-23	6	32105ZJ1800
E-20	16	32763PA0000
E-12-1	14	33713GC2000
E-12-1	15	34150ZJ1841
E-3-1	9	35480ZJ1841
E-3-1	10	37240ZG3E01
E-6-1	18	37240ZG3E01
E-20	8	63312ZA7000
E-12-1	16	80101310000
E-28-1	1	87101ZJ1840
E-28-1	17	87106737J00
E-28-1	25	87135ZE2000
E-28-1	18	87150ZH8000
E-28-1	4	87152ZJ1000
E-28-1	12	87168ZC3630
E-28-1	5	87516YE9660
E-28-1	11	87522883660
E-28-1	23	87526ZH8000
E-28-1	6	87530ZL8820
E-28-1	7	87532ZH8810
E-28-1	8	87532ZJ1840
E-28-1	19	87539737J00
E-28-1	13	87539ZC6650
E-28-1	14	87539ZC6650
E-28-1	20	87561733J00
E-28-1	15	87561880600
E-28-1	16	87563ZB4630
E-28-1	21	87565ZA7000
E-28-1	22	87565ZB4A00
E-28-1	24	87594ZB4620
E-29	1	89216ZB4000
E-29	2	89218ZE1000
E-29	3	89219805000
E-8-1	6	90001ZN1000
E-3-1	11	90002ZG5004
E-6-1	19	90002ZG5004
E-15-4	16	90002ZJ1840
E-7	6	90003ZE3600
E-9-1	19	90005896000

견출번호	순	부품번호
E-2-1	17	90011ZJ1841
E-9-1	20	90012ZE0010
E-12-1	17	90013883000
E-2-1	19	90014952000
E-18-1	8	90014952000
E-22-4	18	90014952000
E-2-1	18	90014ZE2000
E-20	9	90014ZE6000
E-6-1	20	90015883000
E-22-4	19	90015ZE3790
E-6-1	21	90018PN3000
E-12-1	18	90018ZE1000
E-2-1	20	90018ZJ1840
E-3-1	12	90029888000
E-3-1	13	90031ZE1000
E-20	10	90031ZE1000
E-20	12	90031ZE1000
E-12-1	19	90042ZJ1840
E-20	11	90121952000
E-15-4	17	90133SG0003
E-9-1	21	90206ZE1000
E-12-1	20	90313ZJ1840
E-14-2	21	90314ZJ1840
E-2-1	21	90441ZE2010
E-9-1	22	90446357000
E-7	7	90471ZE3000
E-6-1	22	90473147000
E-6-1	23	90602ZE1000
E-9-1	23	90602ZE1000
E-22-4	20	90605230000
E-18-1	9	90617SA0003
E-18-1	17	90617SA0003
E-18-1	18	90617SA0003
E-20	13	90673GJ5003
E-14-2	22	90682959661
E-9-1	24	90702GB6910
E-7	5	90745ZE2600
E-15-4	18	90852898000
E-3-1	14	91001ZJ1841
E-21-1	18	91002ZG4801
E-3-1	15	91002ZJ1841
E-3-1	16	91201ZE9003
E-3-1	17	91201ZJ1841
E-6-1	24	91202ZJ1841
E-3-1	18	91302MB6830
E-6-1	25	91302ZE9003
E-3-1	19	91353671004
E-14-2	23	91402ZJ1841
E-20	14	91504750003
E-15-4	19	91552898000

견출번호	순	부품번호
E-12-1	21	91558SD5003
E-18-1	10	91601ZJ1840
E-22-4	21	92301040060H
E-22-4	22	92301050160A
E-22-4	23	92301050250A
E-3-1	20	9280014000
E-22-4	24	93500050250A
E-22-4	25	93500050350A
E-14-2	24	938920401418
E-14-2	25	938920501218
E-18-1	11	938940601600
E-12-1	23	9391325580
E-21-1	19	94001082000S
E-12-1	24	9405005000
E-12-1	25	9405006000
E-22-4	26	9405006000
E-2-1	22	9405008000
E-3-1	21	9405010000
E-6-1	26	9410106800
E-9-1	25	9410106800
E-3-1	22	9410208800
E-15-4	20	9410308900
E-3-1	23	9410914000
E-21-1	20	9411108000
E-3-1	24	9425108000
E-6-1	27	9430108140
E-21-1	21	9430110120
E-2-1	23	9430112200
E-9-1	26	9430560282
E-8-1	7	9460118000
E-18-1	22	950014505540
E-18-1	23	950015503040
E-14-2	26	9500202080
E-18-1	12	9500202080
E-18-1	19	9500202080
E-18-1	24	9500202080
E-18-1	13	9500202100
E-18-1	20	9500202100
E-18-1	14	9500250000
E-18-1	25	95003250032C
E-15-4	21	9501858250
E-12-1	27	957010600800
E-20	15	957010600800
E-6-1	28	957010602000
E-15-4	22	957010602000
E-9-1	27	957010602500
E-15-4	23	957010602800
E-3-1	25	957010607509
E-2-1	24	957010802000
E-6-1	29	957010805000

图 号	序号	件 号
E-21-1	22	957010811000
E-2-1	25	957011008000
E-14-2	27	958010612000
E-3-1	26	961406003010
E-6-1	30	9621112000
E-6-1	31	966000601600
E-2-1	26	9807952876
E-29	4	9900110120
E-29	5	9900114170
E-29	6	9900802300
E-14-2	28	99201ZG81000

图 号	序号	件 号

图 号	序号	件 号

본기

견출번호	순	부품번호
204	16	13022250030
207	25	13022250030
606	02	13262170030
117	16	13606212000
801	09	14166000570
403	02	15184322500
101	02	20081010022
105	01	20081050011
105	17	20081050060
105	05	20081050080
105	07	20081050090
105	12	20081052301
111	01	20081110011
111	04	20081110070
111	05	20081110080
112	12	20081120021
112	15	20081120060
112	13	20081120070
112	14	20081120080
112	01	20081122801
112	06	20081122900
201	01	20082010012
201	14	20082010022
202	05	20082022100
324	08	20082022120
327	11	20082022120
202	07	20082022140
203	02	20082030021
203	05	20082030040
203	04	20082030051
204	02	20082040121
205	02	20082050020
205	03	20082050030
205	04	20082050040
205	14	20082060010
205	16	20082060020
321	03	20082060020
207	10	20082070091
208	05	20082080041
213	06	20082100032
705	14	20082100040
211	10	20082100040
213	08	20082100040
308	17	20082100040
420	04	20082100040
333	07	20082100040
712	10	20082100040
204	04	20082102101
211	13	20082110010
211	05	20082112301

견출번호	순	부품번호
211	03	20082112400
213	12	20082130020
213	10	20082130030
252	17	20082130060
213	01	20082132201
214	06	20082140011
214	09	20082140032
214	05	20082140051
214	07	20082140060
214	02	20082140070
214	04	20082140090
214	18	20082142400
526	02	20082153200
230	05	20082300010
230	15	20082310030
230	02	20082320021
230	04	20082320030
308	03	20082410010
333	05	20082410010
333	12	20082412101
333	10	20082412600
250	01	20082502200
252	09	20082513001
252	16	20082520030
252	01	20082523201
252	10	20082523302
301	10	20083012611
301	08	20083020040
301	14	20083032100
307	08	20083070010
308	14	20083080041
214	01	20083100021
311	14	20083100030
311	16	20083100040
201	09	20083100050
311	13	20083100061
311	01	20083110021
311	08	20083110030
311	03	20083110040
311	06	20083110050
201	12	20083120010
322	02	20083200022
322	05	20083200050
320	18	20083200071
320	04	20083200081
321	01	20083210010
322	01	20083220030
321	06	20083240010
324	04	20083240030
327	04	20083240030

견출번호	순	부품번호
324	03	20083240070
327	03	20083240070
324	06	20083242200
327	06	20083242200
324	07	20083242210
327	12	20083242210
324	09	20083242220
327	10	20083242220
324	10	20083242230
324	11	20083242240
327	09	20083242240
325	01	20083250010
327	16	20083310010
331	07	20083312000
333	04	20083332201
333	21	20083340020
333	20	20083342201
352	07	20083520010
352	03	20083520020
250	13	20084012101
250	15	20084020010
250	03	20084020040
402	07	20084022130
403	15	20084030020
420	15	20084050010
415	10	20084062300
402	20	20084062400
408	19	20084080020
408	03	20084082262
408	02	20084082273
408	09	20084082280
408	16	20084082301
408	15	20084082800
415	02	20084152303
415	06	20084162200
701	09	20084200020
420	30	20084200021
420	34	20084202400
526	16	20084202400
420	19	20084202702
420	32	20084202902
420	25	20084203002
609	09	20084220050
420	11	20084220102
705	15	20084220130
420	12	20084220130
420	26	20084222202
420	05	20084223002
420	08	20084223602
501	01	20085012102

견출번호	순	부품번호
501	06	20085012700
502	08	20085022601
502	07	20085022701
503	05	20085030032
503	10	20085032201
505	02	20085050071
506	08	20085060041
511	02	20085110010
511	01	20085112100
511	04	20085112201
523	02	20085230010
523	01	20085232101
525	02	20085250030
525	05	20085252100
525	06	20085252200
420	29	20085260030
701	10	20085260030
526	06	20085260111
526	05	20085260121
526	22	20085260141
420	35	20085263401
526	04	20085264101
526	07	20085270030
807	02	20085270051
807	01	20085270061
531	01	20085312200
532	01	20085320010
801	04	20085330010
801	11	20085330021
506	05	20085332100
801	06	20085332400
812	01	20085342400
705	02	20085373000
333	24	20085383100
333	23	20085384100
582	04	20085820010
582	03	20085820040
707	03	20085820040
582	01	20085822101
582	02	20085822201
328	02	20086010050
603	09	20086030030
605	08	20086050020
605	05	20086050030
605	07	20086050042
605	03	20086050051
606	01	20086060010
606	04	20086060041
608	06	20086080021
608	08	20086080030

견출번호	순	부품번호
608	05	20086080060
608	04	20086080070
608	10	20086080080
608	13	20086082203
207	20	20086090010
609	06	20086090010
612	01	20086120011
612	12	20086130010
612	15	20086130030
612	10	20086132100
701	13	20087010051
701	02	20087012203
701	18	20087030020
704	07	20087042103
704	14	20087042301
704	10	20087042503
705	11	20087050050
705	04	20087050060
705	08	20087050071
705	16	20087050080
705	12	20087052202
707	08	20087070030
704	02	20087090010
611	10	20087090020
704	05	20087090040
711	10	20087110030
723	11	20087110030
711	05	20087110040
721	10	20087120031
712	09	20087120040
712	14	20087120060
716	04	20087120060
712	20	20087120070
716	08	20087120070
712	07	20087122401
615	12	20087170040
723	12	20087230032
723	08	20087230040
723	07	20087232204
801	01	20088012101
801	21	20088012300
803	03	20088030031
803	10	20088030050
803	09	20088030060
803	01	20088030080
805	09	20088030160
805	10	20088030170
803	02	20088032200
804	03	20088040012
801	20	20088040090

견출번호	순	부품번호
806	12	20088050050
806	05	20088070010
815	23	20089030060
815	23	20089030060
201	18	21111012100
204	17	21111070040
207	26	21111070040
815	09	21159100010
601	03	21306010180
609	08	21306010180
717	11	21306010180
806	06	21306010180
612	08	21307322050
801	23	21328012201
612	16	21427280020
301	05	21443012000
214	14	21444190201
208	03	21444190210
601	05	21454200010
611	15	21457510030
307	07	21463023100
612	14	21466130011
810	08	21467110020
612	09	21557032101
721	05	21567380020
612	18	21567382001
612	17	21567392001
721	11	21568050560
525	04	21615250020
701	04	21736080200
603	08	27041020091
611	14	27041020091
807	03	27231030010
615	05	27231030010
707	05	27231030010
320	14	32073010160
532	04	34522832000
111	08	34523102202
208	02	35554040140
403	12	35605033020
801	19	35605033020
213	03	36402200040
105	18	36542330060
105	09	36757200021
605	11	37502510230
105	03	37613420080
701	07	37613420080
583	02	37621742000
402	25	37681850160
615	08	39081700200

견출번호	순	부품번호
701	16	39081700200
707	07	39081700200
712	15	39081700200
716	06	39081700200
717	06	39081700200
415	07	41061020280
105	20	13524040040
505	03	13766010031
712	18	13766010031B
111	11	14501410050
351	08	14886070030
403	10	15605ZN1000
117	14	15606642401
505	10	16996043100A
815	18	17689100240
112	02	18333ZB7800
506	02	19959010010
815	01	19959010010
815	01	19959010010
101	05	20081012200C
101	01	20081013100
105	11	20081013160
105	04	20081013180
101	06	20081020010
105	06	20081050030B
105	02	20081050040
105	10	20081050110A
105	13	20081052101A
111	10	20081110020
111	16	20081110030D
111	13	20081110040C
111	12	20081110070
111	02	20081112200B
403	09	20081112601
112	10	20081120030A
112	11	20081120040
112	04	20081120050
112	07	20081122201B
112	05	20081122402B
809	01	20081170010C
809	02	20081170020D
809	03	20081170030A
333	16	20081170050
117	09	20081172300D
117	08	20081172402
117	11	20081172402
333	13	20081172600
201	17	20082010030A
202	01	20082020010C
202	03	20082020020A

견출번호	순	부품번호
202	02	20082020030A
202	13	20082020040D
202	18	20082020060B
202	11	20082022110A
202	10	20082022120A
202	09	20082022130A
327	08	20082022140
202	08	20082022150A
203	01	20082030010A
203	06	20082030030A
204	01	20082040010A
204	05	20082040020A
204	06	20082040030B
204	07	20082040040B
204	08	20082040050B
204	09	20082040060B
204	10	20082040070B
204	11	20082040080A
204	12	20082040090B
204	13	20082040110B
205	01	20082050010E
205	05	20082050050A
205	06	20082050060A
205	12	20082050080B
205	09	20082050090A
205	10	20082050110A
207	01	20082070010F
207	03	20082070020C
207	04	20082070030B
207	05	20082070040B
207	06	20082070050C
207	07	20082070060C
207	08	20082070070C
207	09	20082070080A
208	01	20082080010B
208	04	20082080030C
207	16	20082090030A
207	17	20082090040A
207	15	20082090110A
207	14	20082090210A
207	19	20082092100B
211	07	20082100050
211	01	20082110021
211	11	20082110030B
532	03	20082110041
211	12	20082112200F
208	13	20082130010D
213	11	20082132300F
213	04	20082132400A
214	08	20082140020A

견출번호	순	부품번호
202	14	20082140040B
309	03	20082140040B
331	03	20082140040B
214	10	20082140040B
214	16	20082142200C
214	13	20082142300B
230	10	20082310010B
230	11	20082310020A
230	01	20082320010C
202	17	20082402400A
333	08	20082412200A
333	02	20082412300A
403	03	20082510020C
251	21	20082510030A
251	18	20082510040B
251	09	20082510060A
251	01	20082512203
403	01	20082512700D
251	24	20082512902
251	16	20082513102B
251	19	20082513301C
251	05	20082514012
251	04	20082514022
252	05	20082520011
250	04	20082522200E
301	03	20083010010A
301	17	20083012200
301	13	20083012310B
301	02	20083012402A
301	01	20083020010D
301	07	20083022200B
301	09	20083022220A
250	16	20083030010A
402	18	20083030010A
307	04	20083072200C
307	05	20083072300C
307	01	20083073000C
308	06	20083080010B
308	16	20083080030A
308	02	20083082200C
308	01	20083082300A
308	08	20083082400C
201	03	20083100011A
201	15	20083100071A
201	10	20083110010C
201	16	20083110060B
201	08	20083110110A
311	17	20083120020B
311	18	20083120030A
320	01	20083200012A

견출번호	순	부품번호
322	03	20083200060A
328	09	20083210021A
328	10	20083210030A
322	08	20083222100B
322	07	20083222300B
320	19	20083230010C
320	12	20083230020C
320	16	20083230030A
320	20	20083233200B
327	05	20083240020A
324	05	20083240040A
324	14	20083240060A
327	14	20083240060A
309	02	20083242300A
325	02	20083250020A
325	04	20083260010B
325	05	20083260020B
331	11	20083312010
331	10	20083312020
331	09	20083312030
331	08	20083312040
331	05	20083320020A
331	01	20083322100C
333	19	20083330010
333	17	20083330051
333	18	20083332400D
333	01	20083332600B
351	07	20083510010A
351	03	20083510020
351	01	20083512101
351	02	20083512201
352	01	20083522101
352	02	20083522201
402	04	20084020010
402	26	20084020050C
402	32	20084020060D
402	30	20084020070B
402	37	20084020080D
402	31	20084020090D
402	33	20084020100B
402	36	20084020110B
250	09	20084020120C
402	29	20084020130D
402	28	20084020140D
402	27	20084020170
402	35	20084020180B
402	34	20084020190A
402	05	20084022600
420	16	20084050030A
420	14	20084052300B

견출번호	순	부품번호
415	17	20084060011A
415	12	20084060021
402	21	20084060030A
402	22	20084060040A
415	13	20084060110
333	11	20084060110
415	14	20084060120
408	17	20084080040C
408	18	20084080050B
415	01	20084080070B
408	10	20084082290A
408	01	20084082600C
408	11	20084082700C
415	03	20084152202A
415	08	20084172104A
415	15	20084172200
415	21	20084200021
252	13	20084200040A
420	21	20084200040A
420	33	20084200050
420	22	20084200060
420	24	20084200120C
420	01	20084202202A
811	03	20084220021A
117	04	20084220033
811	01	20084220070D
811	02	20084220080D
420	39	20084220090B
420	23	20084220112
117	07	20084222600F
117	02	20084222700G
420	02	20084222903A
501	02	20085012300E
117	01	20085012401B
501	04	20085012600B
502	01	20085022102A
502	06	20085022800E
502	02	20085022900D
503	02	20085030020B
503	01	20085032101A
505	09	20085050012
505	11	20085050020C
505	12	20085050030C
505	01	20085052102
505	14	20085052201
506	07	20085060010C
506	11	20085060031
506	17	20085060050B
301	16	20085060060A
506	01	20085060070C

견출번호	순	부품번호
506	12	20085060110A
506	13	20085060120
251	08	20085112601
505	07	20085112700
503	07	20085122202A
503	11	20085122302A
525	01	20085250010A
525	07	20085250050
415	22	20085260030
526	14	20085260090A
526	21	20085260130A
526	01	20085263701C
526	15	20085263801A
526	11	20085263901A
526	17	20085270040A
531	01	20085312100
531	05	20085312300
531	05	20085312300
531	04	20085312400
531	04	20085312400
531	08	20085312701
531	08	20085312701
532	08	20085320030A
101	11	20085320040A
532	09	20085320060A
532	02	20085321100A
531	06	20085322100
531	06	20085322100
531	07	20085332200
531	07	20085332200
251	03	20085332200
813	01	20085342102B
814	01	20085342200B
117	17	20085342300
251	12	20085373000
531	09	20085383300
531	09	20085383300
251	02	20085402130
511	06	20085402201A
583	01	20085822700B
582	07	20085822902A
328	01	20086010011A
328	08	20086010020C
601	06	20086012300A
328	04	20086012400B
603	01	20086030010D
603	03	20086030020B
605	14	20086040010B
605	01	20086050012B
605	06	20086050060B

견출번호	순	부품번호
208	06	20086050070B
605	04	20086050070B
605	02	20086050090A
606	05	20086060020A
606	03	20086060030A
606	07	20086072111B
608	01	20086080050A
608	14	20086082300D
608	12	20086082400B
605	09	20086092100B
609	01	20086092200A
609	03	20086092300C
610	02	20086100010B
610	04	20086102100B
610	01	20086102201B
611	01	20086110010E
611	09	20086110020B
612	11	20086110030A
611	08	20086110080B
612	07	20086120020A
612	13	20086130020A
611	04	20086140010D
808	02	20086150011A
615	04	20086150030C
615	06	2008615004C
615	09	20086150050D
701	03	20086150070A
615	10	20086150080C
808	03	20086150090
808	01	20086150110F
615	01	20086152100C
701	01	20087010012B
701	06	20087012102C
701	14	20087012300A
701	17	20087030030B
704	09	20087042203A
704	18	20087042400C
705	01	20087052101B
705	05	20087052402A
707	04	20087072300B
707	01	20087072700A
707	11	20087072800A
707	12	20087073200B
707	10	20087073300B
704	01	20087092100C
704	06	20087092200C
711	08	20087110010A
711	02	20087110020B
711	01	20087112103B
711	04	20087112204A

견출번호	순	부품번호
712	01	20087120011A
712	05	20087120021A
712	13	20087120051A
811	04	20087120080B
712	16	20087120080B
712	03	20087122100C
712	04	20087122200E
712	19	20087122301A
712	06	20087122500C
712	11	20087122600C
717	04	20087160020B
716	03	20087162100C
716	07	20087162200A
717	01	20087170010A
717	09	20087170030A
717	02	20087172200A
717	07	20087172300A
611	12	20087172400A
721	01	20087210010C
723	04	20087220010B
723	06	20087220020A
723	05	20087222101A
723	02	20087230010A
723	01	20087232103A
801	02	20088010010A
801	16	20088010030B
804	06	20088022100A
804	07	20088022200E
803	04	20088030010B
805	01	20088030020B
803	06	20088030040C
805	04	20088030070B
803	11	20088030110D
805	08	20088030130A
805	06	20088030140B
805	05	20088030150A
803	08	20088032400B
805	03	20088032700E
810	01	20088040050F
805	07	20088040060A
810	03	20088040070F
810	02	20088040080A
804	01	20088042201B
810	04	20088042600B
806	01	20088060010B
806	03	20088060020C
806	04	20088060030B
806	11	20088060040B
806	10	20088062300F
806	07	20088062700C

견출번호	순	부품번호
815	12	20089010030A
815	12	20089010030A
815	16	20089010070
815	16	20089010070
815	05	20089030010B
815	27	20089030070
815	20	20089030080B
815	26	20089030090
815	22	20089030100A
815	27	20089030110
815	24	20089030130B
815	19	20089030140C
815	19	20089030140C
815	05	20089030300B
815	20	20089030360B
815	25	20089030370
815	22	20089030380
815	24	20089030410C
815	14	20089040010
815	15	20089040020C
815	02	20089040030A
815	21	20089040040B
815	04	20089040050A
815	14	20089040110B
815	15	20089040120C
815	02	20089040130A
815	04	20089040140A
815	21	20089040150B
815	03	20089100010
815	10	20089100010
815	07	20089100050
815	26	20089100060
815	08	20089100110
111	07	21005020063
815	06	21159010380
815	11	21159010380
815	17	21159100070
815	18	21159100240
207	22	21306010180
214	15	21306010180
251	11	21306010180
308	11	21306010180
328	07	21306010180
808	04	21306010180
811	06	21306010180
809	05	21306010180
810	11	21306010180
117	10	21307130030A
251	25	21307130030A
583	04	21307130030A

견출번호	순	부품번호
250	12	21324090040A
403	05	21324090040A
505	06	21325640011C
801	13	21328010020A
801	12	21348010011A
601	04	21444190132G
308	09	21444190201B
328	06	21444190201B
601	02	21444190201B
601	01	21444192201D
605	13	21446040020B
605	17	2144604003A
612	04	21447010031C
612	02	21447010041A
612	03	21447020022F
331	12	21453352450
207	18	21457510030
204	14	21457510030A
208	14	21457510030A
603	07	21457510030A
701	21	21466400014C
716	01	21466600014G
721	12	21568050122B
721	03	21568050521B
721	08	21568050531B
721	04	21568050540A
721	09	21568050550A
525	03	21615250010B
815	03	21869160040
815	10	21869160040
815	09	22019100010
815	06	22019100060
815	11	22019100060
815	17	22019100070
815	07	22019100090
815	25	22019100100
815	08	22019100110
608	07	27063010300D
111	06	27065010041
117	15	34521014000
333	27	34522860060
403	04	34523700050
402	10	34523700050
402	01	35523542500
815	13	35529100260
506	14	35605033020
582	06	35605033020
333	26	35605033020
402	03	36263700050
402	24	36313502011C

견출번호	순	부품번호
211	04	36402200040
252	07	36402200040
252	02	36402200050
402	02	36753542412
505	15	37371540030A
252	04	37471550110
815	13	37519100040
420	17	37681850221A
214	17	39081700200
308	13	39081700200
807	06	39081700200
810	09	39081700200
505	05	41061020280
320	09	79542051010C
201	13	79552010260A
250	10	79552010260A
320	13	79552010260A
403	06	79552010260A
101	04	92800140000
101	03	94109140000
251	14	V1112603016
721	13	V1122604012
701	12	V1122604016
721	02	V1127006020
705	03	V1222603020
251	17	V1222603020
526	03	V1222603020
415	24	V1222604016
420	31	V1222604016
532	05	V1222604030
801	24	V1222604030
251	06	V1222605008
506	09	V1222605020
503	03	V1222605035
251	07	V1922604012
531	03	V1922604020
531	03	V1922604020
420	09	V2003606025
420	27	V2003606030
320	15	V2013608016
307	03	V2013608030
320	07	V2013610040
101	10	V2013610045
804	10	V2013610080
333	25	V2053606040
309	04	V2103606016
331	04	V2103606016
214	11	V2103606016
250	11	V2113606012
420	13	V2113606012

견출번호	순	부품번호
711	03	V2113606012
804	02	V2113606012
805	02	V2113606012
202	15	V2113606016
214	19	V2113606016
582	05	V2113606016
403	07	V2113606016
402	09	V2113606016
526	23	V2113606016
608	11	V2113606016
615	03	V2113606016
801	17	V2113606016
806	02	V2113606016
105	08	V2113606020
112	09	V2113606020
403	11	V2113606030
402	23	V2113606030
603	04	V2113606030
611	11	V2113606030
723	03	V2113606030
806	13	V2113606030
806	08	V2113606060
801	18	V2113606065
609	02	v2113608016
615	02	v2113608016
801	05	V2113608016
531	10	V2123606016
531	10	V2123606016
117	18	V2123606016
506	06	V2123606016
717	08	V2123606016
801	22	V2123606016
526	20	V2123606025
511	07	V2123606030
420	38	V2123606035
322	09	V2173608016
207	23	V2173608016
301	11	V2173608016
705	17	V2173608016
511	03	V2173608016
501	03	V2173608016
328	05	V2173608016
503	09	V2173608016
402	06	V2173608016
603	10	V2173608016
611	05	v2173608016
615	13	V2173608016
704	19	V2173608016
707	02	V2173608016
301	12	V2173608020

견출번호	순	부품번호
352	08	V2173608020
351	09	V2173608020
502	09	V2173608020
501	05	V2173608020
117	03	V2173608020
111	15	V2173608020
251	20	V2173608020
211	06	V2173608020
213	05	V2173608020
252	08	V2173608020
408	12	V2173608020
415	09	V2173608020
420	18	V2173608020
503	08	V2173608020
505	08	V2173608020
582	09	V2173608020
112	08	V2173608020
608	02	V2173608020
615	11	v2173608020
704	08	V2173608020
712	02	V2173608020
716	02	V2173608020
707	09	V2173608025
201	04	V2173608030
201	05	V2173608030
301	15	V2173608030
320	06	V2173608030
603	11	V2173608030
320	17	V2173608040
611	13	V2173608040
523	03	V2173608060
250	07	V2173608080
250	06	V2173608140
502	04	V2173610020
502	03	V2173610025
320	05	V2173610025
402	15	V2173610025
502	05	V2173610030
701	08	V2173610030
402	17	V2173610040
402	11	V2173610100
111	03	V2183608020
251	15	V2183608020
503	06	V2183608020
505	13	V2183608020
532	07	V2183608020
403	08	V2183608020
711	09	V2183608020
717	03	V2183608020
723	13	V2183608020

견출번호	순	부품번호
801	03	V2183608020
502	10	V2183608035
250	18	V2205408095
111	09	V2402605016
112	16	V2402606012
420	10	V3002600060
506	16	V3002600060
810	05	V3002600060
415	11	V3002600080
721	07	V3007000060
403	14	V3042600060
801	15	V3042600060
307	02	V3042600080
523	05	V3042600080
117	13	V3042600080
105	19	V3042600080
111	14	V3042600080
251	23	V3042600080
211	02	V3042600080
213	02	V3042600080
252	06	V3042600080
308	15	V3042600080
420	37	V3042600080
333	22	V3042600080
112	03	V3042600080
526	19	V3042600080
701	20	V3042600080
704	13	V3042600080
801	08	V3042600080
804	09	V3042600080
352	05	V3042600100
351	05	V3042600100
101	09	V3042600100
251	27	V3042600100
320	08	V3042600100
415	20	V3042600100
583	05	V3042600100
333	09	V3042600100
402	14	V3042600100
526	10	v3042600100
704	17	V3042600100
804	12	v3042600100
307	06	V3042600140
301	20	V3232600120
307	11	V3342600140
408	20	V3342600140
408	08	V3343600120
506	04	V3612600060
525	08	V3612600080
211	08	V3612600080

견출번호	순	부품번호
213	09	V3612600080
532	06	V3802600040
801	25	V3802600040
503	04	V3802600050
506	10	V3802600050
582	08	V3802600050
415	23	V3802600060
420	28	V3802600060
701	11	V3802600060
801	10	V3802600060
806	09	V3802600060
252	03	V3802600080
506	15	V4011600060
403	13	V4011600060
801	14	V4011600060
250	17	V4011600080
420	36	V4011600080
505	04	V4011600080
526	18	V4011600080
704	12	V4011600080
712	17	V4011600080
801	07	V4011600080
804	08	V4011600080
352	04	V4011600100
351	04	V4011600100
101	08	V4011600100
415	19	V4011600100
402	13	V4011600100
526	09	V4011600100
704	16	V4011600100
301	19	V4011600120
408	07	V4011600120
721	06	V4017000060
705	09	V4111000060
506	03	V4111000060
705	06	V4111000080
705	13	V4111000100
101	07	V4111000100
420	03	V4111000100
213	13	V4111000120
251	13	V4111600030
531	02	V4111600040
531	02	V4111600040
207	21	V4111600060
251	10	V4111600060
308	10	V4111600060
420	06	V4111600060
808	05	V4111600060
811	05	V4111600060
809	04	V4111600060

견출번호	순	부품번호
810	10	V4111600060
609	07	V4111600060
717	10	V4111600060
523	04	V4111600080
117	12	V4111600080
251	22	V4111600080
308	12	V4111600080
333	14	V4111600080
807	04	V4111600080
810	06	V4111600080
609	04	V4111600080
615	07	V4111600080
701	15	V4111600080
701	19	V4111600080
704	11	V4111600080
707	06	V4111600080
712	12	V4111600080
716	05	V4111600080
717	05	V4111600080
804	04	V4111600080
117	05	V4111600100
251	26	V4111600100
211	09	V4111600100
213	07	V4111600100
252	14	V4111600100
308	04	V4111600100
415	18	V4111600100
583	03	V4111600100
333	06	V4111600100
402	12	V4111600100
526	08	V4111600100
704	15	V4111600100
712	08	V4111600100
804	11	V4111600100
301	18	V4111600120
252	11	V4111600120
308	07	V4111600120
415	16	V4111600120
420	20	V4111600120
526	12	V4111600120
307	09	V4111600140
105	14	V4111600160
415	04	V4111600160
711	06	V4111600180
723	09	V4111600180
704	03	V4111600220
252	15	V5001920020
117	06	V5001925020
420	07	V5001925020
810	07	V5001925020

견출번호	순	부품번호
609	05	V5001925020
804	05	V5001925020
301	21	V5001925025
251	28	V5001925025
252	12	V5001925025
308	05	V5001925025
333	15	V5001925025
807	05	V5001925025
809	06	V5001925025
526	13	V5001925025
415	05	V5001925030
704	04	V5001925030
352	06	V5001930020
351	06	V5001930020
803	12	V5001930020
307	10	V5001930025
331	06	V5001930025
105	15	V5001930025
711	07	V5001930025
723	10	V5001930025
803	05	V5001930025
610	03	V5001930035
301	06	V5201005025
201	07	V5201008014
320	03	V5201008014
320	11	V5211008040
705	10	V5601600006
705	07	V5601600008
511	05	V5601600010
213	14	V5601600012
803	07	V5801403018
205	08	V5801403025
603	02	V5801404520
611	06	V5801404520
205	07	V5801405025
250	05	V5801406028
333	03	V5801406028
611	07	V5801406028
608	03	V6001106001
606	06	V6001106002
230	12	V6001106003
605	10	V6001106003
612	06	V6001106003
203	07	V6001106004
324	15	V6001106004
327	15	V6001106004
202	12	V6001106005
207	13	V6001106005
230	07	V6001106005
311	04	V6001106006

견출번호	순	부품번호
324	13	V6001106006
327	13	V6001106006
701	05	V6001106006
205	11	V6001106007
208	07	V6001106007
205	13	V6001106010
207	12	V6001106201
202	04	V6001106203
203	03	V6001106203
204	03	V6001106203
230	13	V6001106203
311	19	V6001106203
324	01	V6001106203
327	01	V6001106203
230	03	V6001106204
311	10	V6001106204
205	15	V6001106205
311	02	V6001106205
321	02	V6001106205
325	03	V6001106205
321	07	V6001106206
325	06	V6001106206
325	08	V6001106208
605	15	V6001106303
208	10	V6001106305
311	07	V6001106306
328	03	V6001506002
311	12	V6701000030
311	11	V6711000030
207	02	V6802000008
204	15	V6802000010
207	24	V6802000010
207	11	V7041400170
208	09	V7041400170
324	02	V7041400170
327	02	V7041400170
105	16	V7041400170
214	03	V7041400170
605	12	V7041400170
612	05	V7041400170
230	06	V7041400250
301	04	V7041400300
208	08	V7041400350
325	07	V7041400400
324	12	V7041400650
327	07	V7041400650
322	06	V7041400700
230	14	V7051400400
230	08	V7051400470
311	09	V7051400470

견출번호	순	부품번호
605	16	V7051400470
205	17	V7051400520
311	15	V7051400520
321	04	V7051400520
311	05	V7051400550
208	11	V7051400620
202	06	V7051400650
415	25	V7081400150
250	08	V7201019009
250	14	V7201024014
408	06	V7201024014
402	19	V7201024014
250	02	V7201024016
408	13	V7201024016
202	16	V7201024018
309	01	V7201024018
331	02	V7201024018
214	12	V7201024018
608	09	V7201024020
408	04	V7201035044
322	04	V7201057070
611	02	V7211031035
201	06	V7211031055
320	02	V7211031075
201	02	V7211031095
320	10	V7211031125
201	11	V7211031140
402	08	V7231020029
402	16	V7231020080
408	14	V7301020016
408	05	V7301050044
603	05	V7441152507
603	06	V7441173006
611	03	V7441173006
230	09	V7441254708
205	18	V7441255210
321	05	V7441255210
208	12	V7441256210
311	20	V7441304708
325	09	V7441406510

견출번호	순	부품번호

견출번호	순	부품번호

메 모

메 모