# Directions for use of Parts Catalogue

## 1. Applicable model of machines

All component and option parts used for NP80D rice transplanters are listed in this parts catalogue.

1) MODEL TYPE

D····· 3-CYLINDER DIESEL ENGINE

L····· ROTOR

F····· FERTILIZER

2) AREA CODE

E16···· KOREA

## 2. Details of the Structure Table of Model

*** Structure Table of Model ***

| MODEL / FIG. | SF310UXWE46 | SFF3HUXWEG4E | | | | | | | | | |
|---|---|---|---|---|---|---|---|---|---|---|---|
| 1 | *** | *** | | | | | | | | | |
| 2 | * | * | | | | | | | | | |
| 3 | | *** | | | | | | | | | |
| 4 | *** | | | | | | | | | | |
| 5 | | *** | | | | | | | | | |
| 6 | *** | | | | | | | | | | |
| 7 | *** | *** | | | | | | | | | |
| 8 | ** | | | | | | | | | | |

① ③ ②

① FIG. : Parts structure of the machine is classified by its functions. FIG. number corresponds to the number written at the top of the parts illustration.

② Model : Shows the name of the model.

③ Structure Table : Shows which functions are originally equipped or can be equipped afterwards for each machines

`*´ Standard Parts

`T´ Optional Parts

`R´ Repair Parts (parts which can only be used for repairs)

3. Explanation for head paragraph

| KEY | PART CODE | DESCRIPTION | SPC | TYPE OF MODEL | | | | | | ITC | COL | GRP | REMARKS |
|---|---|---|---|---|---|---|---|---|---|---|---|---|---|
| | | | | SSM48M | SSM48F | SSM48G | SRM48M | SRM48F | SRM48G | | | | |
| 1 | 8595-211-001-20 | CASE/UPPER | * | 1 -229 | | | | | | | | | |
| 1A | 8657-201-081-00 | CASE/UPPER | * | 1 230- | | | 1 | | | | | | |
| 2 | 8595-211-002-10 | CASE/LOWER | * | 1 | | | 1 | | | | | | |
| 3 | V523-100-801-80 | PIN | * | 2 | | | 2 | | | | | | |
| 4 | V211-260-803-00 | BOLT, SEMS | * | 6 | | | 6 | | | | | | |
| | | | * | 2 -229 | | | | | | | | | |
| | | | * | 2 230- | | | 2 | | | | | | |
| | | | | 2 | | | 2 | | | | | | |
| | | | | 1 | | | 1 | | | | | | |

① KEY shows the location of parts diagramed in the illustration.

② Parts numbers begin with `V´ and `W´ are standard parts of the market.

③ `LH´ and `RH´ on the parts name are described against the moving direction of the machine or are described on the condition how to install parts on the machines.

④ SPC : The following symbol classifies parts to be used for machines.

`*´ means standard parts.

`T´ shows that the parts can be installed as optional parts.

`R´ shows that the parts can be used as applicable parts to replace originally equipped parts.

⑤ Upper column : QTY shows the number of parts to be used for one unit of machine.

`M´ is indicated for parts supplied by a meter long.

`1´ is indicated for parts supplied by liter.

`AR´ is indicated for parts need to be adjusted or regulated.

Lower column : serial number

—229 means serial number up to 229.

230— means serial number 230 and after.

⑥ ITC : Interchangeability

`1´…OLD ← NEW

New parts can be used in place of the old parts.

`2´…OLD → NEW

Old parts can be used in place of the new parts.

`3´…OLD →← NEW

Old parts and new parts can not be replaced each other.

⑦ COL : Color code

Color is signified with color code number for colored parts.

Please see the color list shown in the next page.

⑧ GRP : Parts shown in this column can be replaced by SET parts.

Example : Parts marked Ⓐ can be replaced by parts marked Ⓑ, and Ⓓ for Ⓒ, so the rest follow in the same alphabetical order.

⑨ Remarks

＊Other maker's part code number is shown in this column.

＊When Fig. No. is shown in the Remark column of SET parts or ASSY parts, each of their component parts are listed in said Fig. No.

## 4. Color :

The following colors are used color parts.

| COLOR CODE | COLOR | SPRAY TYPE PARTS CODE | PAINTS 4K DRUM PARTS CODE | PAINTS 16K DRUM PARTS CODE |
|---|---|---|---|---|
| 4 L | NEO BLUE | 1300-985-001-20 | 1300-985-003-00 | 1300-985-004-00 |
| 5 K | FRENCH GRAY | 1300-971-001-20 | 1300-971-003-00 | 1300-971-004-00 |
| 5 N | GRAY NO.1 | 1300-983-001-20 | 1300-983-003-00 | ———— |
| 6 G | SUMMER WHITE | 1300-958-001-20 | 1300-958-003-00 | 1300-958-004-00 |
| 7 F | MIRROR BLACK | 1300-954-001-20 | 1300-954-003-00 | 1300-954-004-00 |

NOTE : Color code is signified only for the parts assigned by the maker as color parts.

5. Serial Numbers :

1) For engines serial number is stamped on CYLINDER BLOCK ASSY
Please see Fig. No. 5-1,1A.

2) For chassies serial number is shown on the LABEL.
Please see

6. Parts Order

1) When you order parts, please make sure of correct numbers.

2) When substitute parts is available, the part number ordered will be automatically turned to a new part number.

3) Please be sure to use "ISEKI GENUINE PARTS".
Any other similar parts other than ISEKI parts when used may cause a trouble that makes us unable to repair or guarantee the warrant.

# *** Structure Table of Model ***

| MODEL / FIG. | NP80DE16 | LLEF61 | LLRE61 | LLRE61 | ZLRE61 | ZLRE61 | | | | | | |
|---|---|---|---|---|---|---|---|---|---|---|---|---|
| 1 | * | * | * | * | * | * | | | | | | |
| 2 | * | * | * | * | * | * | | | | | | |
| 3 | * | * | * | * | * | * | | | | | | |
| 4 | * | * | * | * | * | * | | | | | | |
| 5 | * | * | * | * | * | * | | | | | | |
| 6 | * | * | * | * | * | * | | | | | | |
| 7 | * | * | * | * | * | * | | | | | | |
| 8 | * | * | * | * | * | * | | | | | | |
| 9 | * | * | * | * | * | * | | | | | | |
| 10 | * | * | * | * | * | * | | | | | | |
| 11 | * | * | * | * | * | * | | | | | | |
| 12 | * | * | * | * | * | * | | | | | | |
| 13 | * | * | * | * | * | * | | | | | | |
| 14 | * | * | * | * | * | * | | | | | | |
| 15 | * | * | * | * | * | * | | | | | | |
| 16 | * | * | * | * | * | * | | | | | | |
| 17 | * | * | * | * | * | * | | | | | | |
| 18 | * | * | * | * | * | * | | | | | | |
| 19 | * | * | * | * | * | * | | | | | | |
| 20 | * | * | * | * | * | * | | | | | | |
| 21 | * | * | * | * | * | * | | | | | | |
| 22 | * | * | * | * | * | * | | | | | | |
| 23 | * | * | * | * | * | * | | | | | | |
| 24 | * | * | * | * | * | * | | | | | | |
| 25 | * | * | * | * | * | * | | | | | | |
| 26 | * | * | * | * | * | * | | | | | | |
| 27 | * | * | * | * | * | * | | | | | | |
| 28 | * | * | * | * | * | * | | | | | | |
| 29 | * | * | * | * | * | * | | | | | | |
| 30 | * | * | * | * | * | * | | | | | | |
| 31 | * | * | * | * | * | * | | | | | | |
| 32 | * | * | * | * | * | * | | | | | | |
| 33 | | | | | | * | | | | | | |
| 34 | | | | | * | | | | | | | |
| 35 | | * | | * | | | | | | | | |
| 36 | * | | | * | | | | | | | | |
| 37 | * | * | * | * | | | | | | | | |
| 38 | | | | | * | * | | | | | | |
| 39 | * | * | * | * | * | * | | | | | | |
| 40 | * | * | * | * | * | * | | | | | | |
| 41 | * | * | * | * | * | * | | | | | | |
| 42 | * | * | * | * | | | | | | | | |
| 43 | | | | | * | * | | | | | | |
| 44 | | | | | * | * | | | | | | |
| 45 | * | * | * | * | * | * | | | | | | |

# *** Structure Table of Model ***

| MODEL / FIG. | NP80DE16 | LE61 | LF16 | LE61 | LR16 | ZLRE16 | ZLRF16 | | | | | | | | |
|---|---|---|---|---|---|---|---|---|---|---|---|---|---|---|---|
| 46 | * | * | * | * | * | * | * | | | | | | | | |
| 47 | * | * | * | * | * | * | * | | | | | | | | |
| 48 | * | * | * | * | * | * | * | | | | | | | | |
| 49 | * | * | * | * | * | * | * | | | | | | | | |
| 50 | * | * | * | * | * | * | * | | | | | | | | |
| 51 | * | * | * | * | * | * | * | | | | | | | | |
| 52 | * | * | * | * | * | * | * | | | | | | | | |
| 53 | * | * | * | * | * | * | * | | | | | | | | |
| 54 | * | * | * | * | * | * | * | | | | | | | | |
| 55 | * | * | * | * | | | | | | | | | | | |
| 56 | | | | | | * | * | | | | | | | | |
| 57 | * | * | * | * | * | * | * | | | | | | | | |
| 58 | * | | * | | * | * | | | | | | | | | |
| 59 | | * | | * | | | * | | | | | | | | |
| 60 | * | | * | | * | * | | | | | | | | | |
| 61 | | * | | * | | | * | | | | | | | | |
| 62 | * | | * | | * | * | | | | | | | | | |
| 63 | * | * | * | * | * | * | * | | | | | | | | |
| 64 | | | | * | | * | | | | | | | | | |
| 65 | * | * | | | | | | | | | | | | | |
| 66 | * | * | * | * | * | * | * | | | | | | | | |
| 67 | | | | | * | | | | | | | | | | |
| 68 | | | | | | | * | | | | | | | | |
| 69 | | | | * | * | * | | | | | | | | | |
| 70 | * | * | | | | | | | | | | | | | |
| 71 | | | | | | | * | | | | | | | | |
| 72 | | | | | | * | * | | | | | | | | |
| 73 | * | * | * | * | * | * | * | | | | | | | | |
| 74 | | * | | * | | | * | | | | | | | | |
| 75 | * | | * | | * | * | | | | | | | | | |
| 76 | * | * | * | * | * | * | * | | | | | | | | |
| 77 | * | * | * | * | * | * | * | | | | | | | | |
| 78 | * | * | * | * | * | * | * | | | | | | | | |
| 79 | | | | | | * | * | | | | | | | | |
| 80 | * | * | | | | | | | | | | | | | |
| 81 | | | | * | * | | | | | | | | | | |
| 82 | | * | | * | | | * | | | | | | | | |
| 83 | * | | * | | * | * | | | | | | | | | |
| 84 | * | * | * | * | * | * | * | | | | | | | | |
| 85 | * | * | * | * | * | * | * | | | | | | | | |
| 86 | * | * | * | * | | | | | | | | | | | |
| 87 | | | | | | * | * | | | | | | | | |
| 88 | * | * | * | * | * | * | * | | | | | | | | |
| 89 | | | | | | * | * | | | | | | | | |
| 90 | | | | | | * | * | | | | | | | | |

# *** Structure Table of Model ***

| MODEL / FIG. | NP80DE16 | LLEF61 | LLER61 | LLEF61 | ZZLRE16 | ZZLRF16 | | | | | | | |
|---|---|---|---|---|---|---|---|---|---|---|---|---|---|
| 91 | * | * | * | * | * | * | | | | | | | |
| 92 | | | | | * | * | | | | | | | |
| 93 | * | * | * | * | | | | | | | | | |
| 94 | * | * | * | * | * | * | | | | | | | |
| 95 | * | * | * | * | * | * | | | | | | | |
| 96 | * | * | * | * | * | * | | | | | | | |
| 97 | * | * | * | * | * | * | | | | | | | |
| 98 | * | * | * | * | * | * | | | | | | | |
| 99 | * | * | * | * | * | * | | | | | | | |
| 100 | * | * | * | * | * | * | | | | | | | |
| 101 | * | * | * | * | * | * | | | | | | | |
| 102 | * | * | * | * | * | * | | | | | | | |
| 103 | * | * | * | * | * | * | | | | | | | |
| 104 | * | * | * | * | * | * | | | | | | | |
| 105 | * | * | * | * | * | * | | | | | | | |
| 106 | * | * | * | * | * | * | | | | | | | |
| 107 | * | * | * | * | * | * | | | | | | | |
| 108 | | * | | * | | * | | | | | | | |
| 109 | | * | | * | | * | | | | | | | |
| 110 | | * | | * | | * | | | | | | | |
| 111 | | * | | * | | * | | | | | | | |
| 112 | | * | | * | | * | | | | | | | |
| 113 | | * | | * | | * | | | | | | | |
| 114 | | * | | * | | * | | | | | | | |
| 115 | | * | | * | | * | | | | | | | |
| 116 | * | * | * | * | * | * | | | | | | | |
| 117 | * | * | * | * | * | * | | | | | | | |
| 118 | * | * | * | * | * | * | | | | | | | |
| 119 | * | * | * | * | * | * | | | | | | | |
| 120 | * | * | * | * | * | * | | | | | | | |
| 121 | * | * | * | * | * | * | | | | | | | |
| 122 | * | * | * | * | * | * | | | | | | | |
| 123 | * | * | * | * | * | * | | | | | | | |
| 124 | * | * | * | * | * | * | | | | | | | |
| 125 | * | * | * | * | * | * | | | | | | | |
| 126 | * | * | * | * | * | * | | | | | | | |
| 127 | * | * | * | * | * | * | | | | | | | |
| 128 | * | * | * | * | * | * | | | | | | | |
| 129 | * | * | * | * | * | * | | | | | | | |
| 130 | * | * | * | * | * | * | | | | | | | |
| 131 | * | * | * | * | * | * | | | | | | | |
| 132 | * | * | * | * | * | * | | | | | | | |
| 133 | * | * | * | * | * | * | | | | | | | |
| 134 | * | * | | | | | | | | | | | |
| 135 | | | * | * | * | * | | | | | | | |

# *** Structure Table of Model ***

| MODEL / FIG. | NP80DE16 | LE61 | LF16 | LE61 | LR16 | LR61 | ZLRE16 | ZLRF16 | | | | | | | | | |
|---|---|---|---|---|---|---|---|---|---|---|---|---|---|---|---|---|---|
| 136 | | | | | | | * | * | | | | | | | | | |
| 137 | | * | * | | | | | | | | | | | | | | |
| 138 | | | | | * | * | * | * | | | | | | | | | |
| 139 | | | | | | | * | * | | | | | | | | | |
| 140 | | * | * | * | * | * | * | * | | | | | | | | | |
| 141 | | | * | | | | | | | | | | | | | | |
| 142 | | | | | | * | | * | | | | | | | | | |
| 143 | | | * | | * | | | * | | | | | | | | | |
| 144 | | * | * | * | * | * | * | * | | | | | | | | | |
| 145 | | T | T | T | T | | T | T | | | | | | | | | |
| 146 | | T | T | T | T | | T | T | | | | | | | | | |
| 147 | | R | R | R | R | | R | R | | | | | | | | | |
| 148 | | R | R | R | R | | R | R | | | | | | | | | |
| 149 | | T | T | T | T | | T | T | | | | | | | | | |
| 150 | | T | T | T | T | | T | T | | | | | | | | | |
| 151 | | | T | | | T | | T | | | | | | | | | |
| 152 | | * | * | * | * | | * | * | | | | | | | | | |
| 153 | | * | * | * | * | | * | * | | | | | | | | | |
| 154 | | * | * | * | * | | * | * | | | | | | | | | |
| 155 | | * | * | * | * | | * | * | | | | | | | | | |
| 156 | | * | * | * | * | | * | * | | | | | | | | | |
| 157 | | | * | | * | | | * | | | | | | | | | |
| 158 | | | * | | * | | | * | | | | | | | | | |
| 159 | | | * | | * | | | * | | | | | | | | | |
| 160 | | | * | | * | | | * | | | | | | | | | |

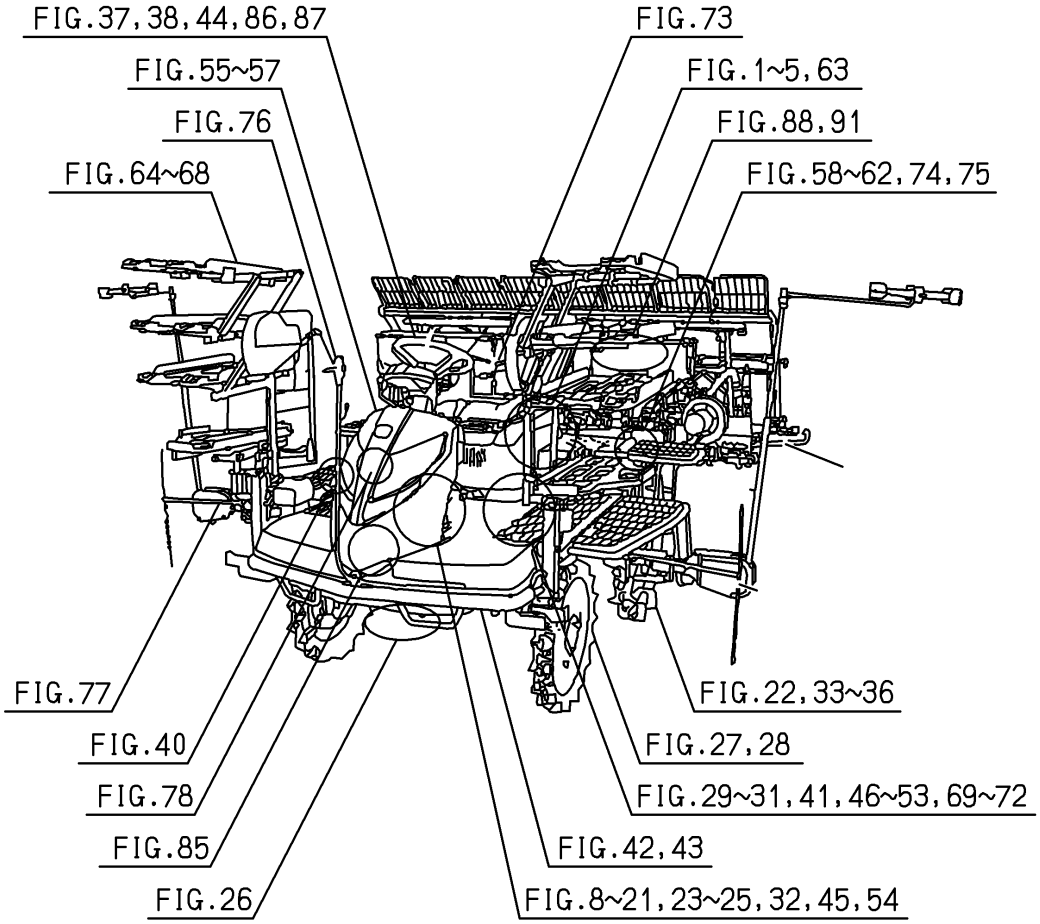
FIG.37,38,44,86,87
FIG.55~57
FIG.76
FIG.64~68
FIG.73
FIG.1~5,63
FIG.88,91
FIG.58~62,74,75
FIG.77
FIG.40
FIG.78
FIG.85
FIG.26
FIG.22,33~36
FIG.27,28
FIG.29~31,41,46~53,69~72
FIG.42,43
FIG.8~21,23~25,32,45,54

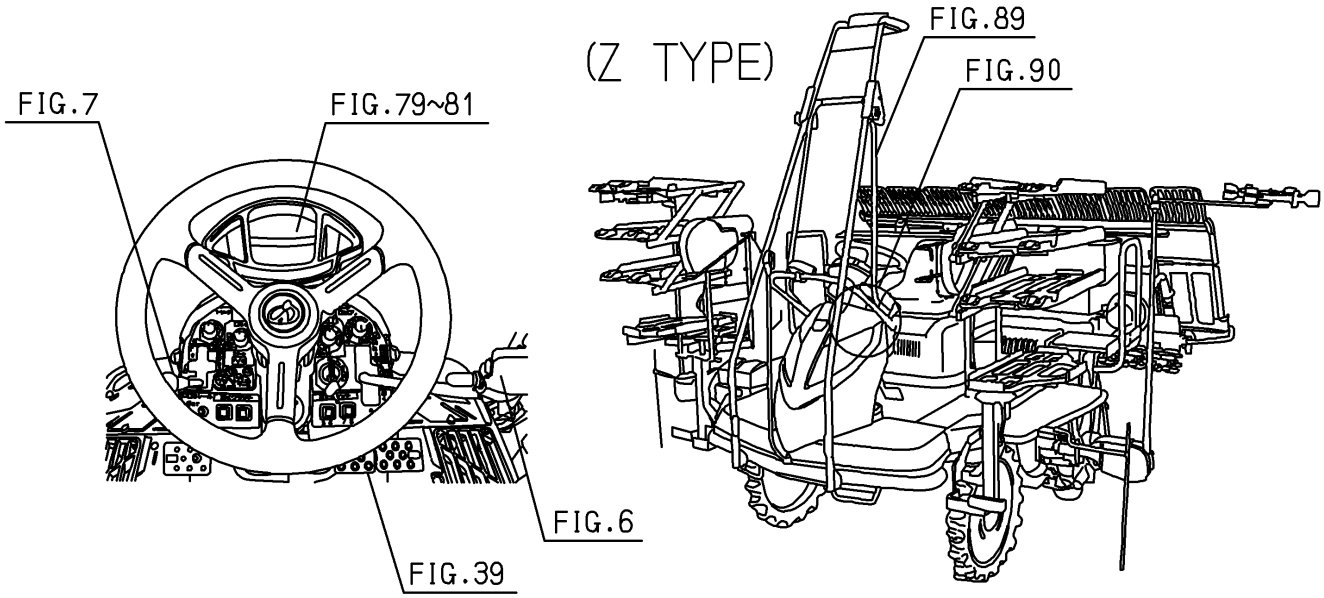
(Z TYPE)
FIG.89
FIG.90
FIG.7
FIG.79~81
FIG.6
FIG.39

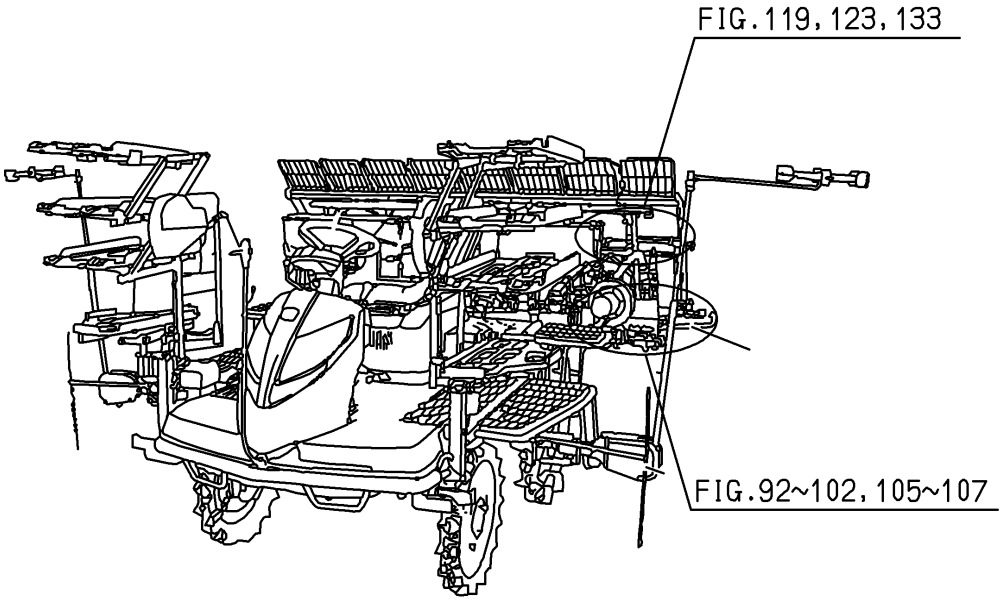
FIG.119,123,133
FIG.92~102,105~107

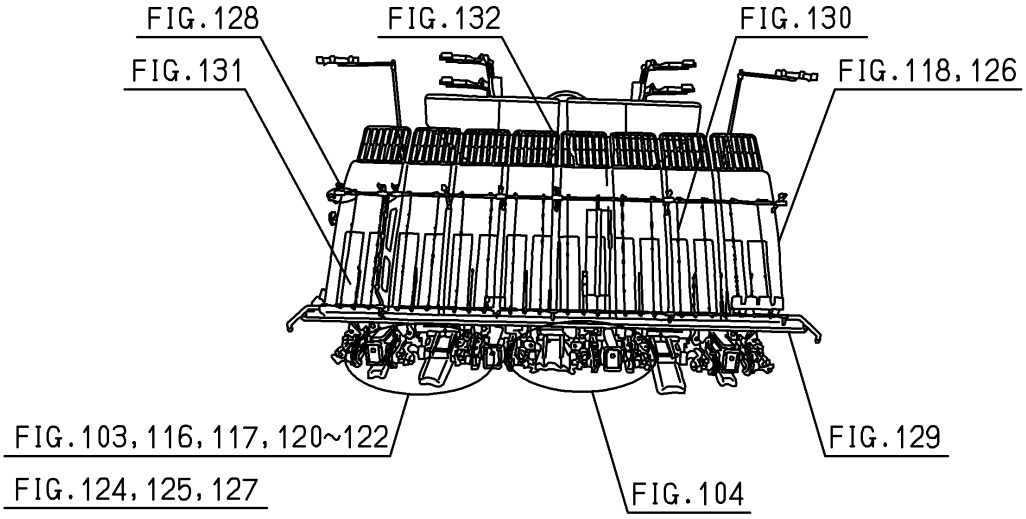
FIG.128
FIG.132
FIG.130
FIG.131
FIG.118,126
FIG.103,116,117,120~122
FIG.124,125,127
FIG.104
FIG.129

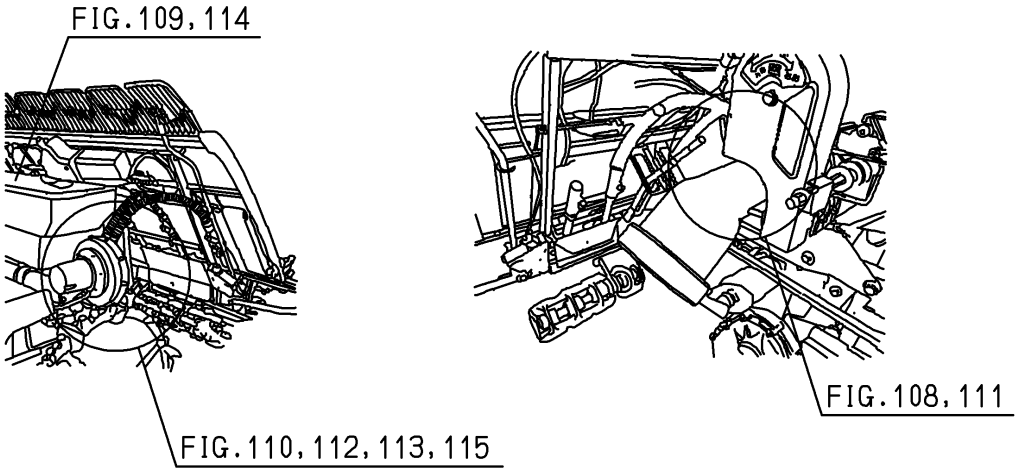
FIG.109,114
FIG.108,111
FIG.110,112,113,115

# Contents

**NP80D E16**

**ENGINE(E3112-UP03)**

CYLINDER HEAD····· Fig. 1
CYLINDER HEAD COVER····· Fig. 2
INLET MANIFOLD····· Fig. 3
EXHAUST MANIFOLD····· Fig. 4
CYLINDER BLOCK····· Fig. 5
BEARING/UNDER SIZE (OPTION)····· Fig. 6
OIL PAN····· Fig. 7
REAR PLATE····· Fig. 8
TIMING GEAR CASE····· Fig. 9
HANGER····· Fig. 10
VALVE····· Fig. 11
CAM SHAFT····· Fig. 12
PISTON····· Fig. 13
PISTON/OVER SIZE (OPTION)····· Fig. 14
CRANK SHAFT····· Fig. 15
OIL PUMP····· Fig. 16
WATER PUMP····· Fig. 17
WATER PUMP····· Fig. 18
COOLING FAN····· Fig. 19
INJECTION NOZZLE····· Fig. 20
INJECTION PUMP····· Fig. 21
FUEL PIPE····· Fig. 22
ADAPTER····· Fig. 23
ELECTRIC (1)····· Fig. 24

ELECTRIC (2)····· Fig. 25
REPAIR PARTS(OPTION)·····Fig. 26
COMPONENT PARTS
FOR 6215-300-036-10 ON Fig.020·····Fig. 27
COMPONENT PARTS
FOR 6215-600-156-20 ON Fig.021·····Fig. 28
COMPONENT PARTS
FOR 6281-100-014-00 ON Fig.024·····Fig. 29

# Contents

## CHASSIS

BRACKET(ENGINE)&MUFFLER SYSTEM ····· Fig. 1
RADIATOR&CLEANER(AIR)SYSTEM ····· Fig. 2
PULLEY(ENGINE)SYSTEM ····· Fig. 3
TENSION(BELT/ENGINE)SYSTEM ····· Fig. 4
TANK(FUEL)SYSTEM ····· Fig. 5
LEVER(MAIN)SYSTEM ····· Fig. 6
LEVER(SUB)SYSTEM ····· Fig. 7
HST SYSTEM ····· Fig. 8
LINK(HST)SYSTEM ····· Fig. 9
PEDAL(ACCELERATOR)SYSTEM ····· Fig. 10
CASE(TRANSMISSION)SYSTEM ····· Fig. 11
SHAFT(INPUT)SYSTEM ····· Fig. 12
SHAFT(COUNTER)SYSTEM ····· Fig. 13
SHAFT(CHANGE)SYSTEM ····· Fig. 14
SHAFT(REAR),CLUTCH&BRAKE SYSTEM ····· Fig. 15
SHAFT(DRIVE/FRONT)SYSTEM ····· Fig. 16
SHAFT(DRIVE/PLANTING)SYSTEM ····· Fig. 17
SHAFT(PLANTING INTERVAL,
PLANTING/OUTPUT)SYSTEM ····· Fig. 18
SHIFT(DRIVE,PLANTING INTERVAL)SYSTEM ····· Fig. 19
LEVER(PLANTING INTERVAL)SYSTEM ····· Fig. 20
PEDAL(CLUTCH/
DIFFERENTIAL GEAR)SYSTEM ····· Fig. 21
WHEEL(REAR)SYSTEM ····· Fig. 22
SHAFT(STEERING)SYSTEM ····· Fig. 23
ROD(TIE)SYSTEM ····· Fig. 24
TURN SYSTEM ····· Fig. 25

CASE(GEAR/FINAL)SYSTEM(1/2)(2/2)····· Fig. 26
WHEEL(FRONT)SYSTEM····· Fig. 27
CAP(WHEEL/FRONT)SYSTEM····· Fig. 28
FRAME(MAIN)SYSTEM····· Fig. 29
SHAFT(DRIVE/REAR)SYSTEM····· Fig. 30
SHAFT(PLANTING)SYSTEM····· Fig. 31
SHAFT(BRAKE)SYSTEM····· Fig. 32
CASE(REAR)SYSTEM(ZRF TYPE)(1/2)(2/2)····· Fig. 33
CASE(REAR)SYSTEM(ZR TYPE EXCEPT F) (1/2)(2/2)····· Fig. 34
CASE(REAR)SYSTEM(F TYPE EXCEPT Z)(1/2)(2/2)····· Fig. 35
CASE(REAR)SYSTEM(EXCEPT Z,F TYPE)(1/2)(2/2)····· Fig. 36
WHEEL(STEERING)SYSTEM
(EXCEPT Z TYPE)····· Fig. 37
WHEEL(STEERING)SYSTEM(Z TYPE)····· Fig. 38
PEDAL(BRAKE/PARKING)SYSTEM····· Fig. 39
PEDAL(BRAKE)SYSTEM····· Fig. 40
WEIGHT(11KG)SYSTEM····· Fig. 41
BUMPER SYSTEM(EXCEPT Z TYPE)····· Fig. 42
BUMPER SYSTEM····· Fig. 43
MOTOR(DRIVE/UNIT)SYSTEM(Z TYPE)····· Fig. 44
PUMP SYSTEM(Z TYPE)····· Fig. 45
CYLINDER SYSTEM····· Fig. 46
PIPING SYSTEM(1/2)(2/2)····· Fig. 47
ARM(CYLINDER)SYSTEM····· Fig. 48
ACCUMULATOR SYSTEM····· Fig. 49
LINK(LOWER)SYSTEM····· Fig. 50
LINK(UPPER)SYSTEM····· Fig. 51
CLUTCH(PLANTING)SYSTEM····· Fig. 52
VALVE SYSTEM····· Fig. 53
CONTROLLER(STEERING)SYSTEM····· Fig. 54
HOOD SYSTEM(EXCEPT Z TYPE)····· Fig. 55
HOOD SYSTEM(Z TYPE)····· Fig. 56
HOOD(REAR)SYSTEM····· Fig. 57

STEP(MAIN)SYSTEM(EXCEPT F TYPE)……Fig. 58
STEP(MAIN)SYSTEM(F TYPE)……Fig. 59
STEP(SIDE)SYSTEM(EXCEPT F TYPE)……Fig. 60
STEP(SIDE)SYSTEM(F TYPE)……Fig. 61
STEP(REAR)SYSTEM(EXCEPT F TYPE)……Fig. 62
COVER(ENGINE)SYSTEM……Fig. 63
TRAY(SEEDLING/SUB)SYSTEM
(R TYPE EXCEPT F)(1/2)(2/2)……Fig. 64
TRAY(SEEDLING/SUB)SYSTEM
(EXCEPT R TYPE)……Fig. 65
MIRROR SYSTEM……Fig. 66
TRAY(SEEDLING/SUB)SYSTEM
(RF TYPE EXCEPT Z)(1/3)-(3/3)……Fig. 67
TRAY(SEEDLING/SUB)SYSTEM(ZRF TYPE)(1/3)-(3/3)……Fig. 68
STAY(FRAME/SEEDLING/SUB)SYSTEM
(R TYPE EXCEPT Z)……Fig. 69
STAY(FRAME/SEEDLING/SUB)SYSTEM
(EXCEPT R TYPE)……Fig. 70
STAY(FRAME/SEEDLING/SUB)SYSTEM
(ZRF TYPE)……Fig. 71
EXTENSION(SEEDLING)SYSTEM(Z TYPE)……Fig. 72
SEAT SYSTEM……Fig. 73
HANDRAIL SYSTEM(F TYPE)……Fig. 74
HANDRAIL SYSTEM(EXCEPT F TYPE)……Fig. 75
MARKER(CENTER)SYSTEM……Fig. 76
MARKER(SIDE)SYSTEM……Fig. 77
LIGHT(HEAD)SYSTEM……Fig. 78
PANEL(INSTRUMENT)SYSTEM(Z TYPE)(1/2)(2/2)……Fig. 79
PANEL(INSTRUMENT)SYSTEM(1/2)(2/2)……Fig. 80
PANEL(INSTRUMENT)SYSTEM
(R TYPE EXCEPT Z)(1/2)(2/2)……Fig. 81
HARNESS(TRAVELING SECTION)SYSTEM
(F TYPE)(1/2)(2/2)……Fig. 82

HARNESS(TRAVELING SECTION)SYSTEM
(EXCEPT F TYPE)(1/2)(2/2)……Fig. 83
HARNESS(PLANTING SECTION)SYSTEM…… Fig. 84
BATTERY SYSTEM……Fig. 85
CONTROLLER(FRONT)SYSTEM
(EXCEPT Z TYPE)…… Fig. 86
CONTROLLER(REAR)SYSTEM(Z TYPE)……Fig. 87
CONTROLLER(REAR)SYSTEM……Fig. 88
STAY(GPS/ANTENNA)SYSTEM(Z TYPE)……Fig. 89
CONTROLLER SYSTEM(Z TYPE)(1/2)(2/2)…… Fig. 90
CLUTCH(PLANTING)SYSTEM……Fig. 91
DRIVE(ROTOR)SYSTEM(Z TYPE)……Fig. 92
DRIVE(ROTOR)SYSTEM(EXCEPT Z TYPE)……Fig. 93
ROTOR SYSTEM…… Fig. 94
LEVER(DEPTH/ROTOR)SYSTEM…… Fig. 95
CASE(CHAIN)SYSTEM(1/2)(2/2)……Fig. 96
LIFT SYSTEM……Fig. 97
RAIL(PLANTING)SYSTEM…… Fig. 98
LINK(FLOAT)SYSTEM…… Fig. 99
SLIDE SYSTEM……Fig.100
CAM(LEAD)SYSTEM…… Fig.101
CAM(FEED/SEEDLING)SYSTEM……Fig.102
LEVER(DEPTH/PLANTING)SYSTEM……Fig.103
FLOAT(CENTER)SYSTEM…… Fig.104
ADJUSTMENT(ROLLING)SYSTEM……Fig.105
AUTOMATIC CONTROL(ROLLING)SYSTEM……Fig.106
RAKE SYSTEM……Fig.107
DRIVE(FERTILIZER)SYSTEM(F TYPE)(1/2)(2/2)…… Fig.108
HARNESS,SENSOR&
SWITCH(FERTILIZER)SYSTEM(F TYPE)…… Fig.109
SENSOR(SEND OUT/FERTILIZER)SYSTEM
(F TYPE)…… Fig.110
AIR CHAMBER(FERTILIZER)SYSTEM(F TYPE)…… Fig.111

FRAME(FERTILIZER)SYSTEM(F TYPE)(1/2)(2/2)……Fig.112
SEND OUT(FERTILIZER)SYSTEM(F TYPE)(1/3)-(3/3)……Fig.113
HOPPER(FERTILIZER)SYSTEM(F TYPE)……Fig.114
PIPING(FERTILIZER)SYSTEM(F TYPE)……Fig.115
FRAME(SIDE)SYSTEM……Fig.116
DRIVE(PLANTING)SYSTEM……Fig.117
PUMP(OILING/SLIDER)SYSTEM……Fig.118
FRAME(TANK/SEEDLING)SYSTEM……Fig.119
LEVER(PICKING/SEEDLING)SYSTEM……Fig.120
FLOAT(SIDE)SYSTEM……Fig.121
MARKER SYSTEM……Fig.122
GUARD(PLATE/FRONT)SYSTEM……Fig.123
PLANTER(LH)SYSTEM……Fig.124
PLANTER(RH)SYSTEM……Fig.125
TANK(SEEDLING)SYSTEM……Fig.126
LAMP(TURN SIGNAL)SYSTEM……Fig.127
REFLECTOR SYSTEM……Fig.128
PLATE(FRONT)SYSTEM……Fig.129
HOLDER(SEEDLING)SYSTEM(1/2)(2/2)……Fig.130
FEED(SEEDLING)SYSTEM(1/2)(2/2)……Fig.131
EXTENSION(TANK/SEEDLING)SYSTEM……Fig.132
SWITCH(STOPPER/TANK/SLIDE)SYSTEM……Fig.133
LABEL(CAUTION)(EXCEPT R TYPE)……Fig.134
LABEL(CAUTION)(R TYPE)……Fig.135
LABEL(CAUTION)(Z TYPE)……Fig.136
ORNAMENT&LABEL(EXCEPT R TYPE)……Fig.137
ORNAMENT&LABEL(R TYPE)……Fig.138
ORNAMENT&LABEL(Z TYPE)……Fig.139
LABEL(PLANT INTERVAL)……Fig.140
LABEL(CAUTION,CONTROL)
(F TYPE EXCEPT R)……Fig.141
LABEL(CAUTION,CONTROL)(RF TYPE)……Fig.142
MANUAL(OPERATION),
BRUSH&HANDLE(SEND OUT)SYSTEM(F TYPE)……Fig.143

ACCESSORY(FORK&GREASE)····· Fig.144

## OPTIONAL.REPAIR PARTS

GREASE(PLANTER)ASSY(OPTION)····· Fig.145
HYDRAULIC LOCK(6/8/5D/7D)SET(OPTION)····· Fig.146
LINK(FLOAT/NP)SET(REPAIR)····· Fig.147
CLUTCH(SAFETY/NP)SET(REPAIR)····· Fig.148
PLATE(BREAKWATER)SET(OPTION)····· Fig.149
HOLDER(SEEDLING)(OPTION)····· Fig.150
COVER(HOPPER/NP80)(F TYPE)(OPTION)····· Fig.151

## COMPONENT PARTS

COMPONENT PARTS
FOR K116-029-000-60 ON Fig.106····· Fig.152
COMPONENT PARTS
FOR K510-022-000-00 ON Fig.8····· Fig.153
COMPONENT PARTS
FOR 2204-738-450-30 ON Fig.124····· Fig.154
COMPONENT PARTS
FOR 2204-739-450-30 ON Fig.125····· Fig.155
COMPONENT PARTS
FOR 2233-207-250-40 ON Fig.15····· Fig.156
COMPONENT PARTS
FOR 2233-688-250-90 ON Fig.114····· Fig.157
COMPONENT PARTS
FOR 2233-688-270-90 ON Fig.114····· Fig.158
COMPONENT PARTS
FOR 2233-688-310-00 ON Fig.114····· Fig.159
COMPONENT PARTS
FOR 2233-688-320-00 ON Fig.114····· Fig.160

# E N G I N E

## E3112UP03···NP80D E16

6004-097-641-10

# FIG. 1 CYLINDER HEAD

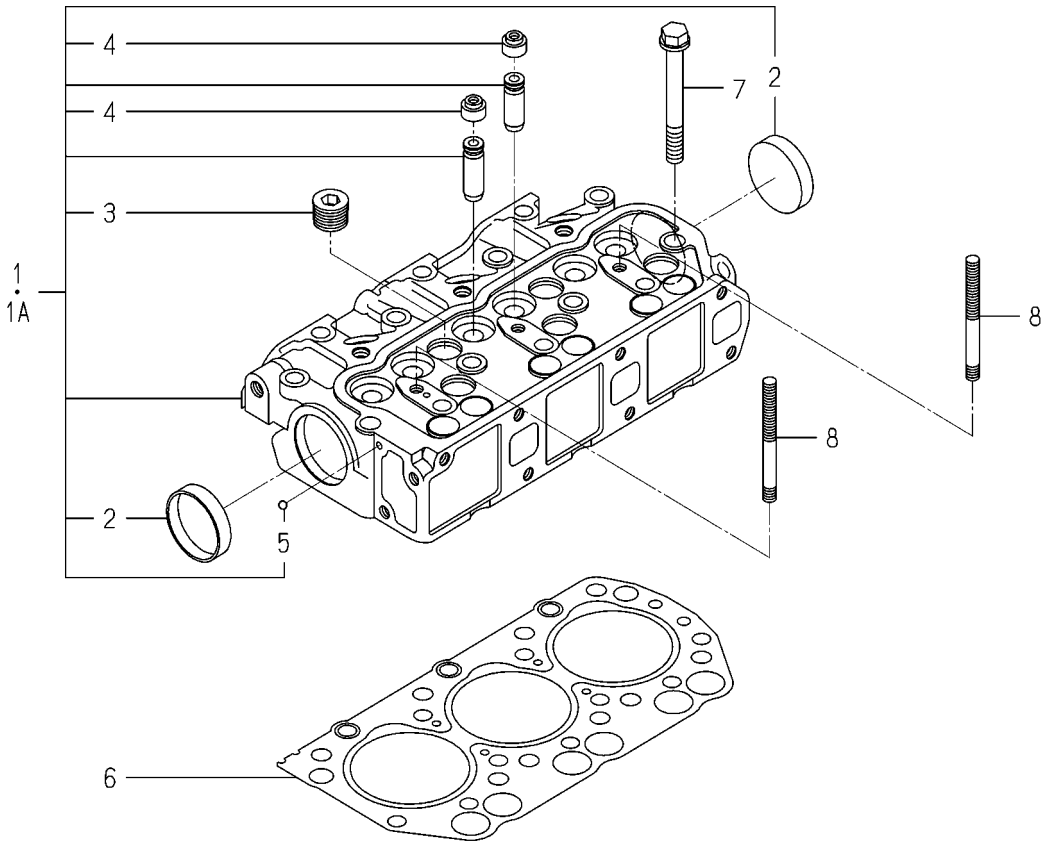


6004-101I-0100,6004-101I-0200

| KEY | PART CODE | DESCRIPTION | SPC | TYPE OF MODEL E3112 UP03 | | ITC | COL | GRP | REMARKS |
|---|---|---|---|---|---|---|---|---|---|
| 1 | 6211-110-057-40 | CYLINDERHEAD ASSY | * | 1 -410032 | | | | | |
| 1A | 6211-110-057-50 | CYLINDERHEAD ASSY | * | 1 410033- | | 1 | | | |
| 2 | 6911-129-006-00 | CAP,SEALING | * | 2 | | | | | |
| 3 | 6209-605-004-10 | PLUG/PT1/2 | * | 5 | | | | | |
| 4 | 6212-569-002-00 | SEAL,OIL | * | 6 | | | | | |
| 5 | V682-200-000-60 | BALL,STEEL | * | 1 | | | | | |
| 6 | 6211-141-029-20 | GASKET/CYLINDERHEAD | * | 1 | | | | | |
| 7 | 6209-000-044-00 | BOLT | * | 14 | | | | | |
| 8 | 6209-300-014-00 | STUD | * | 2 | | | | | |

# FIG. 2 CYLINDER HEAD COVER

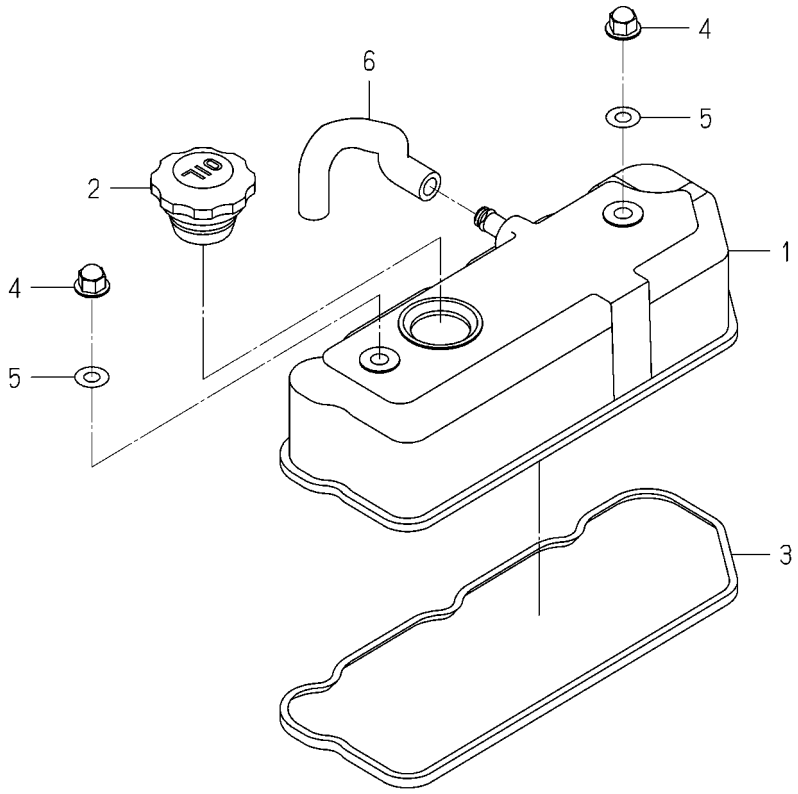


6003-110 -0100

| KEY | PART CODE | DESCRIPTION | SPC | TYPE OF MODEL E3112 UP03 | | ITC | COL | GRP | REMARKS |
|---|---|---|---|---|---|---|---|---|---|
| 1 | 6211-170-004-20 | COVER/CYLINDER HEAD | * | 1 | | | | | |
| 2 | 6211-751-001-10 | CAP,OIL FILLER | * | 1 | | | | | |
| 3 | 6211-173-003-00 | SEAL,CYL.HEAD COVER | * | 1 | | | | | |
| 4 | 6209-490-002-10 | NUT/CAP | * | 2 | | | | | |
| 5 | 6209-572-003-00 | GASKET | * | 2 | | | | | |
| 6 | 6209-360-028-20 | HOSE/RUBBER | * | 1 | | | | | |

# FIG. 3 INLET MANIFOLD

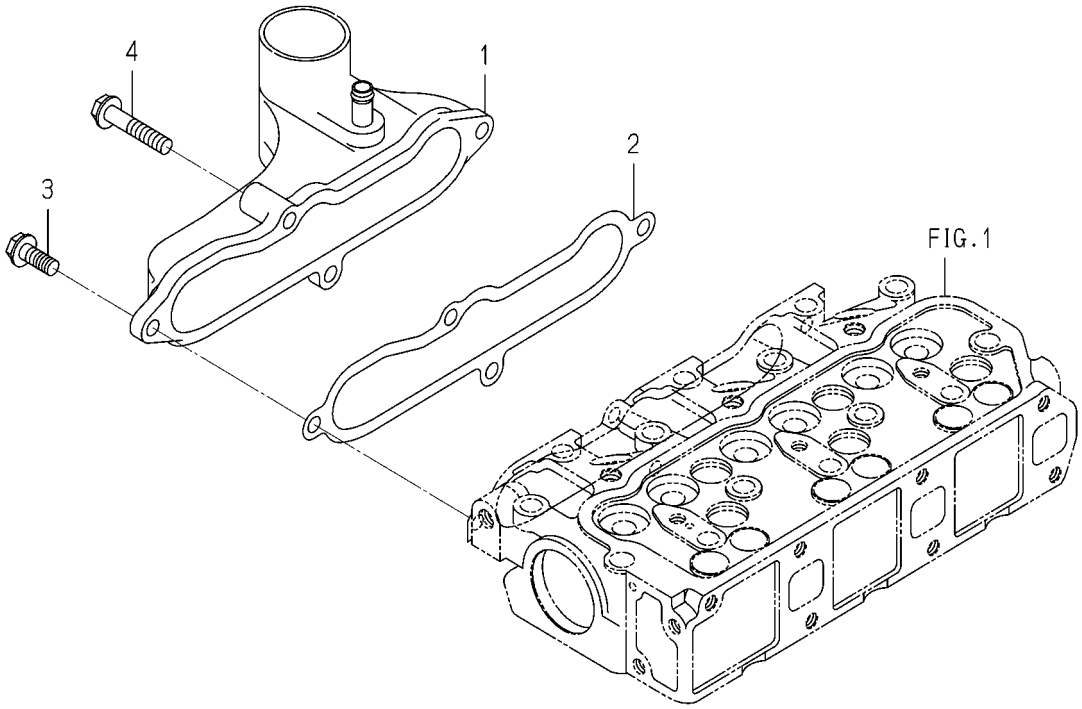


6003-120B-0100

| KEY | PART CODE | DESCRIPTION | SPC | TYPE OF MODEL E3112 UP03 | | ITC | COL | GRP | REMARKS |
|---|---|---|---|---|---|---|---|---|---|
| 1 | 6214-111-011-20 | MANIFOLD(INLET) ASSY | * | 1 | | | | | |
| 2 | 6214-115-001-20 | GASKET,INLET MANIFOL | * | 1 | | | | | |
| 3 | V231-360-802-00 | FLANGEBOLT/M8X20 | * | 3 | | | | | |
| 4 | V231-360-804-00 | FLANGEBOLT/M8X40 | * | 1 | | | | | |

# FIG. 4 EXHAUST MANIFOLD

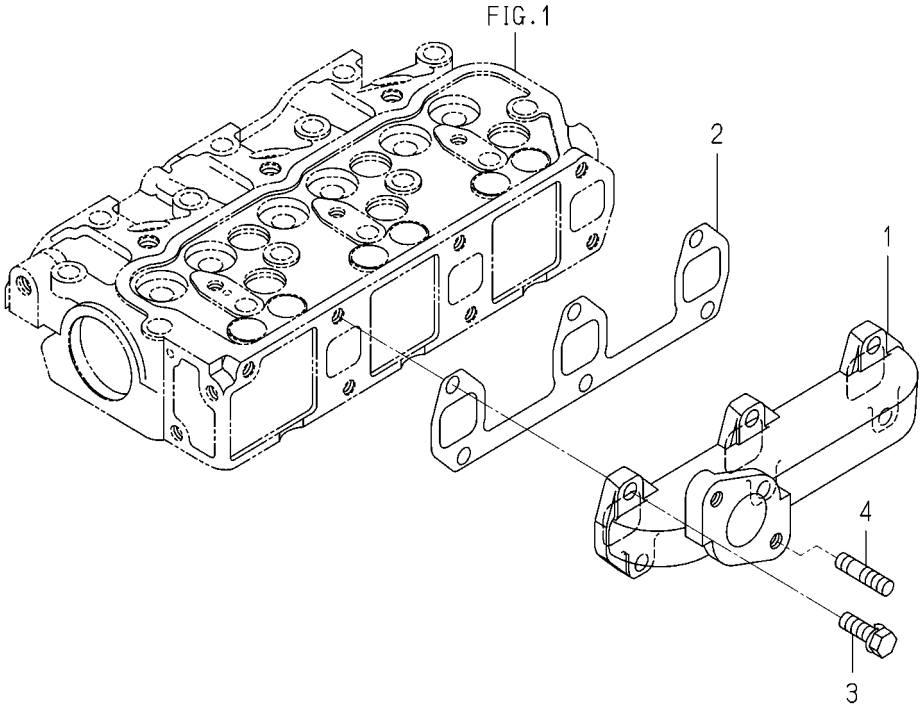


6003-140 -0100

| KEY | PART CODE | DESCRIPTION | SPC | TYPE OF MODEL E3112 UP03 | | ITC | COL | GRP | REMARKS |
|---|---|---|---|---|---|---|---|---|---|
| 1 | 6214-141-008-20 | MANIFOLD/EXHAUST | * | 1 | | | | | |
| 2 | 6214-145-001-30 | GASKET,EXH.MANIFOLD | * | 1 | | | | | |
| 3 | V211-560-802-50 | BOLT,S/M8X25/7T | * | 6 | | | | | |
| 4 | 6904-110-822-00 | STUD | * | 2 | | | | | |

# FIG. 5 CYLINDER BLOCK

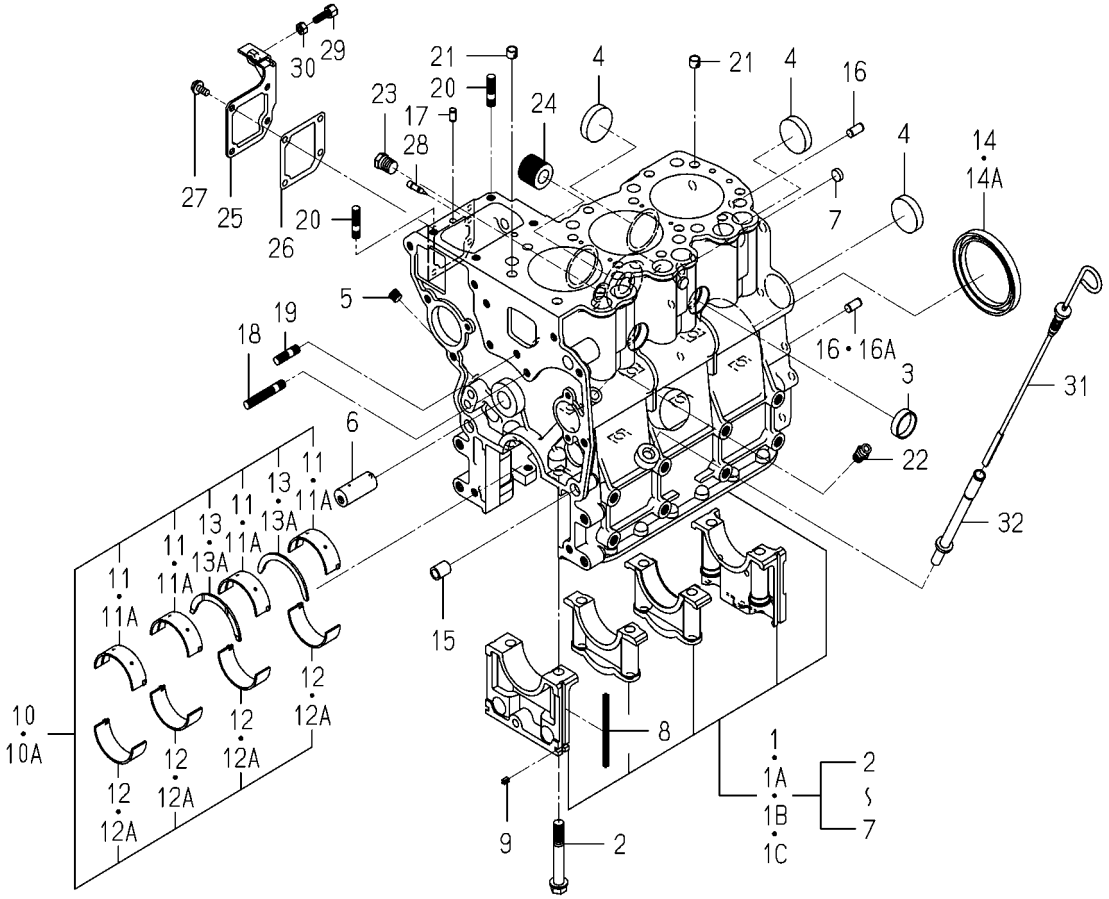


6004-203G-0100

| KEY | PART CODE | DESCRIPTION | SPC | TYPE OF MODEL E3112 UP03 | | ITC | COL | GRP | REMARKS |
|---|---|---|---|---|---|---|---|---|---|
| 1 | 6211-210-037-80 | CYLINDERBLOCK ASSY | * | 1 -413207 | | | | | |
| 1A | 6211-210-037-90 | CYLINDERBLOCK ASSY | * | 1 -416985 | | 1 | | | |
| 1B | 6211-210-113-00 | CYLINDERBLOCK ASSY | * | 1 -447964 | | | | | |
| 1C | 6211-210-113-10 | CYLINDERBLOCK ASSY | * | 1 447965- | | 3 | | | |
| 2 | 6209-000-004-10 | BOLT | * | 8 | | | | | |
| 3 | 6209-610-001-10 | CUP/SEALING/28 | * | 2 | | | | | |
| 4 | 6209-610-009-00 | CUP/SEALING/36 | * | 4 | | | | | |
| 5 | 6209-605-007-10 | PLUG/PT1/8 | * | 3 | | | | | |
| 6 | 6212-531-014-00 | PIN/IDLEGEAR | * | 1 | | | | | |
| 7 | 6209-610-008-00 | CUP/SEALING/12 | * | 2 | | | | | |
| 8 | 6211-258-001-00 | SEAL,BEARING CAP | * | 4 | | | | | |
| 9 | 6211-258-002-00 | SEAL,BEARING CAP/7 | * | 2 | | | | | |
| 10 | 6211-510-001-00 | METAL,CRANK SET | * | 1 -448371 | | | | | |
| 10A | 6211-510-021-00 | BEARING/CRANKSET | * | 1 448372- | | | | | |
| 11 | 6211-511-003-00 | BEARING/CRANK/UPPER | * | 4 -448371 | | | | | |
| 11A | 6211-511-023-00 | BEARING/CRANK/UPPER | * | 4 448372- | | | | | |
| 12 | 6211-511-004-00 | BEARING/CRANK/LOWER | * | 4 -448371 | | | | | |
| 12A | 6211-511-024-00 | BEARING/CRANK/LOWER | * | 4 448372- | | | | | |
| 13 | 6211-599-001-10 | BEARING,THRUST CRANK | * | 2 -448371 | | | | | |
| 13A | 6211-599-012-00 | BEARING/THRUST/CRANK | * | 2 448372- | | | | | |
| 14 | 6209-625-001-00 | SEAL,OIL | * | 1 -435310 | | | | | |
| 14A | 6209-625-012-00 | OILSEAL | * | 1 435311- | | | | | |
| 15 | 6209-749-001-20 | PIN/TUBE | * | 2 | | | | | |
| 16 | 6213-129-006-00 | PIN/STRAIGHT | * | 2 -440259 | | | | | |
| 16A | 6213-129-006-00 | PIN/STRAIGHT | * | 1 440260- | | | | | |
| 17 | 6209-740-005-00 | PIN | * | 2 | | | | | |
| 18 | 6904-110-840-00 | STUD/M8X40 | * | 1 | | | | | |
| 19 | 6904-110-818-00 | STUD | * | 1 | | | | | |
| 20 | 6904-110-822-00 | STUD | * | 2 | | | | | |
| 21 | 6294-453-002-00 | DOWEL | * | 2 | | | | | |

# FIG. 5 CYLINDER BLOCK

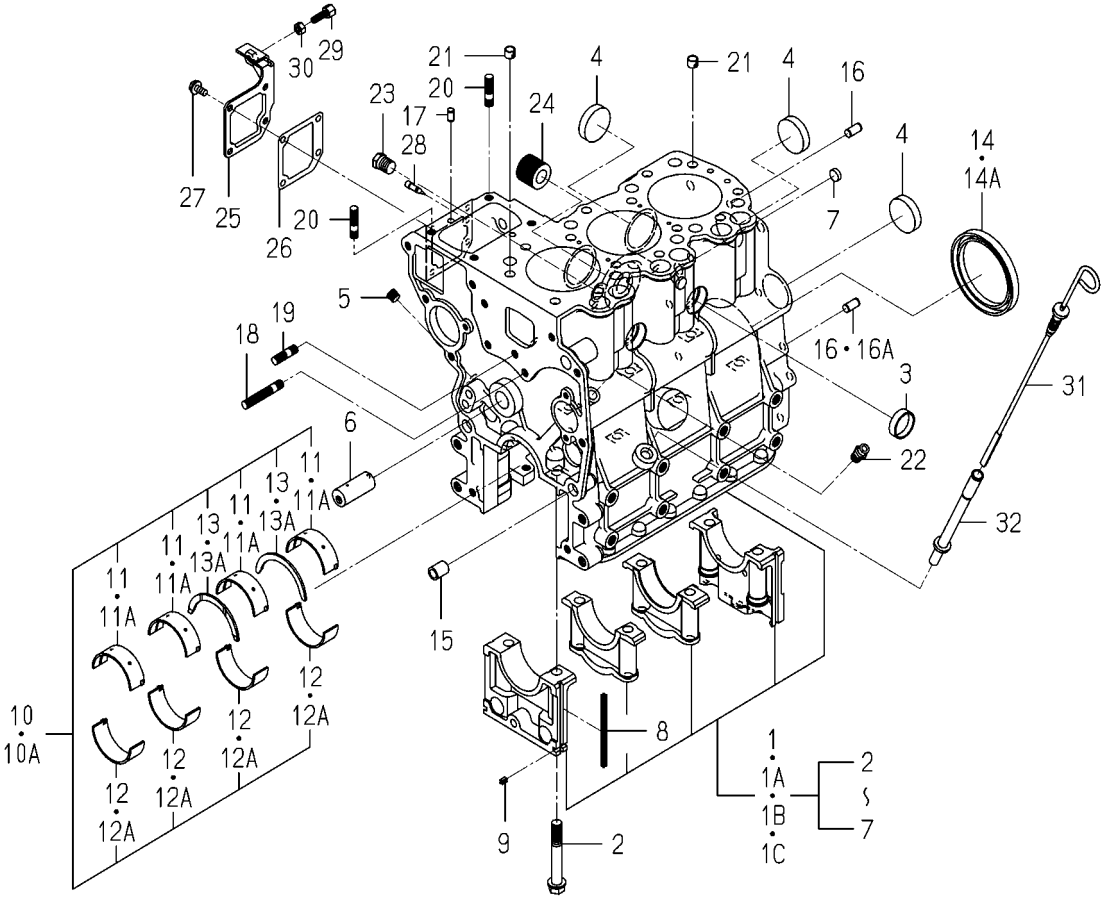


6004-203G-0100

| KEY | PART CODE | DESCRIPTION | SPC | TYPE OF MODEL E3112 UP03 | | ITC | COL | GRP | REMARKS |
|---|---|---|---|---|---|---|---|---|---|
| 22 | 6909-902-299-00 | NIPPLE | * | 1 | | | | | |
| 23 | V782-160-000-4T | PLUG/SCREW/SEAL | * | 1 | | | | | |
| 24 | 6213-319-001-00 | CONNECTOR,OIL FILTER | * | 1 | | | | | |
| 25 | 6211-291-001-10 | COVER,INJ PUMP | * | 1 | | | | | |
| 26 | 6211-292-001-20 | GASKET/COVER | * | 1 | | | | | |
| 27 | V230-360-601-20 | FLANGEBOLT/M6X12 | * | 4 | | | | | |
| 28 | 6215-549-013-00 | PIN | * | 1 | | | | | |
| 29 | 6209-788-001-00 | BOLT,ADJUST | * | 1 | | | | | |
| 30 | V301-260-006-00 | NUT/M6 | * | 1 | | | | | |
| 31 | 6211-760-053-10 | LEVELGAGE | * | 1 | | | | | |
| 32 | 6211-766-009-10 | GUIDE/LEVELGAGE COMP | * | 1 | | | | | |

# FIG. 6 BEARING/UNDER SIZE (OPTION)

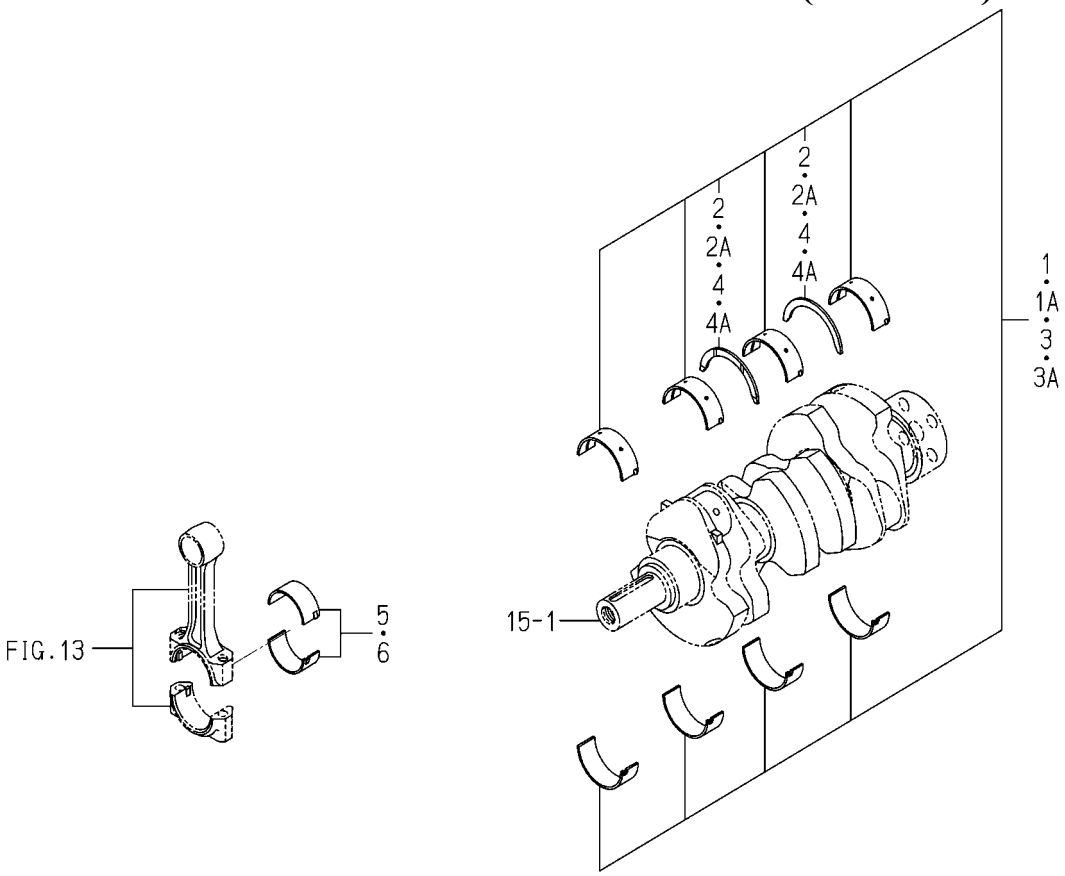


6003-209 -0100

| KEY | PART CODE | DESCRIPTION | SPC | TYPE OF MODEL E3112 UP03 | | ITC | COL | GRP | REMARKS |
|---|---|---|---|---|---|---|---|---|---|
| 1 | 6211-540-001-00 | BRG/CRANK/UN050 SET | T | 1 -448371 | | | | | |
| 1A | 6211-540-018-00 | BRG/CRANK/UN050 SET | T | 1 448372- | | | | | |
| 2 | 6211-599-001-10 | BEARING,THRUST CRANK | T | 2 -448371 | | | | | |
| 2A | 6211-599-012-00 | BEARING/THRUST/CRANK | T | 2 448372- | | | | | |
| 3 | 6211-560-001-00 | BRG/CRANK/UN100 SET | T | 1 -448371 | | | | | |
| 3A | 6211-560-007-00 | BRG/CRANK/UN100 SET | T | 1 448372- | | | | | |
| 4 | 6211-599-001-10 | BEARING,THRUST CRANK | T | 2 -448371 | | | | | |
| 4A | 6211-599-012-00 | BEARING/THRUST/CRANK | T | 2 448372- | | | | | |
| 5 | 6212-274-016-00 | BRG/CONROD/UN050 SET | T | 3 | | | | | |
| 6 | 6212-276-016-00 | BRG/CONROD/UN100 SET | T | 3 | | | | | |

# FIG. 7 OIL PAN

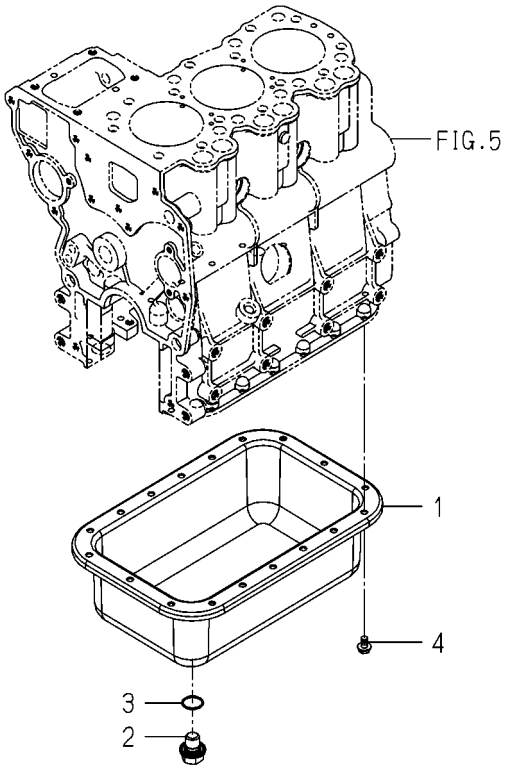


6004-210M-0100

| KEY | PART CODE | DESCRIPTION | SPC | TYPE OF MODEL E3112 UP03 | | ITC | COL | GRP | REMARKS |
|---|---|---|---|---|---|---|---|---|---|
| 1 | 6211-361-104-00 | OILPAN COMP | * | 1 | | | | | |
| 2 | 3805-355-002-20 | PLUG/M14X1.5 | * | 1 | | | | | |
| 3 | V720-102-401-80 | O-RING/1A,P18 | * | 1 | | | | | |
| 4 | V230-360-601-00 | FLANGEBOLT/M6X10 | * | 18 | | | | | |

# FIG. 8 REAR PLATE

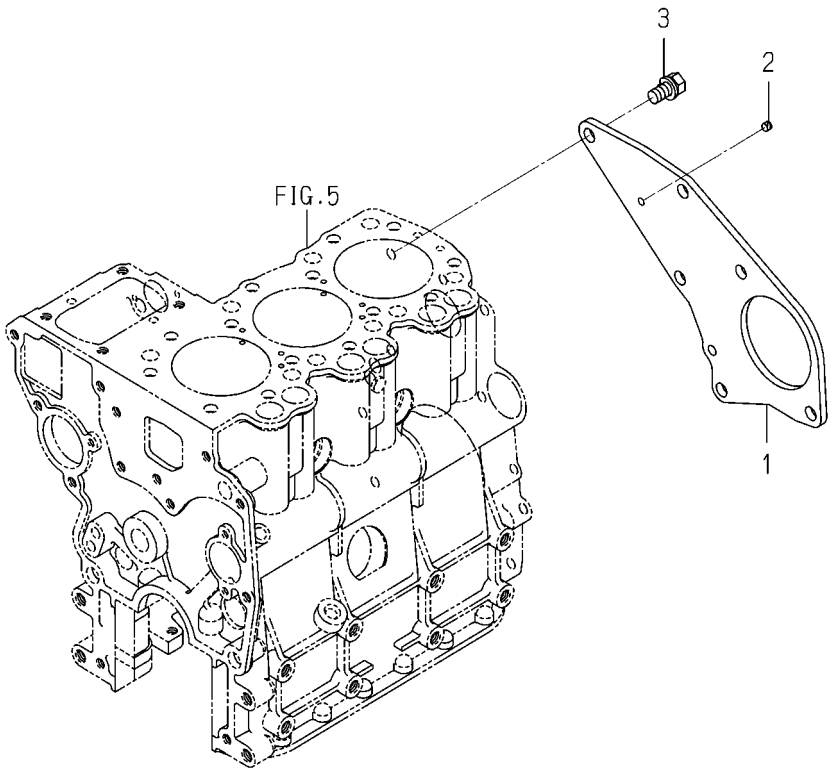


6004-220P-0100

| KEY | PART CODE | DESCRIPTION | SPC | TYPE OF MODEL E3112 UP03 | | ITC | COL | GRP | REMARKS |
|---|---|---|---|---|---|---|---|---|---|
| 1 | 6211-341-081-00 | PLATE/REAR | * | 1 | | | | | |
| 2 | 6211-342-001-30 | POINTER | * | 1 | | | | | |
| 3 | 6901-911-020-00 | BOLT,SEMS/M10X20,7T | * | 4 | | | | | |

# FIG. 9 TIMING GEAR CASE

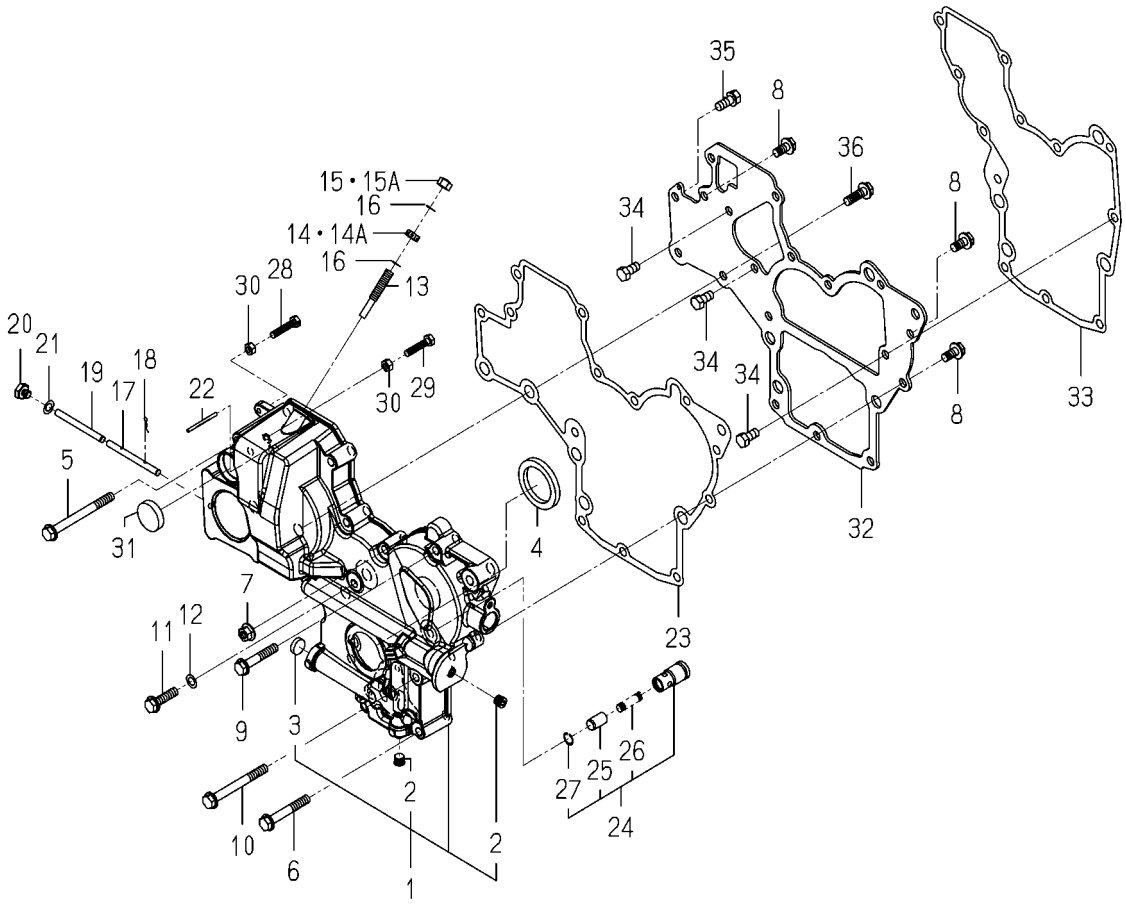


6004-241I-0100,6004-241I-0200

| KEY | PART CODE | DESCRIPTION | SPC | TYPE OF MODEL E3112 UP03 | | ITC | COL | GRP | REMARKS |
|---|---|---|---|---|---|---|---|---|---|
| 1 | 6211-310-069-00 | GEARCASE ASSY | * | 1 | | | | | |
| 2 | 6209-605-007-10 | PLUG/PT1/8 | * | 2 | | | | | |
| 3 | 6209-610-007-00 | CUP/SEALING/16 | * | 1 | | | | | |
| 4 | 6209-625-002-00 | SEAL,OIL | * | 1 | | | | | |
| 5 | V231-360-808-50 | FLANGEBOLT/M8X85 | * | 1 | | | | | |
| 6 | V231-360-805-50 | FLANGEBOLT/M8X55 | * | 2 | | | | | |
| 7 | 3817-401-001-00 | NUT/M08 | * | 1 | | | | | |
| 8 | V231-360-801-60 | FLANGEBOLT/M8X16 | * | 3 | | | | | |
| 9 | V231-360-804-50 | FLANGEBOLT/M8X45 | * | 5 | | | | | |
| 10 | V231-360-807-50 | FLANGEBOLT/M8X75 | * | 1 | | | | | |
| 11 | V231-360-803-00 | FLANGEBOLT/M8X30 | * | 1 | | | | | |
| 12 | 6209-500-003-00 | WASHER/08X14X01 | * | 1 | | | | | |
| 13 | 6215-546-003-30 | STOPPER/FULLLOAD | * | 1 | | | | | |
| 14 | 6209-409-001-00 | NUT/M8 | * | 1 -452993 | | | | | |
| 14A | V305-260-008-00 | NUT/M8 | * | 1 452994- | | | | | |
| 15 | V341-120-008-00 | NUT,CAP/M8 | * | 1 -449049 | | | | | |
| 15A | 6209-490-006-00 | NUT/CAP | * | 1 449050- | | | | | |
| 16 | 6209-920-002-00 | PACKING | * | 2 | | | | | |
| 17 | 6215-542-004-20 | PIN/ARM | * | 1 | | | | | |
| 18 | P117-303-003-00 | PIN/SNAP | * | 2 | | | | | |
| 19 | 6215-542-005-20 | PIN | * | 1 | | | | | |
| 20 | 6209-600-004-00 | PLUG/SCREW | * | 1 | | | | | |
| 21 | 6209-500-003-00 | WASHER/08X14X01 | * | 1 | | | | | |
| 22 | 6209-740-001-00 | PIN,GROOVE | * | 1 | | | | | |
| 23 | 6211-312-003-20 | GASKET/GEARCASE | * | 1 | | | | | |
| 24 | 6213-160-002-20 | VALVE/RELIEF ASSY | * | 1 | | | | | |
| 25 | 6213-161-001-20 | PISTON/VALVE/RELIEF | * | 1 | | | | | |
| 26 | 6213-164-001-00 | SPRING/RELIEF VALVE | * | 1 | | | | | |
| 27 | V705-140-012-00 | RING,SNAP/12 C | * | 1 | | | | | |
| 28 | 6209-050-001-00 | BOLT/M6 | * | 1 | | | | | |

# FIG. 9 TIMING GEAR CASE

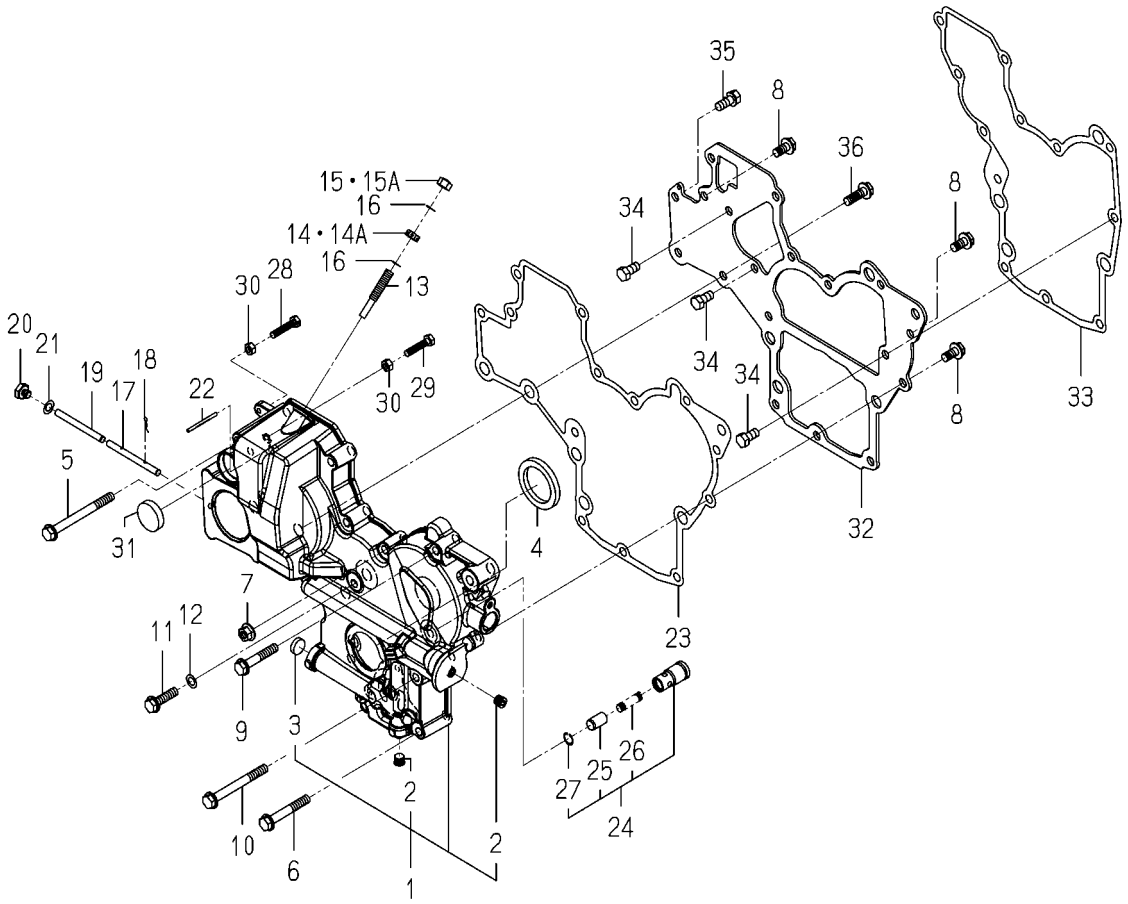


6004-241I-0100,6004-241I-0200

| KEY | PART CODE | DESCRIPTION | SPC | TYPE OF MODEL E3112 UP03 | | ITC | COL | GRP | REMARKS |
|---|---|---|---|---|---|---|---|---|---|
| 29 | 6209-050-002-00 | BOLT/M6 | * | 1 | | | | | |
| 30 | V301-260-006-00 | NUT/M6 | * | 2 | | | | | |
| 31 | 3625-540-004-00 | CAP,BLANK/30 | * | 1 | | | | | |
| 32 | 6211-311-048-10 | PLATE/FRONT | * | 1 | | | | | |
| 33 | 6211-312-004-20 | GASKET/PLATE | * | 1 | | | | | |
| 34 | 6902-050-816-00 | BOLT | * | 3 | | | | | |
| 35 | V211-560-802-00 | BOLT,S/M8X20/7T | * | 1 | | | | | |
| 36 | V231-360-802-50 | FLANGEBOLT/M8X25 | * | 2 | | | | | |

# FIG. 10 HANGER

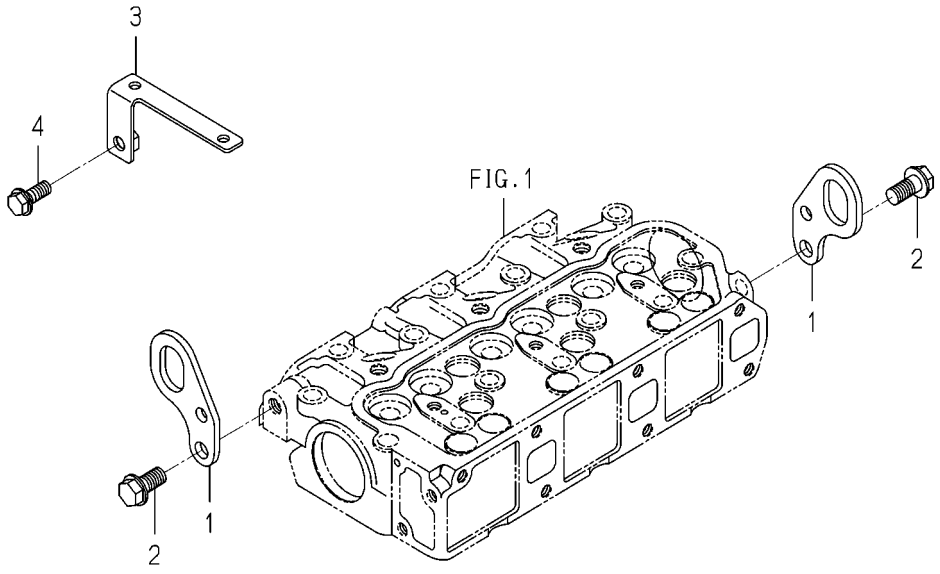


6004-290C-0100

| KEY | PART CODE | DESCRIPTION | SPC | TYPE OF MODEL E3112 UP03 | | ITC | COL | GRP | REMARKS |
|---|---|---|---|---|---|---|---|---|---|
| 1 | 6211-777-007-30 | HANGER | * | 2 | | | | | |
| 2 | V233-361-002-00 | FLANGEBOLT/M10X20 | * | 2 | | | | | |
| 3 | 2213-101-210-00 | GUIDE/HARNESS COMP | * | 1 | | | | | |
| 4 | V231-360-802-00 | FLANGEBOLT/M8X20 | * | 1 | | | | | |

# FIG. 11 VALVE

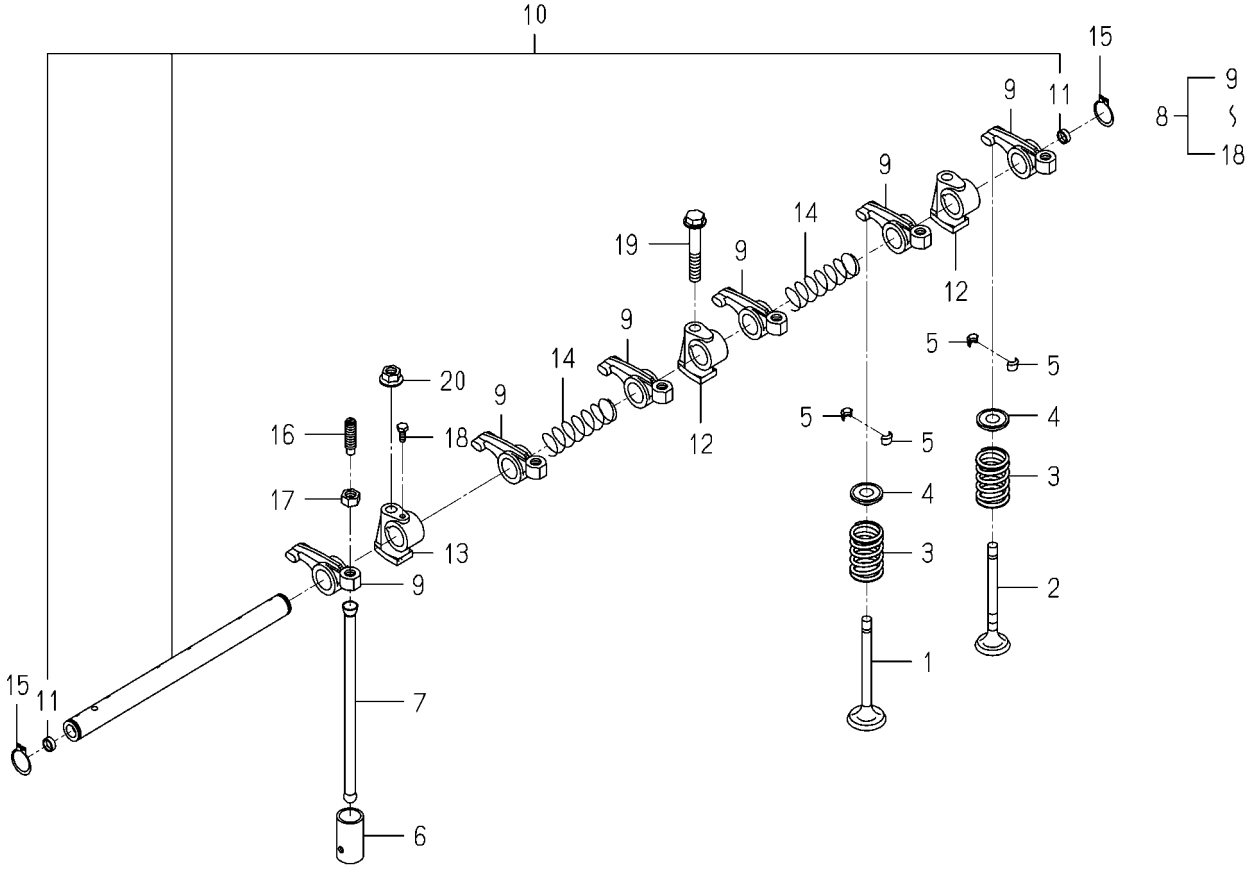


6004-301 -0100

| KEY | PART CODE | DESCRIPTION | SPC | TYPE OF MODEL E3112 UP03 | | ITC | COL | GRP | REMARKS |
|---|---|---|---|---|---|---|---|---|---|
| 1 | 6212-551-028-00 | VALVE/INTAKE | * | 3 | | | | | |
| 2 | 6212-552-014-00 | VALVE/EXHAUST | * | 3 | | | | | |
| 3 | 6212-561-001-10 | SPRING/VALVE | * | 6 | | | | | |
| 4 | 6212-563-005-00 | SEAT/VALVESPRING | * | 6 | | | | | |
| 5 | 6212-565-001-00 | CUTTER,VALVE | * | 12 | | | | | |
| 6 | 6212-571-006-00 | TAPPET | * | 6 | | | | | |
| 7 | 6212-575-002-00 | ROD,PUSH | * | 6 | | | | | |
| 8 | 6212-600-002-30 | ROCKERSHAFT ASSY | * | 1 | | | | | |
| 9 | 6212-611-004-10 | ROCKERARM | * | 6 | | | | | |
| 10 | 6212-620-001-20 | SHAFT/ROCKERARM ASSY | * | 1 | | | | | |
| 11 | 6212-626-002-10 | PLUG | * | 2 | | | | | |
| 12 | 6212-628-004-00 | BRACKET ROCKER SHAFT | * | 2 | | | | | |
| 13 | 6212-628-005-00 | BRACKET,ROCKER SHAFT | * | 1 | | | | | |
| 14 | 6209-940-004-00 | SPRING | * | 2 | | | | | |
| 15 | V704-140-016-00 | RING,SNAP/16 C | * | 2 | | | | | |
| 16 | 6212-616-002-00 | SCREW ADJUST | * | 6 | | | | | |
| 17 | 6209-409-003-00 | NUT | * | 6 | | | | | |
| 18 | 6209-000-002-00 | BOLT | * | 1 | | | | | |
| 19 | V231-360-805-00 | FLANGEBOLT/M8X50 | * | 1 | | | | | |
| 20 | 3817-401-001-00 | NUT/M08 | * | 2 | | | | | |

# FIG. 12 CAM SHAFT

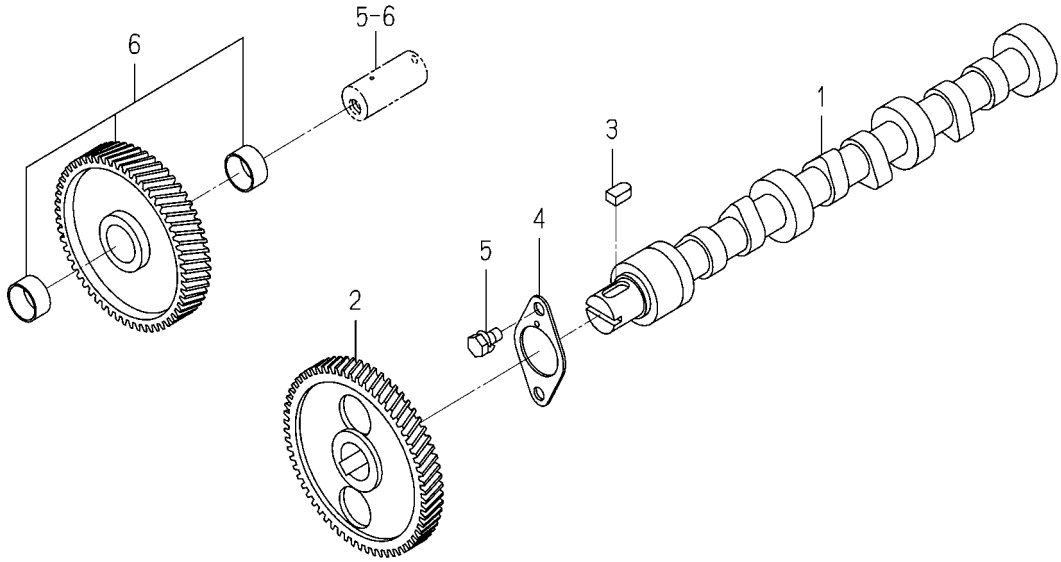


6003-310 -0100

| KEY | PART CODE | DESCRIPTION | SPC | TYPE OF MODEL E3112 UP03 | | ITC | COL | GRP | REMARKS |
|---|---|---|---|---|---|---|---|---|---|
| 1 | 6212-511-002-00 | SHAFT,CAM | * | 1 | | | | | |
| 2 | 6212-522-010-00 | GEAR/CAMSHAFT | * | 1 | | | | | |
| 3 | 6209-730-005-00 | KEY/07X05X09 | * | 1 | | | | | |
| 4 | 6212-535-014-00 | PLATE/THRUST | * | 1 | | | | | |
| 5 | V210-560-601-20 | BOLT,S/M6X12/7T | * | 2 | | | | | |
| 6 | 6212-523-023-00 | GEAR/IDLE ASSY | * | 1 | | | | | |

# FIG. 13 PISTON

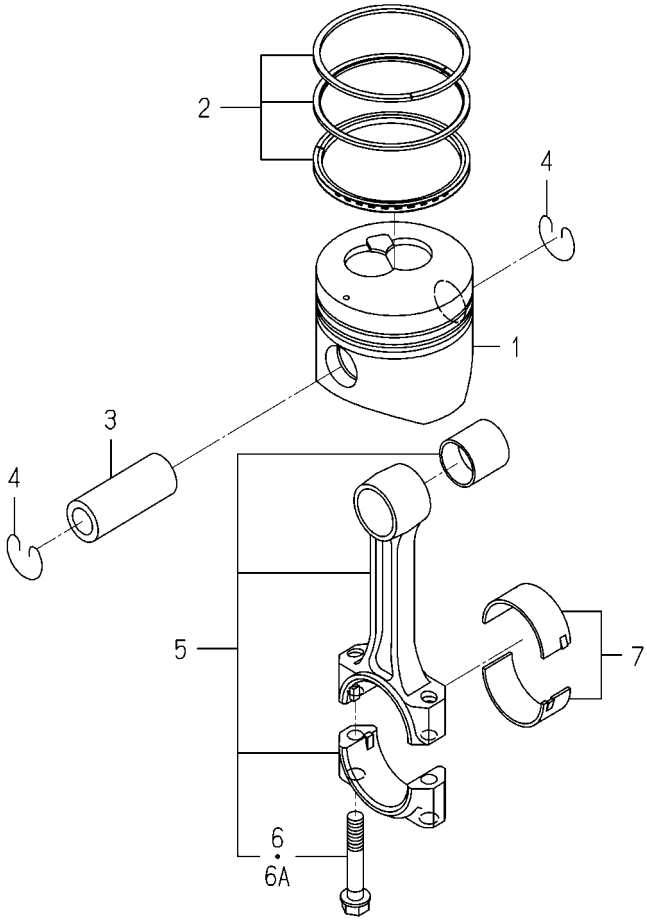


6004-340I-0100

| KEY | PART CODE | DESCRIPTION | SPC | TYPE OF MODEL E3112 UP03 | | ITC | COL | GRP | REMARKS |
|---|---|---|---|---|---|---|---|---|---|
| 1 | 6212-111-094-20 | PISTON | * | 3 | | | | | |
| 2 | 6212-121-014-20 | RING/PISTON SET | * | 3 | | | | | |
| 3 | 6212-211-001-10 | PIN,PISTON | * | 3 | | | | | |
| 4 | 6209-587-001-00 | RING,SNAP | * | 6 | | | | | |
| 5 | 6212-230-004-10 | CONNECTINGROD ASSY | * | 3 | | | | | |
| 6 | 6212-235-005-00 | BOLT/CONNECTINGROD | * | 6 -450320 | | | | | |
| 6A | 6212-235-005-10 | BOLT/CONNECTINGROD | * | 6 450321- | | 1 | | | |
| 7 | 6212-271-016-00 | BEARING/CONNECTING R | * | 3 | | | | | |

# FIG. 14 PISTON/OVER SIZE (OPTION)

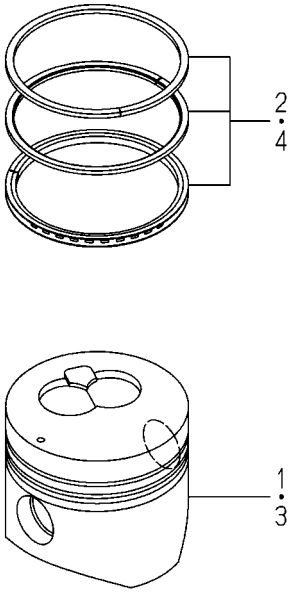


6004-349I-0100

| KEY | PART CODE | DESCRIPTION | SPC | TYPE OF MODEL E3112 UP03 | | ITC | COL | GRP | REMARKS |
|---|---|---|---|---|---|---|---|---|---|
| 1 | 6212-114-094-20 | PISTON(OV/050) | T | 3 | | | | | |
| 2 | 6212-124-014-10 | RINGPISTON/OV050 SET | T | 3 | | | | | |
| 3 | 6212-116-094-20 | PISTON(OV/100) | T | 3 | | | | | |
| 4 | 6212-126-014-10 | RINGPISTON/OV100 SET | T | 3 | | | | | |

# FIG. 15 CRANK SHAFT

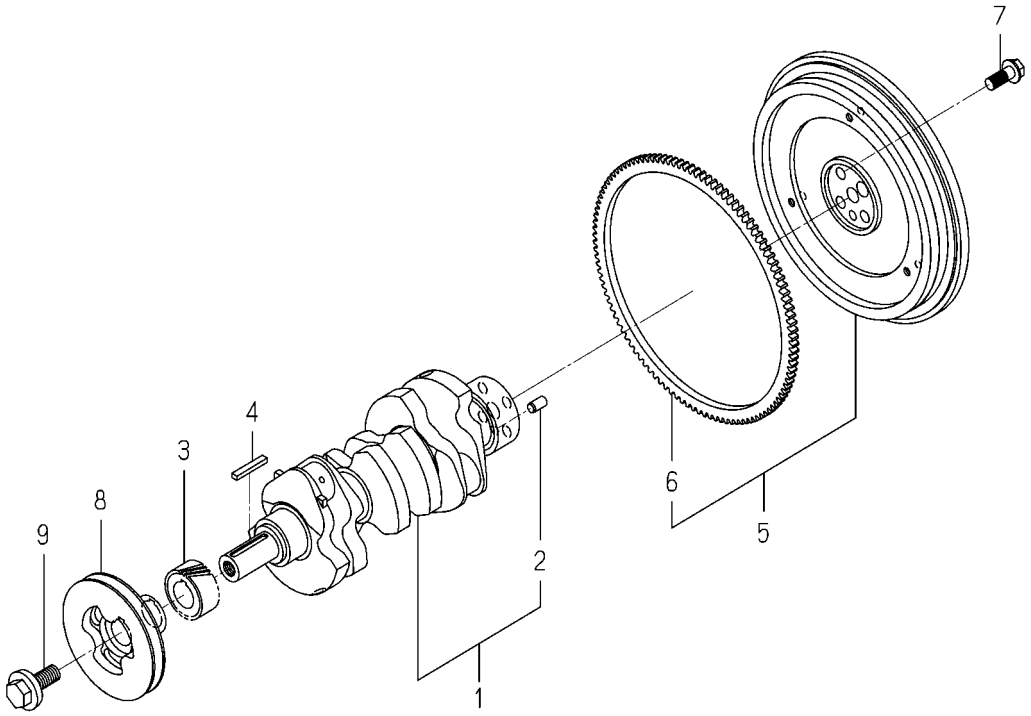


6004-351H-0100

| KEY | PART CODE | DESCRIPTION | SPC | TYPE OF MODEL E3112 UP03 | | ITC | COL | GRP | REMARKS |
|---|---|---|---|---|---|---|---|---|---|
| 1 | 6212-310-009-50 | CRANKSHAFT ASSY | * | 1 | | | | | |
| 2 | V523-101-001-80 | PIN,ST,B/10X18 | * | 1 | | | | | |
| 3 | 6212-521-008-00 | GEAR/CRANK | * | 1 | | | | | |
| 4 | 6209-730-006-00 | KEY/07X05X43 | * | 1 | | | | | |
| 5 | 6212-330-095-20 | FLYWHEEL ASSY | * | 1 | | | | | |
| 6 | 6212-333-009-00 | RINGGEAR | * | 1 | | | | | |
| 7 | 6209-046-015-00 | BOLT/FLANGE | * | 4 | | | | | |
| 8 | 6212-371-074-10 | PULLEY/CRANK | * | 1 | | | | | |
| 9 | 6209-000-043-00 | BOLT/CRANK | * | 1 | | | | | |

# FIG. 16 OIL PUMP

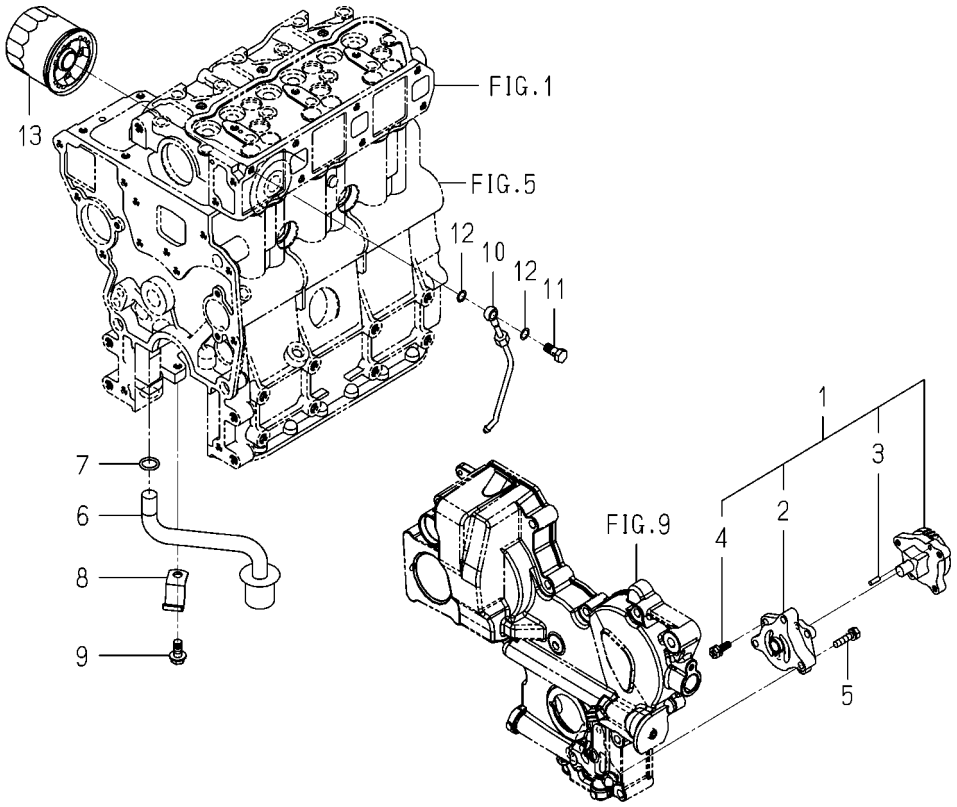


6004-401A-0100

| KEY | PART CODE | DESCRIPTION | SPC | TYPE OF MODEL E3112 UP03 | | ITC | COL | GRP | REMARKS |
|---|---|---|---|---|---|---|---|---|---|
| 1 | 6213-100-003-30 | OILPUMP ASSY | * | 1 | | | | | |
| 2 | 6213-111-001-30 | BODY/OILPUMP | * | 1 | | | | | |
| 3 | 6213-129-003-00 | PIN/STRAIGHT | * | 2 | | | | | |
| 4 | 6213-119-001-00 | BOLT/WS | * | 3 | | | | | |
| 5 | V210-560-602-50 | BOLT,S/M6X25/7T | * | 3 | | | | | |
| 6 | 6213-140-032-10 | STRAINER | * | 1 | | | | | |
| 7 | V720-102-401-50 | O-RING/1A,P15 | * | 1 | | | | | |
| 8 | 6213-149-001-00 | CLAMP,STRAINER | * | 1 | | | | | |
| 9 | V231-360-801-60 | FLANGEBOLT/M8X16 | * | 1 | | | | | |
| 10 | 6213-311-006-00 | PIPE,OIL | * | 1 | | | | | |
| 11 | 6909-906-105-10 | BOLT,JOINT | * | 1 | | | | | |
| 12 | 6209-920-002-00 | PACKING | * | 2 | | | | | |
| 13 | 6213-240-002-20 | CARTRIDGE/OILFILTER | * | 1 | | | | | |

# FIG. 17 WATER PUMP

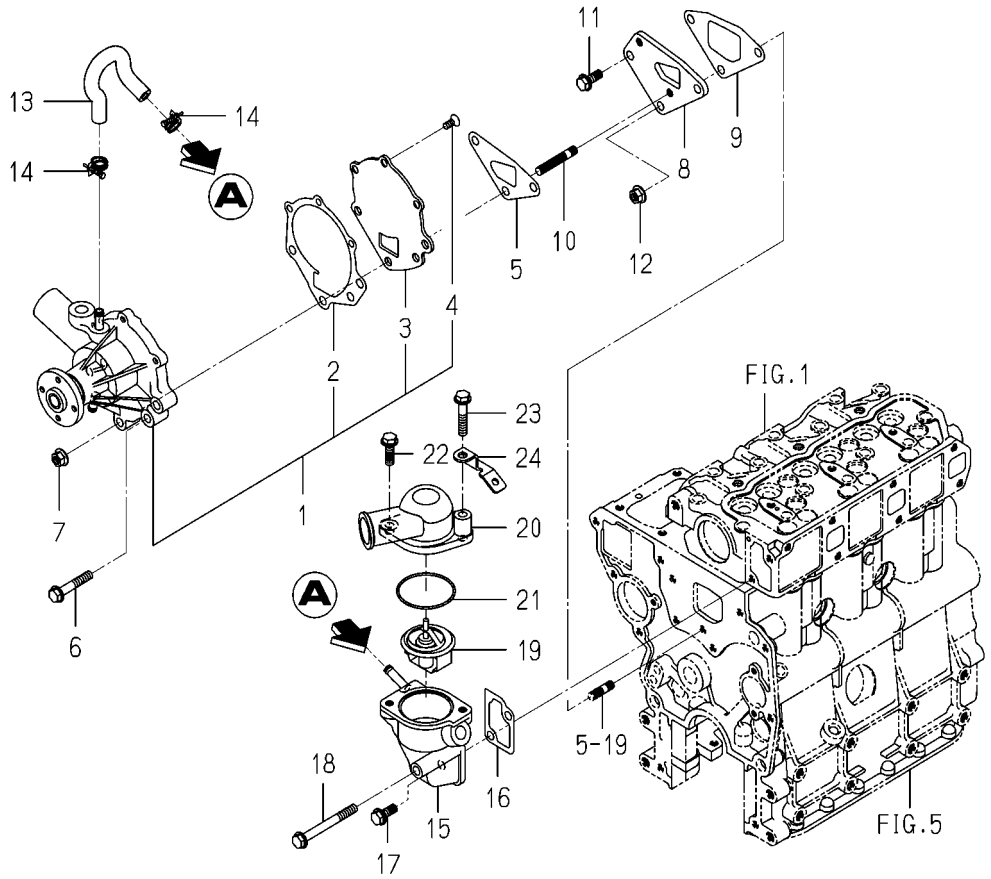


6004-420F-0100

| KEY | PART CODE | DESCRIPTION | SPC | TYPE OF MODEL E3112 UP03 | | ITC | COL | GRP | REMARKS |
|---|---|---|---|---|---|---|---|---|---|
| 1 | 6213-610-005-50 | WATERPUMP ASSY | * | 1 431133- | | | | | |
| 2 | 6213-613-002-10 | GASKET | * | 1 431133- | | | | | |
| 3 | 6213-612-004-00 | PLATE/WATER PUMP | * | 1 431133- | | | | | |
| 4 | 6213-619-003-00 | SCREW/WATER PUMP | * | 3 431133- | | | | | |
| 5 | 6213-614-018-00 | GASKET/WATERPUMP | * | 1 431133- | | | | | |
| 6 | V231-360-804-50 | FLANGEBOLT/M8X45 | * | 1 431133- | | | | | |
| 7 | 3817-401-001-00 | NUT/M08 | * | 2 431133- | | | | | |
| 8 | 6213-619-001-00 | SPACER,PUMP.WATER | * | 1 431133- | | | | | |
| 9 | 6213-614-019-00 | GASKET/SPACER | * | 1 431133- | | | | | |
| 10 | 6904-110-840-00 | STUD/M8X40 | * | 2 431133- | | | | | |
| 11 | V231-360-802-00 | FLANGEBOLT/M8X20 | * | 1 431133- | | | | | |
| 12 | 3817-401-001-00 | NUT/M08 | * | 1 431133- | | | | | |
| 13 | 6213-729-013-10 | HOSE/RUBBER | * | 1 431133- | | | | | |
| 14 | J061-210-015-00 | CLAMP/WIRE/10-15 | * | 2 431133- | | | | | |
| 15 | 6213-716-001-60 | HOUSING/THERMOSTAT | * | 1 431133- | | | | | |
| 16 | 6213-743-002-10 | GASKET/HOUSING | * | 1 431133- | | | | | |
| 17 | V231-360-802-00 | FLANGEBOLT/M8X20 | * | 1 431133- | | | | | |
| 18 | V231-360-807-50 | FLANGEBOLT/M8X75 | * | 1 431133- | | | | | |
| 19 | 6513-770-022-10 | THERMOSTAT | * | 1 431133- | | | | | |
| 20 | 6213-711-018-00 | PIPE/WATEROUTLET | * | 1 431133- | | | | | |
| 21 | V723-102-005-50 | O-RING/1A,S55 | * | 1 431133- | | | | | |
| 22 | V231-360-802-50 | FLANGEBOLT/M8X25 | * | 1 431133- | | | | | |
| 23 | V231-360-804-00 | FLANGEBOLT/M8X40 | * | 1 431133- | | | | | |
| 24 | 2213-101-018-00 | GUIDE/HARNESS/A | * | 1 431133- | | | | | |

# FIG. 18 WATER PUMP

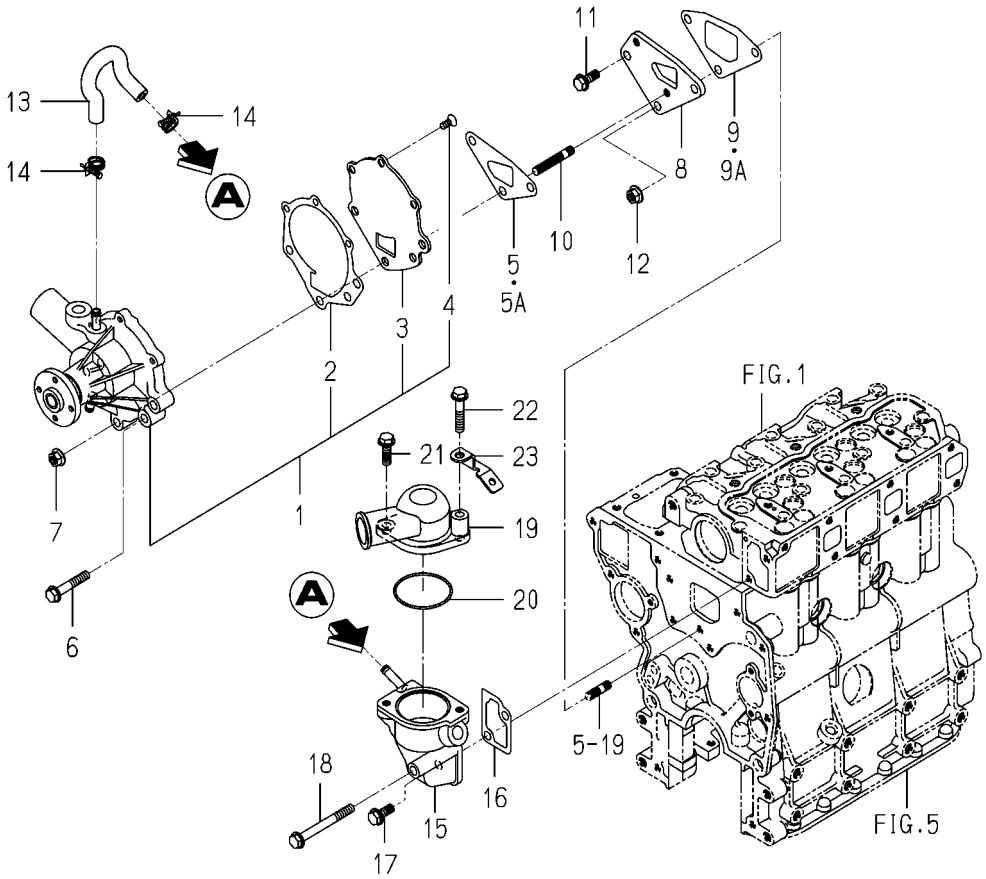


6004-420I-0100

| KEY | PART CODE | DESCRIPTION | SPC | TYPE OF MODEL E3112 UP03 | | ITC | COL | GRP | REMARKS |
|---|---|---|---|---|---|---|---|---|---|
| 1 | 6213-610-005-50 | WATERPUMP ASSY | * | 1 -431132 | | | | | |
| 2 | 6213-613-002-10 | GASKET | * | 1 -431132 | | | | | |
| 3 | 6213-612-004-00 | PLATE/WATER PUMP | * | 1 -431132 | | | | | |
| 4 | 6213-619-003-00 | SCREW/WATER PUMP | * | 3 -431132 | | | | | |
| 5 | 6213-614-003-10 | GASKET/WATER PUMP | * | 1 -429585 | | | | | |
| 5A | 6213-614-018-00 | GASKET/WATERPUMP | * | 1 -431132 | | | | | |
| 6 | V231-360-804-50 | FLANGEBOLT/M8X45 | * | 1 -431132 | | | | | |
| 7 | 3817-401-001-00 | NUT/M08 | * | 2 -431132 | | | | | |
| 8 | 6213-619-001-00 | SPACER,PUMP.WATER | * | 1 -431132 | | | | | |
| 9 | 6213-614-004-10 | GASKET,SPACER | * | 1 -429585 | | | | | |
| 9A | 6213-614-019-00 | GASKET/SPACER | * | 1 -431132 | | | | | |
| 10 | 6904-110-840-00 | STUD/M8X40 | * | 2 -431132 | | | | | |
| 11 | V231-360-802-00 | FLANGEBOLT/M8X20 | * | 1 -431132 | | | | | |
| 12 | 3817-401-001-00 | NUT/M08 | * | 1 -431132 | | | | | |
| 13 | 6213-729-013-10 | HOSE/RUBBER | * | 1 -431132 | | | | | |
| 14 | J061-210-015-00 | CLAMP/WIRE/10-15 | * | 2 -431132 | | | | | |
| 15 | 6213-716-001-60 | HOUSING/THERMOSTAT | * | 1 -431132 | | | | | |
| 16 | 6213-743-002-10 | GASKET/HOUSING | * | 1 -431132 | | | | | |
| 17 | V231-360-802-00 | FLANGEBOLT/M8X20 | * | 1 -431132 | | | | | |
| 18 | V231-360-807-50 | FLANGEBOLT/M8X75 | * | 1 -431132 | | | | | |
| 19 | 6213-711-018-00 | PIPE/WATEROUTLET | * | 1 -431132 | | | | | |
| 20 | V723-102-005-50 | O-RING/1A,S55 | * | 1 -431132 | | | | | |
| 21 | V231-360-802-50 | FLANGEBOLT/M8X25 | * | 1 -431132 | | | | | |
| 22 | V231-360-804-00 | FLANGEBOLT/M8X40 | * | 1 -431132 | | | | | |
| 23 | 2213-101-018-00 | GUIDE/HARNESS/A | * | 1 -431132 | | | | | |

# FIG. 19 COOLING FAN

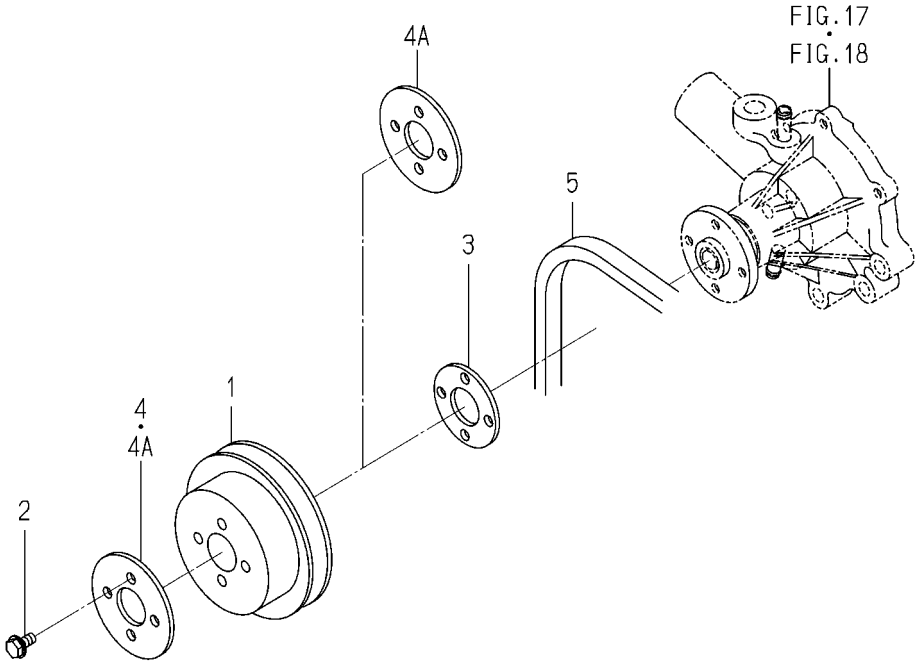


6004-480Y-0100

| KEY | PART CODE | DESCRIPTION | SPC | TYPE OF MODEL E3112 UP03 | | ITC | COL | GRP | REMARKS |
|---|---|---|---|---|---|---|---|---|---|
| 1 | 6213-641-022-20 | PULLEY/WATERPUMP | * | 1 | | | | | |
| 2 | V230-360-601-60 | FLANGEBOLT/M6X16 | * | 4 | | | | | |
| 3 | 6213-669-021-00 | SPACER/FAN | * | 1 -421706 | | | | | |
| 4 | 6213-669-022-00 | SPACER/FAN | * | 1 -421706 | | | | | |
| 4A | 6213-669-022-00 | SPACER/FAN | * | 2 421707- | | | | | |
| 5 | 6213-671-053-00 | BELT/VNR5A36.0 | * | 1 | | | | | |

# FIG. 20 INJECTION NOZZLE

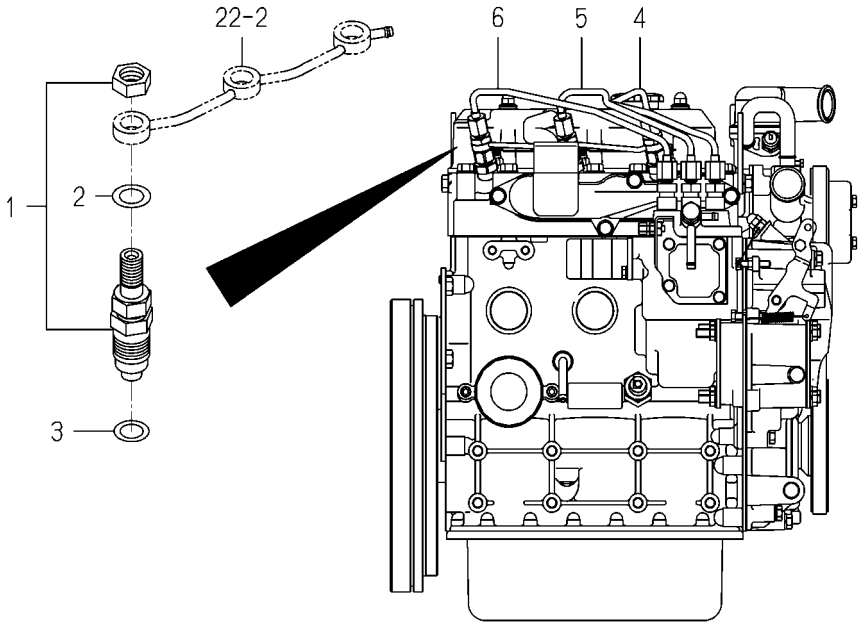


6004-501C-0100

| KEY | PART CODE | DESCRIPTION | SPC | TYPE OF MODEL E3112 UP03 | | ITC | COL | GRP | REMARKS |
|---|---|---|---|---|---|---|---|---|---|
| 1 | 6215-300-036-10 | INJECTIONNOZZLE ASSY | * | 3 | | | | | FIG 027 |
| 2 | 6215-359-001-00 | WASHER | * | 3 | | | | | |
| 3 | 6215-315-002-00 | GASKET,NOZZLE | * | 3 | | | | | |
| 4 | 6215-411-126-10 | PIPE/INJECTION ASSY | * | 1 | | | | | |
| 5 | 6215-411-127-00 | PIPE/INJECTION ASSY | * | 1 | | | | | |
| 6 | 6215-411-128-00 | PIPE/INJECTION ASSY | * | 1 | | | | | |

# FIG. 21 INJECTION PUMP

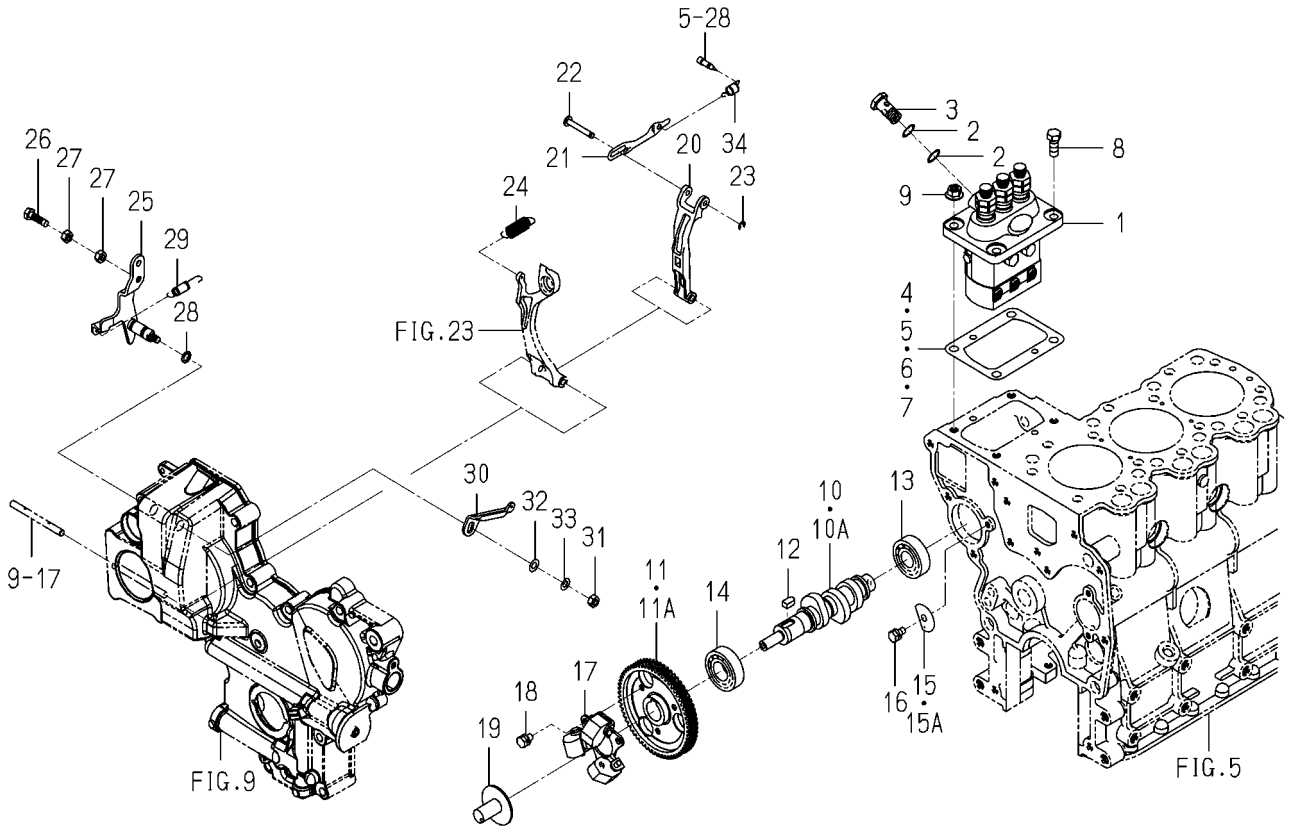


6004-511Q-0100

| KEY | PART CODE | DESCRIPTION | SPC | TYPE OF MODEL E3112 UP03 | | ITC | COL | GRP | REMARKS |
|---|---|---|---|---|---|---|---|---|---|
| 1 | 6215-600-156-20 | INJECTIONPUMP ASSY | * | 1 | | | | | FIG 028 |
| 2 | 6215-619-010-00 | WASHER/AIR BLEEDER | * | 2 | | | | | |
| 3 | 6215-619-009-00 | SCREW/HOLLOW | * | 1 | | | | | |
| 4 | 6219-752-045-00 | SHIM/INJECTIONPUMP | * | 1 | | | | | |
| 5 | 6219-752-044-00 | SHIM/INJECTIONPUMP | * | 1 | | | | | |
| 6 | 6219-752-046-00 | SHIM/INJECTIONPUMP | * | 1 | | | | | |
| 7 | 6219-752-047-00 | SHIM/INJECTIONPUMP | * | 1 | | | | | |
| 8 | V201-360-802-00 | BOLT/M8X20/7T | * | 2 | | | | | |
| 9 | 3817-401-001-00 | NUT/M08 | * | 2 | | | | | |
| 10 | 6215-621-016-20 | CAMSHAFT/INJECTION P | * | 1 -413207 | | | | | |
| 10A | 6215-621-016-30 | CAMSHAFT/INJECTION P | * | 1 413208- | | 3 | | | |
| 11 | 6212-524-002-30 | GEAR/INJECTIONPUMP | * | 1 -413327 | | | | | |
| 11A | 6212-524-002-40 | GEAR/INJECTIONPUMP | * | 1 413328- | | 3 | | | |
| 12 | 6209-730-005-00 | KEY/07X05X09 | * | 1 | | | | | |
| 13 | V600-110-620-30 | BEARING,RB/6203 | * | 1 | | | | | |
| 14 | 1729-202-001-00 | BEARING/BALL | * | 1 | | | | | |
| 15 | 6212-535-002-00 | PLATE,THRUST INJPUMP | * | 1 -406030 | | | | | |
| 15A | 6212-535-010-10 | PLATE/THRUST/INJECTI | * | 1 406031- | | | | | |
| 16 | V210-560-601-20 | BOLT,S/M6X12/7T | * | 1 | | | | | |
| 17 | 6215-520-001-00 | FLYWEIGHT | * | 1 | | | | | |
| 18 | 6209-030-043-00 | BOLT/M6X10 | * | 3 | | | | | |
| 19 | 6215-526-004-00 | THRUSTPIECE | * | 1 | | | | | |
| 20 | 6215-541-001-10 | ARM/FLOATING COMP | * | 1 | | | | | |
| 21 | 6215-543-002-10 | RINK/CONTROL | * | 1 | | | | | |
| 22 | 6215-542-006-00 | PIN,CONTROL | * | 1 | | | | | |
| 23 | V710-140-004-00 | RING,SNAP/4 E | * | 1 | | | | | |
| 24 | 6215-531-025-00 | SPRING/GOVERNOR | * | 1 | | | | | |
| 25 | 6215-541-012-20 | LEVER(CONTROL) COMP | * | 1 | | | | | |
| 26 | 6209-044-001-00 | BOLT/M6X18 | * | 1 | | | | | |
| 27 | V302-260-006-00 | NUT/M6 | * | 2 | | | | | |

# FIG. 21 INJECTION PUMP

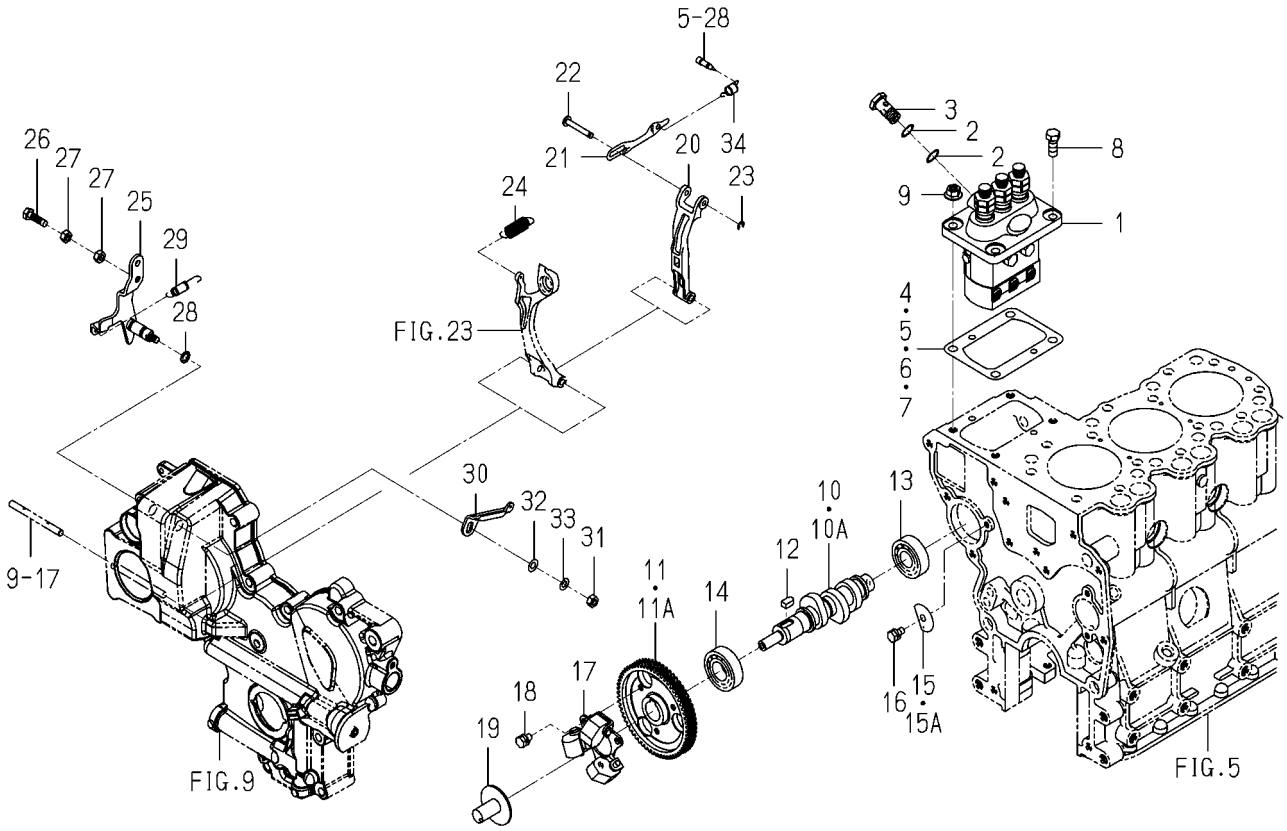


6004-511Q-0100

| KEY | PART CODE | DESCRIPTION | SPC | TYPE OF MODEL E3112 UP03 | | ITC | COL | GRP | REMARKS |
|---|---|---|---|---|---|---|---|---|---|
| 28 | V720-101-900-80 | O-RING/1A,P8 | * | 1 | | | | | |
| 29 | 6209-580-002-10 | SPRING,RETURN | * | 1 | | | | | |
| 30 | 6215-549-007-10 | ARM/CONTROL | * | 1 | | | | | |
| 31 | V301-260-006-00 | NUT/M6 | * | 1 | | | | | |
| 32 | V411-260-006-00 | WASHER,PL/M6 | * | 1 | | | | | |
| 33 | V401-160-006-00 | WASHER,SP/M6 | * | 1 | | | | | |
| 34 | 6215-549-012-00 | SPRING,STARTING | * | 1 | | | | | |

# FIG. 22 FUEL PIPE

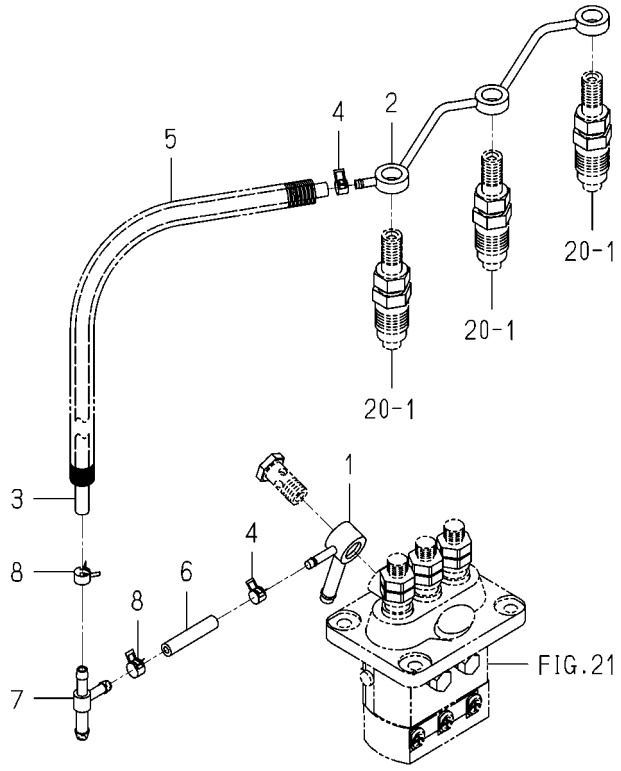


6004-550N-0100

| KEY | PART CODE | DESCRIPTION | SPC | TYPE OF MODEL E3112 UP03 | | ITC | COL | GRP | REMARKS |
|---|---|---|---|---|---|---|---|---|---|
| 1 | 6215-412-004-00 | CONNECTOR/FUEL | * | 1 | | | | | |
| 2 | 6215-411-125-00 | PIPE/FUEL | * | 1 | | | | | |
| 3 | 6209-360-018-00 | HOSE/RUBBER/160 | * | 1 | | | | | |
| 4 | J062-076-082-00 | CLIP/HOSE/7.6-8.2 | * | 2 | | | | | |
| 5 | 6209-360-143-00 | CORRUGATEDTUBE | * | 1 | | | | | |
| 6 | 6209-360-006-00 | HOSE,RUBBER | * | 1 | | | | | |
| 7 | 3643-586-001-00 | JOINTT-TYPE | * | 1 | | | | | |
| 8 | J062-087-093-00 | CLIP/HOSE/8.7-9.3 | * | 2 | | | | | |

# FIG. 23 ADAPTER

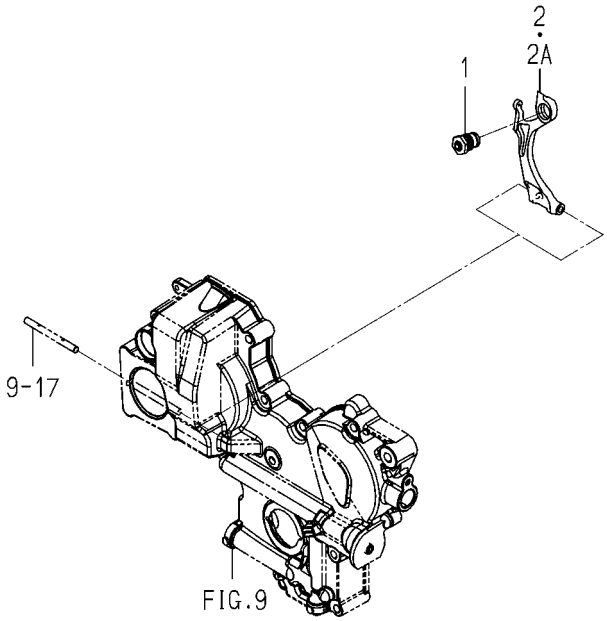


6004-560Q-0100

| KEY | PART CODE | DESCRIPTION | SPC | TYPE OF MODEL E3112 UP03 | | ITC | COL | GRP | REMARKS |
|---|---|---|---|---|---|---|---|---|---|
| 1 | 6215-548-082-20 | ADAPTER/320X080 ASSY | * | 1 | | | | | |
| 2 | 6215-541-016-40 | ARM/TENSION | * | 1 -435736 | | | | | |
| 2A | 6215-541-016-50 | ARM/TENSION | * | 1 435737- | | 1 | | | |

# FIG. 24 ELECTRIC (1)

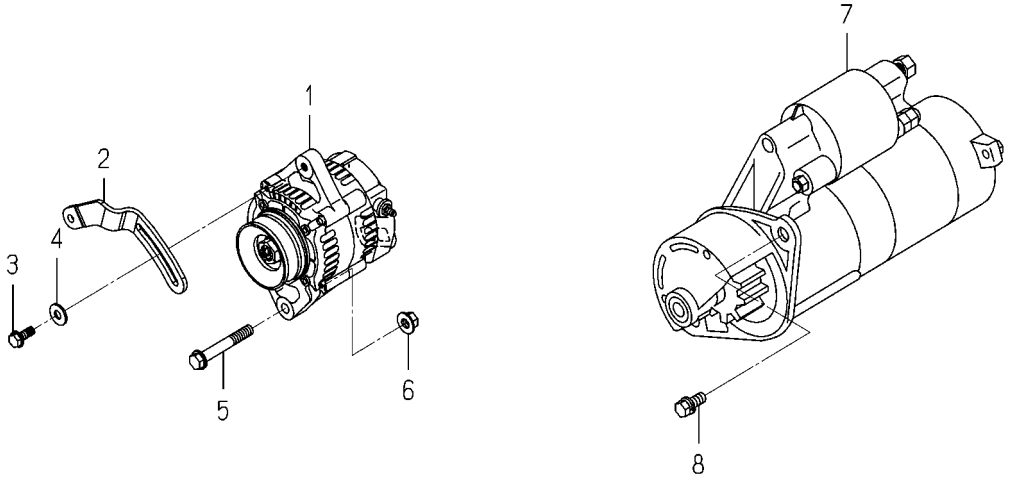


6004-801T-0100,6004-801T-0200

| KEY | PART CODE | DESCRIPTION | SPC | TYPE OF MODEL E3112 UP03 | | ITC | COL | GRP | REMARKS |
|---|---|---|---|---|---|---|---|---|---|
| 1 | 2182-104-520-00 | GENERATOR ASSY | * | 1 | | | | | |
| 2 | 6213-674-046-00 | PLATE/ADJUST | * | 1 | | | | | |
| 3 | V231-360-802-00 | FLANGEBOLT/M8X20 | * | 1 | | | | | |
| 4 | 1373-121-001-00 | WASHER/9X22X2 | * | 1 | | | | | |
| 5 | V233-361-007-00 | FLANGEBOLT/M10X70 | * | 1 | | | | | |
| 6 | 6209-440-007-00 | NUT/FLANGE/M10 | * | 1 | | | | | |
| 7 | 6281-100-014-00 | STARTER ASSY | * | 1 | | | | | FIG 029 |
| 8 | 6901-911-025-00 | BOLT,SEMS/M10X25,7T | * | 2 | | | | | |

# FIG. 25 ELECTRIC (2)

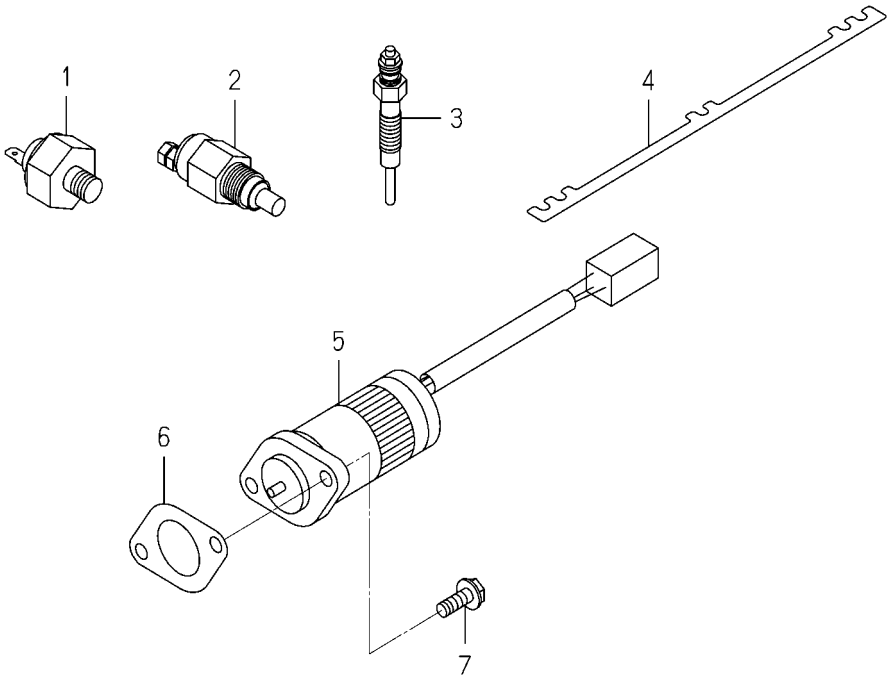


6004-821D-0100,6004-821D-0200

| KEY | PART CODE | DESCRIPTION | SPC | TYPE OF MODEL E3112 UP03 | | ITC | COL | GRP | REMARKS |
|---|---|---|---|---|---|---|---|---|---|
| 1 | 6281-971-001-10 | SWITCH/OILPRESSURE | * | 1 | | | | | |
| 2 | 6282-450-008-00 | SWITCH/OVERHEAT | * | 1 | | | | | |
| 3 | 6281-410-026-10 | GLOWPLUG | * | 3 | | | | | |
| 4 | 6219-732-017-00 | CONNECTOR/GLOWPLUG | * | 1 | | | | | |
| 5 | 6281-910-013-00 | SOLENOID | * | 1 | | | | | |
| 6 | 6209-630-002-10 | GASKET | * | 1 | | | | | |
| 7 | V230-360-601-60 | FLANGEBOLT/M6X16 | * | 2 | | | | | |

# FIG. 26 REPAIR PARTS(OPTION)

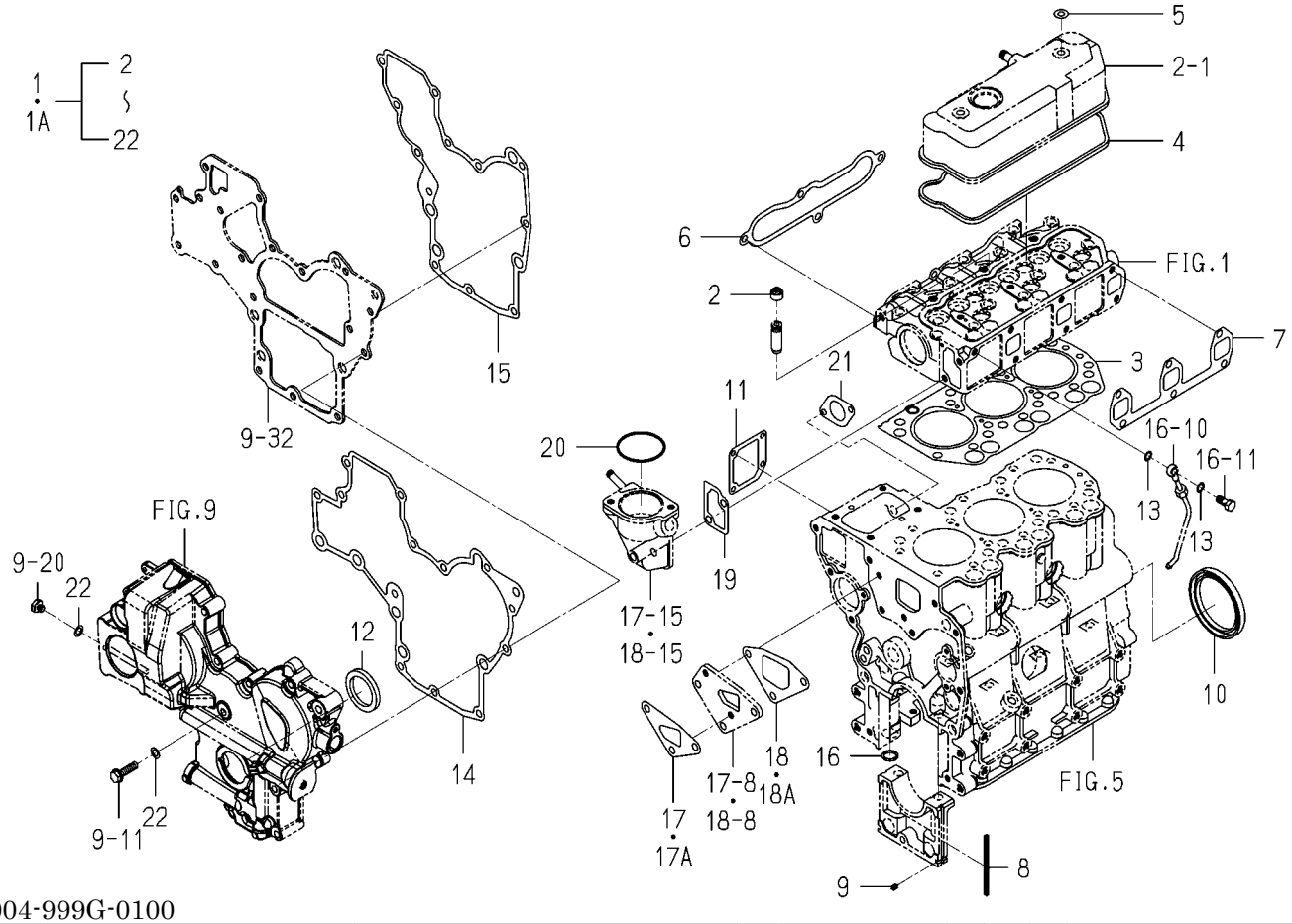


6004-999G-0100

| KEY | PART CODE | DESCRIPTION | SPC | TYPE OF MODEL E3112 UP03 | | ITC | COL | GRP | REMARKS |
|---|---|---|---|---|---|---|---|---|---|
| 1 | 6287-810-035-00 | REPAIR/ENGINE SET | T | 1 -429585 | | | | | |
| 1A | 6287-810-035-10 | REPAIR/ENGINE SET | T | 1 429586- | | 1 | | | |
| 2 | 6212-569-002-00 | SEAL,OIL | T | 6 | | | | | |
| 3 | 6211-141-029-20 | GASKET/CYLINDERHEAD | T | 1 | | | | | |
| 4 | 6211-173-003-00 | SEAL,CYL.HEAD COVER | T | 1 | | | | | |
| 5 | 6209-572-003-00 | GASKET | T | 2 | | | | | |
| 6 | 6214-115-001-20 | GASKET,INLET MANIFOL | T | 1 | | | | | |
| 7 | 6214-145-001-30 | GASKET,EXH.MANIFOLD | T | 1 | | | | | |
| 8 | 6211-258-001-00 | SEAL,BEARING CAP | T | 4 | | | | | |
| 9 | 6211-258-002-00 | SEAL,BEARING CAP/7 | T | 2 | | | | | |
| 10 | 6209-625-001-00 | SEAL,OIL | T | 1 | | | | | |
| 11 | 6211-292-001-20 | GASKET/COVER | T | 1 | | | | | |
| 12 | 6209-625-002-00 | SEAL,OIL | T | 1 | | | | | |
| 13 | 6209-920-002-00 | PACKING | T | 2 | | | | | |
| 14 | 6211-312-003-20 | GASKET/GEARCASE | T | 1 | | | | | |
| 15 | 6211-312-004-20 | GASKET/PLATE | T | 1 | | | | | |
| 16 | V720-102-401-50 | O-RING/1A,P15 | T | 1 | | | | | |
| 17 | 6213-614-003-10 | GASKET/WATER PUMP | T | 1 -429585 | | | | | |
| 17A | 6213-614-018-00 | GASKET/WATERPUMP | T | 1 429586- | | | | | |
| 18 | 6213-614-004-10 | GASKET,SPACER | T | 1 -429585 | | | | | |
| 18A | 6213-614-019-00 | GASKET/SPACER | T | 1 429586- | | | | | |
| 19 | 6213-743-002-10 | GASKET/HOUSING | T | 1 | | | | | |
| 20 | V723-102-005-50 | O-RING/1A,S55 | T | 1 | | | | | |
| 21 | 6209-630-002-10 | GASKET | T | 1 | | | | | |
| 22 | 6209-500-003-00 | WASHER/08X14X01 | T | 2 | | | | | |

# FIG. 27 COMPONENT PARTS FOR 6215-300-036-10 ON Fig.020

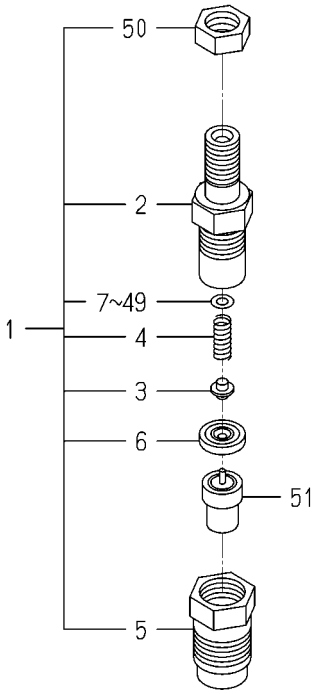


6215-300-036-1B

| KEY | PART CODE | DESCRIPTION | SPC | TYPE OF MODEL E3112 UP03 | | ITC | COL | GRP | REMARKS |
|---|---|---|---|---|---|---|---|---|---|
| 1 | 6215-330-024-10 | HOLDER/NOZZLE ASSY | * | 3 | | | | | |
| 2 | 6215-331-008-00 | BODY/NOZZLE HOLDER | * | 3 | | | | | |
| 3 | 6215-342-001-00 | PIN,NOZZLE HOLDER | * | 3 | | | | | |
| 4 | 6215-343-001-00 | SPRING/NOZZLEHOLDER | * | 3 | | | | | |
| 5 | 6215-332-013-00 | NUT/NOZZLERETAINING | * | 3 | | | | | |
| 6 | 6215-339-001-00 | PIECE,DISTANCE | * | 3 | | | | | |
| 7 | 6215-345-001-00 | WASHER/0.9 | * | 3 | | | | | |
| 8 | 6215-345-002-00 | WASHER/0.925 | * | 3 | | | | | |
| 9 | 6215-345-003-00 | WASHER/0.95 | * | 3 | | | | | |
| 10 | 6215-345-004-00 | WASHER/0.975 | * | 3 | | | | | |
| 11 | 6215-345-005-00 | WASHER/1.0 | * | 3 | | | | | |
| 12 | 6215-345-006-00 | WASHER/1.025 | * | 3 | | | | | |
| 13 | 6215-345-007-00 | WASHER/1.05 | * | 3 | | | | | |
| 14 | 6215-345-008-00 | WASHER/1.075 | * | 3 | | | | | |
| 15 | 6215-345-009-00 | WASHER/1.1 | * | 3 | | | | | |
| 16 | 6215-345-010-00 | WASHER/1.125 | * | 3 | | | | | |
| 17 | 6215-345-011-00 | WASHER/1.15 | * | 3 | | | | | |
| 18 | 6215-345-012-00 | WASHER/1.175 | * | 3 | | | | | |
| 19 | 6215-345-013-00 | WASHER/1.2 | * | 3 | | | | | |
| 20 | 6215-345-014-00 | WASHER/1.225 | * | 3 | | | | | |
| 21 | 6215-345-015-00 | WASHER/1.25 | * | 3 | | | | | |
| 22 | 6215-345-016-00 | WASHER/1.275 | * | 3 | | | | | |
| 23 | 6215-345-017-00 | WASHER/1.3 | * | 3 | | | | | |
| 24 | 6215-345-018-00 | WASHER/1.325 | * | 3 | | | | | |
| 25 | 6215-345-019-00 | WASHER/1.35 | * | 3 | | | | | |
| 26 | 6215-345-020-00 | WASHER/1.375 | * | 3 | | | | | |
| 27 | 6215-345-021-00 | WASHER/1.4 | * | 3 | | | | | |
| 28 | 6215-345-022-00 | WASHER/1.425 | * | 3 | | | | | |
| 29 | 6215-345-023-00 | WASHER/1.45 | * | 3 | | | | | |
| 30 | 6215-345-024-00 | WASHER/1.475 | * | 3 | | | | | |

# FIG. 27 COMPONENT PARTS FOR 6215-300-036-10 ON Fig.020

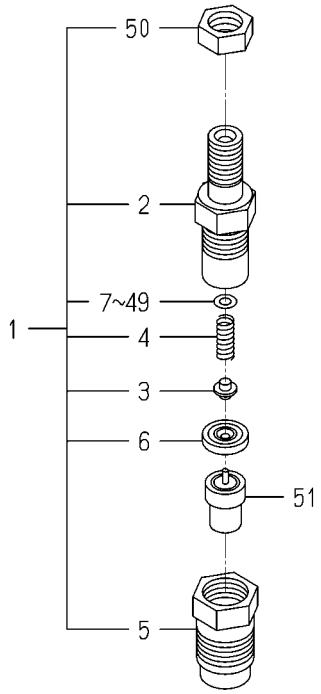


6215-300-036-1B

| KEY | PART CODE | DESCRIPTION | SPC | TYPE OF MODEL E3112 UP03 | | ITC | COL | GRP | REMARKS |
|---|---|---|---|---|---|---|---|---|---|
| 31 | 6215-345-025-00 | WASHER/1.5 | * | 3 | | | | | |
| 32 | 6215-345-026-00 | WASHER/1.525 | * | 3 | | | | | |
| 33 | 6215-345-027-00 | WASHER/1.55 | * | 3 | | | | | |
| 34 | 6215-345-028-00 | WASHER/1.575 | * | 3 | | | | | |
| 35 | 6215-345-029-00 | WASHER/1.6 | * | 3 | | | | | |
| 36 | 6215-345-030-00 | WASHER/1.625 | * | 3 | | | | | |
| 37 | 6215-345-031-00 | WASHER/1.65 | * | 3 | | | | | |
| 38 | 6215-345-032-00 | WASHER/1.675 | * | 3 | | | | | |
| 39 | 6215-345-033-00 | WASHER/1.7 | * | 3 | | | | | |
| 40 | 6215-345-034-00 | WASHER/1.725 | * | 3 | | | | | |
| 41 | 6215-345-035-00 | WASHER/1.75 | * | 3 | | | | | |
| 42 | 6215-345-036-00 | WASHER/1.775 | * | 3 | | | | | |
| 43 | 6215-345-037-00 | WASHER/1.8 | * | 3 | | | | | |
| 44 | 6215-345-038-00 | WASHER/1.825 | * | 3 | | | | | |
| 45 | 6215-345-039-00 | WASHER/1.85 | * | 3 | | | | | |
| 46 | 6215-345-040-00 | WASHER/1.875 | * | 3 | | | | | |
| 47 | 6215-345-041-00 | WASHER/1.9 | * | 3 | | | | | |
| 48 | 6215-345-042-00 | WASHER/1.925 | * | 3 | | | | | |
| 49 | 6215-345-043-00 | WASHER/1.95 | * | 3 | | | | | |
| 50 | 6215-359-002-00 | NUT | * | 3 | | | | | |
| 51 | 6215-311-027-00 | NOZZLE ASSY | * | 3 | | | | | |

# FIG. 28 COMPONENT PARTS FOR 6215-600-156-20 ON Fig.021

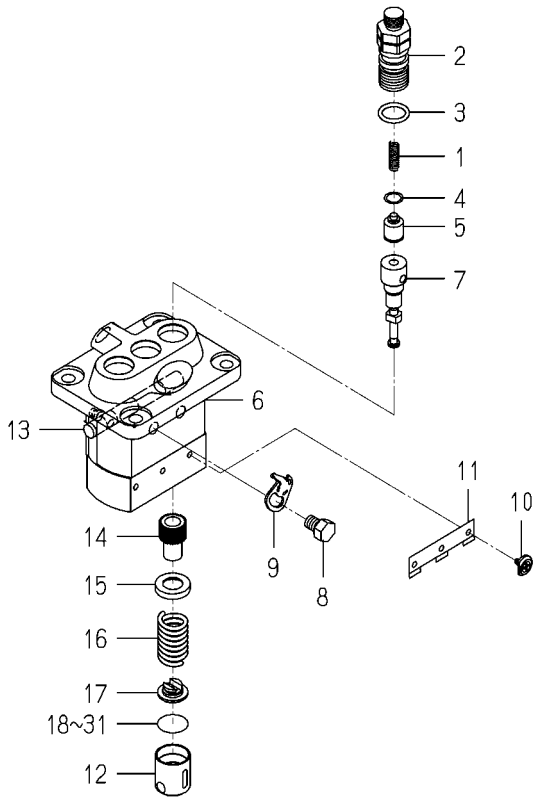


6215-600-156-2E

| KEY | PART CODE | DESCRIPTION | SPC | TYPE OF MODEL E3112 UP03 | | ITC | COL | GRP | REMARKS |
|---|---|---|---|---|---|---|---|---|---|
| 1 | 6215-643-006-00 | SPRING/DELIVERYVALVE | * | 3 | | | | | |
| 2 | 6215-644-007-00 | HOLDER/DELIVERYVALVE | * | 3 | | | | | |
| 3 | 6215-649-019-00 | ORING | * | 3 | | | | | |
| 4 | 6215-649-002-00 | GASKET/DELIVERYVALVE | * | 3 | | | | | |
| 5 | 6215-641-006-00 | VALVE ASSY | * | 3 | | | | | |
| 6 | 6215-611-001-00 | HOUSING ASSY | * | 1 | | | | | |
| 7 | 6215-631-035-00 | ELEMENT ASSY | * | 3 | | | | | |
| 8 | 6215-619-022-00 | BOLT/WASHERHEAD | * | 2 | | | | | |
| 9 | 6215-612-001-00 | PLATE/ADJUSTING | * | 2 | | | | | |
| 10 | 6215-629-001-00 | PIN/INJECTIONPUMP | * | 3 | | | | | |
| 11 | 6215-629-002-00 | PLATE | * | 1 | | | | | |
| 12 | 6215-622-001-00 | TAPPET/INJECTIO ASSY | * | 3 | | | | | |
| 13 | 6215-637-001-00 | RACK/CONTROL ASSY | * | 1 | | | | | |
| 14 | 6215-635-001-00 | SLEEVE/PLUNGER | * | 3 | | | | | |
| 15 | 6215-639-004-00 | SEAT/SPRING/UPPER | * | 3 | | | | | |
| 16 | 6215-634-001-00 | SPRING/PUMPPLUNGER | * | 3 | | | | | |
| 17 | 6215-639-005-00 | SEAT/SPRING/LOWER | * | 3 | | | | | |
| 18 | 6215-629-003-00 | PLATE/TAPPET/AD 0.6 | * | 1 | | | | | |
| 19 | 6215-629-004-00 | PLATE/TAPPET/AD 0.7 | * | 1 | | | | | |
| 20 | 6215-629-005-00 | PLATE/TAPPET/AD 0.8 | * | 1 | | | | | |
| 21 | 6215-629-006-00 | PLATE/TAPPET/AD 0.9 | * | 1 | | | | | |
| 22 | 6215-629-007-00 | PLATE/TAPPET/AD 1.0 | * | 1 | | | | | |
| 23 | 6215-629-008-00 | PLATE/TAPPET/AD 0.2 | * | 1 | | | | | |
| 24 | 6215-629-009-00 | PLATE/TAPPET/AD 0.3 | * | 1 | | | | | |
| 25 | 6215-629-010-00 | PLATE/TAPPET/AD 0.4 | * | 1 | | | | | |
| 26 | 6215-629-011-00 | PLATE/TAPPET/AD 0.5 | * | 3 | | | | | |
| 27 | 6215-629-012-00 | PLATE/TAPPET/AD 0.25 | * | 1 | | | | | |
| 28 | 6215-629-013-00 | PLATE/TAPPET/AD 0.35 | * | 1 | | | | | |
| 29 | 6215-629-014-00 | PLATE/TAPPET/AD 0.45 | * | 1 | | | | | |
| 30 | 6215-629-015-00 | PLATE/TAPPET/AD 0.55 | * | 1 | | | | | |

# FIG. 28 COMPONENT PARTS FOR 6215-600-156-20 ON Fig.021

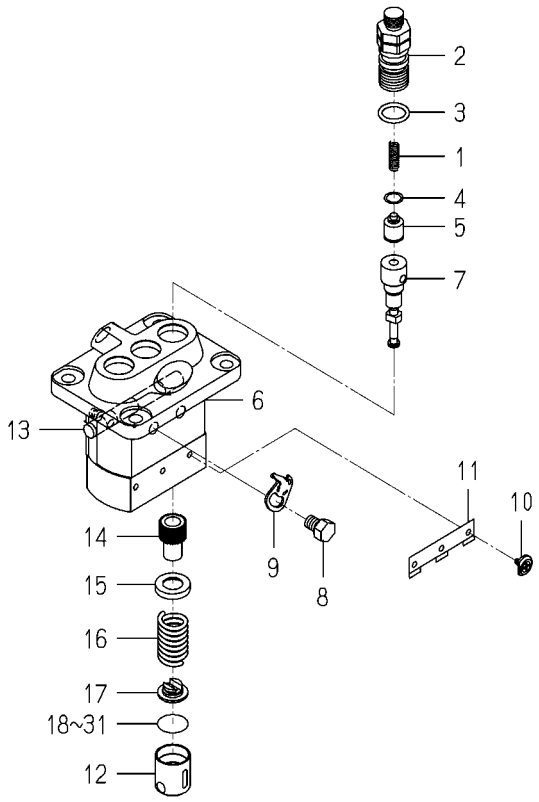


6215-600-156-2E

| KEY | PART CODE | DESCRIPTION | SPC | TYPE OF MODEL E3112 UP03 | | ITC | COL | GRP | REMARKS |
|---|---|---|---|---|---|---|---|---|---|
| 31 | 6215-629-016-00 | PLATE/TAPPET/AD 0.65 | * | 1 | | | | | |

# FIG. 29 COMPONENT PARTS FOR 6281-100-014-00 ON Fig.024

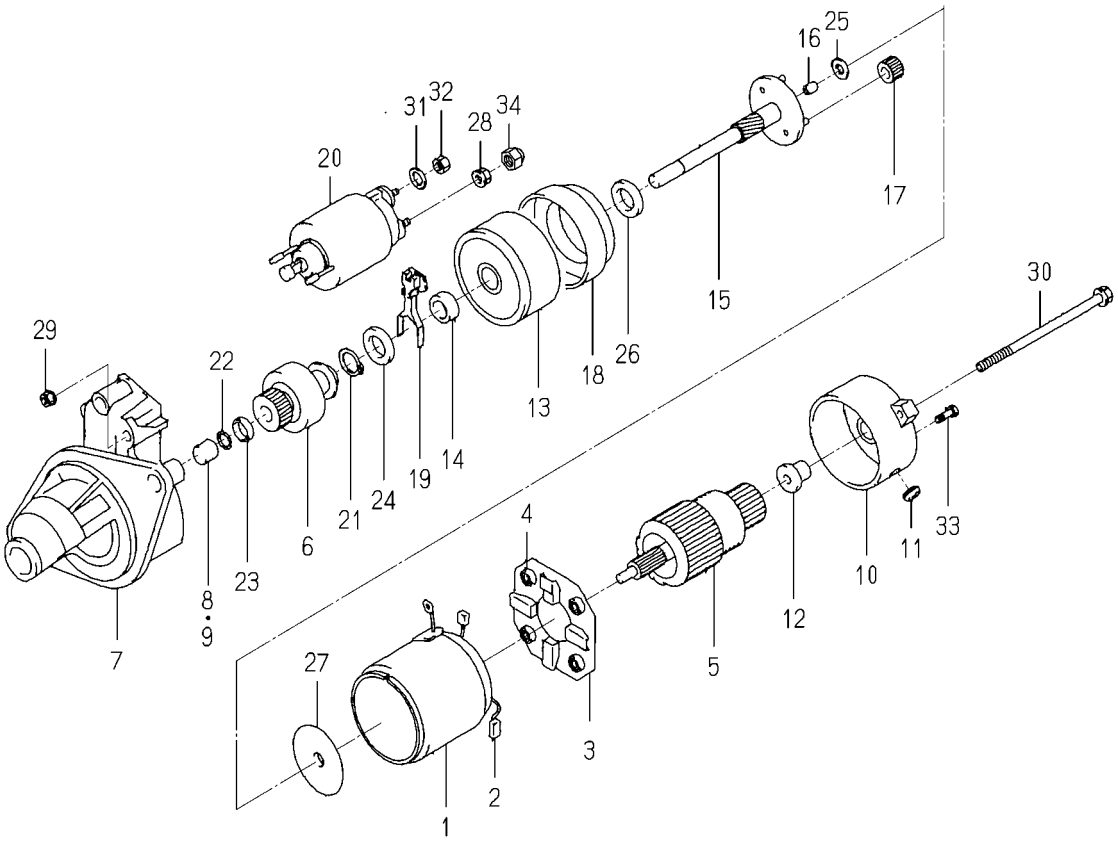


6281-100-014-0A

| KEY | PART CODE | DESCRIPTION | SPC | TYPE OF MODEL E3112 UP03 | | ITC | COL | GRP | REMARKS |
|---|---|---|---|---|---|---|---|---|---|
| 1 | 6281-111-009-00 | YOKE/STARTER ASSY | * | 1 | | | | | |
| 2 | 6281-119-009-00 | BRUSH/STARTER | * | 2 | | | | | |
| 3 | 6281-118-007-00 | HOLDER/STARTER ASSY | * | 1 | | | | | |
| 4 | 6281-117-003-00 | SPRING/STARTERBRUSH | * | 4 | | | | | |
| 5 | 6281-121-010-00 | ARMATURE/STARTE ASSY | * | 1 | | | | | |
| 6 | 6281-124-011-00 | CLUTCH/STARTER ASSY | * | 1 | | | | | |
| 7 | 6281-129-064-00 | HOUSING/STARTER ASSY | * | 1 | | | | | |
| 8 | 6281-129-080-00 | BEARING/NEEDLE | * | 1 | | | | | |
| 9 | 6281-129-058-00 | BEARING/NEEDLE | * | 1 | | | | | |
| 10 | 6281-115-017-00 | FRAME/COMMUTATOR END | * | 1 | | | | | |
| 11 | 6281-115-018-00 | COVER | * | 1 | | | | | |
| 12 | 6281-129-065-00 | BEARING/OILLESS | * | 1 | | | | | |
| 13 | 6281-129-066-00 | BEARING/WITH SHOCKAB | * | 1 | | | | | |
| 14 | 6281-129-067-00 | BEARING/OILLESS | * | 1 | | | | | |
| 15 | 6281-129-068-00 | SHAFT/STARTER PLANET | * | 1 | | | | | |
| 16 | 6281-129-069-00 | BEARING/OILLESS | * | 1 | | | | | |
| 17 | 6281-129-070-00 | GEAR/STARTER PLANETA | * | 3 | | | | | |
| 18 | 6281-129-071-00 | GEAR/STARTERINTERNAL | * | 1 | | | | | |
| 19 | 6281-127-003-00 | LEVER/PINIONDRIVE | * | 1 | | | | | |
| 20 | 6281-151-014-00 | SWITCH/MAGNETIC ASSY | * | 1 | | | | | |
| 21 | 6281-129-072-00 | RING/SNAP | * | 1 | | | | | |
| 22 | 6281-129-073-00 | RING/SNAP | * | 1 | | | | | |
| 23 | 6281-129-074-00 | NUT/PINIONSTOP | * | 1 | | | | | |
| 24 | 6281-129-075-00 | WASHER/SK | * | 1 | | | | | |
| 25 | 6281-129-076-00 | WASHER/SK | * | 1 | | | | | |
| 26 | 6281-129-077-00 | WASHER/SK | * | 1 | | | | | |
| 27 | 6281-129-078-00 | PLATE | * | 1 | | | | | |
| 28 | 6281-129-030-00 | NUT | * | 1 | | | | | |
| 29 | 6281-129-029-00 | NUT | * | 2 | | | | | |
| 30 | 6281-129-043-00 | BOLT/THROUGH | * | 2 | | | | | |

# FIG. 29 COMPONENT PARTS FOR 6281-100-014-00 ON Fig.024

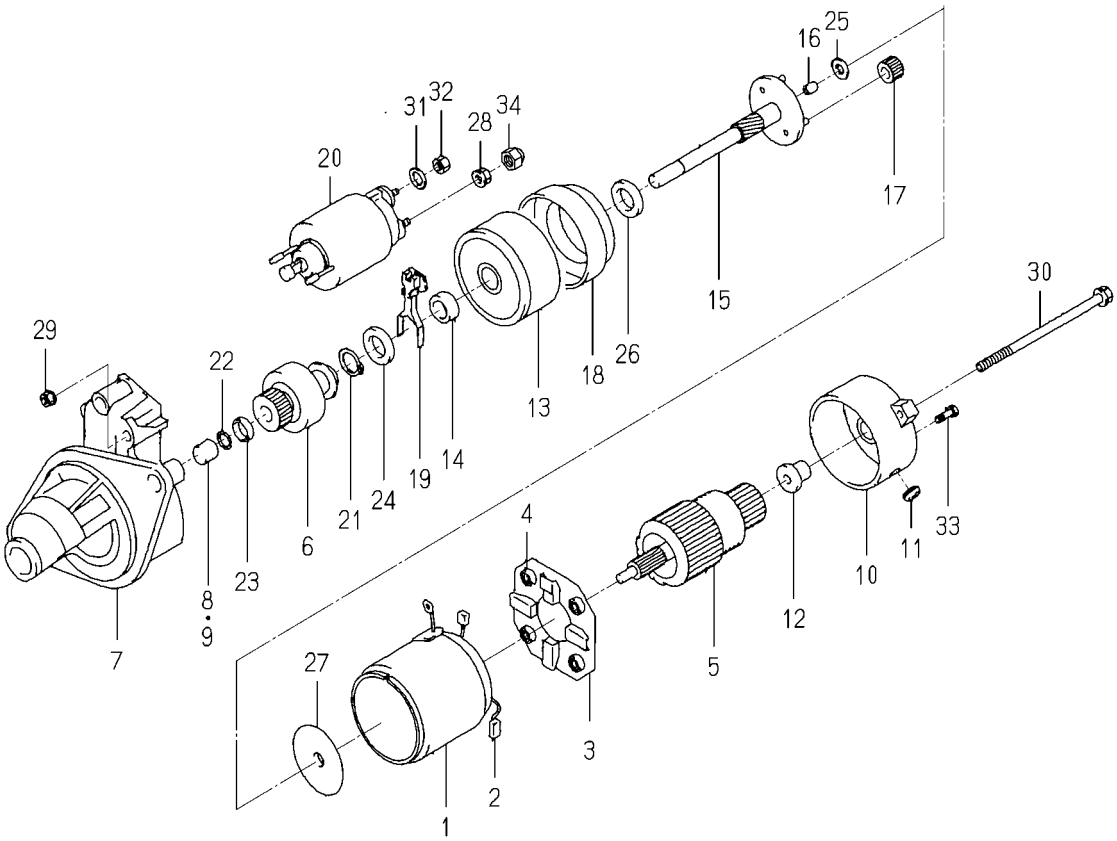


6281-100-014-0A

| KEY | PART CODE | DESCRIPTION | SPC | TYPE OF MODEL E3112 UP03 | | ITC | COL | GRP | REMARKS |
|---|---|---|---|---|---|---|---|---|---|
| 31 | 6909-150-508-00 | WASHER | * | 1 | | | | | |
| 32 | 6909-110-408-00 | NUT/M8 | * | 1 | | | | | |
| 33 | 6281-129-062-00 | SCREW | * | 2 | | | | | |
| 34 | 6281-129-079-00 | NUT | * | 1 | | | | | |

# C H A S S I S

# FIG. 1 BRACKET(ENGINE)&MUFFLER SYSTEM

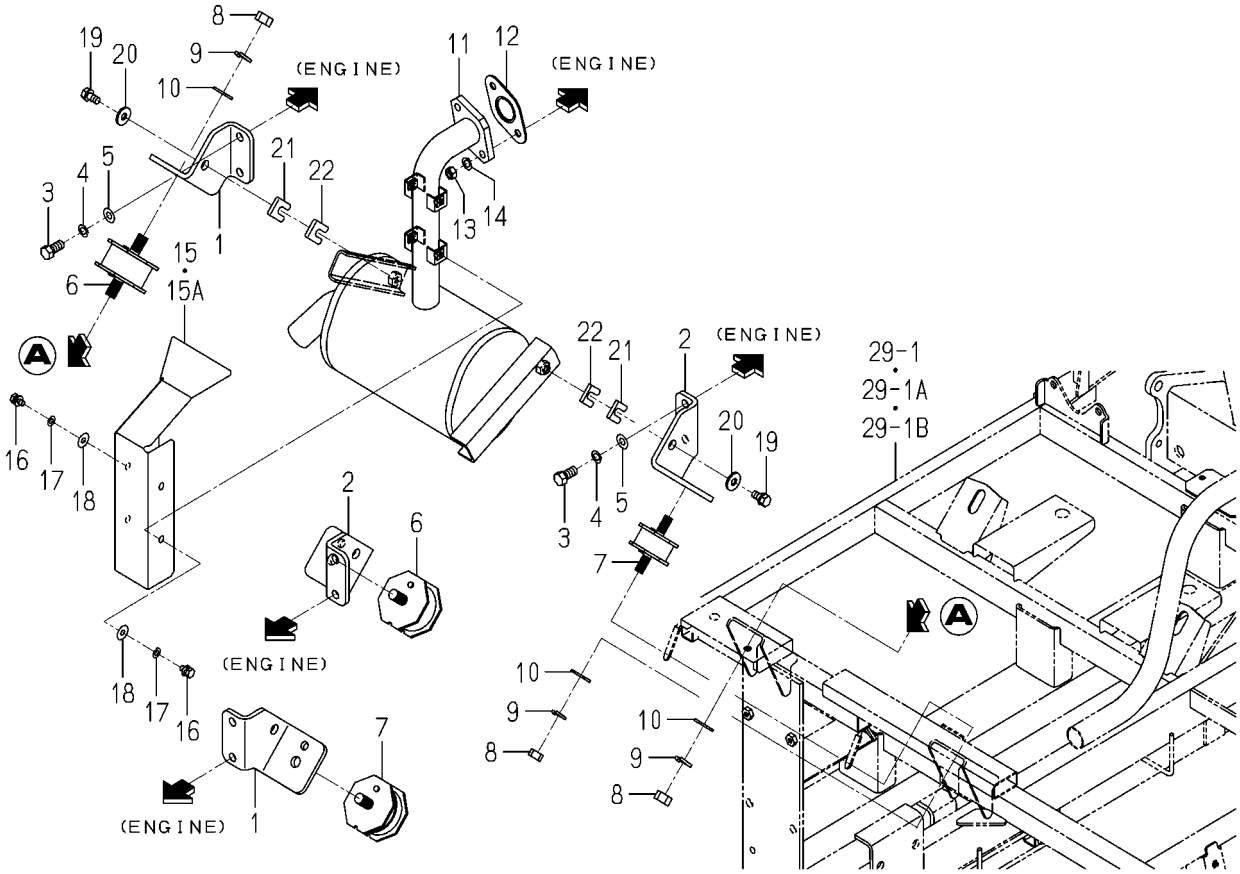


2233-101 -0100

| KEY | PART CODE | DESCRIPTION | SPC | TYPE OF MODEL NP80D | TYPE OF MODEL E16 | ITC | COL | GRP | REMARKS |
|---|---|---|---|---|---|---|---|---|---|
| 1 | 2213-101-001-10 | BRACKET/ENGINE/A | * | 2 | | | | | |
| 2 | 2213-101-002-10 | BRACKET/ENGINE/B | * | 2 | | | | | |
| 3 | V203-461-002-20 | BOLT/M10X22/9T,P1.25 | * | 8 | | | | | |
| 4 | V401-160-010-00 | WASHER,SP/M10 | * | 8 | | | | | |
| 5 | V411-260-010-00 | WASHER,PL/M10 | * | 8 | | | | | |
| 6 | 3623-150-003-10 | INSULATOR/MOUNT/LH | * | 2 | | | | | |
| 7 | 3656-302-009-10 | INSULATOR/MOUNT/34 | * | 2 | | | | | |
| 8 | V304-260-012-00 | NUT/M12 | * | 8 | | | | | |
| 9 | V401-160-012-00 | WASHER,SP/M12 | * | 8 | | | | | |
| 10 | V411-260-012-00 | WASHER,PL/M12 | * | 8 | | | | | |
| 11 | 2233-101-500-10 | MUFFLER/D COMP | * | 1 | | | | | |
| 12 | 3659-301-001-00 | GASKET | * | 1 | | | | | |
| 13 | V304-700-008-00 | NUT,SUS/M8 | * | 2 | | | | | |
| 14 | V401-700-008-00 | WASHER,SP/M8 | * | 2 | | | | | |
| 15 | 2233-101-007-00 | COVER/EXAUST/NP8 | * | 1 -80 | | | | | |
| 15A | 2233-101-007-10 | COVER/EXAUST/NP8 | * | 1 81- | | 1 | | | |
| 16 | V200-700-601-20 | BOLT,SUS/M6X12 | * | 4 | | | | | |
| 17 | V401-700-006-00 | WASHER,SP/M6 | * | 4 | | | | | |
| 18 | 3560-503-302-00 | WASHER,WIRE TENSION | * | 4 | | | | | |
| 19 | V211-260-802-00 | BOLT,S/M8X20 | * | 2 | | | | | |
| 20 | 4106-102-028-00 | WASHER | * | 2 | | | | | |
| 21 | 2213-101-015-10 | SHIM/MUFFLER | * | 2 | | | | | |
| 22 | 2213-101-016-00 | SHIM/MUFFLER | * | 2 | | | | | |

# FIG. 2 RADIATOR&CLEANER(AIR)SYSTEM

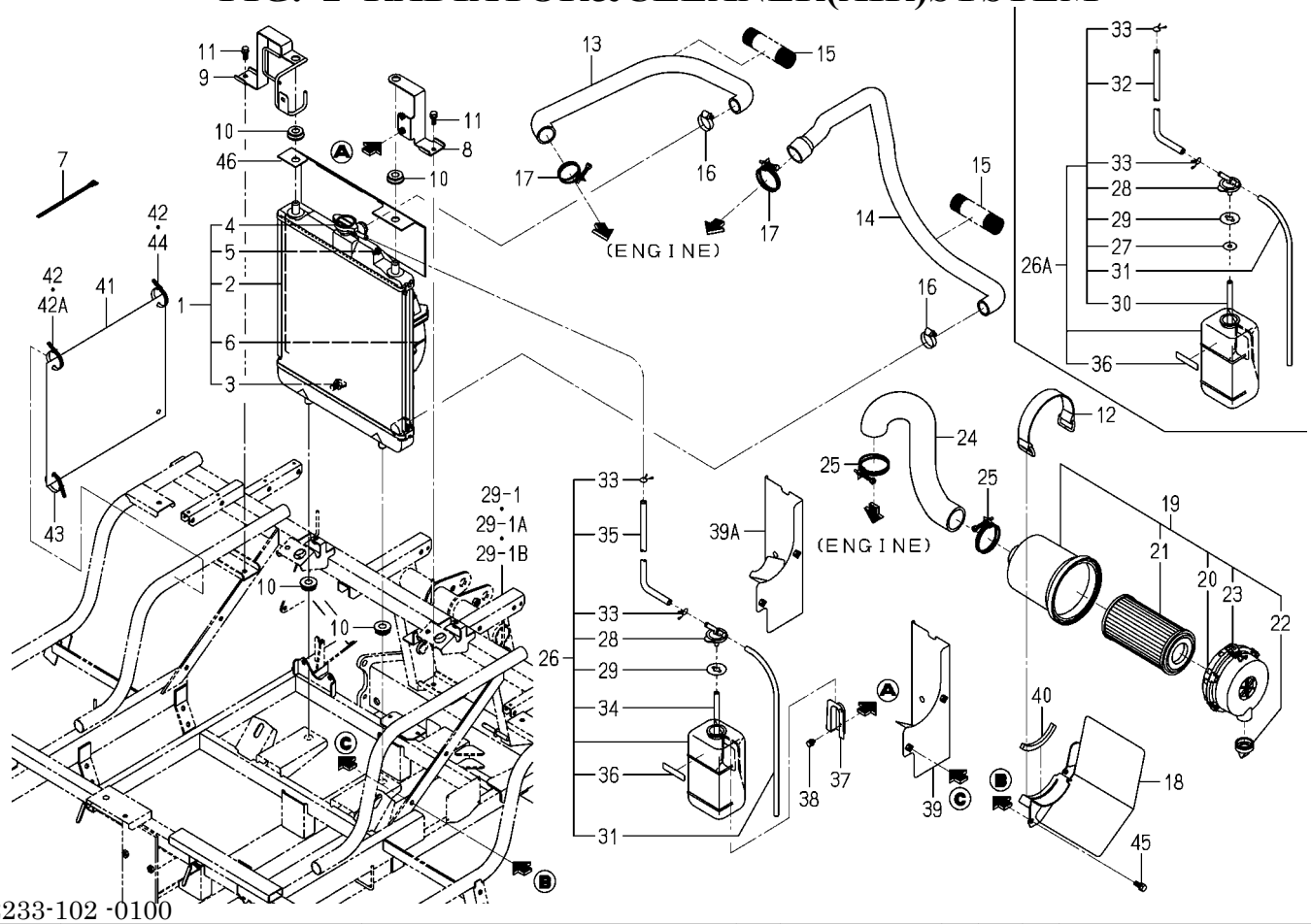


2233-102 -0100

| KEY | PART CODE | DESCRIPTION | SPC | TYPE OF MODEL NP80D | TYPE OF MODEL E16 | ITC | COL | GRP | REMARKS |
|---|---|---|---|---|---|---|---|---|---|
| 1 | 2213-102-400-00 | RADIATOR ASSY | * | 1 | | | | | |
| 2 | 2213-102-401-00 | RADIATOR/SUB ASSY | * | 1 | | | | | |
| 3 | 2213-102-402-00 | COCK ASSY | * | 1 | | | | | |
| 4 | 2213-102-403-00 | PRESSURECAP | * | 1 | | | | | |
| 5 | 2213-102-404-00 | FLANGEBOLT | * | 2 | | | | | |
| 6 | 2213-102-405-00 | SHROUDFAN ASSY | * | 1 | | | | | |
| 7 | 1421-621-038-00 | BAND,WIRE/170 | * | 1 | 81- | | | | |
| 8 | 2233-102-230-00 | STAY/RADIATOR/L COMP | * | 1 | | | | | |
| 9 | 2233-102-220-10 | STAY/RADIATOR/R COMP | * | 1 | | | | | |
| 10 | 1719-730-002-00 | GROMMET/15X17X05 | * | 4 | | | | | |
| 11 | V211-260-802-00 | BOLT,S/M8X20 | * | 2 | | | | | |
| 12 | 3640-260-200-30 | BATTERYSTAY COMP | * | 1 | | | | | |
| 13 | 2233-101-004-00 | HOSE/RADIATOR/UPPER | * | 1 | | | | | |
| 14 | 2233-101-005-10 | HOSE/RADIATOR/ROWER | * | 1 | | | | | |
| 15 | 2213-102-002-00 | CORRUGATETUBE/28X120 | * | 2 | | | | | |
| 16 | J061-123-035-00 | CLAMP/WORM/23-35 | * | 2 | | | | | |
| 17 | J061-238-046-00 | CLAMP/WIRE/38-46 | * | 2 | | | | | |
| 18 | 2233-102-250-30 | STAY/AIRCLEANER COMP | * | 1 | | | | | |
| 19 | 1728-104-210-00 | CLEANER/AIR ASSY | * | 1 | | | | | |
| 20 | 1675-104-211-00 | COVER ASSY | * | 1 | | | | | |
| 21 | 1675-104-213-00 | ELEMENT ASSY | * | 1 | | | | | |
| 22 | 1544-104-205-00 | VALVE | * | 1 | | | | | |
| 23 | 1650-104-201-00 | CLIP | * | 2 | | | | | |
| 24 | 2233-101-006-00 | HOSE/AIRCLEANER | * | 1 | | | | | |
| 25 | J061-249-060-00 | CLAMP/WIRE/49-60 | * | 2 | | | | | |
| 26 | 3805-301-320-00 | TANK,RESERVE | * | 1 | -80 | | | | |
| 26A | 3805-301-320-10 | RESERVETANK | * | 1 | 81- | 1 | | | |
| 27 | 3872-301-301-00 | ANGLE | * | 1 | 81- | | | | |
| 28 | 6221-408-008-00 | CAP | * | 1 | | | | | |
| 29 | 6221-408-009-00 | PACKING | * | 1 | | | | | |

# FIG. 2 RADIATOR&CLEANER(AIR)SYSTEM

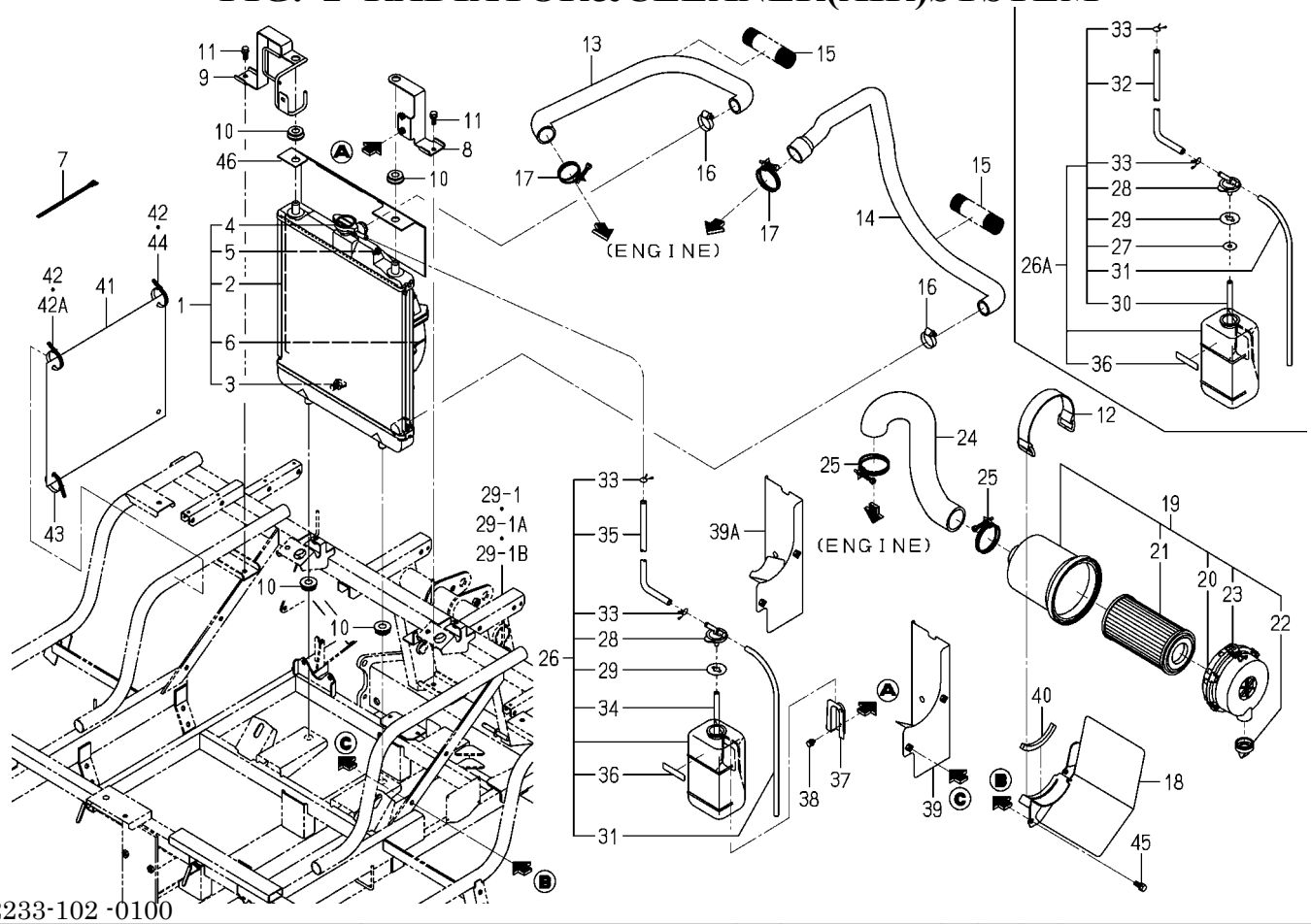


2233-102 -0100

| KEY | PART CODE | DESCRIPTION | SPC | TYPE OF MODEL NP80D | TYPE OF MODEL E16 | ITC | COL | GRP | REMARKS |
|---|---|---|---|---|---|---|---|---|---|
| 30 | 3872-301-302-00 | HOSE/RUBBER | * | 1 81- | | | | | |
| 31 | 6221-408-011-00 | PIPE | * | 1 | | | | | |
| 32 | 3872-301-303-00 | HOSE/RUBBER | * | 1 81- | | | | | |
| 33 | 6221-408-013-00 | CLAMP | * | 2 | | | | | |
| 34 | 6221-408-010-00 | HOSE/RUBBER | * | 1 -80 | | | | | |
| 35 | 3805-301-321-00 | HOSE/RUBBER | * | 1 -80 | | | | | |
| 36 | 6221-408-007-00 | PLATE/CAUTION | * | 1 -80 | | | | | |
| 37 | 6221-408-003-00 | BRACKET/RESERVE TANK | * | 1 | | | | | |
| 38 | V210-360-601-20 | BOLT,SP/M6X12 | * | 2 | | | | | |
| 39 | 2233-102-350-20 | COVER/RADIATOR/RH | * | 1 -175 | | | | | |
| 39A | 2233-102-350-30 | COVER/RADIATOR/LH | * | 1 176- | | 1 | | | |
| 40 | 2161-320-001-00 | MOLE/70 | * | 1 | | | | | |
| 41 | 2233-102-008-00 | COVER/RADIATOR/RH | * | 1 | | | | | |
| 42 | 1376-402-003-00 | BAND,WIRE/140 | * | 2 -80 | | | | | |
| 42A | 1376-402-003-00 | BAND,WIRE/140 | * | 1 81- | | | | | |
| 43 | 1421-621-038-00 | BAND,WIRE/170 | * | 1 | | | | | |
| 44 | 1342-402-006-00 | BAND,WIRE/250 | * | 1 81- | | | | | |
| 45 | V211-260-802-00 | BOLT,S/M8X20 | * | 2 | | | | | |
| 46 | 2232-102-023-00 | COVER/RADIATOR/UPPER | * | 1 | | | | | |

# FIG. 3 PULLEY(ENGINE)SYSTEM

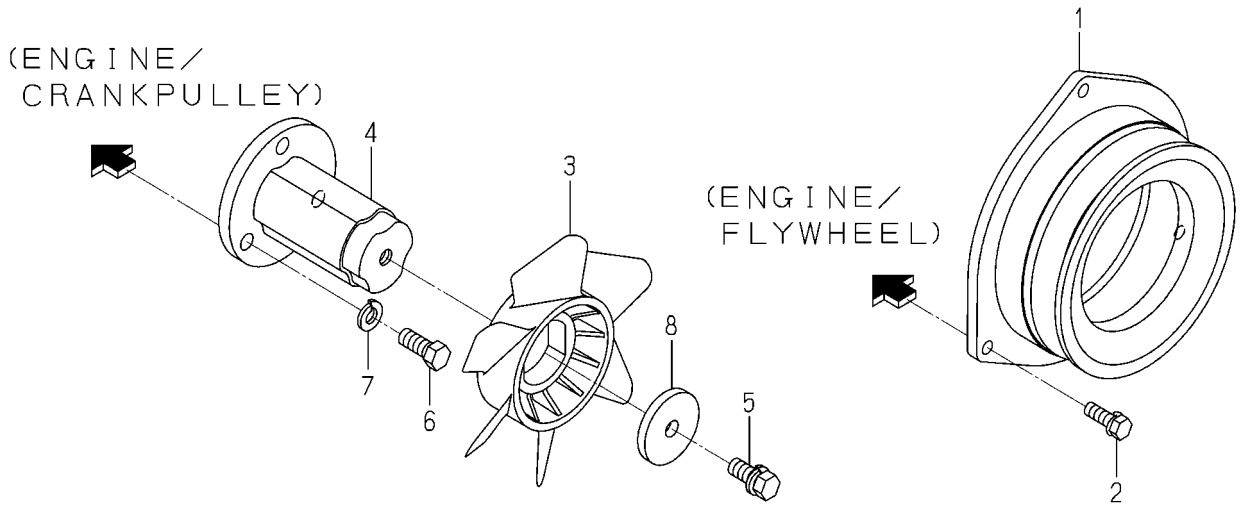


2233-105 -0100

| KEY | PART CODE | DESCRIPTION | SPC | TYPE OF MODEL NP80D E16 | | ITC | COL | GRP | REMARKS |
|---|---|---|---|---|---|---|---|---|---|
| 1 | 2233-105-003-00 | PULLEY/VC140 | * | 1 | | | | | |
| 2 | V211-260-802-50 | BOLT,S/M8X25 | * | 3 | | | | | |
| 3 | 2232-105-007-10 | FUN/COOLING/NP | * | 1 | | | | | |
| 4 | 2233-105-004-10 | BASE/COOLINGFAN/D | * | 1 | | | | | |
| 5 | 2204-601-007-10 | BOLT/SEAL/M10X25/S | * | 1 | | | | | |
| 6 | V203-461-002-50 | BOLT/M10X25/9T,P1.25 | * | 3 | | | | | |
| 7 | V401-160-010-00 | WASHER,SP/M10 | * | 3 | | | | | |
| 8 | 2204-105-013-00 | WASHER/11X46X06 | * | 1 | | | | | |

# FIG. 4 TENSION(BELT/ENGINE)SYSTEM

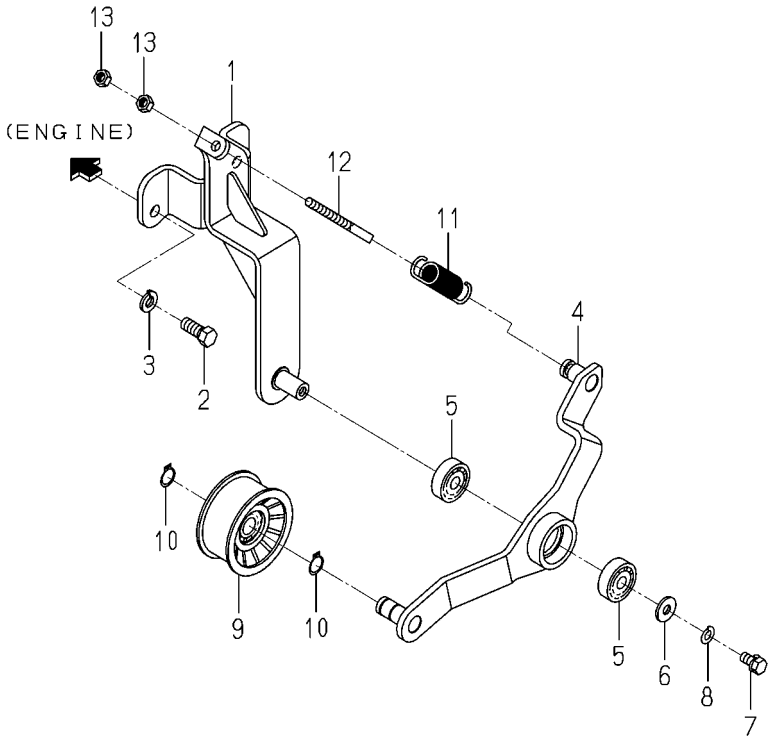


2233-106 -0100

| KEY | PART CODE | DESCRIPTION | SPC | TYPE OF MODEL NP80D | E16 | ITC | COL | GRP | REMARKS |
|---|---|---|---|---|---|---|---|---|---|
| 1 | 2233-106-210-20 | BASE/TENSION/D COMP | * | 1 | | | | | |
| 2 | V203-461-002-50 | BOLT/M10X25/9T,P1.25 | * | 2 | | | | | |
| 3 | V401-160-010-00 | WASHER,SP/M10 | * | 2 | | | | | |
| 4 | 2233-106-200-10 | ARM/TENSION COMP | * | 1 | | | | | |
| 5 | V600-150-620-20 | BEARING,RB/6202SS | * | 2 | | | | | |
| 6 | 4106-102-028-00 | WASHER | * | 1 | | | | | |
| 7 | V201-360-801-60 | BOLT/M8X16/7T | * | 1 | | | | | |
| 8 | V401-160-008-00 | WASHER,SP/M8 | * | 1 | | | | | |
| 9 | 3737-314-003-00 | PULLEY,TENSION/70BS | * | 1 | | | | | |
| 10 | V704-140-015-00 | RING,SNAP/15 C | * | 2 | | | | | |
| 11 | 2188-105-004-00 | SPRING/HE089 | * | 1 | | | | | |
| 12 | 2142-407-002-10 | ROD,ADJUST/90 | * | 1 | | | | | |
| 13 | V304-260-008-00 | NUT/M8 | * | 2 | | | | | |

# FIG. 5 TANK(FUEL)SYSTEM

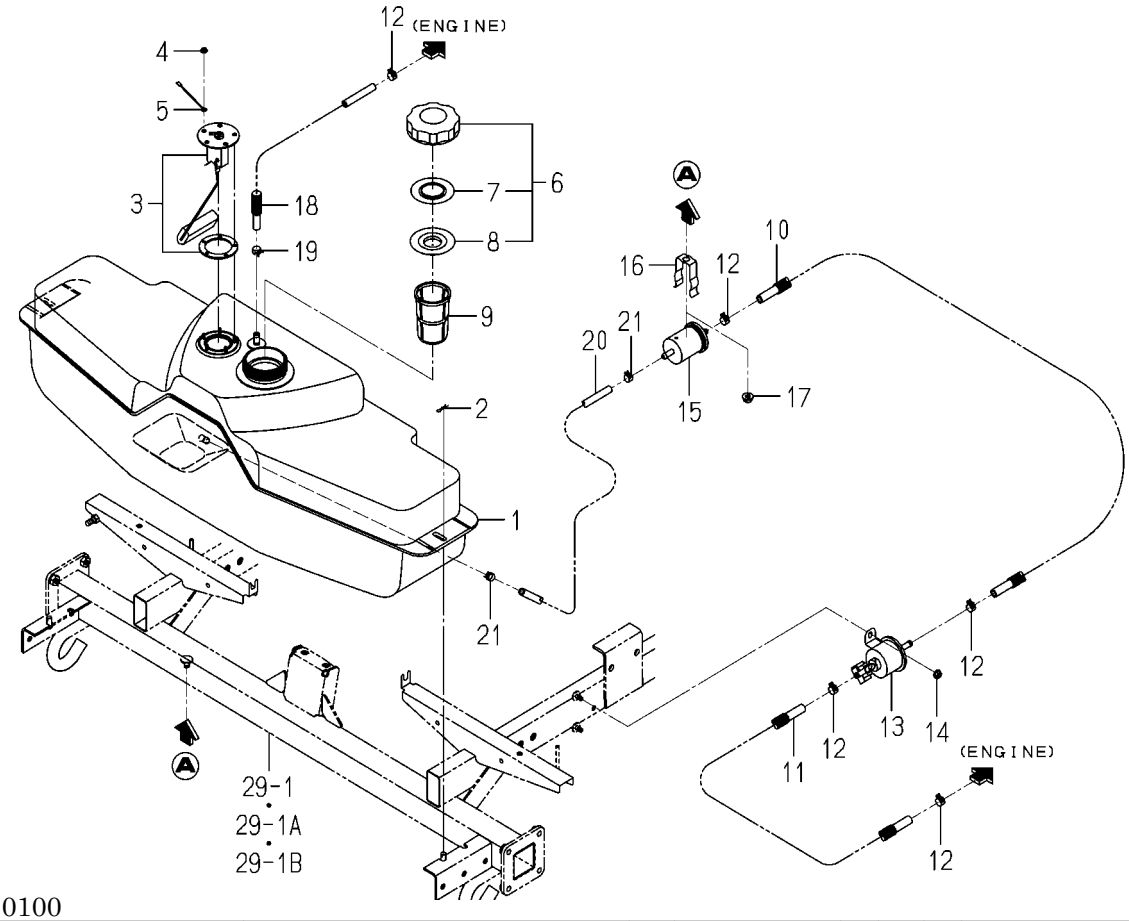


2233-111K-0100

| KEY | PART CODE | DESCRIPTION | SPC | TYPE OF MODEL NP80D E16 | | ITC | COL | GRP | REMARKS |
|---|---|---|---|---|---|---|---|---|---|
| 1 | 2232-111-001-10 | TANK/FUEL/NP | * | 1 | | | | | |
| 2 | 3908-170-020-00 | PIN/SNAP/08 | * | 2 | | | | | |
| 3 | 2213-111-300-10 | GAUGE/FUEL/0-57 ASSY | * | 1 | | | | | |
| 4 | V360-260-004-00 | NUT/WASHER/M4 | * | 5 | | | | | |
| 5 | 2204-111-006-10 | HARNESS/SWGND/5 | * | 1 | | | | | |
| 6 | 1729-111-280-20 | CAP/TANK/NONLEA ASSY | * | 1 | | | | | |
| 7 | 1729-111-283-00 | PLATE | * | 1 | | | | | |
| 8 | 1729-111-284-00 | PACKING | * | 1 | | | | | |
| 9 | 1729-111-006-10 | FILTER/FUEL | * | 1 | | | | | |
| 10 | 2232-111-007-00 | HOSE/FUEL/340 | * | 1 | | | | | |
| 11 | 2232-111-006-00 | HOSE/FUEL/1280 | * | 1 | | | | | |
| 12 | J062-126-134-00 | CLIP/HOSE/12.6-13.4 | * | 5 | | | | | |
| 13 | 2221-111-200-10 | PUMP/FUEL ASSY | * | 1 | | | | | |
| 14 | V360-260-006-00 | NUT/WASHER/M6 | * | 2 | | | | | |
| 15 | 3830-311-210-00 | FILTER,FUEL | * | 1 | | | | | |
| 16 | 6219-755-001-00 | HOLDER(FUEL FILTER) | * | 1 | | | | | |
| 17 | V362-260-008-00 | NUT/WASHER/M8 | * | 1 | | | | | |
| 18 | 2213-111-002-10 | HOSE/07X11X1750 | * | 1 | | | | | |
| 19 | J062-119-126-00 | CLIP/HOSE/11.9-12.6 | * | 1 | | | | | |
| 20 | 2204-111-025-00 | HOSE/07X11X460 | * | 1 | | | | | |
| 21 | J062-111-120-00 | CLIP/HOSE/11.1-12.0 | * | 2 | | | | | |

# FIG. 6 LEVER(MAIN)SYSTEM

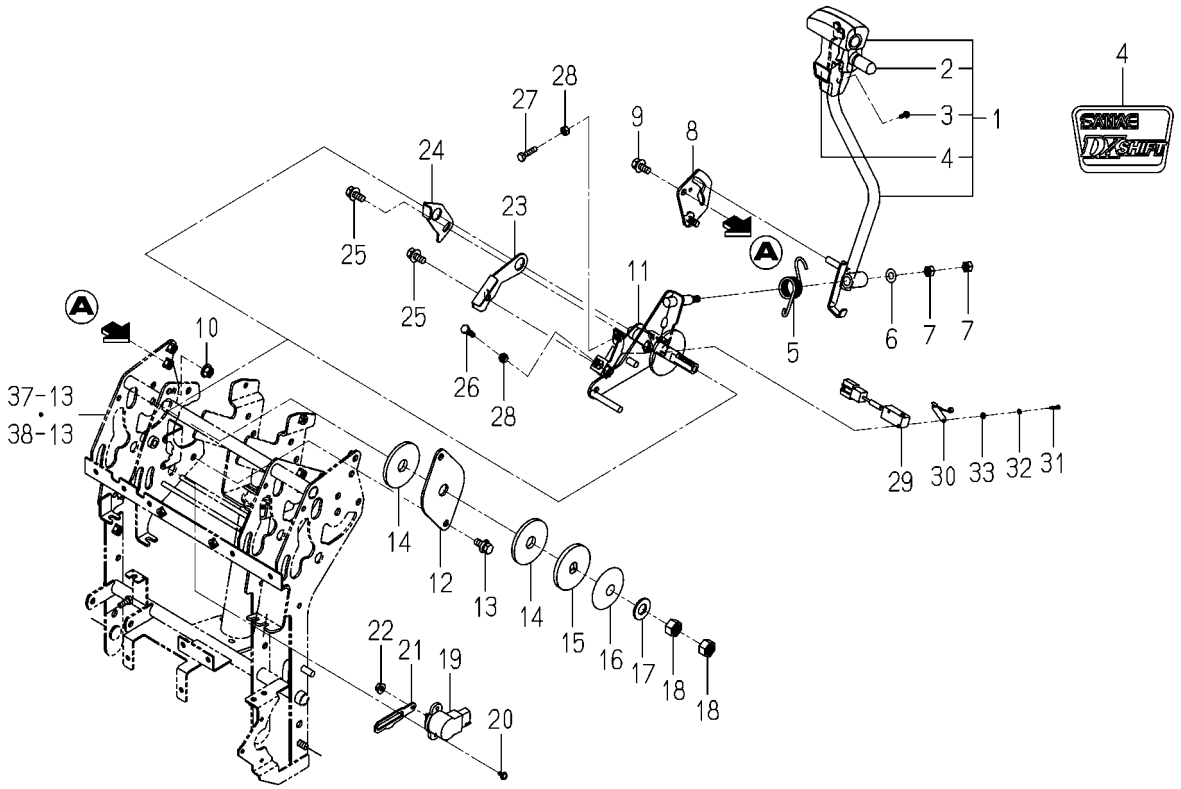


2233-124 -0100

| KEY | PART CODE | DESCRIPTION | SPC | TYPE OF MODEL NP80D | TYPE OF MODEL E16 | ITC | COL | GRP | REMARKS |
|---|---|---|---|---|---|---|---|---|---|
| 1 | 2232-124-200-20 | LEVER/HST/NP SET | * | 1 | | | | | |
| 2 | 2204-124-631-00 | CAP/SWITCH | * | 1 | | | | | |
| 3 | V120-376-001-20 | SCREW,SP/M6X12 | * | 2 | | | | | |
| 4 | 2232-912-023-00 | ORNAMENT/DX/SHIFT | * | 1 | | | | | |
| 5 | 2232-124-003-00 | SPRING/HT025/HST | * | 1 | | | | | |
| 6 | V411-260-008-00 | WASHER,PL/M8 | * | 1 | | | | | |
| 7 | V304-260-008-00 | NUT/M8 | * | 2 | | | | | |
| 8 | 2232-124-240-00 | GUIDE/HST/NP COMP | * | 1 | | | | | |
| 9 | V211-360-802-00 | BOLT,SP/M8X20 | * | 1 | | | | | |
| 10 | V362-260-008-00 | NUT/WASHER/M8 | * | 1 | | | | | |
| 11 | 2233-124-300-00 | CAM/HST/D/NP COMP | * | 1 | | | | | |
| 12 | 2232-124-001-00 | PLATE/FLANGE/HST | * | 1 | | | | | |
| 13 | V211-360-802-00 | BOLT,SP/M8X20 | * | 2 | | | | | |
| 14 | 3864-225-001-00 | LINING/HST | * | 2 | | | | | |
| 15 | 3747-155-013-10 | BRAKE/SLIPPERS/B | * | 1 | | | | | |
| 16 | 3650-212-001-00 | ARM,HST LEVER | * | 1 | | | | | |
| 17 | V411-260-014-00 | WASHER,PL/M14 | * | 1 | | | | | |
| 18 | V304-260-014-00 | NUT/M14 | * | 2 | | | | | |
| 19 | 1729-662-340-00 | SENSOR/ANGLE/110/R | * | 1 | | | | | |
| 20 | V120-364-001-00 | SCREW,SP/M4X10 | * | 2 | | | | | |
| 21 | 2233-124-004-00 | SENSOR ARM/LEVER/HST | * | 1 | | | | | |
| 22 | V360-260-006-00 | NUT/WASHER/M6 | * | 1 | | | | | |
| 23 | 2233-124-005-10 | CAM/HST/FRONT/NP | * | 1 | | | | | |
| 24 | 2204-124-006-00 | CAM/HST/REAR | * | 1 | | | | | |
| 25 | V211-360-802-00 | BOLT,SP/M8X20 | * | 2 | | | | | |
| 26 | V200-260-602-00 | BOLT/M6X20 | * | 1 | | | | | |
| 27 | V200-260-602-50 | BOLT/M6X25 | * | 1 | | | | | |
| 28 | V301-260-006-00 | NUT/M6 | * | 2 | | | | | |
| 29 | 3807-836-350-00 | SWITCH ASSY | * | 1 | | | | | |
| 30 | 3807-836-400-00 | ACTUATOR ASSY | * | 1 | | | | | |

# FIG. 6 LEVER(MAIN)SYSTEM

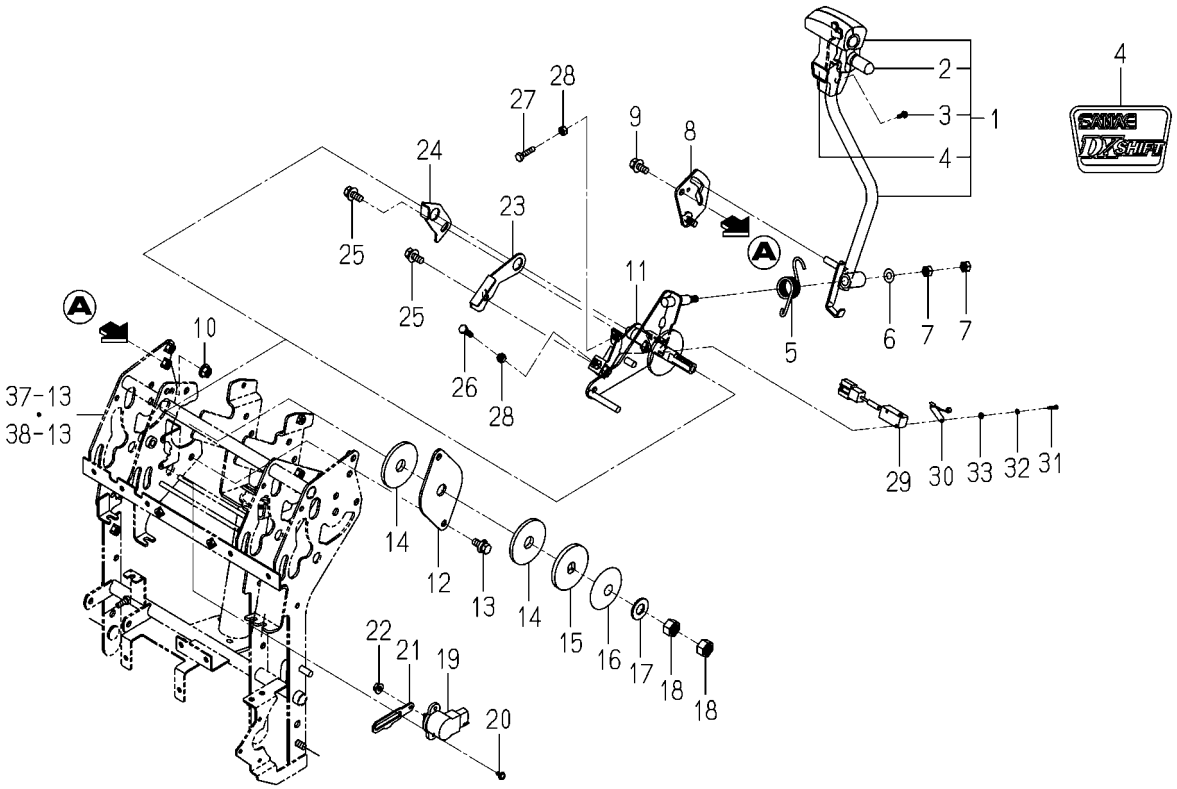


2233-124 -0100

| KEY | PART CODE | DESCRIPTION | SPC | TYPE OF MODEL NP80D E16 | | ITC | COL | GRP | REMARKS |
|---|---|---|---|---|---|---|---|---|---|
| 31 | V111-163-001-60 | SCREW/M3X16 | * | 2 | | | | | |
| 32 | V401-160-003-00 | WASHER,SP/M3 | * | 2 | | | | | |
| 33 | V411-260-003-00 | WASHER,PL/M3 | * | 2 | | | | | |

# FIG. 7 LEVER(SUB)SYSTEM

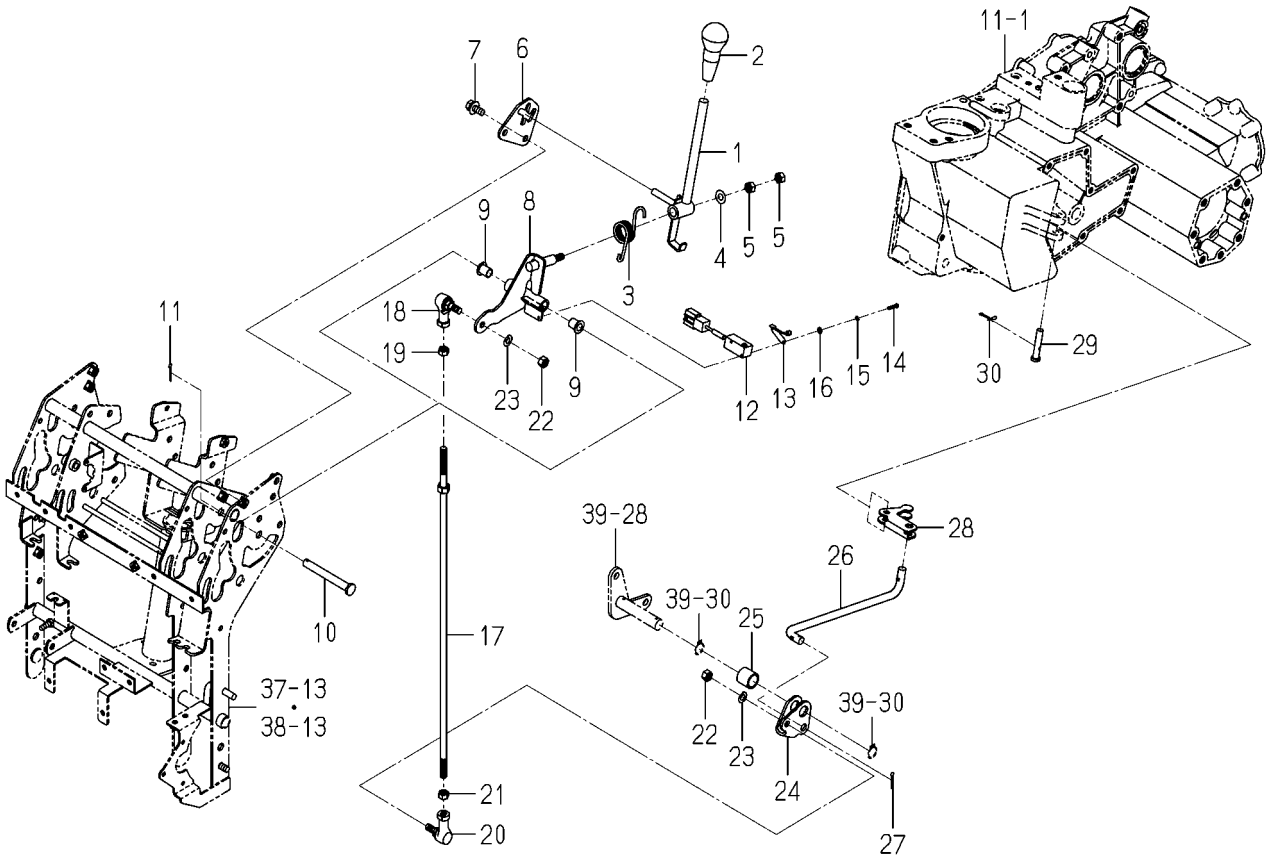


2232-125 -0100

| KEY | PART CODE | DESCRIPTION | SPC | TYPE OF MODEL NP80D E16 | | ITC | COL | GRP | REMARKS |
|---|---|---|---|---|---|---|---|---|---|
| 1 | 2232-125-200-00 | LEVER/CHANGE/NP COMP | * | 1 | | | | | |
| 2 | 3103-210-051-00 | LEVER/GLIP | * | 1 | | | | | |
| 3 | 2232-125-006-00 | SPRING/HT025/CHANGE | * | 1 | | | | | |
| 4 | V411-260-008-00 | WASHER,PL/M8 | * | 1 | | | | | |
| 5 | V304-260-008-00 | NUT/M8 | * | 2 | | | | | |
| 6 | 2232-125-001-00 | GUIDE/CHANGE/NP | * | 1 | | | | | |
| 7 | V211-360-802-00 | BOLT,SP/M8X20 | * | 2 | | | | | |
| 8 | 2232-125-250-00 | CAM/CHANGE/NP COMP | * | 1 | | | | | |
| 9 | 1110-401-002-00 | BUSH/F/10X12X15 | * | 2 | | | | | |
| 10 | 2178-421-003-00 | PIN | * | 1 | | | | | |
| 11 | V500-163-002-00 | PIN,SPLIT/3X20 | * | 1 | | | | | |
| 12 | 3807-836-350-00 | SWITCH ASSY | * | 1 | | | | | |
| 13 | 3807-836-400-00 | ACTUATOR ASSY | * | 1 | | | | | |
| 14 | V111-163-001-60 | SCREW/M3X16 | * | 2 | | | | | |
| 15 | V401-160-003-00 | WASHER,SP/M3 | * | 2 | | | | | |
| 16 | V411-260-003-00 | WASHER,PL/M3 | * | 2 | | | | | |
| 17 | 2232-125-230-00 | ROD/CHANGE/NP COMP | * | 1 | | | | | |
| 18 | 1560-695-021-00 | JOINT BALL M08RH | * | 1 | | | | | |
| 19 | V304-260-008-00 | NUT/M8 | * | 1 | | | | | |
| 20 | 1560-695-022-00 | JOINT BALL M08LH | * | 1 | | | | | |
| 21 | 1560-132-007-30 | NUT/LH/M08 | * | 1 | | | | | |
| 22 | V304-260-008-00 | NUT/M8 | * | 2 | | | | | |
| 23 | V401-160-008-00 | WASHER,SP/M8 | * | 2 | | | | | |
| 24 | 2232-125-007-00 | PLATE/COUNTER/CHANGE | * | 1 | | | | | |
| 25 | 2232-125-009-00 | COLLAR/17X22X20 | * | 1 | | | | | |
| 26 | 2232-125-003-00 | ROD/CHANGE/LOWER/NP | * | 1 | | | | | |
| 27 | V500-163-002-00 | PIN,SPLIT/3X20 | * | 1 | | | | | |
| 28 | 2232-125-005-00 | SHIFTER/CHANGE/NP | * | 1 | | | | | |
| 29 | 2232-125-008-00 | PIN/08X41 | * | 1 | | | | | |
| 30 | 2161-735-006-00 | PIN/STOPPER/8 | * | 1 | | | | | |

# FIG. 8 HST SYSTEM

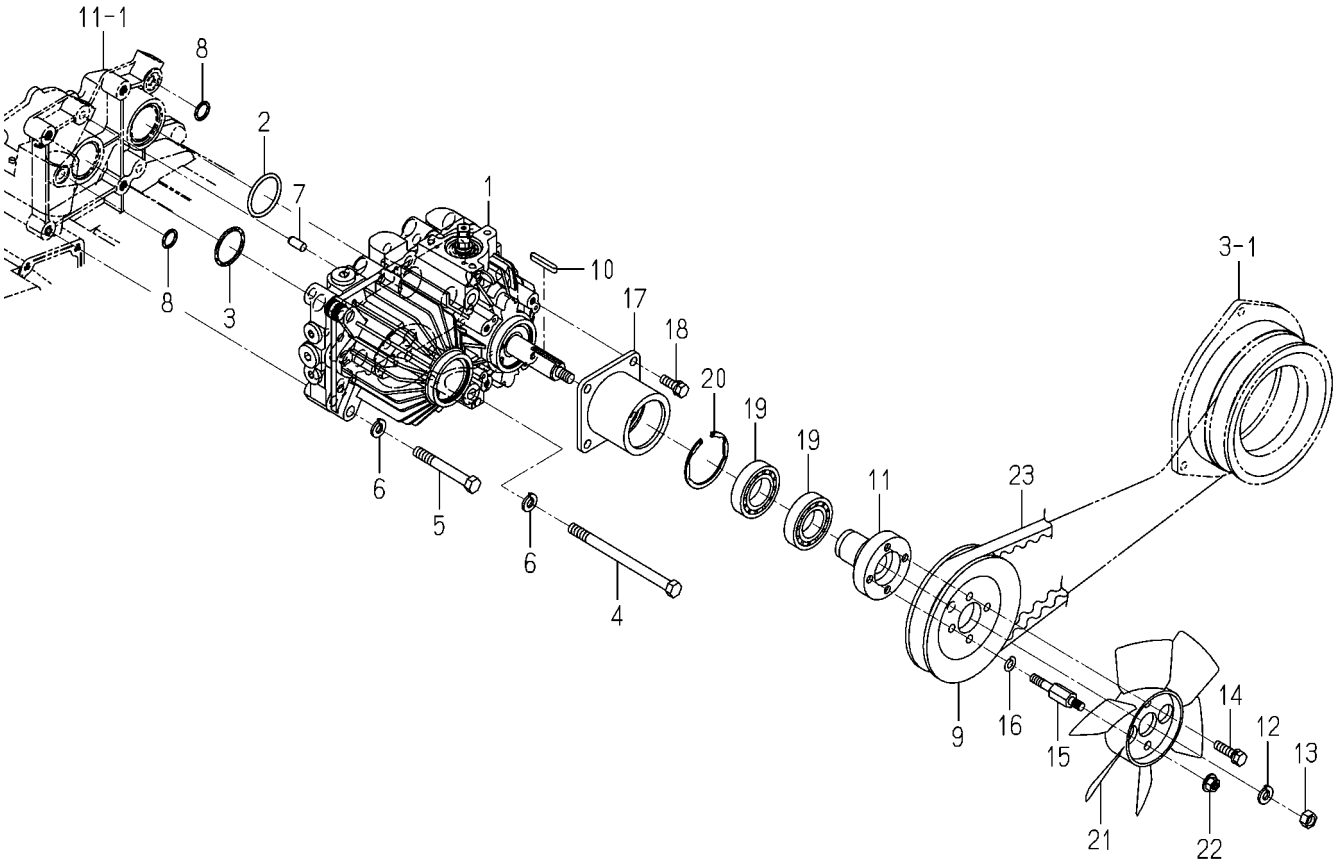


2233-131D-0100

| KEY | PART CODE | DESCRIPTION | SPC | TYPE OF MODEL NP80D | TYPE OF MODEL E16 | ITC | COL | GRP | REMARKS |
|---|---|---|---|---|---|---|---|---|---|
| 1 | K510-022-000-00 | HST/NP/23 ASSY | * | 1 | | | | | FIG 153 |
| 2 | V720-103-503-90 | O-RING/1A,P39 | * | 1 | | | | | |
| 3 | V721-103-103-50 | O-RING/1A,G35 | * | 1 | | | | | |
| 4 | V201-261-014-00 | BOLT/M10X140 | * | 2 | | | | | |
| 5 | V201-261-007-50 | BOLT/M10X75 | * | 2 | | | | | |
| 6 | V401-160-010-00 | WASHER,SP/M10 | * | 4 | | | | | |
| 7 | V522-100-801-80 | PIN,ST,A/8X18 | * | 2 | | | | | |
| 8 | V720-102-401-50 | O-RING/1A,P15 | * | 2 | | | | | |
| 9 | 2233-131-002-00 | PULLEY/VC125 | * | 1 | | | | | |
| 10 | 2178-631-013-00 | KEY/05X05X35 | * | 1 | | | | | |
| 11 | 2233-131-004-00 | HUB/PULLEY | * | 1 | | | | | |
| 12 | V401-160-010-00 | WASHER,SP/M10 | * | 1 | | | | | |
| 13 | V334-260-010-00 | NUT/M10 | * | 1 | | | | | |
| 14 | V211-260-803-00 | BOLT,S/M8X30 | * | 2 | | | | | |
| 15 | 2233-131-007-10 | BOLT/FAN | * | 2 | | | | | |
| 16 | V401-160-008-00 | WASHER,SP/M8 | * | 2 | | | | | |
| 17 | 2233-131-200-00 | METAL/HST COMP | * | 1 | | | | | |
| 18 | V211-260-802-50 | BOLT,S/M8X25 | * | 4 | | | | | |
| 19 | V600-150-600-60 | BEARING,RB/6006SS | * | 2 | | | | | |
| 20 | V707-140-055-00 | RING,SNAP/R55 | * | 1 | | | | | |
| 21 | 1725-210-002-00 | FAN/HST | * | 1 | | | | | |
| 22 | V362-260-008-00 | NUT/WASHER/M8 | * | 2 | | | | | |
| 23 | 2233-131-006-00 | BELT/VC053 | * | 1 | | | | | |

# FIG. 9 LINK(HST)SYSTEM

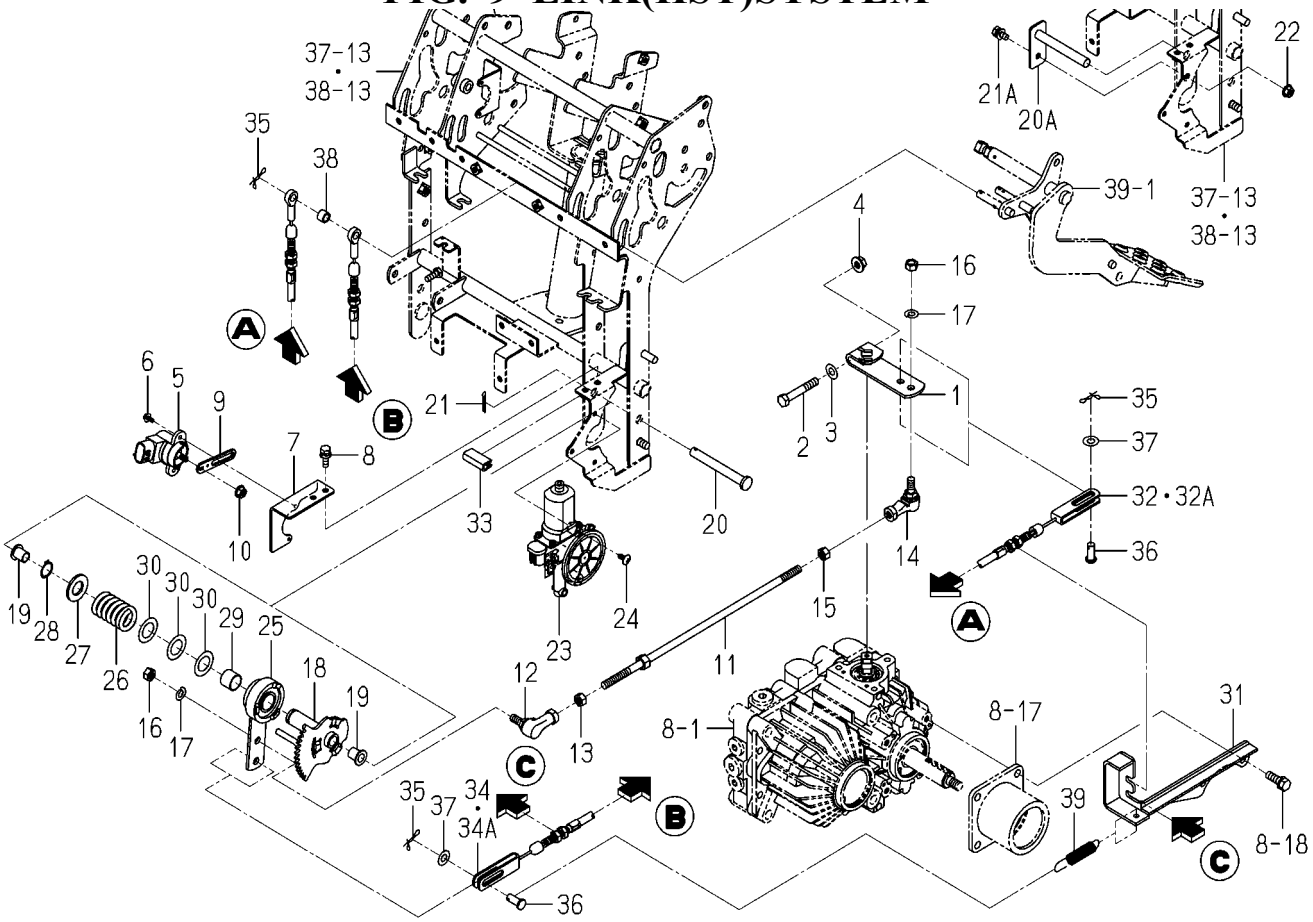


2233-132 -0100

| KEY | PART CODE | DESCRIPTION | SPC | TYPE OF MODEL NP80D | TYPE OF MODEL E16 | ITC | COL | GRP | REMARKS |
|---|---|---|---|---|---|---|---|---|---|
| 1 | 2232-132-008-00 | ARM/TRUNNION/NP | * | 1 | | | | | |
| 2 | V201-260-805-00 | BOLT/M8X50 | * | 1 | | | | | |
| 3 | V411-260-008-00 | WASHER,PL/M8 | * | 1 | | | | | |
| 4 | V362-260-008-00 | NUT/WASHER/M8 | * | 1 | | | | | |
| 5 | 1729-662-330-00 | SENSOR/ANGLE/75 ASSY | * | 1 | | | | | |
| 6 | V120-364-001-00 | SCREW,SP/M4X10 | * | 2 | | | | | |
| 7 | 2232-132-005-10 | PLATE/POTENTIOMETER/ | * | 1 | | | | | |
| 8 | V210-360-602-00 | BOLT,SP/M6X20 | * | 2 | | | | | |
| 9 | 2232-132-004-10 | SENSORARM/HST/NP | * | 1 | | | | | |
| 10 | V360-260-006-00 | NUT/WASHER/M6 | * | 1 | | | | | |
| 11 | 2232-132-220-00 | ROD/HST/NP COMP | * | 1 | | | | | |
| 12 | 1560-695-021-00 | JOINT BALL M08RH | * | 1 | | | | | |
| 13 | V304-260-008-00 | NUT/M8 | * | 1 | | | | | |
| 14 | 1560-695-022-00 | JOINT BALL M08LH | * | 1 | | | | | |
| 15 | 1560-132-007-30 | NUT/LH/M08 | * | 1 | | | | | |
| 16 | V304-260-008-00 | NUT/M8 | * | 2 | | | | | |
| 17 | V401-160-008-00 | WASHER,SP/M8 | * | 2 | | | | | |
| 18 | 2232-132-210-10 | GEAR/HST/NP COMP | * | 1 | | | | | |
| 19 | 1110-401-002-00 | BUSH/F/10X12X15 | * | 2 | | | | | |
| 20 | 2178-421-003-00 | PIN | * | 1 -176 | | | | | |
| 20A | 2232-132-280-00 | PIN/10X79 COMP | * | 1 177- | | | | | |
| 21 | V500-163-002-00 | PIN,SPLIT/3X20 | * | 1 -176 | | | | | |
| 21A | V210-360-601-60 | BOLT,SP/M6X16 | * | 1 177- | | | | | |
| 22 | V360-260-006-00 | NUT/WASHER/M6 | * | 1 177- | | | | | |
| 23 | 2232-711-270-00 | MOTOR/RH ASSY | * | 1 | | | | | |
| 24 | 3888-726-001-00 | TAPPINGSCREW/M5X12 | * | 3 | | | | | |
| 25 | 2232-132-230-20 | CLUTCH/HST/NP COMP | * | 1 | | | | | |
| 26 | 2232-132-001-00 | SPRING/HC042 | * | 1 | | | | | |
| 27 | V411-260-016-00 | WASHER,PL/M16 | * | 1 | | | | | |
| 28 | V704-140-017-00 | RING,SNAP/17 C | * | 1 | | | | | |

# FIG. 9 LINK(HST)SYSTEM

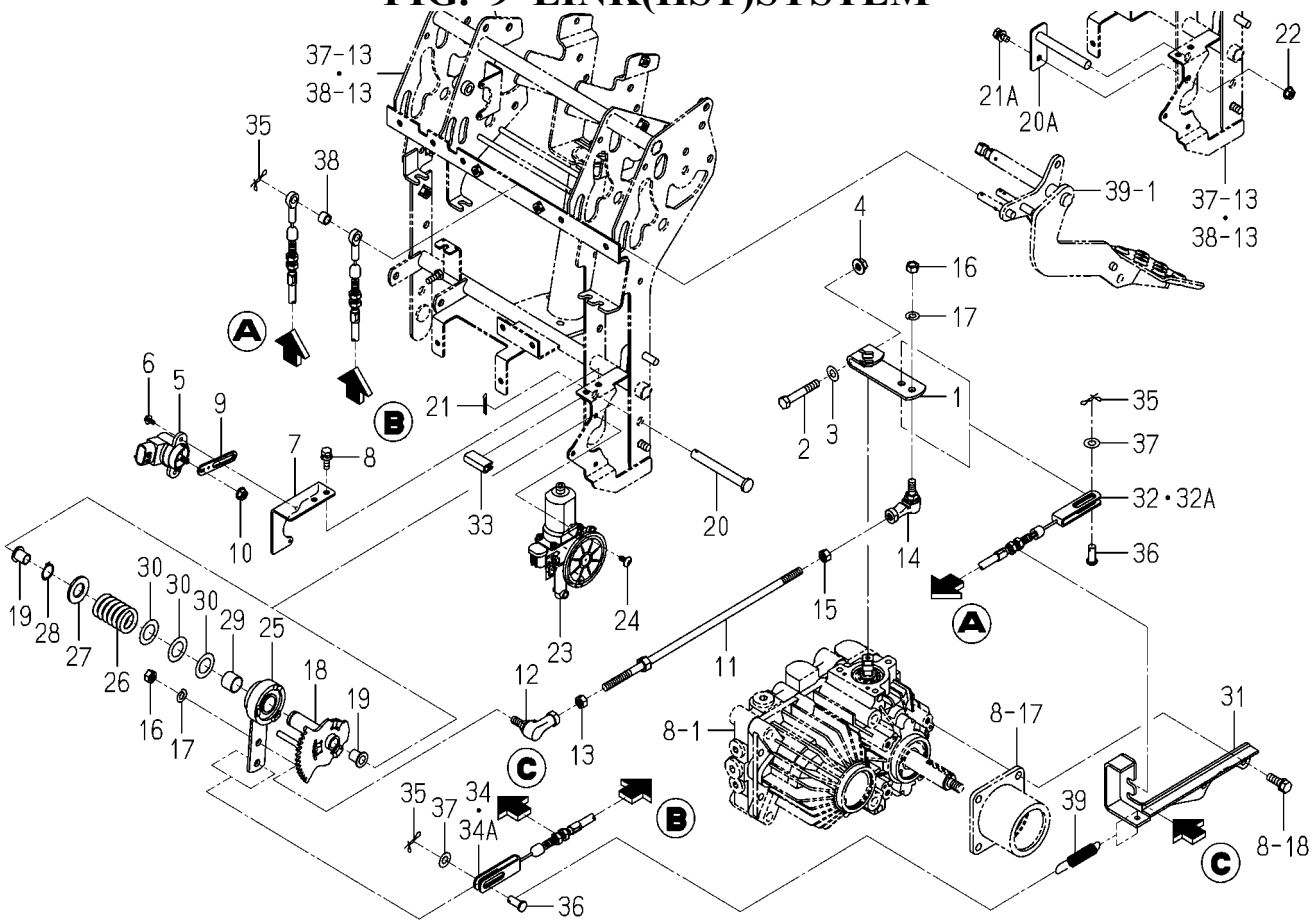


2233-132 -0100

| KEY | PART CODE | DESCRIPTION | SPC | TYPE OF MODEL NP80D | TYPE OF MODEL E16 | ITC | COL | GRP | REMARKS |
|---|---|---|---|---|---|---|---|---|---|
| 29 | 2213-701-023-00 | BUSH/17X19X15 | * | 1 | | | | | |
| 30 | 3511-203-005-00 | SHIM,NEEDLE SHAFT | * | 3 | | | | | |
| 31 | 2232-132-240-20 | PLATE/ADJUSTER/HST | * | 1 | | | | | |
| 32 | 2233-132-006-30 | CABLE/HST/FORWARD/8 | * | 1 -80 | | | | | |
| 32A | 2233-132-006-40 | CABLE/HST/FORWARD/8 | * | 1 81- | | 1 | | | |
| 33 | 2186-414-002-00 | PROTECTOR | * | 1 186- | | | | | |
| 34 | 2233-132-007-30 | CABLE/HST/REVERSE/8 | * | 1 -80 | | | | | |
| 34A | 2233-132-007-40 | CABLE/HST/REVERSE/8 | * | 1 81- | | 1 | | | |
| 35 | 2161-735-006-00 | PIN/STOPPER/8 | * | 3 | | | | | |
| 36 | 3560-203-002-00 | PIN,TRIP-HOOK ROD | * | 2 | | | | | |
| 37 | V411-260-008-00 | WASHER,PL/M8 | * | 2 | | | | | |
| 38 | 2232-132-009-00 | COLLAR/09X12X09 | * | 1 | | | | | |
| 39 | 2161-615-014-00 | SPRING,HE071 | * | 1 | | | | | |

# FIG. 10 PEDAL(ACCELERATOR)SYSTEM

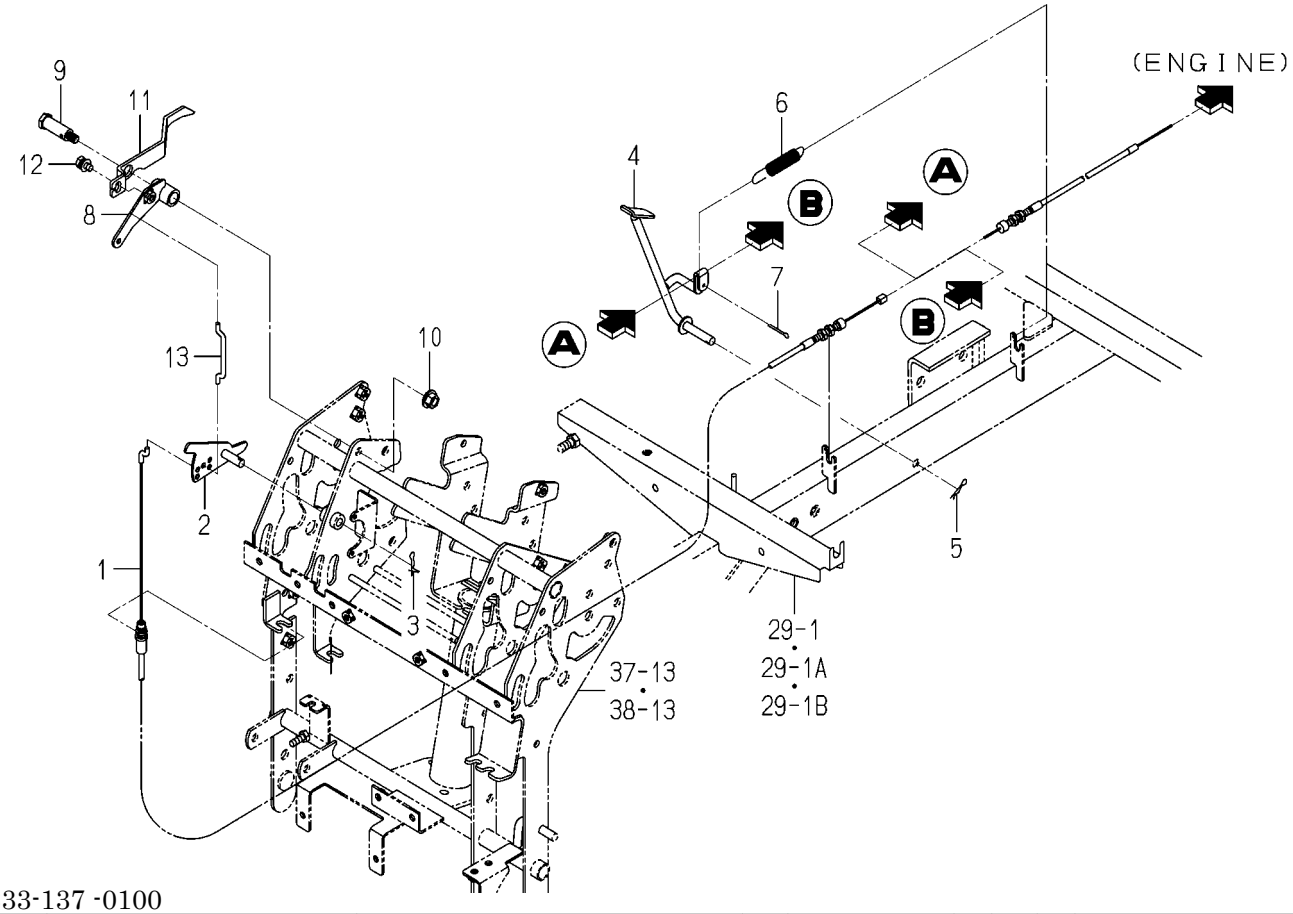


2233-137 -0100

| KEY | PART CODE | DESCRIPTION | SPC | TYPE OF MODEL NP80D E16 | | ITC | COL | GRP | REMARKS |
|---|---|---|---|---|---|---|---|---|---|
| 1 | 2233-137-001-00 | CABLE/ACCELERATOR/D/ | * | 1 | | | | | |
| 2 | 2233-137-220-00 | ARM/AUTO ACCELERATOR | * | 1 | | | | | |
| 3 | 2161-735-006-00 | PIN/STOPPER/8 | * | 1 | | | | | |
| 4 | 2233-137-200-10 | PEDAL/ACCELERATOR/D/ | * | 1 | | | | | |
| 5 | 3908-170-020-00 | PIN/SNAP/08 | * | 1 | | | | | |
| 6 | 2161-615-014-00 | SPRING,HE071 | * | 1 | | | | | |
| 7 | V500-163-002-00 | PIN,SPLIT/3X20 | * | 1 | | | | | |
| 8 | 2233-137-230-20 | ARM/ACCELERATOR/BACK | * | 1 | | | | | |
| 9 | 2213-137-004-00 | PIN/12X31 | * | 1 | | | | | |
| 10 | V362-260-008-00 | NUT/WASHER/M8 | * | 1 | | | | | |
| 11 | 2233-137-011-00 | ARM/ACCELERATOR/BACK | * | 1 | | | | | |
| 12 | V210-360-601-60 | BOLT,SP/M6X16 | * | 1 | | | | | |
| 13 | 2233-137-009-00 | ROD/ACCELERATOR/NP | * | 1 | | | | | |

# FIG. 11 CASE(TRANSMISSION)SYSTEM

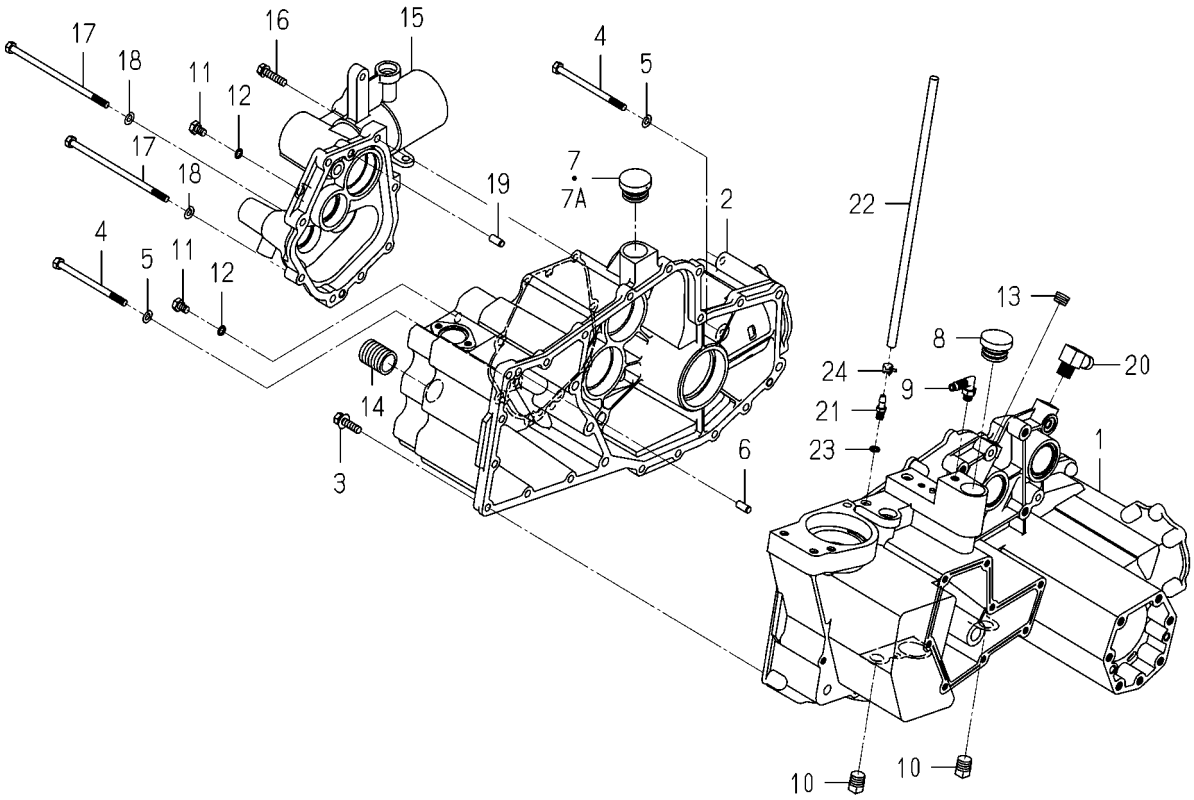


2233-201 -0100

| KEY | PART CODE | DESCRIPTION | SPC | TYPE OF MODEL NP80D | E16 | ITC | COL | GRP | REMARKS |
|---|---|---|---|---|---|---|---|---|---|
| 1 | 2232-201-001-50 | CASE/TRANSMISSION/LH | * | 1 | | | | | |
| 2 | 2232-201-002-20 | CASE/TRANSMISSION/RH | * | 1 | | | | | |
| 3 | V211-560-803-00 | BOLT,S/M8X30/7T | * | 17 | | | | | |
| 4 | 2232-201-004-00 | BOLT/M8X110 | * | 3 | | | | | |
| 5 | V401-160-008-00 | WASHER,SP/M8 | * | 3 | | | | | |
| 6 | V522-100-801-80 | PIN,ST,A/8X18 | * | 2 | | | | | |
| 7 | 7954-205-101-00 | CAP,OIL/30 | * | 1 -175 | | | | | |
| 7A | 7954-205-100-00 | CAP,OIL/30 | * | 1 176- | | | | | |
| 8 | 2161-201-001-00 | RING/O | * | 1 | | | | | |
| 9 | 2194-410-006-00 | CONNECTOR | * | 1 | | | | | |
| 10 | V781-160-000-6B | PLUG/SCREW/SEAL | * | 2 | | | | | |
| 11 | 2188-201-007-00 | BOLT/M8X12 | * | 2 | | | | | |
| 12 | V720-101-900-80 | O-RING/1A,P8 | * | 2 | | | | | |
| 13 | V780-140-000-6B | PLUG/SCREW/SEAL | * | 1 | | | | | |
| 14 | 2232-201-006-00 | ADAPTERFILTER | * | 1 | | | | | |
| 15 | 2232-201-003-10 | COVER/PLANTINGCLUTCH | * | 1 | | | | | |
| 16 | V211-560-803-50 | BOLT,S/M8X35/7T | * | 6 | | | | | |
| 17 | 2232-201-005-00 | BOLT/M8X160 | * | 2 | | | | | |
| 18 | V401-160-008-00 | WASHER,SP/M8 | * | 2 | | | | | |
| 19 | V522-100-801-80 | PIN,ST,A/8X18 | * | 2 | | | | | |
| 20 | 3676-352-002-00 | ADAPTOR/3X8 | * | 1 | | | | | |
| 21 | 2232-201-007-10 | CONNECTOR/MINIHALF | * | 1 | | | | | |
| 22 | 2232-201-008-10 | HOSE/650 | * | 1 | | | | | |
| 23 | V720-101-900-80 | O-RING/1A,P8 | * | 1 | | | | | |
| 24 | J062-104-111-00 | CLIP/HOSE/10.4-11.1 | * | 1 | | | | | |

# FIG. 12 SHAFT(INPUT)SYSTEM

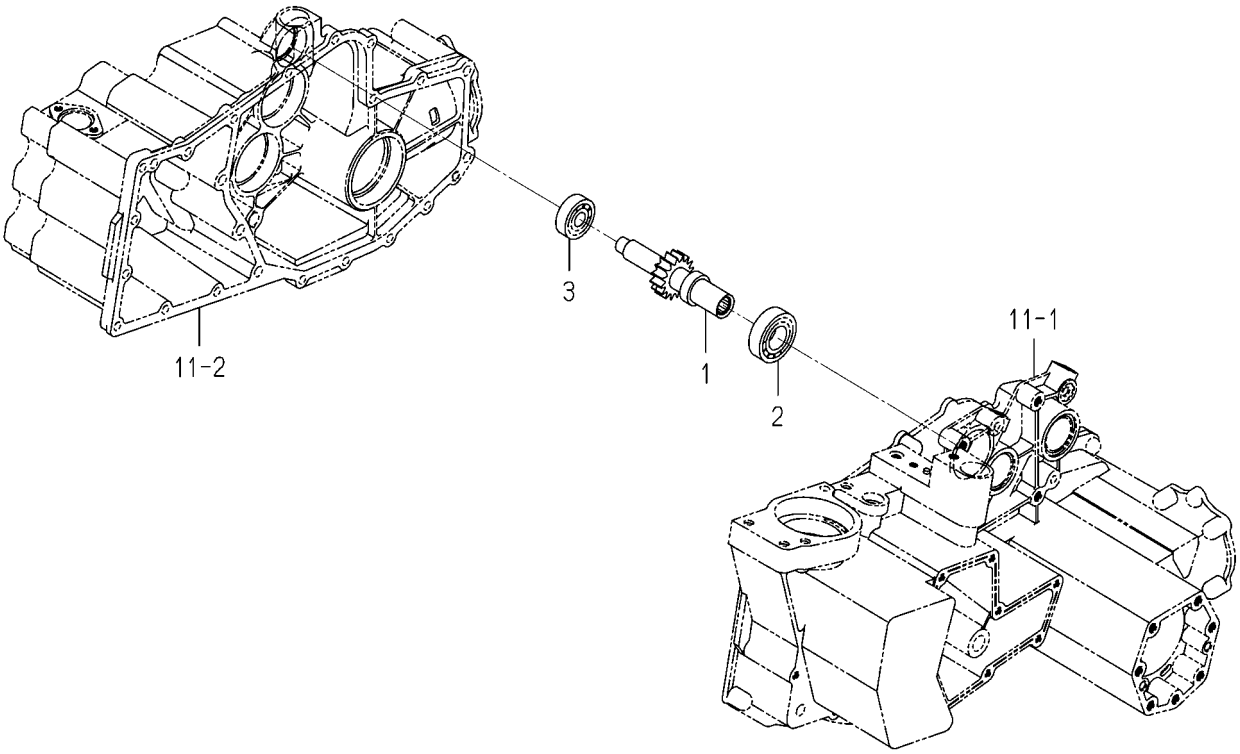


2233-202 -0100

| KEY | PART CODE | DESCRIPTION | SPC | TYPE OF MODEL NP80D E16 | | ITC | COL | GRP | REMARKS |
|---|---|---|---|---|---|---|---|---|---|
| 1 | 2233-202-200-00 | SHAFT/INPUT/8D COMP | * | 1 | | | | | |
| 2 | V600-110-620-50 | BEARING,RB/6205 | * | 1 | | | | | |
| 3 | V600-110-630-20 | BEARING,RB/6302 | * | 1 | | | | | |

# FIG. 13 SHAFT(COUNTER)SYSTEM

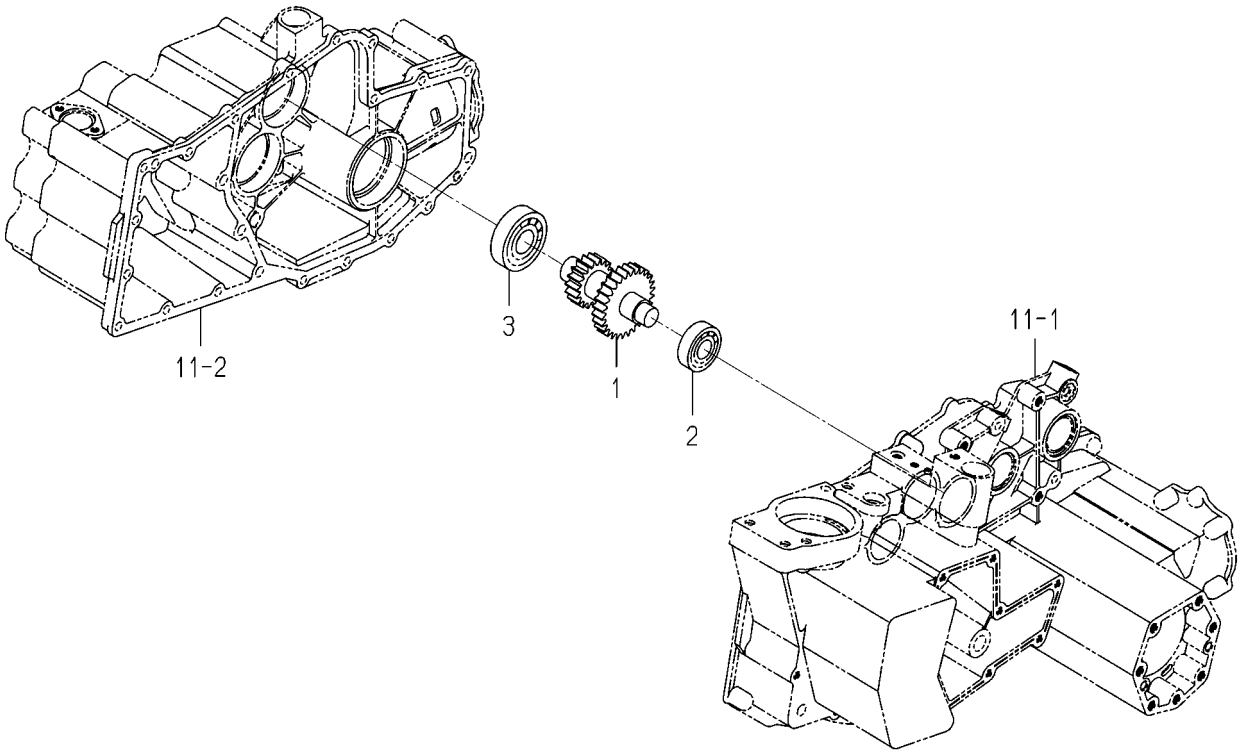


2233-203 -0100

| KEY | PART CODE | DESCRIPTION | SPC | TYPE OF MODEL NP80D E16 | | ITC | COL | GRP | REMARKS |
|---|---|---|---|---|---|---|---|---|---|
| 1 | 2233-203-200-00 | SHAFT/COUNTER/8 COMP | * | 1 | | | | | |
| 2 | V600-110-620-40 | BEARING,RB/6204 | * | 1 | | | | | |
| 3 | V600-110-630-50 | BEARING,RB/6305 | * | 1 | | | | | |

# FIG. 14 SHAFT(CHANGE)SYSTEM

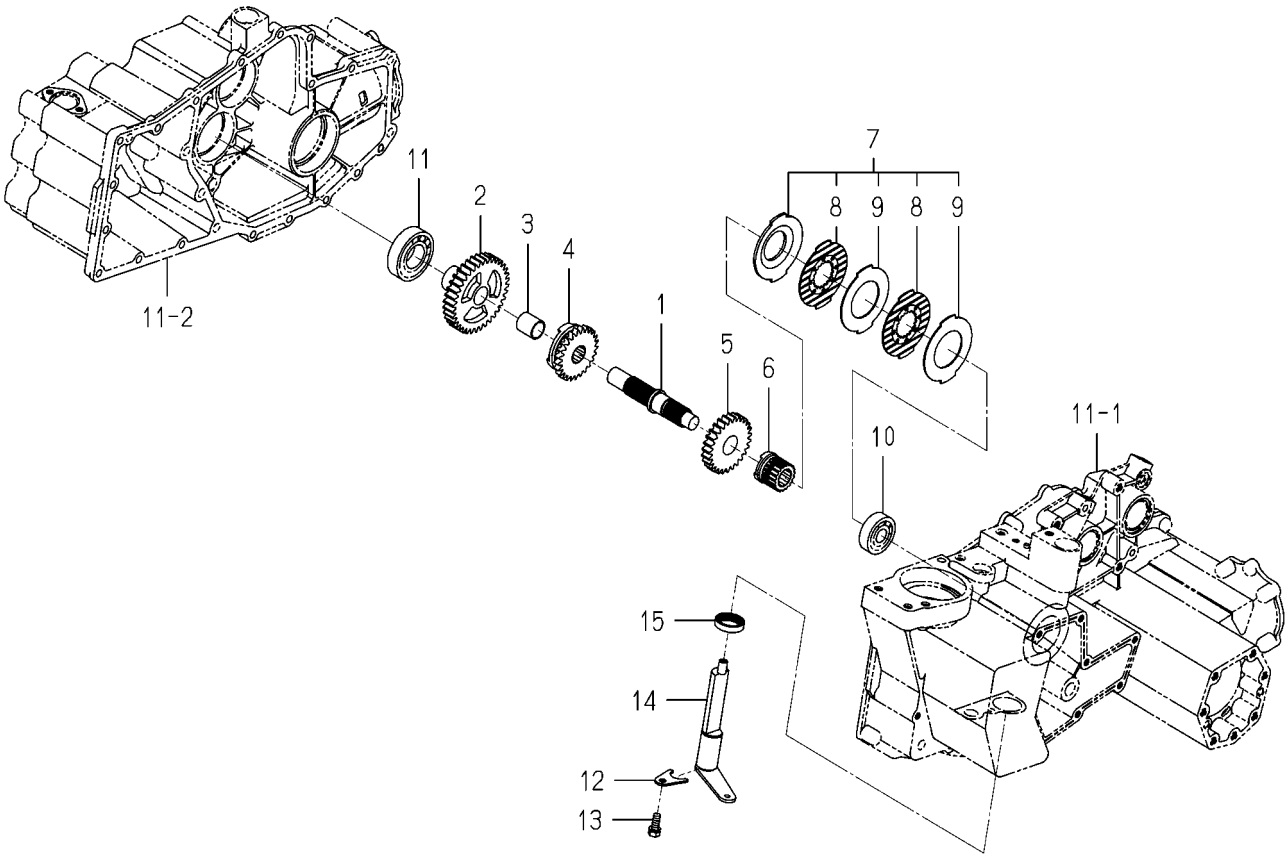


2233-204 -0100

| KEY | PART CODE | DESCRIPTION | SPC | TYPE OF MODEL NP80D E16 | | ITC | COL | GRP | REMARKS |
|---|---|---|---|---|---|---|---|---|---|
| 1 | 2232-204-001-20 | SHAFT/CHANGE | * | 1 | | | | | |
| 2 | 2232-204-002-30 | GEAR/SPUR/36 | * | 1 | | | | | |
| 3 | 8664-305-201-00 | BUSH/20X23X25 | * | 1 | | | | | |
| 4 | 2233-204-001-00 | GEAR/SPUR/27 | * | 1 | | | | | |
| 5 | 2232-204-005-00 | GEAR/SPUR/26 | * | 1 | | | | | |
| 6 | 2232-204-006-00 | HAB/BRAKE | * | 1 | | | | | |
| 7 | 2213-204-200-00 | BRAKE/8 ASSY | * | 1 | | | | | |
| 8 | 3801-109-222-00 | PLATE,DISC | * | 2 | | | | | |
| 9 | 3801-109-223-00 | PLATE,SEPARATER | * | 2 | | | | | |
| 10 | V600-110-630-30 | BEARING,RB/6303 | * | 1 | | | | | |
| 11 | V600-110-620-60 | BEARING,RB/6206 | * | 1 | | | | | |
| 12 | 2232-204-008-00 | PLATE/FOUR BRAKE HOL | * | 1 | | | | | |
| 13 | 2144-701-021-10 | BOLT/SEAL/M8X16/S | * | 1 | | | | | |
| 14 | 2232-204-210-00 | SHAFT/FOUR WHEEL BRA | * | 1 | | | | | |
| 15 | V744-125-350-70 | SEAL,OIL/TC25357 | * | 1 | | | | | |

# FIG. 15 SHAFT(REAR),CLUTCH&BRAKE SYSTEM

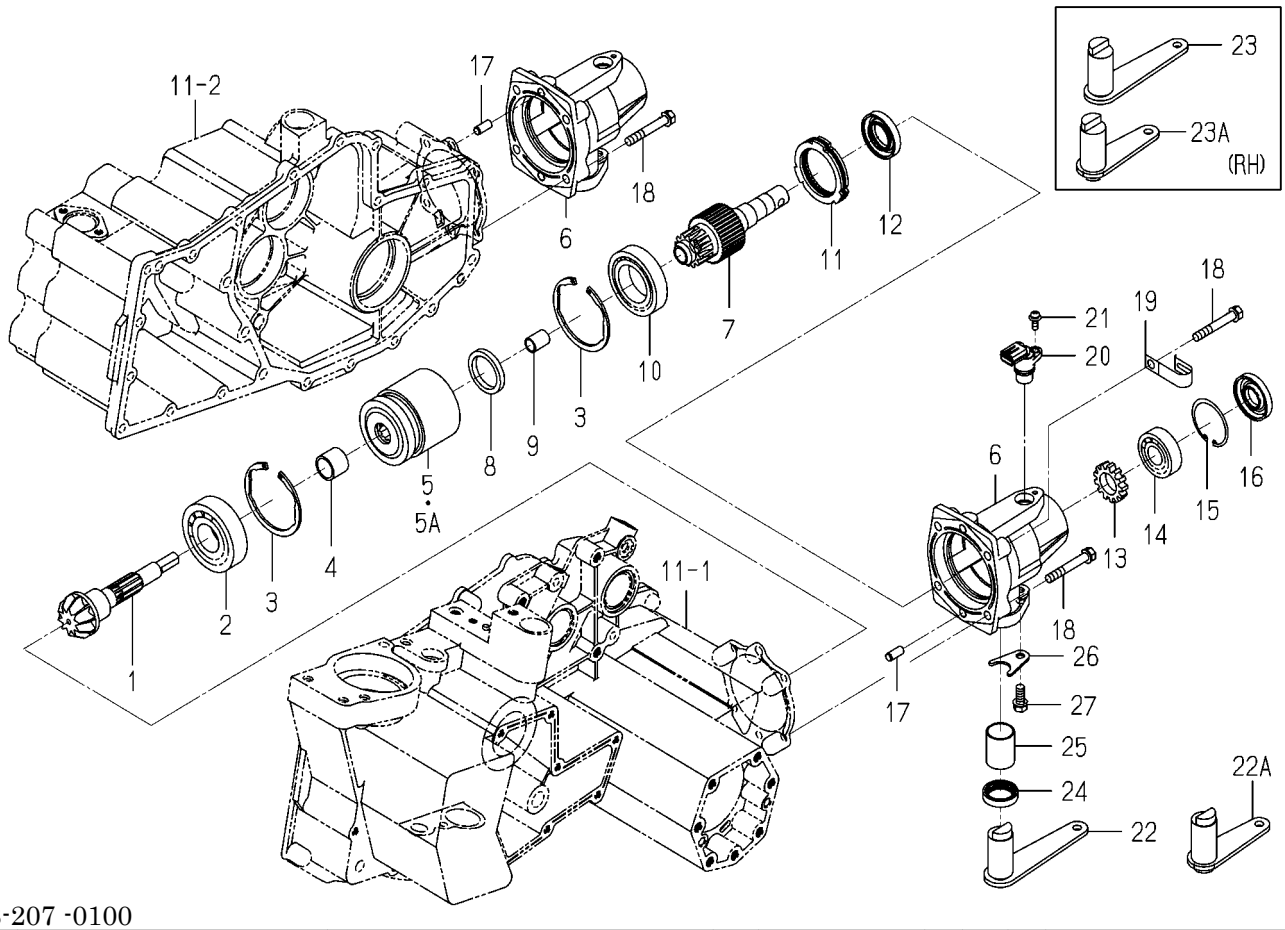


2233-207 -0100

| KEY | PART CODE | DESCRIPTION | SPC | TYPE OF MODEL NP80D E16 | | ITC | COL | GRP | REMARKS |
|---|---|---|---|---|---|---|---|---|---|
| 1 | 2232-207-001-00 | GEAR/BEVEL/10 | * | 2 | | | | | |
| 2 | V600-110-630-60 | BEARING,RB/6306 | * | 2 | | | | | |
| 3 | V707-140-072-00 | RING,SNAP/R72 | * | 4 | | | | | |
| 4 | 2232-207-004-00 | COLLAR/20X25X21 | * | 2 | | | | | |
| 5 | 2233-207-250-20 | CLUTCH/NP8 ASSY | * | 2 -80 | | | | | FIG 156 |
| 5A | 2233-207-250-30 | CLUTCH/NP8 ASSY | * | 2 81- | | 1 | | | FIG 156 |
| 6 | 2233-207-001-00 | COVER/BRAKE/NP | * | 2 | | | | | |
| 7 | 2233-207-002-00 | SHAFT/REARCLUTCH/8 | * | 2 | | | | | |
| 8 | 2233-207-006-10 | COLLAR/35X45X6 | * | 2 | | | | | |
| 9 | 2232-556-023-10 | BUSH/12X15X20 | * | 2 | | | | | |
| 10 | V600-110-620-70 | BEARING,RB/6207 | * | 2 | | | | | |
| 11 | 2233-207-300-10 | BRAKE/NP/D ASSY | * | 2 | | | | | |
| 12 | V744-125-470-80 | SEAL,OIL/TC25478 | * | 2 | | | | | |
| 13 | 2204-207-012-30 | GEAR/TURN | * | 2 | | | | | |
| 14 | V600-110-620-40 | BEARING,RB/6204 | * | 2 | | | | | |
| 15 | V705-140-047-00 | RING,SNAP/47 C | * | 2 | | | | | |
| 16 | V744-120-470-70 | SEAL,OIL/TC20477 | * | 2 | | | | | |
| 17 | V522-100-801-80 | PIN,ST,A/8X18 | * | 4 | | | | | |
| 18 | V211-260-805-50 | BOLT,S/M8X55 | * | 8 | | | | | |
| 19 | 1425-621-004-00 | HOLDER/JE/9-9 | * | 1 | | | | | |
| 20 | 3888-281-200-00 | SENSOR/SPEED/GEAR | * | 2 | | | | | |
| 21 | V120-265-001-60 | SCREW,SEMS/M5X16 | * | 2 | | | | | |
| 22 | 2233-207-210-10 | ARM/BRAKE/LH COMP | * | 1 -80 | | | | | |
| 22A | 2233-207-210-20 | ARM/BRAKE/LH COMP | * | 1 81- | | 3 | | | |
| 23 | 2233-207-220-10 | ARM/BRAKE/RH COMP | * | 1 -80 | | | | | |
| 23A | 2233-207-220-20 | ARM/BRAKE/RH COMP | * | 1 81- | | 3 | | | |
| 24 | V744-125-350-70 | SEAL,OIL/TC25357 | * | 2 | | | | | |
| 25 | 2233-207-003-00 | BUSH/25X28X35 | * | 2 | | | | | |
| 26 | 2232-204-008-00 | PLATE/FOUR BRAKE HOL | * | 2 | | | | | |
| 27 | 2144-701-021-10 | BOLT/SEAL/M8X16/S | * | 2 | | | | | |

# FIG. 16 SHAFT(DRIVE/FRONT)SYSTEM

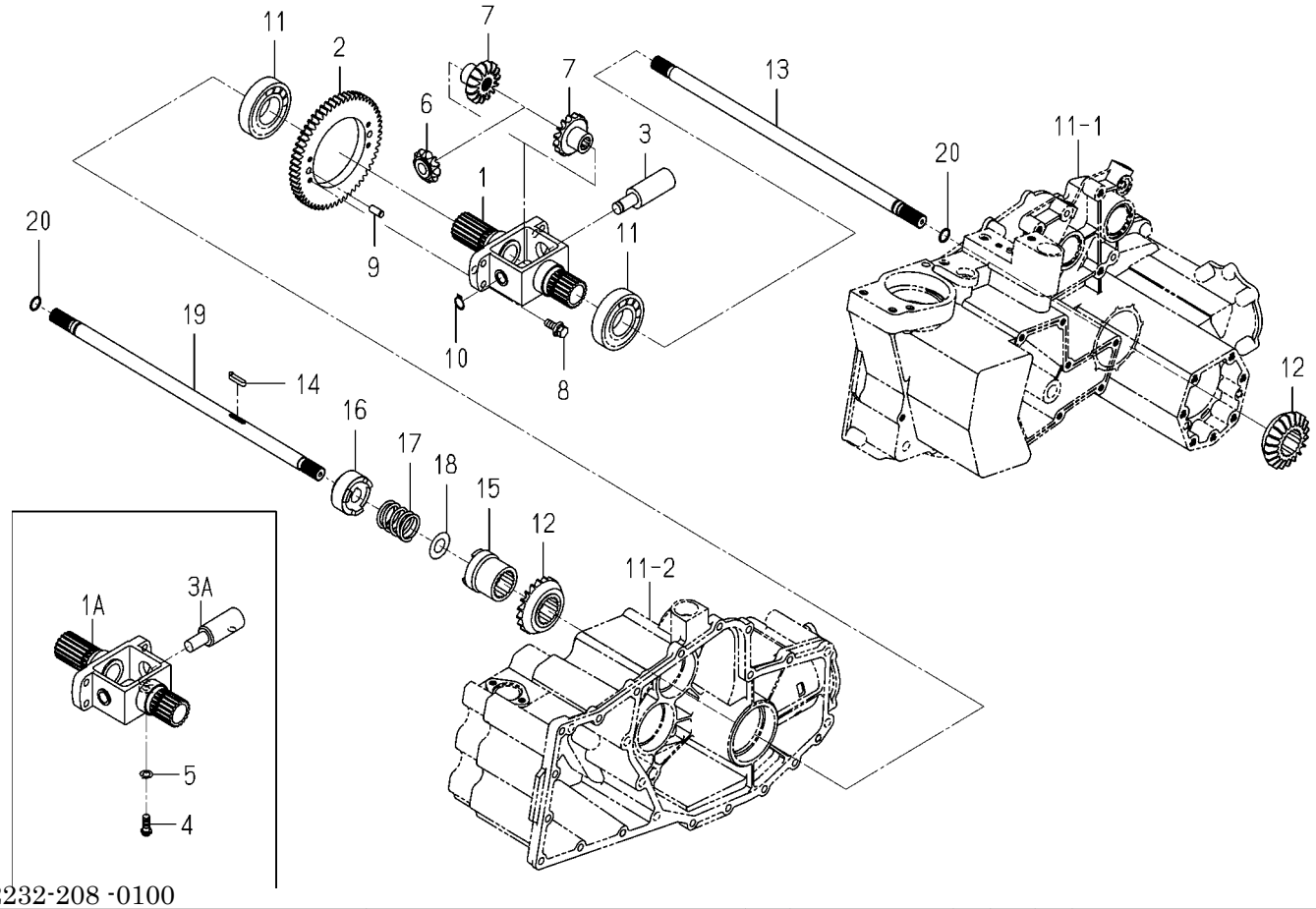


2232-208 -0100

| KEY | PART CODE | DESCRIPTION | SPC | TYPE OF MODEL NP80D E16 | | ITC | COL | GRP | REMARKS |
|---|---|---|---|---|---|---|---|---|---|
| 1 | 2232-208-001-20 | FRONT/DIFFCASE | * | 1 -80 | | | | | |
| 1A | 2232-208-001-40 | FRONT/DIFFCASE | * | 1 81- | | 1 | | | |
| 2 | 2232-208-009-10 | GEAR/SUPER/58 | * | 1 | | | | | |
| 3 | 2232-208-011-10 | SHAFT/DIFF | * | 1 -80 | | 1 | | | |
| 3A | 2232-208-011-30 | SHAFT/DIFF | * | 1 81- | | 1 | | | |
| 4 | 2232-208-014-00 | BOLT/SHAFT/DIFF | * | 1 81- | | | | | |
| 5 | V401-160-008-00 | WASHER,SP/M8 | * | 1 81- | | | | | |
| 6 | 2204-208-007-20 | GEAR/BEVEL/11 | * | 1 | | | | | |
| 7 | 2204-208-002-10 | GEAR/BEVEL/15 | * | 2 | | | | | |
| 8 | V211-560-802-50 | BOLT,S/M8X25/7T | * | 4 | | | | | |
| 9 | V522-100-801-80 | PIN,ST,A/8X18 | * | 2 | | | | | |
| 10 | V704-140-014-00 | RING,SNAP/14 C | * | 1 -80 | | | | | |
| 11 | V600-110-620-70 | BEARING,RB/6207 | * | 2 | | | | | |
| 12 | 2232-208-006-00 | GEAR/BEVEL/20 | * | 2 | | | | | |
| 13 | 2232-208-007-00 | SHAFT/FRONTDRIVE/LH | * | 1 | | | | | |
| 14 | 2204-208-018-00 | KEY/05X05X26 | * | 1 | | | | | |
| 15 | 2232-208-005-10 | HUB/DIFF/DRIVE | * | 1 | | | | | |
| 16 | 2232-208-003-00 | CLUTCH/DIFFLOCK | * | 1 | | | | | |
| 17 | 2232-208-002-00 | SPRING/HC041 | * | 1 | | | | | |
| 18 | 2232-208-004-00 | WASHER/18X34X02 | * | 1 | | | | | |
| 19 | 2232-208-008-00 | SHAFT/FRONTDRIVE/RH | * | 1 | | | | | |
| 20 | V723-101-501-50 | O-RING/1A,S15 | * | 2 | | | | | |

# FIG. 17 SHAFT(DRIVE/PLANTING)SYSTEM

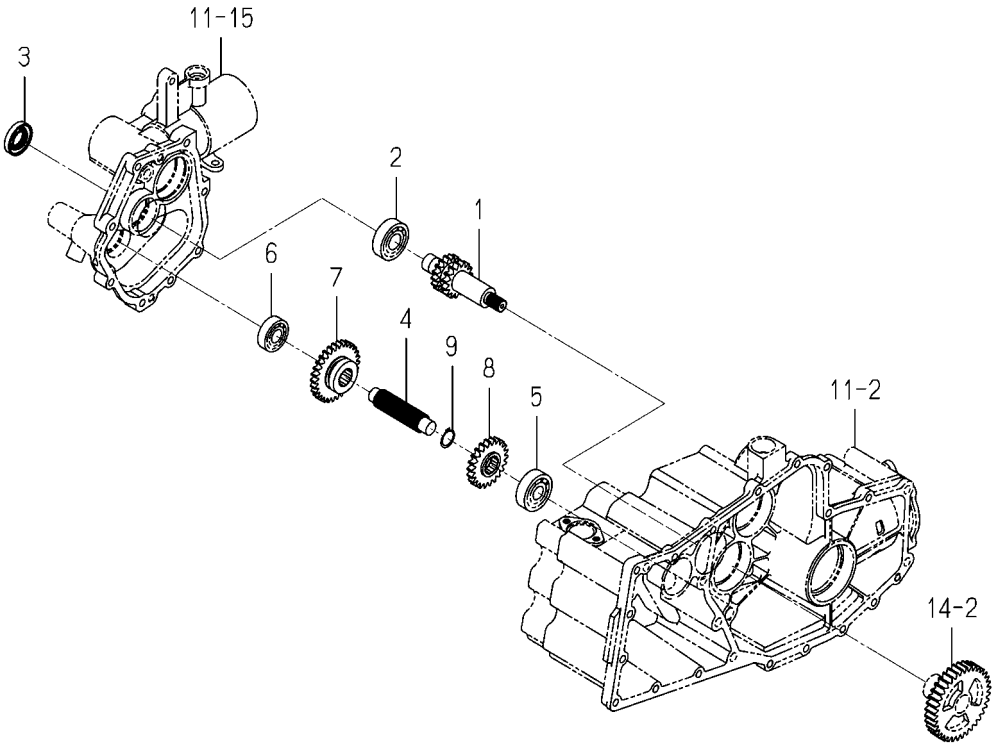


2233-209 -0100

| KEY | PART CODE | DESCRIPTION | SPC | TYPE OF MODEL NP80D E16 | | ITC | COL | GRP | REMARKS |
|---|---|---|---|---|---|---|---|---|---|
| 1 | 2232-209-007-00 | GEAR/SPUR/15-17 | * | 1 | | | | | |
| 2 | V600-110-620-40 | BEARING,RB/6204 | * | 1 | | | | | |
| 3 | V744-120-400-70 | SEAL,OIL/TC20407 | * | 1 | | | | | |
| 4 | 2232-209-001-10 | SHAFT/CHANGE/SUB | * | 1 | | | | | |
| 5 | V600-110-630-30 | BEARING,RB/6303 | * | 1 | | | | | |
| 6 | V600-110-620-30 | BEARING,RB/6203 | * | 1 | | | | | |
| 7 | 2232-209-005-00 | GEAR/SPUR/30 | * | 1 | | | | | |
| 8 | 2233-209-001-00 | GEAR/SPUR/22 | * | 1 | | | | | |
| 9 | V704-140-022-00 | RING,SNAP/22 C | * | 1 | | | | | |

# FIG. 18 SHAFT(PLANTING INTERVAL, PLANTING/OUTPUT)SYSTEM

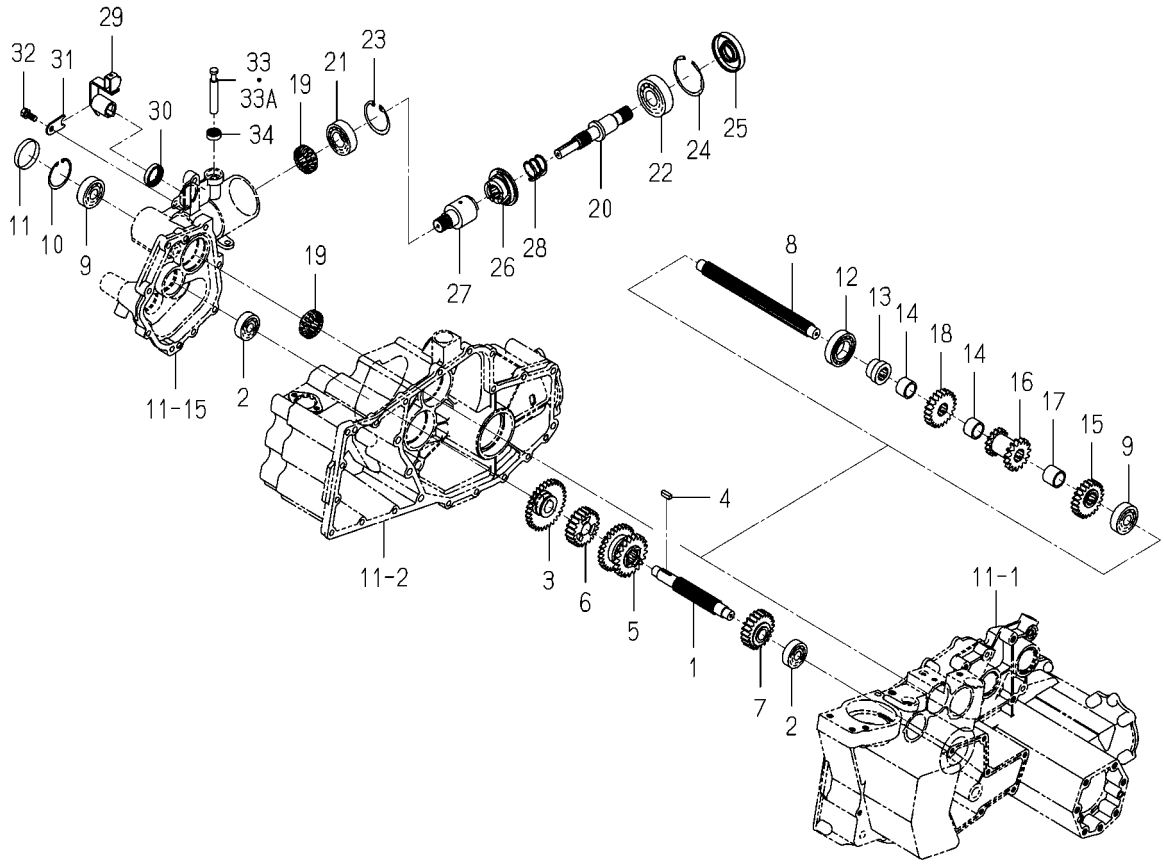


2233-211 -0100

| KEY | PART CODE | DESCRIPTION | SPC | TYPE OF MODEL NP80D E16 | | ITC | COL | GRP | REMARKS |
|---|---|---|---|---|---|---|---|---|---|
| 1 | 2232-211-001-20 | SHAFT/CHANGE | * | 1 | | | | | |
| 2 | V600-110-630-20 | BEARING,RB/6302 | * | 2 | | | | | |
| 3 | 2233-211-200-20 | GEAR/SPUR/31 COMP | * | 1 | | | | | |
| 4 | 2232-211-038-00 | KEY/06X06X18 | * | 1 | | | | | |
| 5 | 2232-211-003-00 | GEAR/SPUR/21-28 | * | 1 | | | | | |
| 6 | 2232-211-004-00 | GEAR/SPARSE PLANTING | * | 1 | | | | | |
| 7 | 2232-211-005-00 | GEAR/SPARSE PLANTING | * | 1 | | | | | |
| 8 | 2232-211-006-20 | SHAFT/DRIVEN | * | 1 | | | | | |
| 9 | V600-110-630-30 | BEARING,RB/6303 | * | 2 | | | | | |
| 10 | V705-140-047-00 | RING,SNAP/47 C | * | 1 | | | | | |
| 11 | 2194-701-010-00 | PLUG/47 | * | 1 | | | | | |
| 12 | V600-110-600-60 | BEARING,RB/6006 | * | 1 | | | | | |
| 13 | 2232-211-035-00 | HUB/PLANTING/DRIVEN | * | 1 | | | | | |
| 14 | 2232-211-033-10 | COLOR/21X27X18 | * | 2 | | | | | |
| 15 | 2232-211-018-00 | GEAR/SPARSE PLANTING | * | 1 | | | | | |
| 16 | 2232-211-007-00 | GEAR/SPUR/15-15 | * | 1 | | | | | |
| 17 | 2232-211-034-00 | COLOR/21X27X23 | * | 1 | | | | | |
| 18 | 2232-211-017-00 | GEAR/SPARSE PLANTING | * | 1 | | | | | |
| 19 | 2232-211-024-00 | GEAR/BEVEL/15/NP | * | 2 | | | | | |
| 20 | 2232-211-015-10 | SHAFT/PLANT/OUT | * | 1 | | | | | |
| 21 | V600-110-620-50 | BEARING,RB/6205 | * | 1 | | | | | |
| 22 | V600-110-630-50 | BEARING,RB/6305 | * | 1 | | | | | |
| 23 | V705-140-052-00 | RING,SNAP/52 C | * | 1 | | | | | |
| 24 | V707-140-062-00 | RING,SNAP/R62 | * | 1 | | | | | |
| 25 | 8595-201-025-00 | SEAL/OIL | * | 1 | | | | | |
| 26 | 2232-211-013-00 | CLUTCH/PLANTING | * | 1 | | | | | |
| 27 | 2232-211-014-10 | CLUCH/PLANTER/DRIVE | * | 1 | | | | | |
| 28 | 2180-203-002-00 | SPRING/HC028 | * | 1 | | | | | |
| 29 | 2232-211-200-10 | SHIFTER/CLUTCH/REVER | * | 1 | | | | | |
| 30 | V744-125-350-70 | SEAL,OIL/TC25357 | * | 1 | | | | | |

# FIG. 18 SHAFT(PLANTING INTERVAL, PLANTING/OUTPUT)SYSTEM

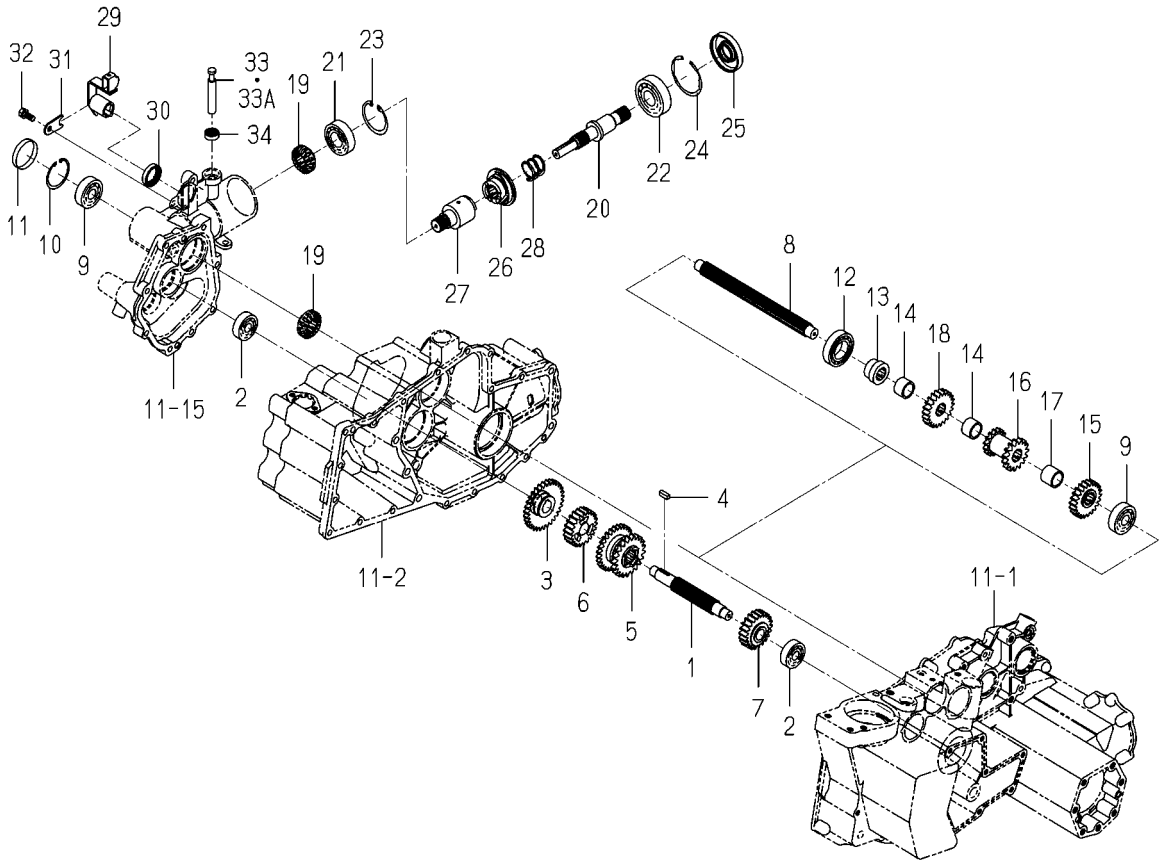


2233-211 -0100

| KEY | PART CODE | DESCRIPTION | SPC | TYPE OF MODEL NP80D E16 | | ITC | COL | GRP | REMARKS |
|---|---|---|---|---|---|---|---|---|---|
| 31 | 2232-211-016-00 | PLATE/PLANTING CLUTC | * | 1 | | | | | |
| 32 | 2144-701-021-10 | BOLT/SEAL/M8X16/S | * | 1 | | | | | |
| 33 | 2232-211-025-00 | PIN/PLANTING/CLUTCH | * | 1 -175 | | | | | |
| 33A | 2232-211-025-10 | PIN/PLANTING/CLUTCH | * | 1 176- | | 1 | | | |
| 34 | V744-112-220-70 | SEAL,OIL/TC12227 | * | 1 | | | | | |

# FIG. 19 SHIFT(DRIVE,PLANTING INTERVAL)SYSTEM

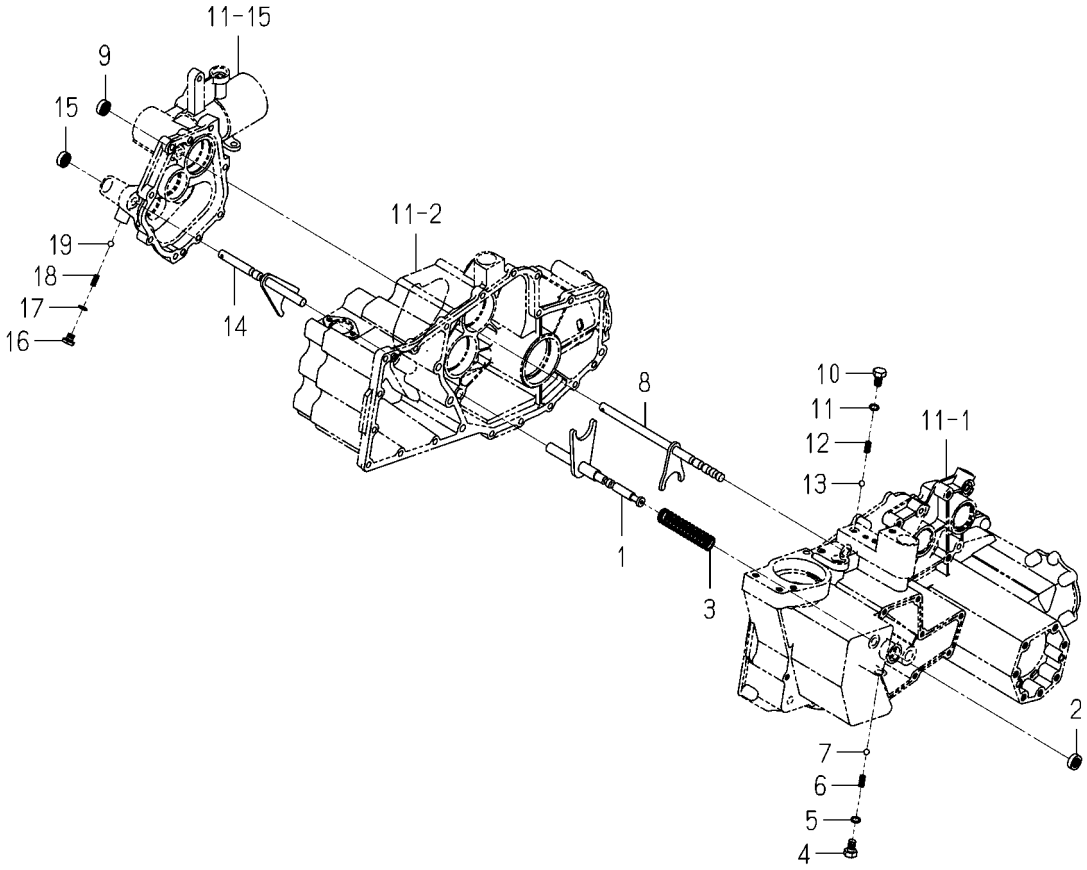


2232-212 -0100

| KEY | PART CODE | DESCRIPTION | SPC | TYPE OF MODEL NP80D E16 | | ITC | COL | GRP | REMARKS |
|---|---|---|---|---|---|---|---|---|---|
| 1 | 2232-212-200-10 | SHFTER/CHANGE/DRIVE | * | 1 | | | | | |
| 2 | V744-112-220-70 | SEAL,OIL/TC12227 | * | 1 | | | | | |
| 3 | 2232-212-001-00 | SPRING/HC100 | * | 1 | | | | | |
| 4 | 2194-210-001-00 | BOLT/10X16/PQ | * | 1 | | | | | |
| 5 | V720-101-901-00 | O-RING/1A,P10 | * | 1 | | | | | |
| 6 | 2132-210-005-00 | SPRING/SHIFTER/P | * | 1 | | | | | |
| 7 | V682-200-001-00 | BALL,STEEL | * | 1 | | | | | |
| 8 | 2232-212-210-00 | SHIFTER/PLANTING/MEI | * | 1 | | | | | |
| 9 | V744-112-220-70 | SEAL,OIL/TC12227 | * | 1 | | | | | |
| 10 | 2194-210-001-00 | BOLT/10X16/PQ | * | 1 | | | | | |
| 11 | V720-101-901-00 | O-RING/1A,P10 | * | 1 | | | | | |
| 12 | 2132-210-005-00 | SPRING/SHIFTER/P | * | 1 | | | | | |
| 13 | V682-200-001-00 | BALL,STEEL | * | 1 | | | | | |
| 14 | 2232-212-220-00 | SHIFTER/PLANTING/SUB | * | 1 | | | | | |
| 15 | V744-112-220-70 | SEAL,OIL/TC12227 | * | 1 | | | | | |
| 16 | 2232-212-003-00 | BOLT/SHIFT/PLANTING/ | * | 1 | | | | | |
| 17 | V720-101-901-00 | O-RING/1A,P10 | * | 1 | | | | | |
| 18 | 2132-210-005-00 | SPRING/SHIFTER/P | * | 1 | | | | | |
| 19 | V682-200-001-00 | BALL,STEEL | * | 1 | | | | | |

# FIG. 20 LEVER(PLANTING INTERVAL)SYSTEM

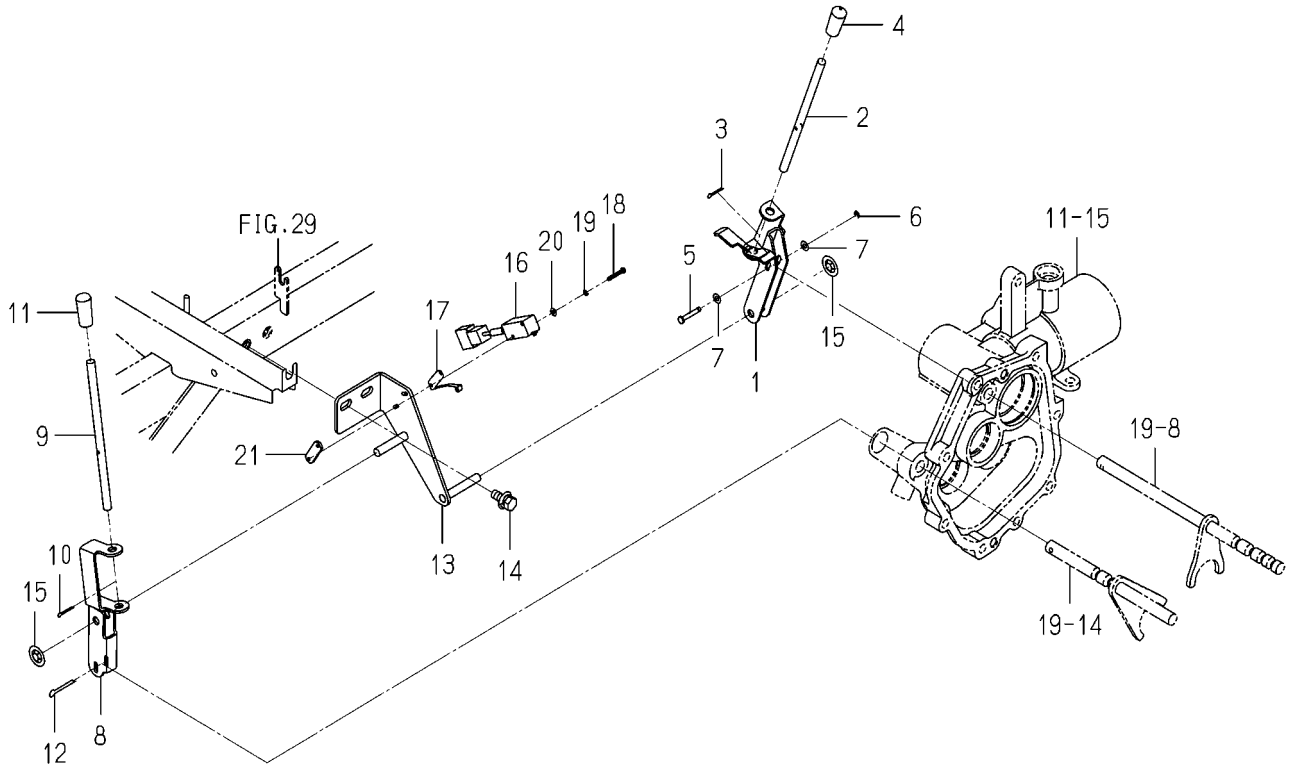


2232-213 -0100

| KEY | PART CODE | DESCRIPTION | SPC | TYPE OF MODEL NP80D E16 | | ITC | COL | GRP | REMARKS |
|---|---|---|---|---|---|---|---|---|---|
| 1 | 2232-213-220-40 | ARM/PLANTING/A COMP | * | 1 | | | | | |
| 2 | 2232-213-002-10 | ROD/PLANTING | * | 1 | | | | | |
| 3 | V500-162-501-50 | PIN,SPLIT/2.5X15 | * | 1 | | | | | |
| 4 | 2204-556-003-00 | CAP/GREEN/8 | * | 1 | | | | | |
| 5 | 2145-770-215-00 | PIN/25 | * | 1 | | | | | |
| 6 | 2145-770-214-00 | RING, SNAP | * | 1 | | | | | |
| 7 | V411-260-004-00 | WASHER,PL/M4 | * | 2 | | | | | |
| 8 | 2232-213-200-20 | ARM/PLANTING/B COMP | * | 1 | | | | | |
| 9 | 2232-213-002-10 | ROD/PLANTING | * | 1 | | | | | |
| 10 | V500-162-501-50 | PIN,SPLIT/2.5X15 | * | 1 | | | | | |
| 11 | 3838-620-002-00 | GRIP/07X34 | * | 1 | | | | | |
| 12 | V500-164-002-50 | PIN,SPLIT/4X25 | * | 1 | | | | | |
| 13 | 2232-213-210-20 | STAY/LEVER COMP | * | 1 | | | | | |
| 14 | V211-360-802-00 | BOLT,SP/M8X20 | * | 2 | | | | | |
| 15 | 2183-526-008-00 | BUSHPUSHNUT/08 | * | 2 | | | | | |
| 16 | 3807-836-350-00 | SWITCH ASSY | * | 1 | | | | | |
| 17 | 3807-836-400-00 | ACTUATOR ASSY | * | 1 | | | | | |
| 18 | V111-163-002-00 | SCREW/M3X20 | * | 2 | | | | | |
| 19 | V401-160-003-00 | WASHER,SP/M3 | * | 2 | | | | | |
| 20 | V411-260-003-00 | WASHER,PL/M3 | * | 2 | | | | | |
| 21 | 2186-124-052-00 | PLATE | * | 1 | | | | | |

# FIG. 21 PEDAL(CLUTCH/ DIFFERENTIAL GEAR)SYSTEM

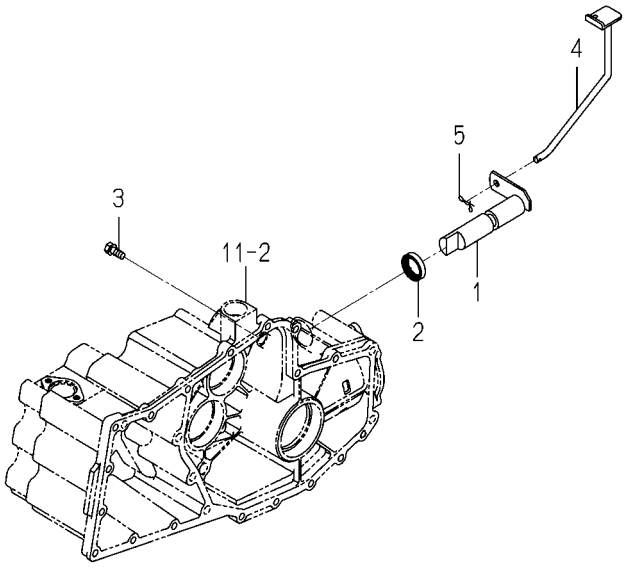


2232-215 -0100

| KEY | PART CODE | DESCRIPTION | SPC | TYPE OF MODEL NP80D E16 | | ITC | COL | GRP | REMARKS |
|---|---|---|---|---|---|---|---|---|---|
| 1 | 2232-215-210-00 | SHAFT/DIFFLOCK/NP | * | 1 | | | | | |
| 2 | V744-125-350-70 | SEAL,OIL/TC25357 | * | 1 | | | | | |
| 3 | 2161-214-003-00 | BOLT | * | 1 | | | | | |
| 4 | 2232-215-230-10 | PEDAL/DIFFLOCK COMP | * | 1 | | | | | |
| 5 | 2161-735-006-00 | PIN/STOPPER/8 | * | 1 | | | | | |

# FIG. 22 WHEEL(REAR)SYSTEM

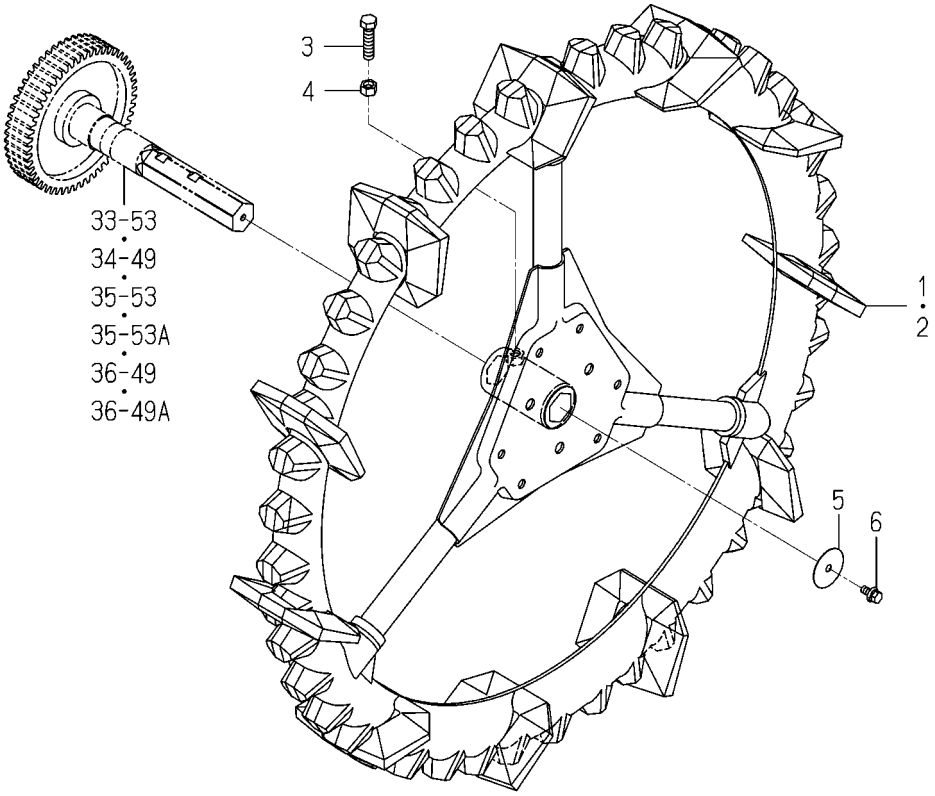


2233-222 -0100

| KEY | PART CODE | DESCRIPTION | SPC | TYPE OF MODEL NP80D E16 | | ITC | COL | GRP | REMARKS |
|---|---|---|---|---|---|---|---|---|---|
| 1 | 2233-222-200-20 | WHEEL/950/LH COMP | * | 1 | | | | | |
| 2 | 2233-222-210-20 | WHEEL/950/RH COMP | * | 1 | | | | | |
| 3 | 2204-222-001-00 | BOLT/M12X45 | * | 2 | | | | | |
| 4 | V304-260-012-00 | NUT/M12 | * | 2 | | | | | |
| 5 | 2142-307-002-00 | WASHER | * | 2 | | | | | |
| 6 | V211-360-802-00 | BOLT,SP/M8X20 | * | 2 | | | | | |

# FIG. 23 SHAFT(STEERING)SYSTEM

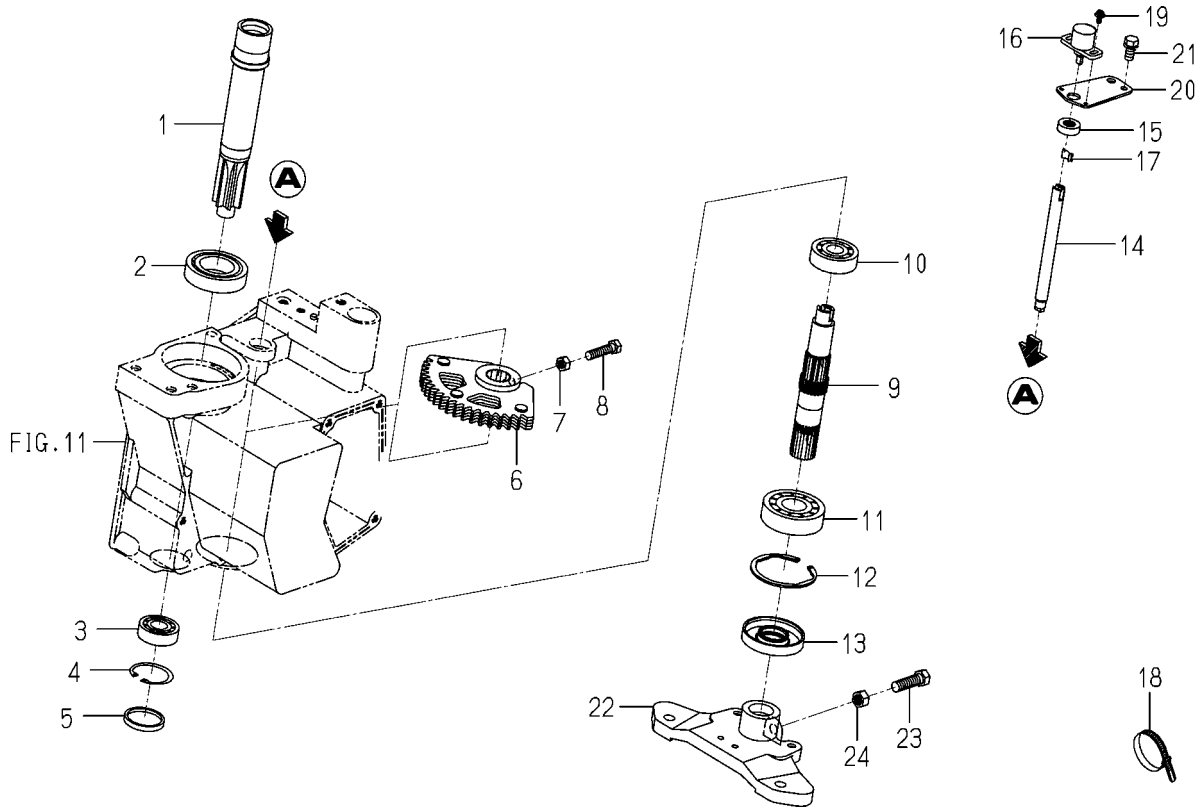


2232-302 -0100

| KEY | PART CODE | DESCRIPTION | SPC | TYPE OF MODEL NP80D E16 | | ITC | COL | GRP | REMARKS |
|---|---|---|---|---|---|---|---|---|---|
| 1 | 2232-302-210-00 | SHAFT/STEERING/IN | * | 1 | | | | | |
| 2 | V600-110-600-70 | BEARING,RB/6007 | * | 1 | | | | | |
| 3 | V600-110-620-30 | BEARING,RB/6203 | * | 1 | | | | | |
| 4 | V705-140-040-00 | RING,SNAP/40 C | * | 1 | | | | | |
| 5 | 1337-708-007-00 | COVER,METAL | * | 1 | | | | | |
| 6 | 2204-302-200-10 | GEAR,STERRING ARM | * | 1 | | | | | |
| 7 | V304-460-008-00 | NUT/M8/7T | * | 1 | | | | | |
| 8 | V201-360-803-50 | BOLT/M8X35/7T | * | 1 | | | | | |
| 9 | 2232-302-006-00 | SHAFT/STEARING/OUT | * | 1 | | | | | |
| 10 | V600-110-630-30 | BEARING,RB/6303 | * | 1 | | | | | |
| 11 | V600-110-630-50 | BEARING,RB/6305 | * | 1 | | | | | |
| 12 | V707-140-062-00 | RING,SNAP/R62 | * | 1 | | | | | |
| 13 | 8595-201-025-00 | SEAL/OIL | * | 1 | | | | | |
| 14 | 2232-302-002-10 | SHAFT/SENCER/STEERIN | * | 1 | | | | | |
| 15 | V744-112-220-70 | SEAL,OIL/TC12227 | * | 1 | | | | | |
| 16 | 2232-556-230-00 | SENSOR/ANGLE/330 | * | 1 | | | | | |
| 17 | 2232-556-032-00 | SPACER/SENSOR/ANGLE | * | 1 | | | | | |
| 18 | 1376-402-003-00 | BAND,WIRE/140 | * | 176-1 | | | | | |
| 19 | V120-364-001-00 | SCREW,SP/M4X10 | * | 180-2 | | | | | |
| 20 | 2232-302-003-00 | STAY/SENSOR/STEERING | * | 1 | | | | | |
| 21 | V211-260-801-60 | BOLT,S/M8X16 | * | 1 | | | | | |
| 22 | 2232-302-001-20 | ARM/PITMAN/6 | * | 1 | | | | | |
| 23 | V201-361-003-50 | BOLT/M10X35/7T | * | 1 | | | | | |
| 24 | V304-460-010-00 | NUT/M10/7T | * | 1 | | | | | |

# FIG. 24 ROD(TIE)SYSTEM

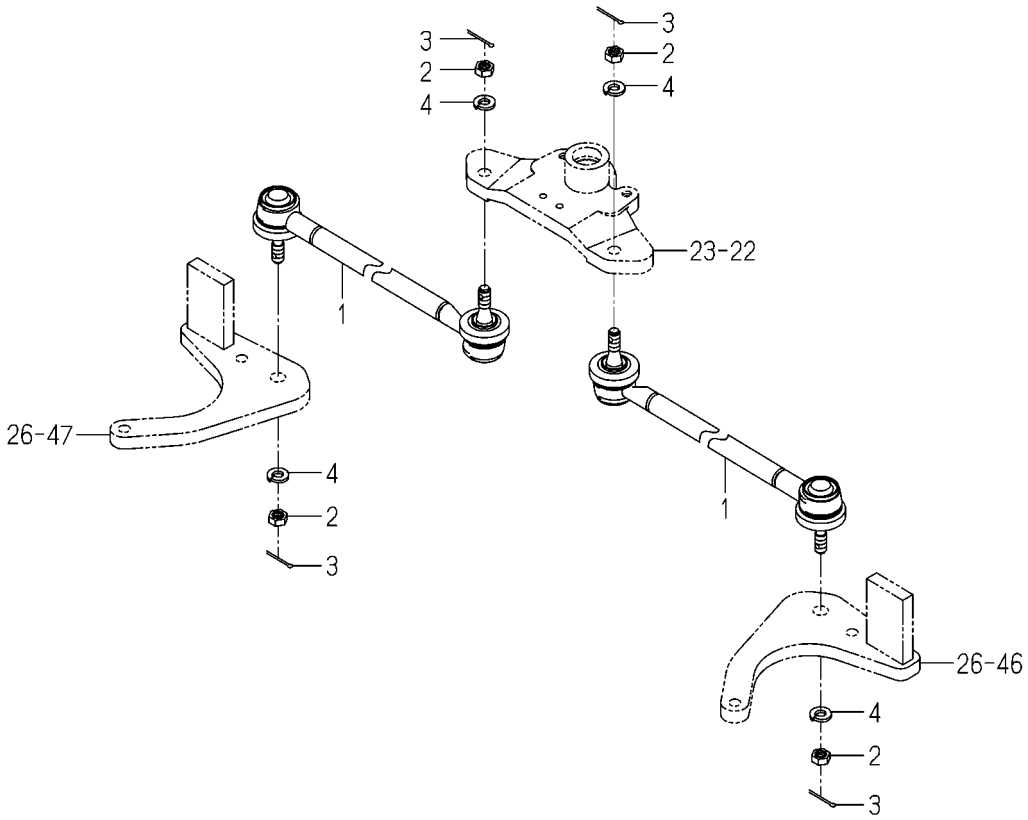


2232-303 -0100

| KEY | PART CODE | DESCRIPTION | SPC | TYPE OF MODEL NP80D E16 | | ITC | COL | GRP | REMARKS |
|---|---|---|---|---|---|---|---|---|---|
| 1 | 2232-303-260-10 | ROD/TIECOMP | * | 2 | | | | | |
| 2 | V335-260-010-00 | NUT/M10,P=1.25 | * | 4 | | | | | |
| 3 | V500-162-002-50 | PIN,SPLIT/2X25 | * | 4 | | | | | |
| 4 | V401-160-010-00 | WASHER,SP/M10 | * | 4 | | | | | |

# FIG. 25 TURN SYSTEM

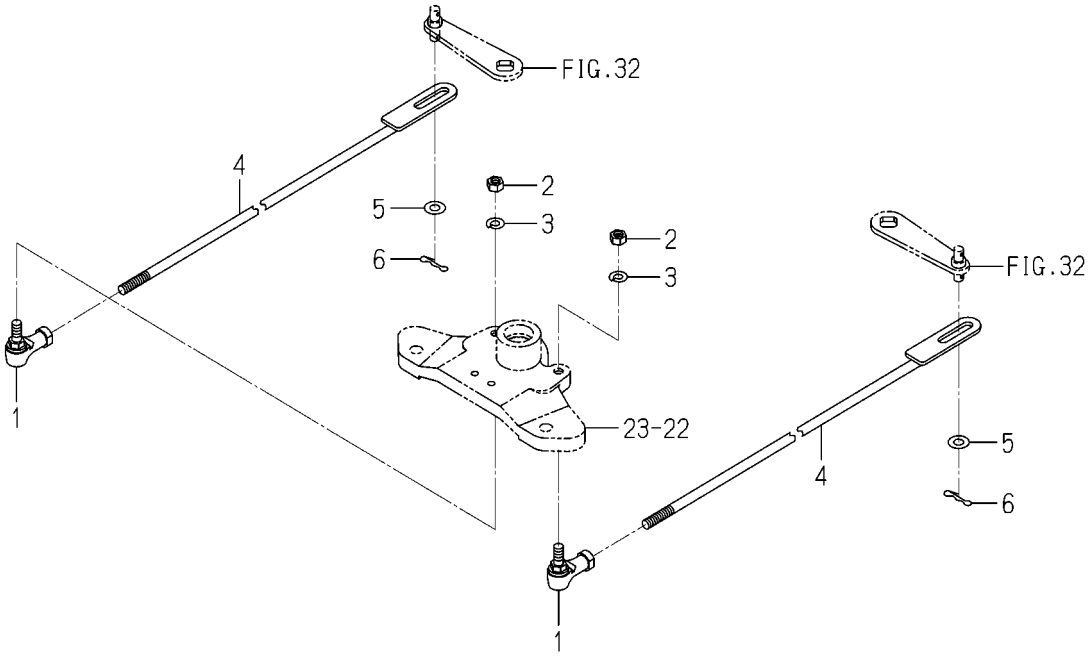


2232-304 -0100

| KEY | PART CODE | DESCRIPTION | SPC | TYPE OF MODEL NP80D | E16 | ITC | COL | GRP | REMARKS |
|---|---|---|---|---|---|---|---|---|---|
| 1 | 1560-695-021-00 | JOINT BALL M08RH | * | 2 | | | | | |
| 2 | V304-260-008-00 | NUT/M8 | * | 2 | | | | | |
| 3 | V401-160-008-00 | WASHER,SP/M8 | * | 2 | | | | | |
| 4 | 2232-304-200-30 | ROD/CLUTCH COMP | * | 2 | | | | | |
| 5 | V411-260-008-00 | WASHER,PL/M8 | * | 2 | | | | | |
| 6 | 2161-735-006-00 | PIN/STOPPER/8 | * | 2 | | | | | |

# FIG. 26 CASE(GEAR/FINAL)SYSTEM(1/2)

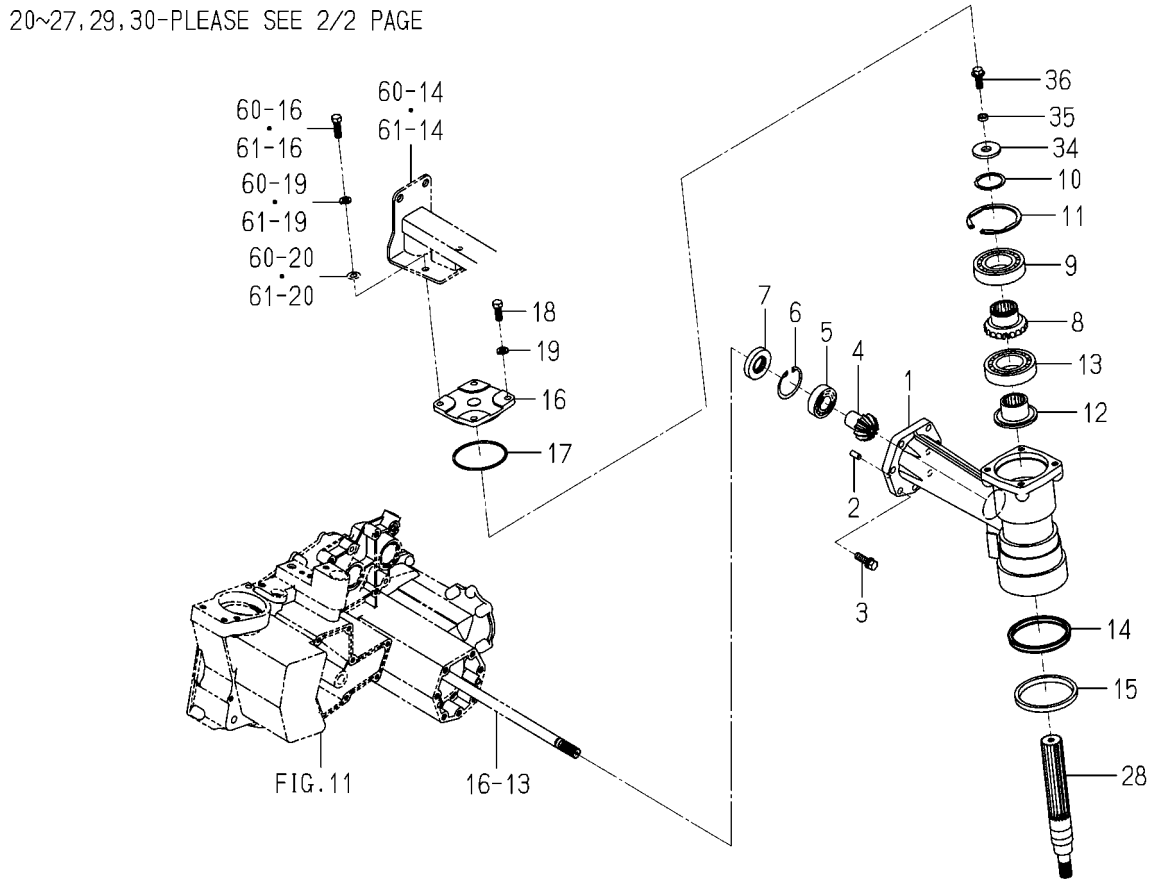


2233-310 -0100

| KEY | PART CODE | DESCRIPTION | SPC | TYPE OF MODEL NP80D | TYPE OF MODEL E16 | ITC | COL | GRP | REMARKS |
|---|---|---|---|---|---|---|---|---|---|
| 1 | 2232-310-001-30 | CASE/FINAL/UPPER | * | 2 | | | | | |
| 2 | V522-100-801-80 | PIN,ST,A/8X18 | * | 4 | | | | | |
| 3 | 2213-310-004-00 | BOLT/M10X35/S | * | 14 | | | | | |
| 4 | 2232-310-006-00 | GEAR/BEVEL/11 | * | 2 | | | | | |
| 5 | V600-110-620-50 | BEARING,RB/6205 | * | 2 | | | | | |
| 6 | V705-140-052-00 | RING,SNAP/52 C | * | 2 | | | | | |
| 7 | V744-125-521-00 | SEAL,OIL/TC255210 | * | 2 | | | | | |
| 8 | 2232-310-007-00 | GEAR/BEVEL/20 | * | 2 | | | | | |
| 9 | V600-110-620-90 | BEARING,RB/6209 | * | 2 | | | | | |
| 10 | V706-140-045-00 | RING,SNAP/S45 | * | 2 | | | | | |
| 11 | V707-140-085-00 | RING,SNAP/R85 | * | 2 | | | | | |
| 12 | 2232-310-005-00 | LINER/KINGPIN | * | 2 | | | | | |
| 13 | V600-110-620-90 | BEARING,RB/6209 | * | 2 | | | | | |
| 14 | 2232-310-018-00 | PACKING/90X105X9 | * | 2 | | | | | |
| 15 | 2232-310-019-00 | SEAL/DUST/92X104X8 | * | 2 | | | | | |
| 16 | 2232-310-002-10 | COVER/FRONT/UPPER | * | 2 | | | | | |
| 17 | V721-103-108-50 | O-RING/1A,G85 | * | 2 | | | | | |
| 18 | V201-361-002-50 | BOLT/M10X25/7T | * | 4 | | | | | |
| 19 | V401-160-010-00 | WASHER,SP/M10 | * | 4 | | | | | |
| 20 | 2233-310-400-00 | CASE/FINAL/LOWER/D | * | 2 | | | | | |
| 21 | 2233-310-011-00 | GEAR/BEVEL/10 | * | 2 | | | | | |
| 22 | 7932-201-002-00 | BEARING,RB/6306SH2 | * | 2 | | | | | |
| 23 | 7932-201-002-00 | BEARING,RB/6306SH2 | * | 2 | | | | | |
| 24 | V707-140-072-00 | RING,SNAP/R72 | * | 2 | | | | | |
| 25 | V600-110-620-70 | BEARING,RB/6207 | * | 2 | | | | | |
| 26 | 2233-310-013-00 | COLLAR/60X70X08 | * | 2 | | | | | |
| 27 | V781-160-000-4B | PLUG/SCREW/SEAL | * | 2 | | | | | |
| 28 | 2233-310-008-00 | SHAFT/KINGPIN/8 | * | 2 | | | | | |
| 29 | 2232-310-015-00 | SPRING/HC053 | * | 2 | | | | | |
| 30 | 2233-310-005-10 | SPRING/HC054 | * | 2 | | | | | |

# FIG. 26 CASE(GEAR/FINAL)SYSTEM(2/2)

34~36-PLEASE SEE 1/2 PAGE

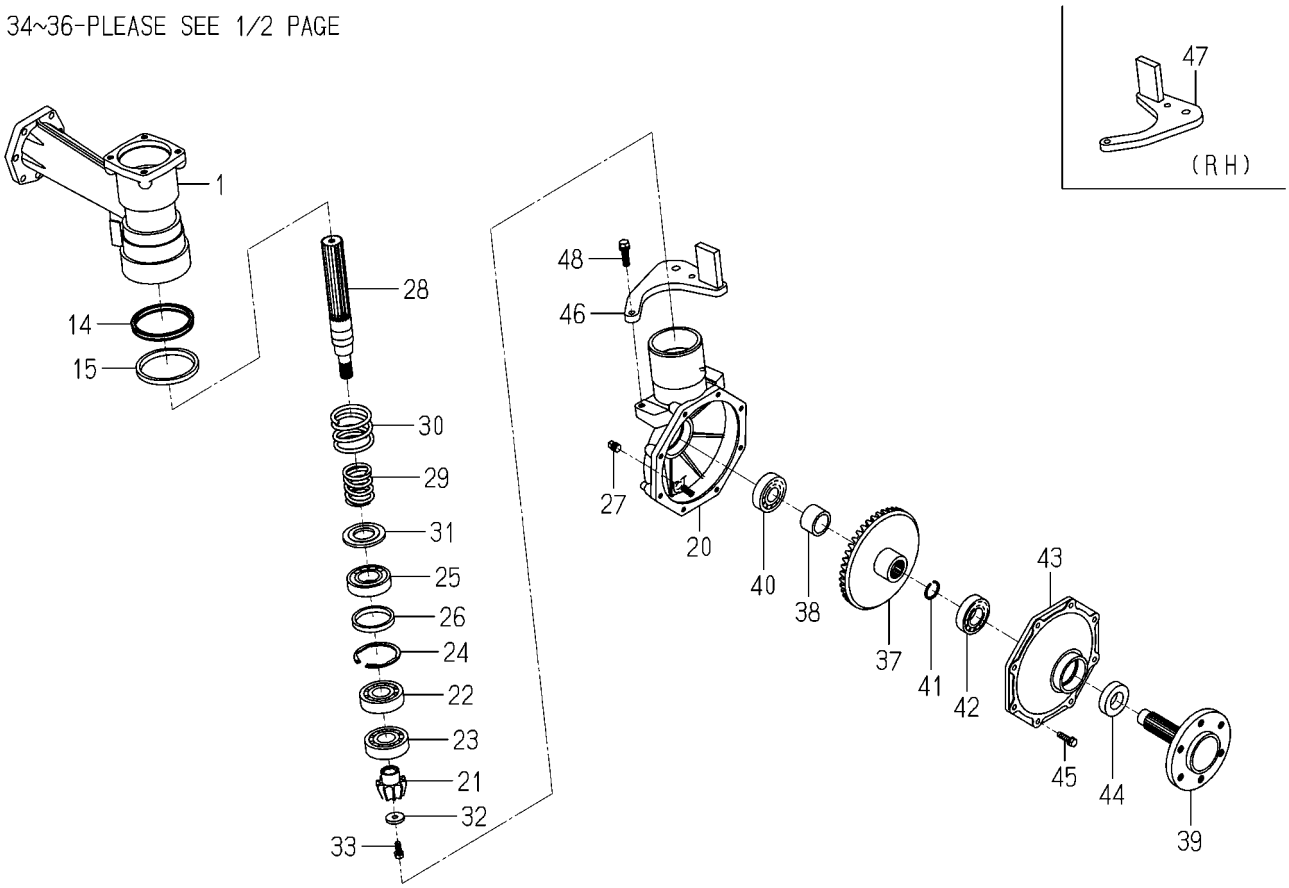


2233-310 -0100

| KEY | PART CODE | DESCRIPTION | SPC | TYPE OF MODEL NP80D E16 | | ITC | COL | GRP | REMARKS |
|---|---|---|---|---|---|---|---|---|---|
| 31 | 2232-310-013-10 | COLLAR/SPRING | * | 2 | | | | | |
| 32 | 2178-503-246-00 | WASHER/09X30X4.5 | * | 2 | | | | | |
| 33 | V211-560-802-00 | BOLT,S/M8X20/7T | * | 2 | | | | | |
| 34 | 2232-310-031-00 | WASHER/16X46X5 | * | 2 | | | | | |
| 35 | 2232-310-032-00 | COLLAR/11X25X5 | * | 2 | | | | | |
| 36 | 2232-310-033-00 | BOLT/FRANGE/M10X25 | * | 2 | | | | | |
| 37 | 2233-310-007-00 | GEAR/BEVEL/44 | * | 2 | | | | | |
| 38 | 2233-310-014-10 | COLLAR/32X43X21 | * | 2 | | | | | |
| 39 | 2232-310-012-10 | SHAFT/FRONTWHEEL | * | 2 | | | | | |
| 40 | V600-110-630-50 | BEARING,RB/6305 | * | 2 | | | | | |
| 41 | 2172-312-002-00 | RING,STOP/30 | * | 2 | | | | | |
| 42 | V600-110-620-60 | BEARING,RB/6206 | * | 2 | | | | | |
| 43 | 2233-310-002-00 | COVER/FAINAL/FRONT/D | * | 2 | | | | | |
| 44 | 2186-312-002-00 | SEAL,OIL 305514 | * | 2 | | | | | |
| 45 | V211-560-803-00 | BOLT,S/M8X30/7T | * | 16 | | | | | |
| 46 | 2232-310-200-00 | ARM/STOPPER/LH COMP | * | 1 | | | | | |
| 47 | 2232-310-210-00 | ARM/STOPPER/RH COMP | * | 1 | | | | | |
| 48 | 2213-310-004-00 | BOLT/M10X35/S | * | 4 | | | | | |

# FIG. 27 WHEEL(FRONT)SYSTEM

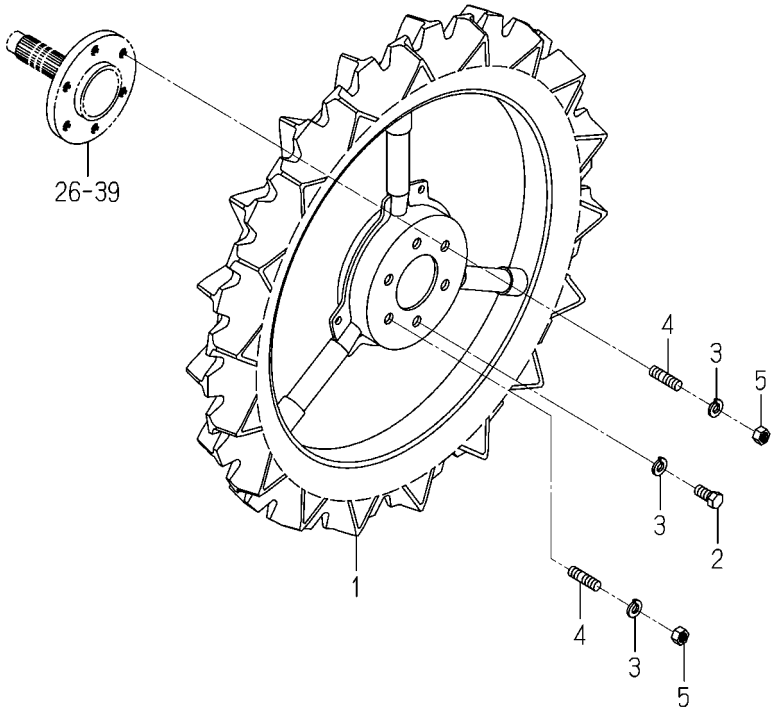


2233-316 -0100

| KEY | PART CODE | DESCRIPTION | SPC | TYPE OF MODEL NP80D E16 | | ITC | COL | GRP | REMARKS |
|---|---|---|---|---|---|---|---|---|---|
| 1 | 2233-316-200-10 | TIRE/FRONT/650/ COMP | * | 2 | | | | | |
| 2 | V201-361-202-50 | BOLT/M12X25/7T | * | 10 | | | | | |
| 3 | V401-160-012-00 | WASHER,SP/M12 | * | 12 | | | | | |
| 4 | V251-341-202-50 | STUD/M12X25/7T | * | 2 | | | | | |
| 5 | V304-460-012-00 | NUT/M12/7T | * | 2 | | | | | |

# FIG. 28 CAP(WHEEL/FRONT)SYSTEM

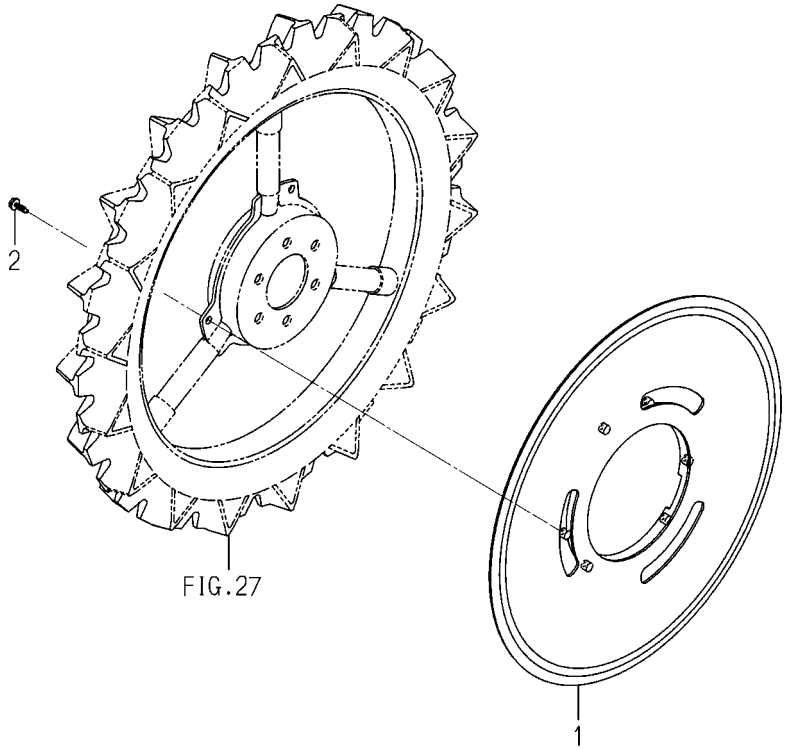


2232-317 -0100

| KEY | PART CODE | DESCRIPTION | SPC | TYPE OF MODEL NP80D E16 | | ITC | COL | GRP | REMARKS |
|---|---|---|---|---|---|---|---|---|---|
| 1 | 2232-317-001-10 | CAP/FRONTWHEEL/650 | * | 2 | | | | | |
| 2 | 2213-508-004-00 | TAPBOLT/6X20 | * | 6 | | | | | |

# FIG. 29 FRAME(MAIN)SYSTEM

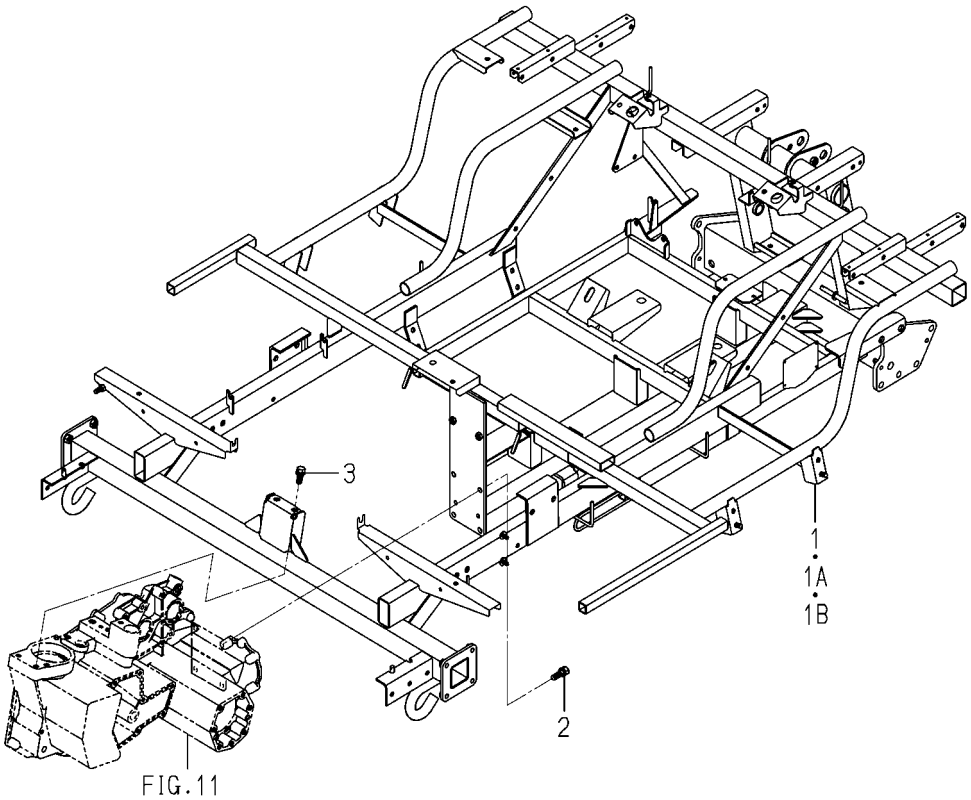


2232-320D-0100

| KEY | PART CODE | DESCRIPTION | SPC | TYPE OF MODEL NP80D | TYPE OF MODEL E16 | ITC | COL | GRP | REMARKS |
|---|---|---|---|---|---|---|---|---|---|
| 1 | 2232-320-750-00 | FRAME/MAIN/D/E1 COMP | * | 1 -175 | | | | | |
| 1A | 2232-320-750-10 | FRAME/MAIN/D/E1 COMP | * | 1 -198 | | 1 | | | |
| 1B | 2232-320-750-30 | FRAME/MAIN/D/E1 COMP | * | 1 199- | | 1 | | | |
| 2 | 2204-323-011-00 | BOLT/SEAL/M10X30/S | * | 4 | | | | | |
| 3 | 2204-601-007-10 | BOLT/SEAL/M10X25/S | * | 2 | | | | | |

# FIG. 30 SHAFT(DRIVE/REAR)SYSTEM

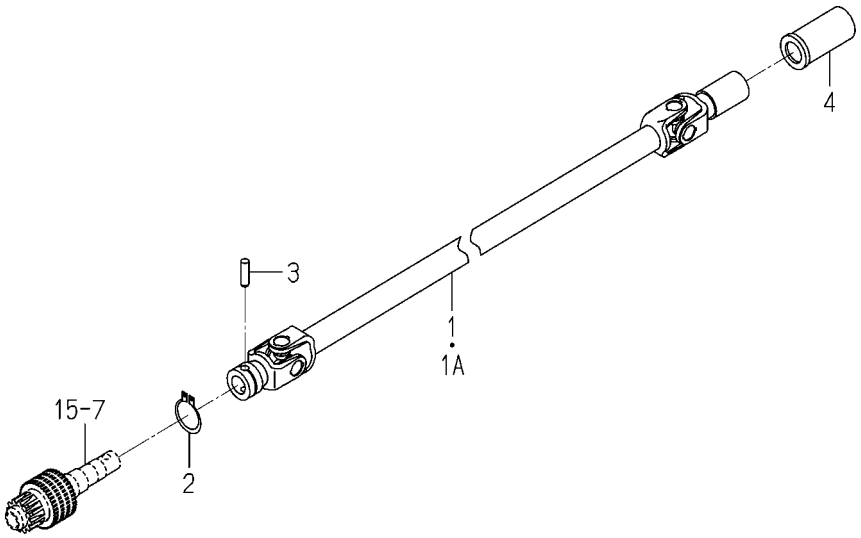


2233-321 -0100

| KEY | PART CODE | DESCRIPTION | SPC | TYPE OF MODEL NP80D E16 | | ITC | COL | GRP | REMARKS |
|---|---|---|---|---|---|---|---|---|---|
| 1 | 2233-321-200-00 | JOINT/REAR/1200/D | * | 2 -175 | | | | | |
| 1A | 2233-321-200-10 | JOINT/REAR/1200/D | * | 2 176- | | 1 | | | |
| 2 | V704-140-032-00 | RING,SNAP/32 C | * | 2 | | | | | |
| 3 | 2161-321-001-00 | PIN STRAIGHT | * | 2 | | | | | |
| 4 | 2194-321-001-00 | BOOT,DRIVE SHAFT | * | 2 | | | | | |

# FIG. 31 SHAFT(PLANTING)SYSTEM

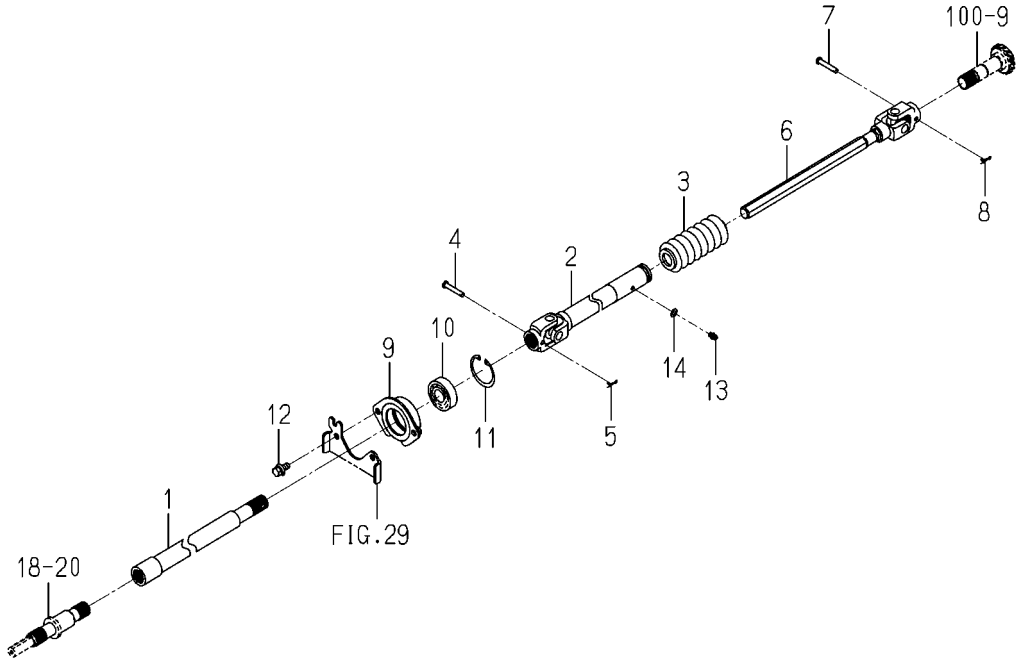


2233-322A-0100

| KEY | PART CODE | DESCRIPTION | SPC | TYPE OF MODEL NP80D E16 | | ITC | COL | GRP | REMARKS |
|---|---|---|---|---|---|---|---|---|---|
| 1 | 2232-322-200-10 | SHAFT/PLANT/FRONT/12 | * | 1 | | | | | |
| 2 | 2232-322-210-40 | SHAFT/JOINT/PLANT | * | 1 | | | | | |
| 3 | 2145-420-001-20 | BOOT/SHAFT | * | 1 | | | | | |
| 4 | 2232-322-001-00 | PIN/06X36 | * | 1 | | | | | |
| 5 | 2161-735-005-00 | PIN | * | 1 | | | | | |
| 6 | 2232-322-220-10 | SHAFT/PLANT/REA COMP | * | 1 | | | | | |
| 7 | 2232-322-001-00 | PIN/06X36 | * | 1 | | | | | |
| 8 | 2161-735-005-00 | PIN | * | 1 | | | | | |
| 9 | 2232-322-230-20 | HOLDER/SHAFT/PLANT | * | 1 | | | | | |
| 10 | V600-150-620-40 | BEARING,RB/6204SS | * | 1 | | | | | |
| 11 | V705-140-047-00 | RING,SNAP/47 C | * | 1 | | | | | |
| 12 | V211-360-802-00 | BOLT,SP/M8X20 | * | 2 | | | | | |
| 13 | V760-150-000-00 | NIPPLE,GREASE | * | 1 | | | | | |
| 14 | V411-260-006-00 | WASHER,PL/M6 | * | 1 | | | | | |

# FIG. 32 SHAFT(BRAKE)SYSTEM

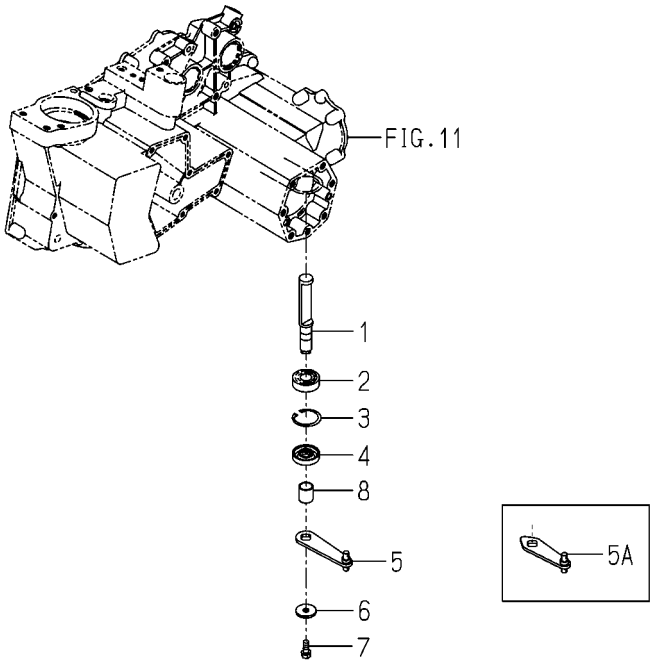


2233-325 -0100

| KEY | PART CODE | DESCRIPTION | SPC | TYPE OF MODEL NP80D E16 | | ITC | COL | GRP | REMARKS |
|---|---|---|---|---|---|---|---|---|---|
| 1 | 2232-325-001-00 | SIFTER/CLUTCH | * | 2 | | | | | |
| 2 | V600-110-620-30 | BEARING,RB/6203 | * | 2 | | | | | |
| 3 | V705-140-040-00 | RING,SNAP/40 C | * | 2 | | | | | |
| 4 | V744-117-400-80 | SEAL,OIL/TC17408 | * | 2 | | | | | |
| 5 | 2233-325-200-00 | ARM/CLUTCH/8 COMP | * | 2 -80 | | | | | |
| 5A | 2233-325-200-20 | ARM/CLUTCH/8 COMP | * | 2 81- | | 3 | | | |
| 6 | 3740-314-017-00 | WASHER,TENSION | * | 2 | | | | | |
| 7 | 2161-214-003-00 | BOLT | * | 2 | | | | | |
| 8 | 2232-325-003-10 | TUBE/18X24 | * | 2 | | | | | |

# FIG. 33 CASE(REAR)SYSTEM(ZRF TYPE)(1/2)

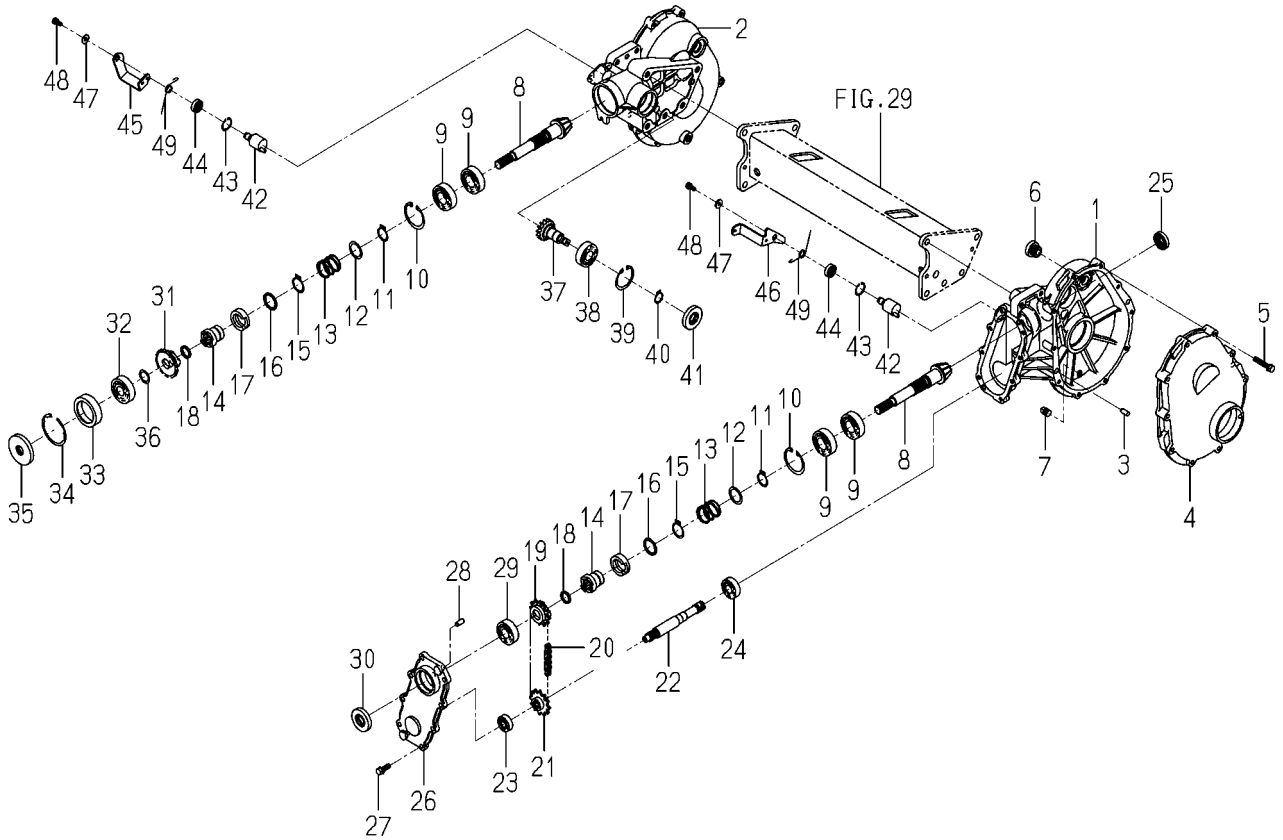


2233-330 -0100

| KEY | PART CODE | DESCRIPTION | SPC | TYPE OF MODEL NP80D E16 | | ITC | COL | GRP | REMARKS |
|---|---|---|---|---|---|---|---|---|---|
| 1 | 2232-330-001-30 | CASE/REAR/IN/LH | * | 1 | | | | | |
| 2 | 2232-330-002-20 | CASE/REAR/IN/RH | * | 1 | | | | | |
| 3 | V522-100-801-80 | PIN,ST,A/8X18 | * | 4 | | | | | |
| 4 | 2213-330-006-10 | CASE/REAR/OUT/8D | * | 2 | | | | | |
| 5 | V211-560-804-50 | BOLT,S/M8X45/7T | * | 20 | | | | | |
| 6 | 2157-201-004-10 | PLUG,OIL | * | 2 | | | | | |
| 7 | V781-160-000-4B | PLUG/SCREW/SEAL | * | 2 | | | | | |
| 8 | 2233-330-005-10 | GEAR/BEVEL/10/FERTIL | * | 2 | | | | | |
| 9 | 1594-221-001-00 | BEARING/BALL 6205SH2 | * | 4 | | | | | |
| 10 | V705-140-052-00 | RING,SNAP/52 C | * | 2 | | | | | |
| 11 | V704-140-025-00 | RING,SNAP/25 C | * | 2 | | | | | |
| 12 | 2232-330-033-00 | WASHER/27X36X1 | * | 2 | | | | | |
| 13 | 2232-330-053-00 | SPRING/HC033 | * | 2 | | | | | |
| 14 | 2232-330-013-10 | CLUTCH/DRIVE | * | 2 | | | | | |
| 15 | V704-140-028-00 | RING,SNAP/28 C | * | 2 | | | | | |
| 16 | 2232-330-042-00 | COLLAR/28X35X02 | * | 2 | | | | | |
| 17 | 2232-330-018-50 | COLLAR/CLUTCH | * | 2 | | | | | |
| 18 | 2232-330-032-00 | COLLAR/20X25X3.2 | * | 2 | | | | | |
| 19 | 2232-330-015-00 | SPROCKET/12/DRIVE | * | 1 | | | | | |
| 20 | 2232-330-023-00 | CHAIN/ROLLER/41X034 | * | 1 | | | | | |
| 21 | 2232-330-016-10 | SPROCKET/12/DRIVEN | * | 1 | | | | | |
| 22 | 2232-330-017-00 | SHAFT/OUTPUT/ROTOR | * | 1 | | | | | |
| 23 | V600-110-620-10 | BEARING,RB/6201 | * | 1 | | | | | |
| 24 | V600-110-620-30 | BEARING,RB/6203 | * | 1 | | | | | |
| 25 | V744-117-350-70 | SEAL,OIL/TC17357 | * | 1 | | | | | |
| 26 | 2232-330-004-00 | COVER/REAR/INPUT | * | 1 | | | | | |
| 27 | V211-260-802-50 | BOLT,S/M8X25 | * | 8 | | | | | |
| 28 | V522-100-801-80 | PIN,ST,A/8X18 | * | 2 | | | | | |
| 29 | V600-110-620-40 | BEARING,RB/6204 | * | 1 | | | | | |
| 30 | 2161-330-004-00 | SEAL,OIL/SDD7/204 | * | 1 | | | | | |

# FIG. 33 CASE(REAR)SYSTEM(ZRF TYPE)(2/2)

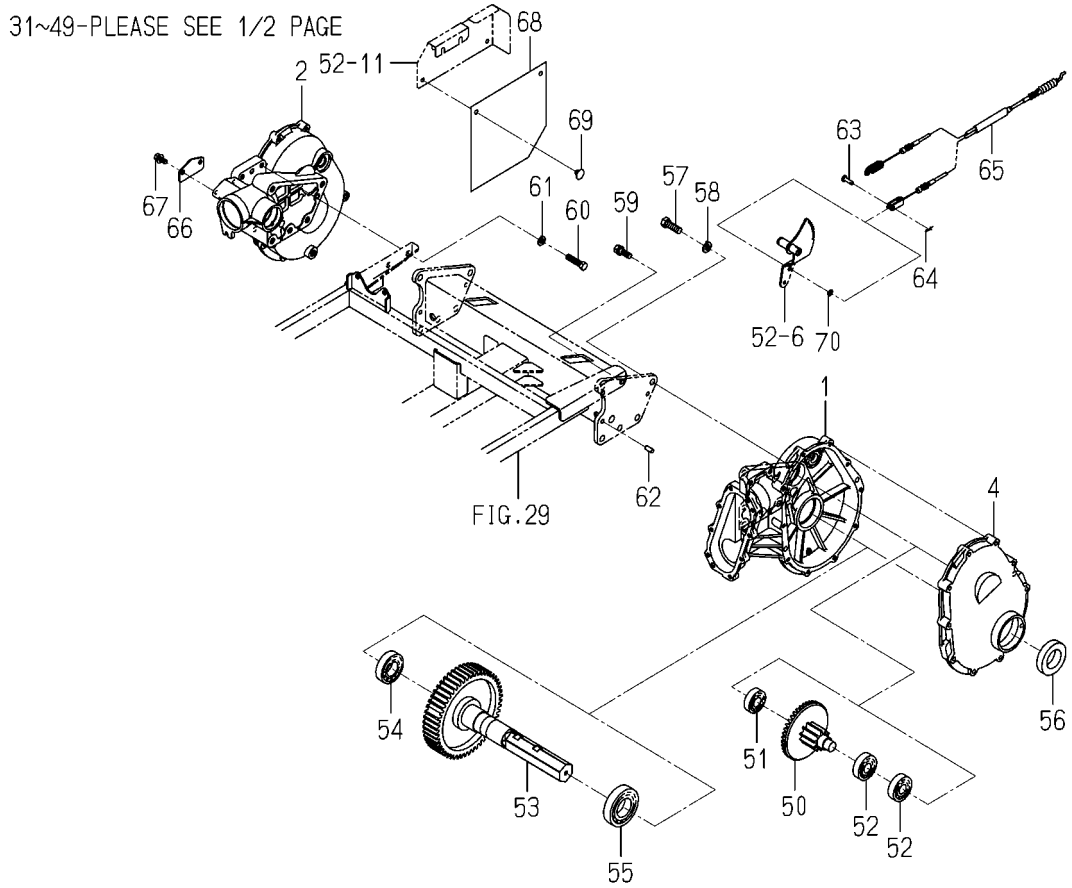


2233-330 -0100

| KEY | PART CODE | DESCRIPTION | SPC | TYPE OF MODEL NP80D E16 | | ITC | COL | GRP | REMARKS |
|---|---|---|---|---|---|---|---|---|---|
| 31 | 2233-330-053-00 | CLUTCH/DRIVEN/FERTIL | * | 1 | | | | | |
| 32 | V600-110-630-40 | BEARING,RB/6304 | * | 1 | | | | | |
| 33 | 2232-330-054-00 | METAL/52X62X16 | * | 1 | | | | | |
| 34 | V707-140-062-00 | RING,SNAP/R62 | * | 1 | | | | | |
| 35 | 2232-330-022-00 | SEAL/OIL | * | 1 | | | | | |
| 36 | 2194-419-009-00 | WASHER/20X28X01 | * | 1 | | | | | |
| 37 | 2232-330-039-00 | SHAFT/FERTILIZE | * | 1 | | | | | |
| 38 | V600-110-620-40 | BEARING,RB/6204 | * | 1 | | | | | |
| 39 | V705-140-047-00 | RING,SNAP/47 C | * | 1 | | | | | |
| 40 | V704-140-020-00 | RING,SNAP/20 C | * | 1 | | | | | |
| 41 | 2161-330-004-00 | SEAL,OIL/SDD7/204 | * | 1 | | | | | |
| 42 | 2232-330-220-00 | SHIFTER/FERTILIZER | * | 2 | | | | | |
| 43 | V705-140-025-00 | RING,SNAP/25 C | * | 2 | | | | | |
| 44 | V744-112-250-70 | SEAL,OIL/TC12257 | * | 2 | | | | | |
| 45 | 2232-330-041-10 | ARM/CLUCH/FERTILIZE | * | 1 | | | | | |
| 46 | 2233-330-051-00 | ARM/CLUCH/ROTOR | * | 1 | | | | | |
| 47 | 3560-503-302-00 | WASHER,WIRE TENSION | * | 2 | | | | | |
| 48 | V210-260-601-60 | BOLT,S/M6X16 | * | 2 | | | | | |
| 49 | 2232-330-043-10 | SPRING/HT015 | * | 2 | | | | | |
| 50 | 2233-330-200-10 | SHAFT/COUNTER/41-9 | * | 2 | | | | | |
| 51 | 1564-263-002-00 | BEARING,BALL | * | 2 | | | | | |
| 52 | 1560-214-003-00 | BEARING/BALL/6304SH2 | * | 4 | | | | | |
| 53 | 2233-330-230-20 | SHAFT/REAR/WHEEL/8 | * | 2 | | | | | |
| 54 | V600-110-620-60 | BEARING,RB/6206 | * | 2 | | | | | |
| 55 | V600-110-620-80 | BEARING,RB/6208 | * | 2 | | | | | |
| 56 | 2162-330-007-00 | SEAL,WHEEL SHAFT | * | 2 | | | | | |
| 57 | 2232-330-045-00 | BOLT/SEAL/M12X35 | * | 10 | | | | | |
| 58 | V402-160-012-00 | WASHER,SP/M12 | * | 10 | | | | | |
| 59 | 2204-323-011-00 | BOLT/SEAL/M10X30/S | * | 2 | | | | | |
| 60 | V201-361-004-0B | BOLT/M10X40/7T,SEAL | * | 2 | | | | | |

# FIG. 33 CASE(REAR)SYSTEM(ZRF TYPE)(2/2)

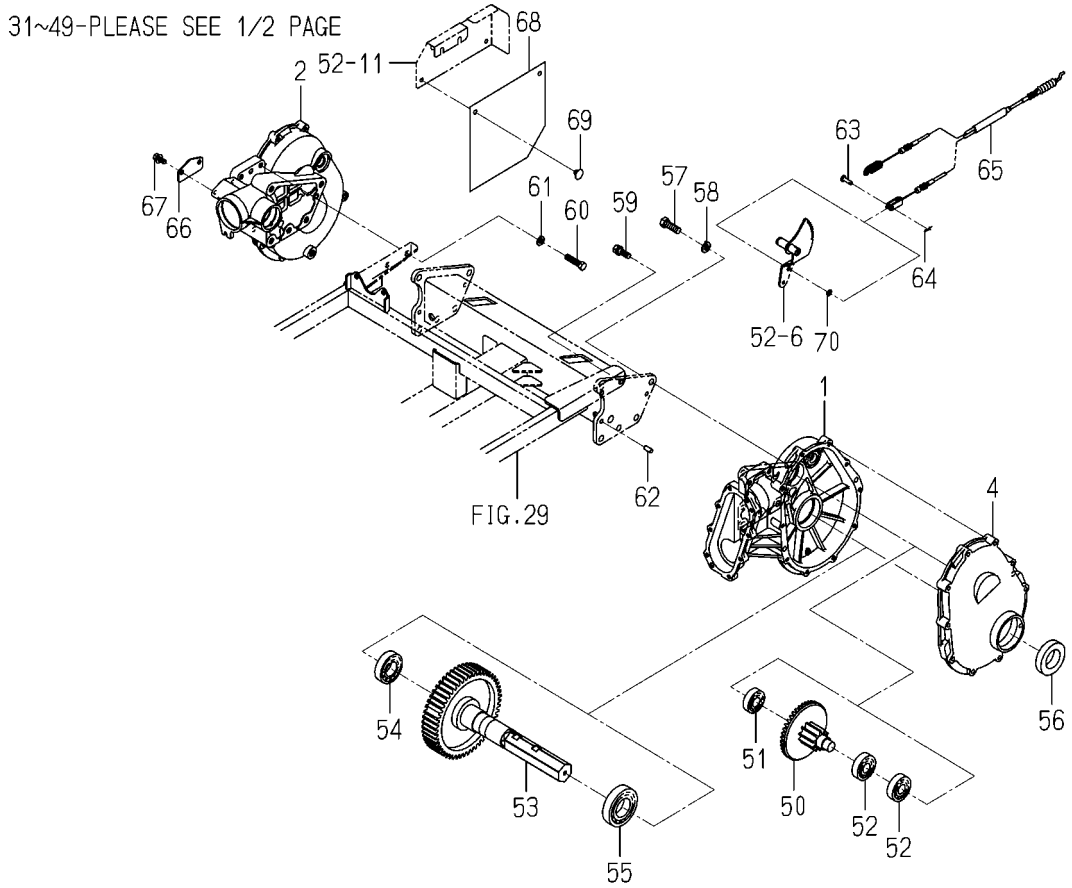


2233-330 -0100

| KEY | PART CODE | DESCRIPTION | SPC | TYPE OF MODEL NP80D E16 | | ITC | COL | GRP | REMARKS |
|---|---|---|---|---|---|---|---|---|---|
| 61 | V401-160-010-00 | WASHER,SP/M10 | * | 2 | | | | | |
| 62 | V522-100-801-80 | PIN,ST,A/8X18 | * | 4 | | | | | |
| 63 | 2111-441-019-20 | PIN/2 | * | 1 | | | | | |
| 64 | 2161-735-005-00 | PIN | * | 1 | | | | | |
| 65 | 2233-330-041-00 | CABLE/CLUCH/FERTILIZ | * | 1 | | | | | |
| 66 | 2232-330-052-00 | COVER/CLUTCH/FERTILI | * | 1 | | | | | |
| 67 | V211-360-802-00 | BOLT,SP/M8X20 | * | 2 | | | | | |
| 68 | 2232-422-025-00 | COVER/FERTIRIZE CLUT | * | 1 | | | | | |
| 69 | 2186-508-017-00 | CLIP,MAT/SUNSET GRAY | * | 2 | | | | | |
| 70 | V411-260-006-00 | WASHER,PL/M6 | * | 1 | | | | | |

# FIG. 34 CASE(REAR)SYSTEM(ZR TYPE EXCEPT F)(1/2)

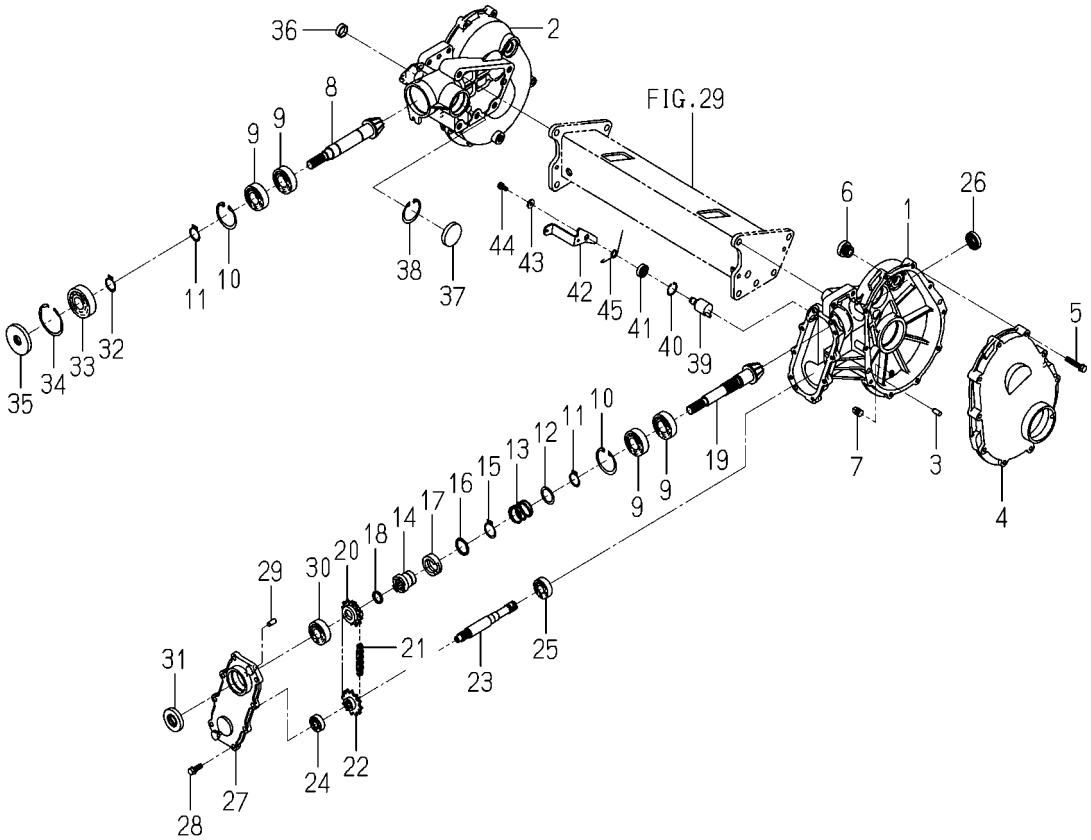


2233-330B-0100

| KEY | PART CODE | DESCRIPTION | SPC | TYPE OF MODEL NP80D E16 | | ITC | COL | GRP | REMARKS |
|---|---|---|---|---|---|---|---|---|---|
| 1 | 2232-330-001-30 | CASE/REAR/IN/LH | * | 1 | | | | | |
| 2 | 2232-330-002-20 | CASE/REAR/IN/RH | * | 1 | | | | | |
| 3 | V522-100-801-80 | PIN,ST,A/8X18 | * | 4 | | | | | |
| 4 | 2213-330-006-10 | CASE/REAR/OUT/8D | * | 2 | | | | | |
| 5 | V211-560-804-50 | BOLT,S/M8X45/7T | * | 20 | | | | | |
| 6 | 2157-201-004-10 | PLUG,OIL | * | 2 | | | | | |
| 7 | V781-160-000-4B | PLUG/SCREW/SEAL | * | 2 | | | | | |
| 8 | 2233-330-004-10 | GEAR/BEVEL/10/8 | * | 1 | | | | | |
| 9 | 1594-221-001-00 | BEARING/BALL 6205SH2 | * | 4 | | | | | |
| 10 | V705-140-052-00 | RING,SNAP/52 C | * | 2 | | | | | |
| 11 | V704-140-025-00 | RING,SNAP/25 C | * | 2 | | | | | |
| 12 | 2232-330-033-00 | WASHER/27X36X1 | * | 1 | | | | | |
| 13 | 2232-330-053-00 | SPRING/HC033 | * | 1 | | | | | |
| 14 | 2232-330-013-10 | CLUTCH/DRIVE | * | 1 | | | | | |
| 15 | V704-140-028-00 | RING,SNAP/28 C | * | 1 | | | | | |
| 16 | 2232-330-042-00 | COLLAR/28X35X02 | * | 1 | | | | | |
| 17 | 2232-330-018-50 | COLLAR/CLUTCH | * | 1 | | | | | |
| 18 | 2232-330-032-00 | COLLAR/20X25X3.2 | * | 1 | | | | | |
| 19 | 2233-330-005-10 | GEAR/BEVEL/10/FERTIL | * | 1 | | | | | |
| 20 | 2232-330-015-00 | SPROCKET/12/DRIVE | * | 1 | | | | | |
| 21 | 2232-330-023-00 | CHAIN/ROLLER/41X034 | * | 1 | | | | | |
| 22 | 2232-330-016-10 | SPROCKET/12/DRIVEN | * | 1 | | | | | |
| 23 | 2232-330-017-00 | SHAFT/OUTPUT/ROTOR | * | 1 | | | | | |
| 24 | V600-110-620-10 | BEARING,RB/6201 | * | 1 | | | | | |
| 25 | V600-110-620-30 | BEARING,RB/6203 | * | 1 | | | | | |
| 26 | V744-117-350-70 | SEAL,OIL/TC17357 | * | 1 | | | | | |
| 27 | 2232-330-004-00 | COVER/REAR/INPUT | * | 1 | | | | | |
| 28 | V211-260-802-50 | BOLT,S/M8X25 | * | 8 | | | | | |
| 29 | V522-100-801-80 | PIN,ST,A/8X18 | * | 2 | | | | | |
| 30 | V600-110-620-40 | BEARING,RB/6204 | * | 1 | | | | | |

# FIG. 34 CASE(REAR)SYSTEM(ZR TYPE EXCEPT F)(2/2)

31~45-PLEASE SEE 1/2 PAGE

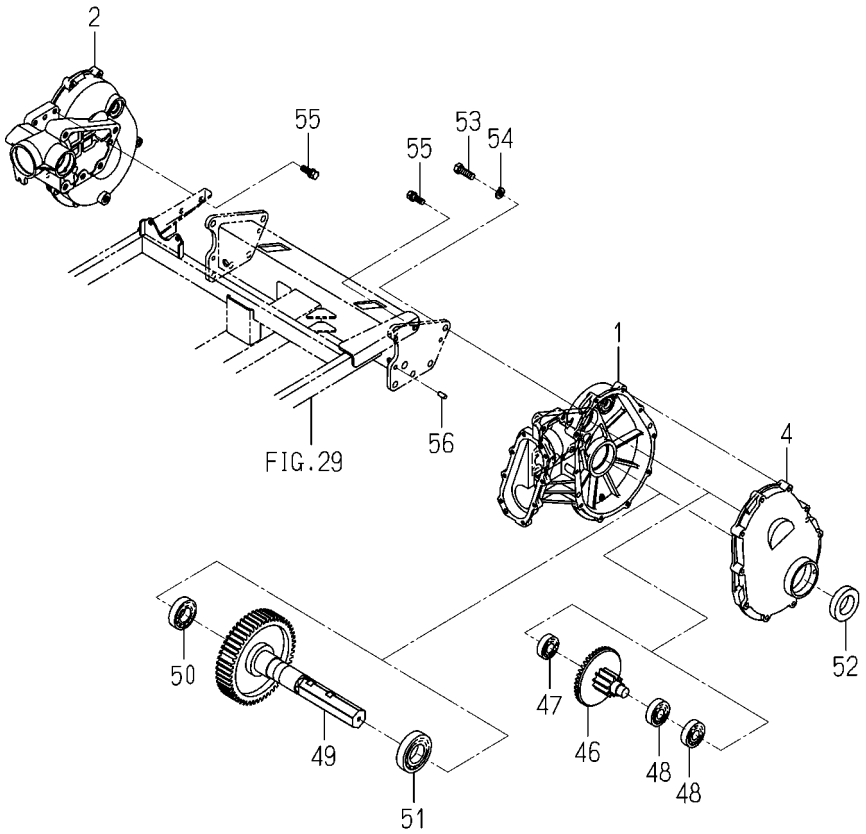


2233-330B-0100

| KEY | PART CODE | DESCRIPTION | SPC | TYPE OF MODEL NP80D E16 | | ITC | COL | GRP | REMARKS |
|---|---|---|---|---|---|---|---|---|---|
| 31 | 2161-330-004-00 | SEAL,OIL/SDD7/204 | * | 1 | | | | | |
| 32 | V704-140-025-00 | RING,SNAP/25 C | * | 1 | | | | | |
| 33 | V600-110-630-50 | BEARING,RB/6305 | * | 1 | | | | | |
| 34 | V707-140-062-00 | RING,SNAP/R62 | * | 1 | | | | | |
| 35 | 2232-330-022-00 | SEAL/OIL | * | 1 | | | | | |
| 36 | 2194-419-020-00 | PLUG/25X08 | * | 1 | | | | | |
| 37 | 2194-701-010-00 | PLUG/47 | * | 1 | | | | | |
| 38 | V705-140-047-00 | RING,SNAP/47 C | * | 1 | | | | | |
| 39 | 2232-330-220-00 | SHIFTER/FERTILIZER | * | 1 | | | | | |
| 40 | V705-140-025-00 | RING,SNAP/25 C | * | 1 | | | | | |
| 41 | V744-112-250-70 | SEAL,OIL/TC12257 | * | 1 | | | | | |
| 42 | 2233-330-051-00 | ARM/CLUCH/ROTOR | * | 1 | | | | | |
| 43 | 3560-503-302-00 | WASHER,WIRE TENSION | * | 1 | | | | | |
| 44 | V210-260-601-60 | BOLT,S/M6X16 | * | 1 | | | | | |
| 45 | 2232-330-043-10 | SPRING/HT015 | * | 1 | | | | | |
| 46 | 2233-330-200-10 | SHAFT/COUNTER/41-9 | * | 2 | | | | | |
| 47 | 1564-263-002-00 | BEARING,BALL | * | 2 | | | | | |
| 48 | 1560-214-003-00 | BEARING/BALL/6304SH2 | * | 4 | | | | | |
| 49 | 2233-330-230-20 | SHAFT/REAR/WHEEL/8 | * | 2 | | | | | |
| 50 | V600-110-620-60 | BEARING,RB/6206 | * | 2 | | | | | |
| 51 | V600-110-620-80 | BEARING,RB/6208 | * | 2 | | | | | |
| 52 | 2162-330-007-00 | SEAL,WHEEL SHAFT | * | 2 | | | | | |
| 53 | 2232-330-045-00 | BOLT/SEAL/M12X35 | * | 10 | | | | | |
| 54 | V402-160-012-00 | WASHER,SP/M12 | * | 10 | | | | | |
| 55 | 2204-323-011-00 | BOLT/SEAL/M10X30/S | * | 4 | | | | | |
| 56 | V522-100-801-80 | PIN,ST,A/8X18 | * | 4 | | | | | |

# FIG. 35 CASE(REAR)SYSTEM(F TYPE EXCEPT Z)(1/2)

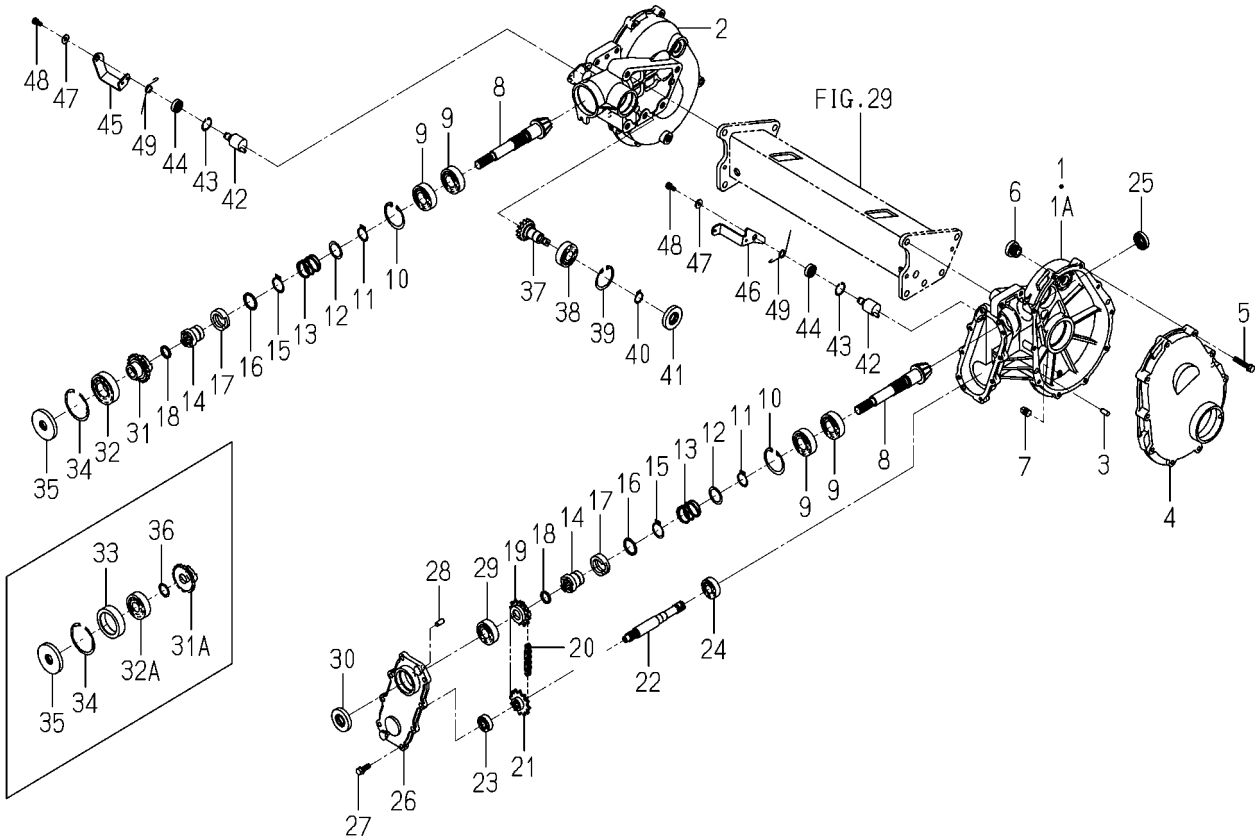


2233-330D-0100

| KEY | PART CODE | DESCRIPTION | SPC | TYPE OF MODEL NP80D E16 | | ITC | COL | GRP | REMARKS |
|---|---|---|---|---|---|---|---|---|---|
| 1 | 2232-330-001-20 | CASE/REAR/IN/LH | * | 1 -275 | | | | | |
| 1A | 2232-330-001-30 | CASE/REAR/IN/LH | * | 1 276- | | 1 | | | |
| 2 | 2232-330-002-20 | CASE/REAR/IN/RH | * | 1 | | | | | |
| 3 | V522-100-801-80 | PIN,ST,A/8X18 | * | 4 | | | | | |
| 4 | 2213-330-006-10 | CASE/REAR/OUT/8D | * | 2 | | | | | |
| 5 | V211-560-804-50 | BOLT,S/M8X45/7T | * | 20 | | | | | |
| 6 | 2157-201-004-10 | PLUG,OIL | * | 2 | | | | | |
| 7 | V781-160-000-4B | PLUG/SCREW/SEAL | * | 2 | | | | | |
| 8 | 2233-330-005-10 | GEAR/BEVEL/10/FERTIL | * | 2 | | | | | |
| 9 | 1594-221-001-00 | BEARING/BALL 6205SH2 | * | 4 | | | | | |
| 10 | V705-140-052-00 | RING,SNAP/52 C | * | 2 | | | | | |
| 11 | V704-140-025-00 | RING,SNAP/25 C | * | 2 | | | | | |
| 12 | 2232-330-033-00 | WASHER/27X36X1 | * | 2 | | | | | |
| 13 | 2232-330-053-00 | SPRING/HC033 | * | 2 | | | | | |
| 14 | 2232-330-013-10 | CLUTCH/DRIVE | * | 2 | | | | | |
| 15 | V704-140-028-00 | RING,SNAP/28 C | * | 2 | | | | | |
| 16 | 2232-330-042-00 | COLLAR/28X35X02 | * | 2 | | | | | |
| 17 | 2232-330-018-50 | COLLAR/CLUTCH | * | 2 | | | | | |
| 18 | 2232-330-032-00 | COLLAR/20X25X3.2 | * | 2 | | | | | |
| 19 | 2232-330-015-00 | SPROCKET/12/DRIVE | * | 1 | | | | | |
| 20 | 2232-330-023-00 | CHAIN/ROLLER/41X034 | * | 1 | | | | | |
| 21 | 2232-330-016-10 | SPROCKET/12/DRIVEN | * | 1 | | | | | |
| 22 | 2232-330-017-00 | SHAFT/OUTPUT/ROTOR | * | 1 | | | | | |
| 23 | V600-110-620-10 | BEARING,RB/6201 | * | 1 | | | | | |
| 24 | V600-110-620-30 | BEARING,RB/6203 | * | 1 | | | | | |
| 25 | V744-117-350-70 | SEAL,OIL/TC17357 | * | 1 | | | | | |
| 26 | 2232-330-004-00 | COVER/REAR/INPUT | * | 1 | | | | | |
| 27 | V211-260-802-50 | BOLT,S/M8X25 | * | 8 | | | | | |
| 28 | V522-100-801-80 | PIN,ST,A/8X18 | * | 2 | | | | | |
| 29 | V600-110-620-40 | BEARING,RB/6204 | * | 1 | | | | | |

# FIG. 35 CASE(REAR)SYSTEM(F TYPE EXCEPT Z)(2/2)

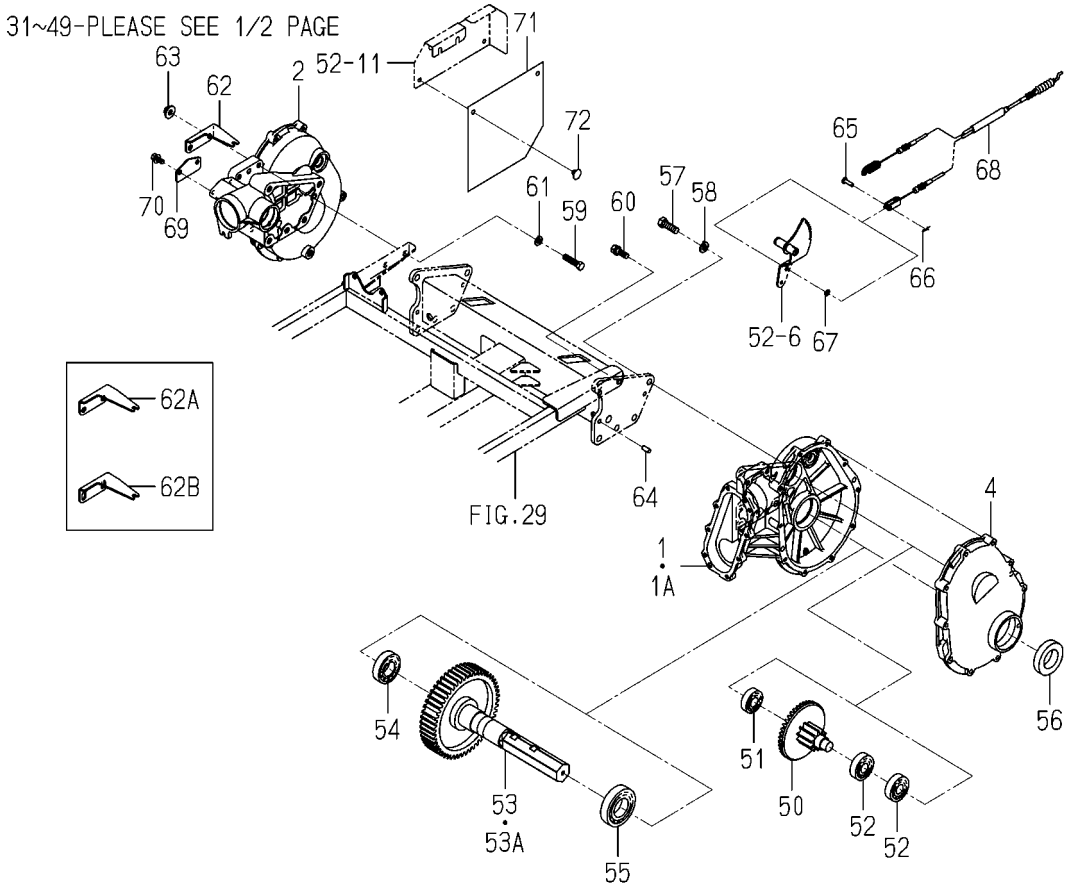


2233-330D-0100

| KEY | PART CODE | DESCRIPTION | SPC | TYPE OF MODEL NP80D E16 | | ITC | COL | GRP | REMARKS |
|---|---|---|---|---|---|---|---|---|---|
| 30 | 2161-330-004-00 | SEAL,OIL/SDD7/204 | * | 1 | | | | | |
| 31 | 2232-330-012-00 | CLUTCH/DRIVEN/FERTIL | * | 1 -80 | | | | | |
| 31A | 2233-330-053-00 | CLUTCH/DRIVEN/FERTIL | * | 1 81- | | | | | |
| 32 | V600-110-620-60 | BEARING,RB/6206 | * | 1 -80 | | | | | |
| 32A | V600-110-630-40 | BEARING,RB/6304 | * | 1 81- | | | | | |
| 33 | 2232-330-054-00 | METAL/52X62X16 | * | 1 81- | | | | | |
| 34 | V707-140-062-00 | RING,SNAP/R62 | * | 1 | | | | | |
| 35 | 2232-330-022-00 | SEAL/OIL | * | 1 | | | | | |
| 36 | 2194-419-009-00 | WASHER/20X28X01 | * | 1 81- | | | | | |
| 37 | 2232-330-039-00 | SHAFT/FERTILIZE | * | 1 | | | | | |
| 38 | V600-110-620-40 | BEARING,RB/6204 | * | 1 | | | | | |
| 39 | V705-140-047-00 | RING,SNAP/47 C | * | 1 | | | | | |
| 40 | V704-140-020-00 | RING,SNAP/20 C | * | 1 | | | | | |
| 41 | 2161-330-004-00 | SEAL,OIL/SDD7/204 | * | 1 | | | | | |
| 42 | 2232-330-220-00 | SHIFTER/FERTILIZER | * | 2 | | | | | |
| 43 | V705-140-025-00 | RING,SNAP/25 C | * | 2 | | | | | |
| 44 | V744-112-250-70 | SEAL,OIL/TC12257 | * | 2 | | | | | |
| 45 | 2232-330-041-10 | ARM/CLUCH/FERTILIZE | * | 1 | | | | | |
| 46 | 2233-330-051-00 | ARM/CLUCH/ROTOR | * | 1 | | | | | |
| 47 | 3560-503-302-00 | WASHER,WIRE TENSION | * | 2 | | | | | |
| 48 | V210-260-601-60 | BOLT,S/M6X16 | * | 2 | | | | | |
| 49 | 2232-330-043-10 | SPRING/HT015 | * | 2 | | | | | |
| 50 | 2233-330-200-10 | SHAFT/COUNTER/41-9 | * | 2 | | | | | |
| 51 | 1564-263-002-00 | BEARING,BALL | * | 2 | | | | | |
| 52 | 1560-214-003-00 | BEARING/BALL/6304SH2 | * | 4 | | | | | |
| 53 | 2233-330-230-10 | SHAFT/REAR/WHEEL/8 | * | 2 -80 | | | | | |
| 53A | 2233-330-230-20 | SHAFT/REAR/WHEEL/8 | * | 2 81- | | 1 | | | |
| 54 | V600-110-620-60 | BEARING,RB/6206 | * | 2 | | | | | |
| 55 | V600-110-620-80 | BEARING,RB/6208 | * | 2 | | | | | |
| 56 | 2162-330-007-00 | SEAL,WHEEL SHAFT | * | 2 | | | | | |

# FIG. 35 CASE(REAR)SYSTEM(F TYPE EXCEPT Z)(2/2)

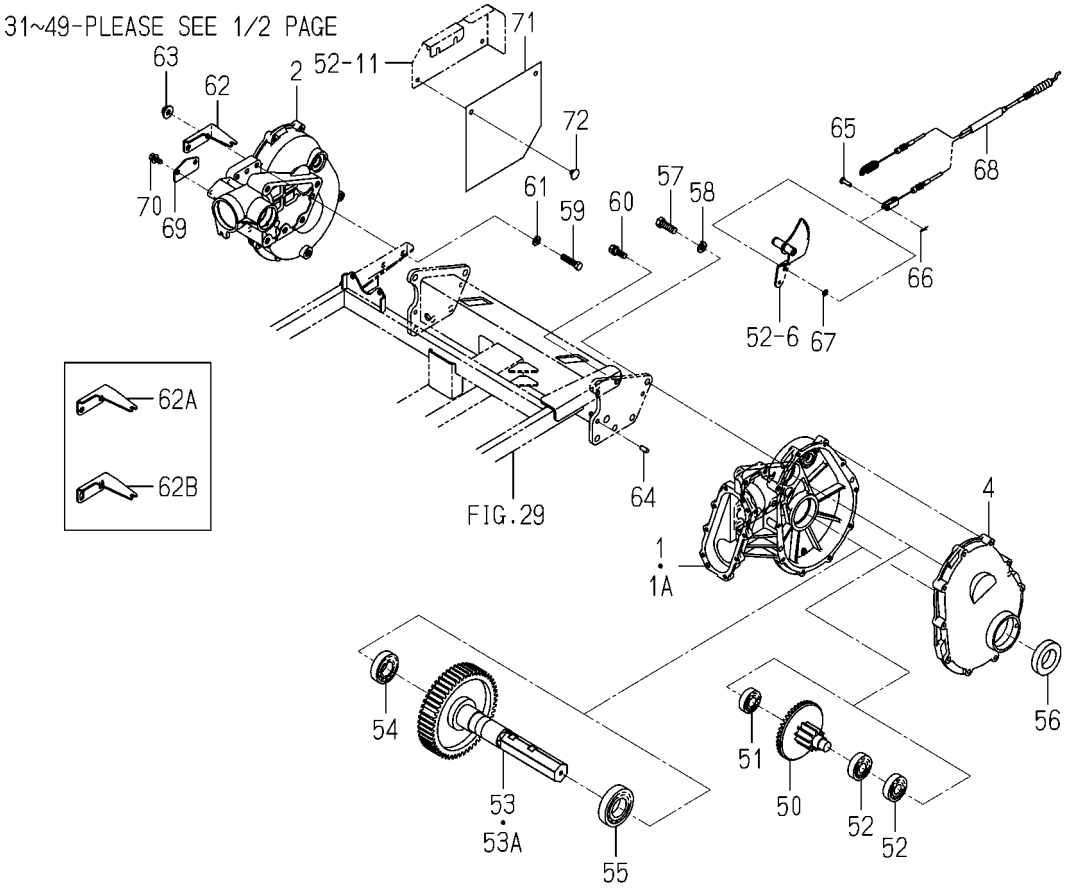


2233-330D-0100

| KEY | PART CODE | DESCRIPTION | SPC | TYPE OF MODEL NP80D E16 | | ITC | COL | GRP | REMARKS |
|---|---|---|---|---|---|---|---|---|---|
| 57 | 2232-330-045-00 | BOLT/SEAL/M12X35 | * | 10 | | | | | |
| 58 | V402-160-012-00 | WASHER,SP/M12 | * | 10 | | | | | |
| 59 | V201-361-004-0B | BOLT/M10X40/7T,SEAL | * | 3 | | | | | |
| 60 | 2204-323-011-00 | BOLT/SEAL/M10X30/S | * | 1 | | | | | |
| 61 | V401-160-010-00 | WASHER,SP/M10 | * | 3 | | | | | |
| 62 | 2233-581-001-00 | PLATE/CABLE/HOLDER | * | 1 -80 | | | | | |
| 62A | 2233-581-001-10 | PLATE/CABLE/HOLDER | * | 1 -176 | | 1 | | | |
| 62B | 2233-581-001-20 | PLATE/CABLE/HOLDER | * | 1 177- | | 1 | | | |
| 63 | V363-260-010-00 | NUT/WASHER/M10 | * | 2 | | | | | |
| 64 | V522-100-801-80 | PIN,ST,A/8X18 | * | 4 | | | | | |
| 65 | 2111-441-019-20 | PIN/2 | * | 1 | | | | | |
| 66 | 2161-735-005-00 | PIN | * | 1 | | | | | |
| 67 | V411-260-006-00 | WASHER,PL/M6 | * | 1 | | | | | |
| 68 | 2233-330-041-00 | CABLE/CLUCH/FERTILIZ | * | 1 | | | | | |
| 69 | 2232-330-052-00 | COVER/CLUTCH/FERTILI | * | 1 | | | | | |
| 70 | V211-360-802-00 | BOLT,SP/M8X20 | * | 2 | | | | | |
| 71 | 2232-422-025-00 | COVER/FERTIRIZE CLUT | * | 1 | | | | | |
| 72 | 2186-508-017-00 | CLIP,MAT/SUNSET GRAY | * | 2 | | | | | |

# FIG. 36 CASE(REAR)SYSTEM(EXCEPT Z,F TYPE)(1/2)

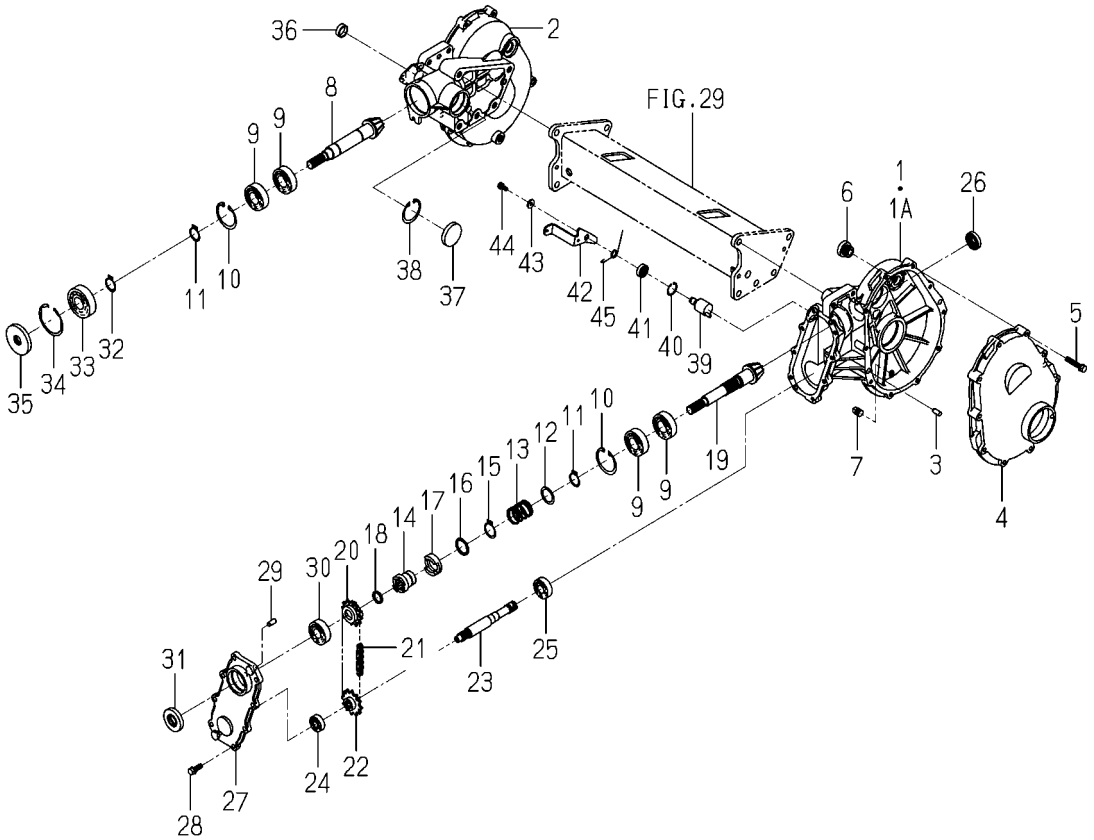


2233-330E-0100

| KEY | PART CODE | DESCRIPTION | SPC | TYPE OF MODEL NP80D E16 | | ITC | COL | GRP | REMARKS |
|---|---|---|---|---|---|---|---|---|---|
| 1 | 2232-330-001-20 | CASE/REAR/IN/LH | * | 1 -275 | | | | | |
| 1A | 2232-330-001-30 | CASE/REAR/IN/LH | * | 1 276- | | 1 | | | |
| 2 | 2232-330-002-20 | CASE/REAR/IN/RH | * | 1 | | | | | |
| 3 | V522-100-801-80 | PIN,ST,A/8X18 | * | 4 | | | | | |
| 4 | 2213-330-006-10 | CASE/REAR/OUT/8D | * | 2 | | | | | |
| 5 | V211-560-804-50 | BOLT,S/M8X45/7T | * | 20 | | | | | |
| 6 | 2157-201-004-10 | PLUG,OIL | * | 2 | | | | | |
| 7 | V781-160-000-4B | PLUG/SCREW/SEAL | * | 2 | | | | | |
| 8 | 2233-330-004-10 | GEAR/BEVEL/10/8 | * | 1 | | | | | |
| 9 | 1594-221-001-00 | BEARING/BALL 6205SH2 | * | 4 | | | | | |
| 10 | V705-140-052-00 | RING,SNAP/52 C | * | 2 | | | | | |
| 11 | V704-140-025-00 | RING,SNAP/25 C | * | 2 | | | | | |
| 12 | 2232-330-033-00 | WASHER/27X36X1 | * | 1 | | | | | |
| 13 | 2232-330-053-00 | SPRING/HC033 | * | 1 | | | | | |
| 14 | 2232-330-013-10 | CLUTCH/DRIVE | * | 1 | | | | | |
| 15 | V704-140-028-00 | RING,SNAP/28 C | * | 1 | | | | | |
| 16 | 2232-330-042-00 | COLLAR/28X35X02 | * | 1 | | | | | |
| 17 | 2232-330-018-50 | COLLAR/CLUTCH | * | 1 | | | | | |
| 18 | 2232-330-032-00 | COLLAR/20X25X3.2 | * | 1 | | | | | |
| 19 | 2233-330-005-10 | GEAR/BEVEL/10/FERTIL | * | 1 | | | | | |
| 20 | 2232-330-015-00 | SPROCKET/12/DRIVE | * | 1 | | | | | |
| 21 | 2232-330-023-00 | CHAIN/ROLLER/41X034 | * | 1 | | | | | |
| 22 | 2232-330-016-10 | SPROCKET/12/DRIVEN | * | 1 | | | | | |
| 23 | 2232-330-017-00 | SHAFT/OUTPUT/ROTOR | * | 1 | | | | | |
| 24 | V600-110-620-10 | BEARING,RB/6201 | * | 1 | | | | | |
| 25 | V600-110-620-30 | BEARING,RB/6203 | * | 1 | | | | | |
| 26 | V744-117-350-70 | SEAL,OIL/TC17357 | * | 1 | | | | | |
| 27 | 2232-330-004-00 | COVER/REAR/INPUT | * | 1 | | | | | |
| 28 | V211-260-802-50 | BOLT,S/M8X25 | * | 8 | | | | | |
| 29 | V522-100-801-80 | PIN,ST,A/8X18 | * | 2 | | | | | |

# FIG. 36 CASE(REAR)SYSTEM(EXCEPT Z,F TYPE)(2/2)

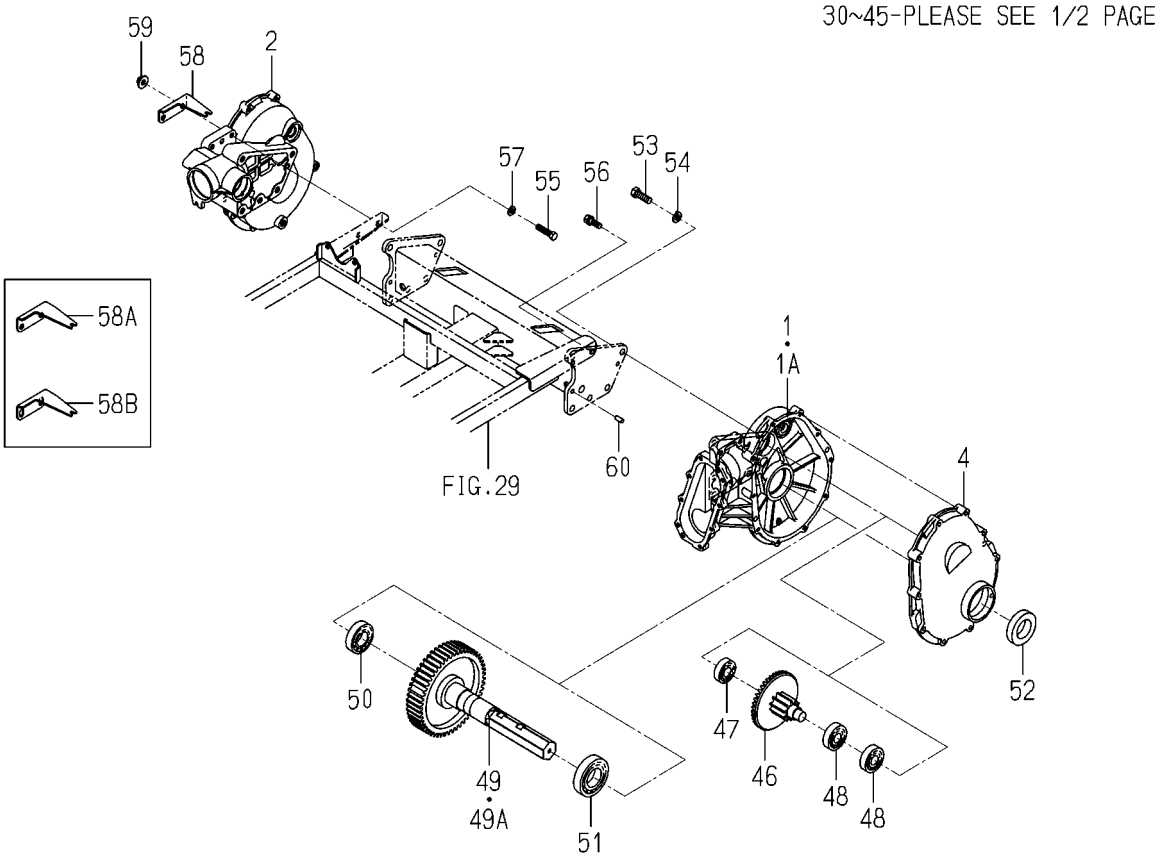


2233-330E-0100

| KEY | PART CODE | DESCRIPTION | SPC | TYPE OF MODEL NP80D E16 | | ITC | COL | GRP | REMARKS |
|---|---|---|---|---|---|---|---|---|---|
| 30 | V600-110-620-40 | BEARING,RB/6204 | * | 1 | | | | | |
| 31 | 2161-330-004-00 | SEAL,OIL/SDD7/204 | * | 1 | | | | | |
| 32 | V704-140-025-00 | RING,SNAP/25 C | * | 1 | | | | | |
| 33 | V600-110-630-50 | BEARING,RB/6305 | * | 1 | | | | | |
| 34 | V707-140-062-00 | RING,SNAP/R62 | * | 1 | | | | | |
| 35 | 2232-330-022-00 | SEAL/OIL | * | 1 | | | | | |
| 36 | 2194-419-020-00 | PLUG/25X08 | * | 1 | | | | | |
| 37 | 2194-701-010-00 | PLUG/47 | * | 1 | | | | | |
| 38 | V705-140-047-00 | RING,SNAP/47 C | * | 1 | | | | | |
| 39 | 2232-330-220-00 | SHIFTER/FERTILIZER | * | 1 | | | | | |
| 40 | V705-140-025-00 | RING,SNAP/25 C | * | 1 | | | | | |
| 41 | V744-112-250-70 | SEAL,OIL/TC12257 | * | 1 | | | | | |
| 42 | 2233-330-051-00 | ARM/CLUCH/ROTOR | * | 1 | | | | | |
| 43 | 3560-503-302-00 | WASHER,WIRE TENSION | * | 1 | | | | | |
| 44 | V210-260-601-60 | BOLT,S/M6X16 | * | 1 | | | | | |
| 45 | 2232-330-043-10 | SPRING/HT015 | * | 1 | | | | | |
| 46 | 2233-330-200-10 | SHAFT/COUNTER/41-9 | * | 2 | | | | | |
| 47 | 1564-263-002-00 | BEARING,BALL | * | 2 | | | | | |
| 48 | 1560-214-003-00 | BEARING/BALL/6304SH2 | * | 4 | | | | | |
| 49 | 2233-330-230-10 | SHAFT/REAR/WHEEL/8 | * | 2 -80 | | | | | |
| 49A | 2233-330-230-20 | SHAFT/REAR/WHEEL/8 | * | 2 81- | | 1 | | | |
| 50 | V600-110-620-60 | BEARING,RB/6206 | * | 2 | | | | | |
| 51 | V600-110-620-80 | BEARING,RB/6208 | * | 2 | | | | | |
| 52 | 2162-330-007-00 | SEAL,WHEEL SHAFT | * | 2 | | | | | |
| 53 | 2232-330-045-00 | BOLT/SEAL/M12X35 | * | 10 | | | | | |
| 54 | V402-160-012-00 | WASHER,SP/M12 | * | 10 | | | | | |
| 55 | V201-361-004-0B | BOLT/M10X40/7T,SEAL | * | 2 | | | | | |
| 56 | 2204-323-011-00 | BOLT/SEAL/M10X30/S | * | 2 | | | | | |
| 57 | V401-160-010-00 | WASHER,SP/M10 | * | 2 | | | | | |
| 58 | 2233-581-001-00 | PLATE/CABLE/HOLDER | * | 1 -80 | | | | | |

# FIG. 36 CASE(REAR)SYSTEM(EXCEPT Z,F TYPE)(2/2)

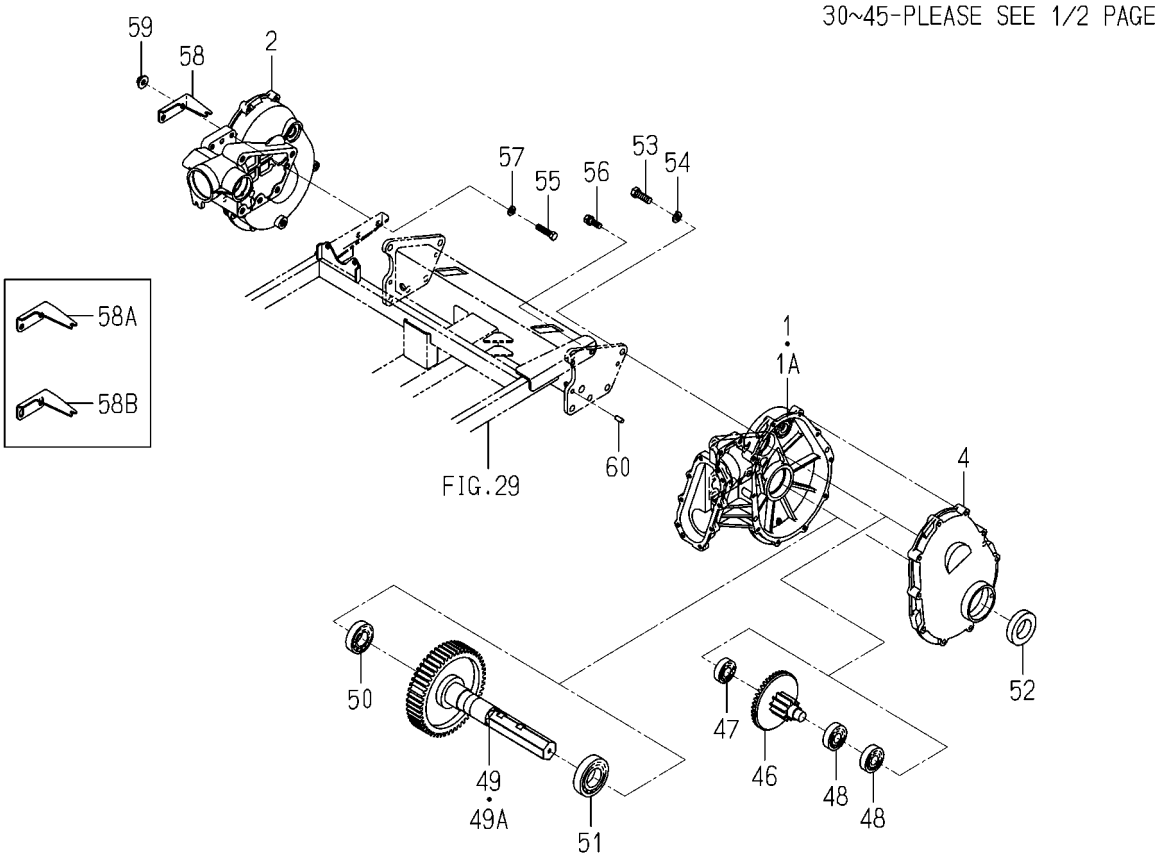


2233-330E-0100

| KEY | PART CODE | DESCRIPTION | SPC | TYPE OF MODEL NP80D E16 | | ITC | COL | GRP | REMARKS |
|---|---|---|---|---|---|---|---|---|---|
| 58A | 2233-581-001-10 | PLATE/CABLE/HOLDER | * | 1 -176 | | 1 | | | |
| 58B | 2233-581-001-20 | PLATE/CABLE/HOLDER | * | 1 177- | | 1 | | | |
| 59 | V363-260-010-00 | NUT/WASHER/M10 | * | 2 | | | | | |
| 60 | V522-100-801-80 | PIN,ST,A/8X18 | * | 4 | | | | | |

# FIG. 37 WHEEL(STEERING)SYSTEM (EXCEPT Z TYPE)

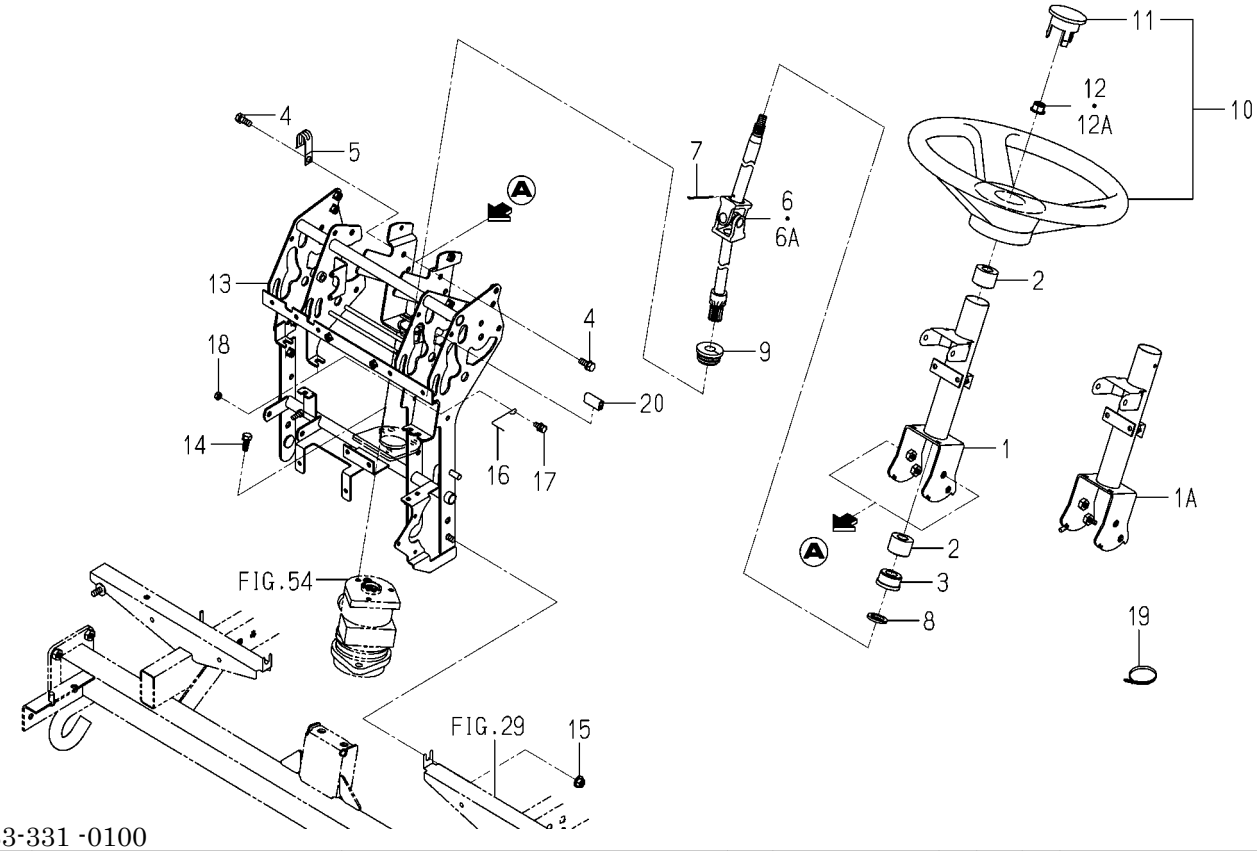


2233-331 -0100

| KEY | PART CODE | DESCRIPTION | SPC | TYPE OF MODEL NP80D E16 | | ITC | COL | GRP | REMARKS |
|---|---|---|---|---|---|---|---|---|---|
| 1 | 2232-331-250-20 | COLUMN/UPPER/NP COMP | * | 1 -175 | | | | | |
| 1A | 2232-331-250-30 | COLUMN/UPPER/NP COMP | * | 1 176- | | 1 | | | |
| 2 | 1426-406-203-00 | BUSH,COLUMN | * | 2 | | | | | |
| 3 | 2144-301-005-10 | BUSH/19X35X20 | * | 1 | | | | | |
| 4 | V211-260-802-00 | BOLT,S/M8X20 | * | 4 | | | | | |
| 5 | 1425-621-004-00 | HOLDER/JE/9-9 | * | 1 1957- | | | | | |
| 6 | 2232-331-240-10 | SHAFT/STEERING/NP | * | 1 -80 | | | | | |
| 6A | 2232-331-240-20 | SHAFT/STEERING/NP | * | 1 81- | | 1 | | | |
| 7 | V500-163-004-00 | PIN,SPLIT/3X40 | * | 1 | | | | | |
| 8 | 2151-602-006-00 | WASHER/21X32X03 | * | 1 | | | | | |
| 9 | 2204-331-008-00 | GROMMET/COLUMN | * | 1 | | | | | |
| 10 | 2232-331-300-00 | STEERING/NP ASSY | * | 1 | | | | | |
| 11 | 2232-331-302-00 | CAP | * | 1 | | | | | |
| 12 | 2188-301-006-00 | NUT/U/M12 | * | 1 -275 | | | | | |
| 12A | 2241-301-006-00 | FLANGEUNUT/M12X1.25 | * | 1 276- | | | | | |
| 13 | 2233-331-200-40 | COLUMN/LOWER/8/NP | * | 1 | | | | | |
| 14 | V211-260-801-60 | BOLT,S/M8X16 | * | 3 | | | | | |
| 15 | V362-260-008-00 | NUT/WASHER/M8 | * | 2 | | | | | |
| 16 | 2233-331-001-00 | HOOK/HOOD/REAR | * | 1 | | | | | |
| 17 | V210-360-601-60 | BOLT,SP/M6X16 | * | 1 | | | | | |
| 18 | V301-260-006-00 | NUT/M6 | * | 1 | | | | | |
| 19 | 1342-402-006-00 | BAND,WIRE/250 | * | 1 | | | | | |
| 20 | 2186-414-002-00 | PROTECTOR | * | 1 | | | | | |

# FIG. 38 WHEEL(STEERING)SYSTEM(Z TYPE)

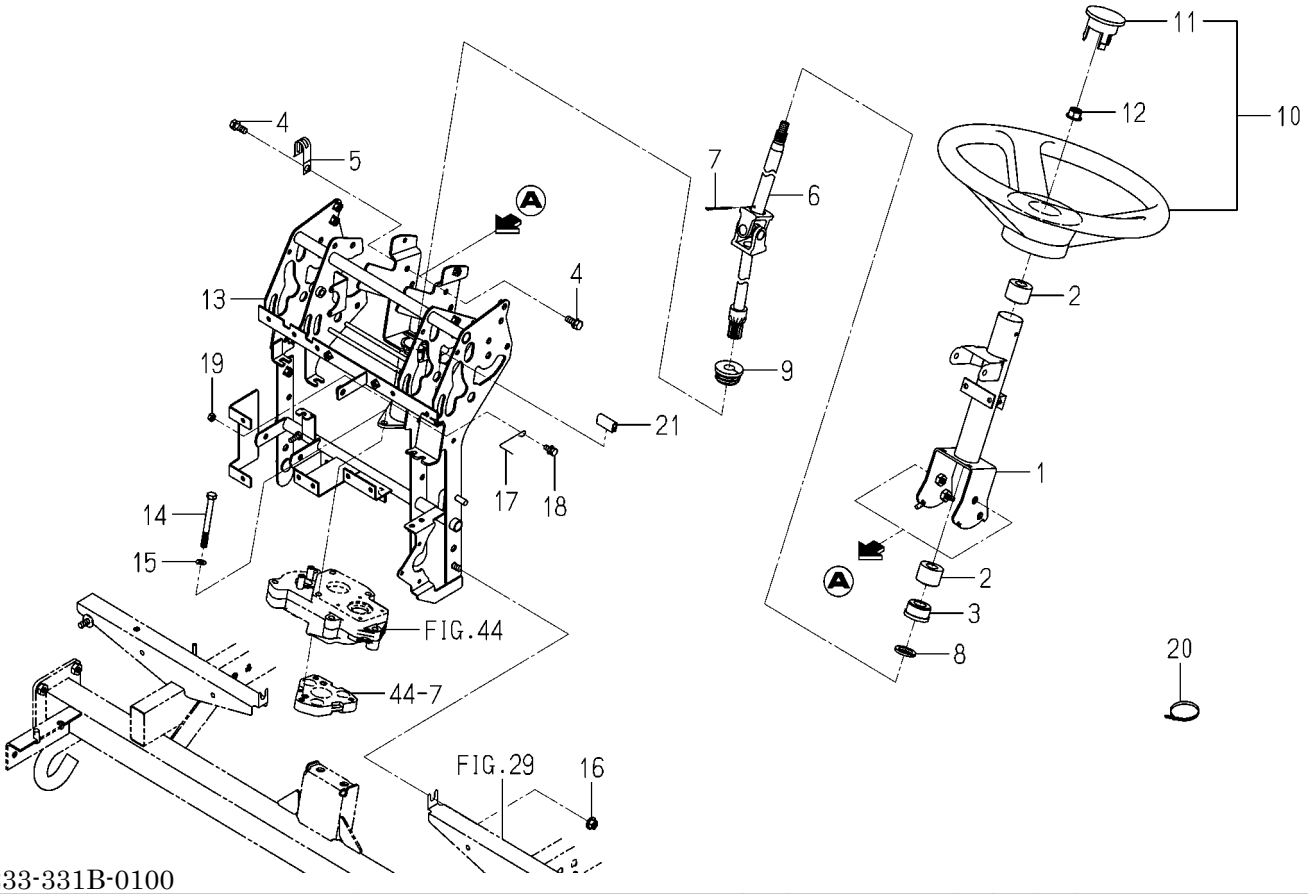


2233-331B-0100

| KEY | PART CODE | DESCRIPTION | SPC | TYPE OF MODEL NP80D E16 | | ITC | COL | GRP | REMARKS |
|---|---|---|---|---|---|---|---|---|---|
| 1 | 2232-331-250-30 | COLUMN/UPPER/NP COMP | * | 1 | | | | | |
| 2 | 1426-406-203-00 | BUSH,COLUMN | * | 2 | | | | | |
| 3 | 2144-301-005-10 | BUSH/19X35X20 | * | 1 | | | | | |
| 4 | V211-260-802-00 | BOLT,S/M8X20 | * | 4 | | | | | |
| 5 | 1425-621-004-00 | HOLDER/JE/9-9 | * | 1 | | | | | |
| 6 | 2233-360-300-00 | SHAFT/STEERING/NPZ | * | 1 | | | | | |
| 7 | V500-163-004-00 | PIN,SPLIT/3X40 | * | 1 | | | | | |
| 8 | 2151-602-006-00 | WASHER/21X32X03 | * | 1 | | | | | |
| 9 | 2204-331-008-00 | GROMMET/COLUMN | * | 1 | | | | | |
| 10 | 2232-331-300-00 | STEERING/NP ASSY | * | 1 | | | | | |
| 11 | 2232-331-302-00 | CAP | * | 1 | | | | | |
| 12 | 2241-301-006-00 | FLANGEUNUT/M12X1.25 | * | 1 | | | | | |
| 13 | 2240-331-500-10 | COLUMN/LOWER/PNP/Z | * | 1 | | | | | |
| 14 | V201-360-808-00 | BOLT/M8X80/7T | * | 3 | | | | | |
| 15 | V401-160-008-00 | WASHER,SP/M8 | * | 3 | | | | | |
| 16 | V362-260-008-00 | NUT/WASHER/M8 | * | 2 | | | | | |
| 17 | 2233-331-001-00 | HOOK/HOOD/REAR | * | 1 | | | | | |
| 18 | V210-360-601-60 | BOLT,SP/M6X16 | * | 1 | | | | | |
| 19 | V301-260-006-00 | NUT/M6 | * | 1 | | | | | |
| 20 | 1342-402-006-00 | BAND,WIRE/250 | * | 1 | | | | | |
| 21 | 2186-414-002-00 | PROTECTOR | * | 1 | | | | | |

# FIG. 39 PEDAL(BRAKE/PARKING)SYSTEM

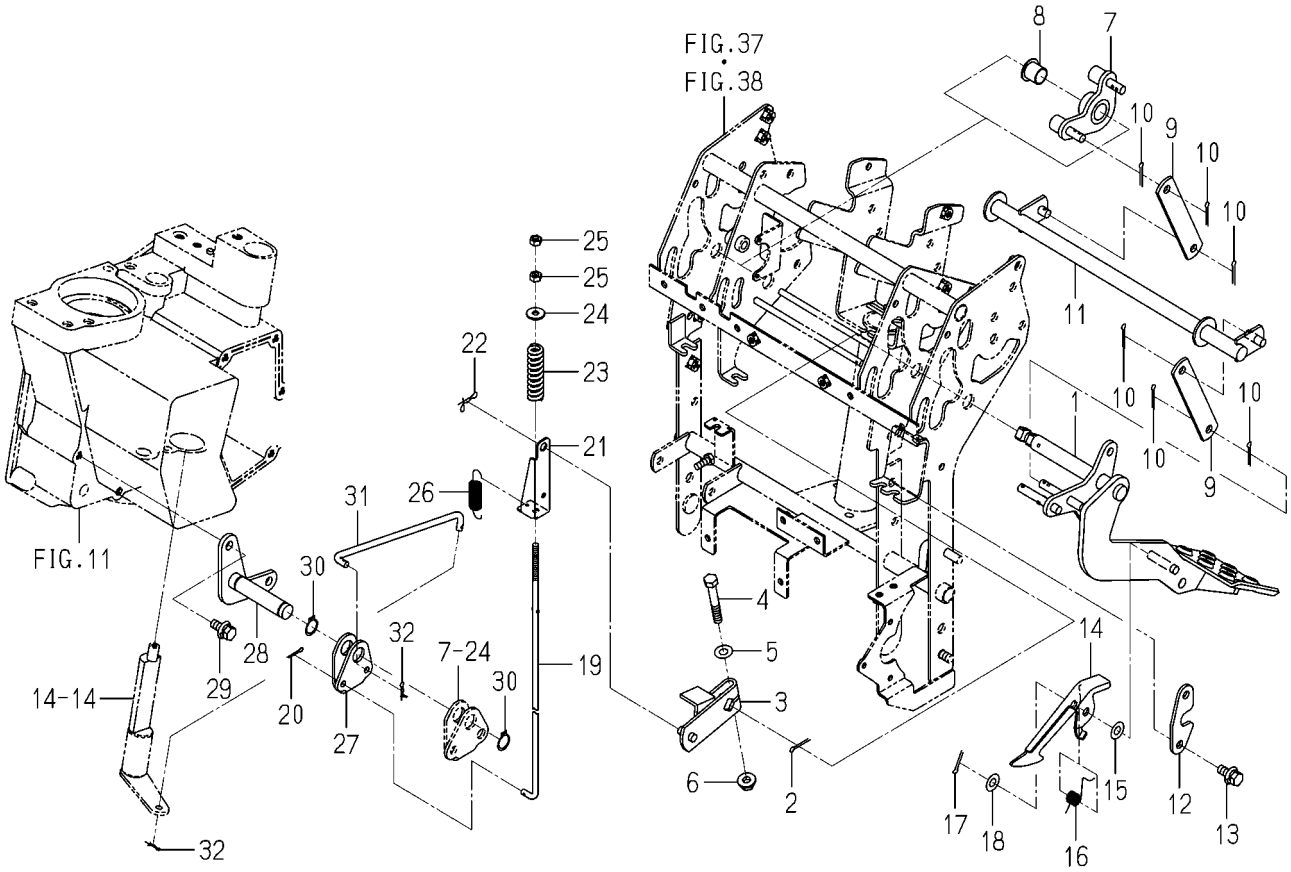


2233-336 -0100

| KEY | PART CODE | DESCRIPTION | SPC | TYPE OF MODEL NP80D E16 | | ITC | COL | GRP | REMARKS |
|---|---|---|---|---|---|---|---|---|---|
| 1 | 2233-336-200-10 | PEDAL/BRAKE/8/N COMP | * | 1 | | | | | |
| 2 | V500-163-002-00 | PIN,SPLIT/3X20 | * | 1 | | | | | |
| 3 | 2233-336-210-00 | ARM/BRAKE/8/NP COMP | * | 1 | | | | | |
| 4 | V201-260-805-00 | BOLT/M8X50 | * | 1 | | | | | |
| 5 | V411-260-008-00 | WASHER,PL/M8 | * | 1 | | | | | |
| 6 | V362-260-008-00 | NUT/WASHER/M8 | * | 1 | | | | | |
| 7 | 2233-336-220-00 | CAM/RETURN/LEVE COMP | * | 1 | | | | | |
| 8 | 3656-221-001-10 | BUSH/15X17X16 | * | 1 | | | | | |
| 9 | 2233-336-002-10 | PLATE/RETURN/LEVER | * | 2 | | | | | |
| 10 | V500-163-002-00 | PIN,SPLIT/3X20 | * | 6 | | | | | |
| 11 | 2233-336-230-00 | SHAFT/RETURN/LEVER | * | 1 | | | | | |
| 12 | 2233-336-005-00 | PLATE/HOLDER/COUNTER | * | 2 | | | | | |
| 13 | V211-360-802-00 | BOLT,SP/M8X20 | * | 4 | | | | | |
| 14 | 2213-336-003-20 | LOCK/BRAKE | * | 1 | | | | | |
| 15 | V411-260-008-00 | WASHER,PL/M8 | * | 1 | | | | | |
| 16 | 2213-336-004-00 | SPRING/HT012 | * | 1980- 1 | | | | | |
| 17 | V500-163-002-00 | PIN,SPLIT/3X20 | * | 1 | | | | | |
| 18 | V411-260-008-00 | WASHER,PL/M8 | * | 1 | | | | | |
| 19 | 2232-336-002-00 | ROD/BRAKE/UPPER/NP | * | 1 | | | | | |
| 20 | V500-162-501-50 | PIN,SPLIT/2.5X15 | * | 1 | | | | | |
| 21 | 2204-336-005-00 | PLATE/ROD | * | 1 | | | | | |
| 22 | 2161-735-006-00 | PIN/STOPPER/8 | * | 1 | | | | | |
| 23 | 2233-336-006-00 | SPRING/HC058/8 | * | 1 | | | | | |
| 24 | 3560-503-302-00 | WASHER,WIRE TENSION | * | 1 | | | | | |
| 25 | V301-260-006-00 | NUT/M6 | * | 2 | | | | | |
| 26 | 2209-518-002-10 | SPRING/HE070 | * | 1 | | | | | |
| 27 | 2232-336-001-00 | PLATE/COUNTER/BRAKE/ | * | 1 | | | | | |
| 28 | 2232-336-200-20 | BASE/COUNTER/NP COMP | * | 1 | | | | | |
| 29 | V211-360-802-00 | BOLT,SP/M8X20 | * | 2 | | | | | |
| 30 | V704-140-015-00 | RING,SNAP/15 C | * | 2 | | | | | |

# FIG. 39 PEDAL(BRAKE/PARKING)SYSTEM

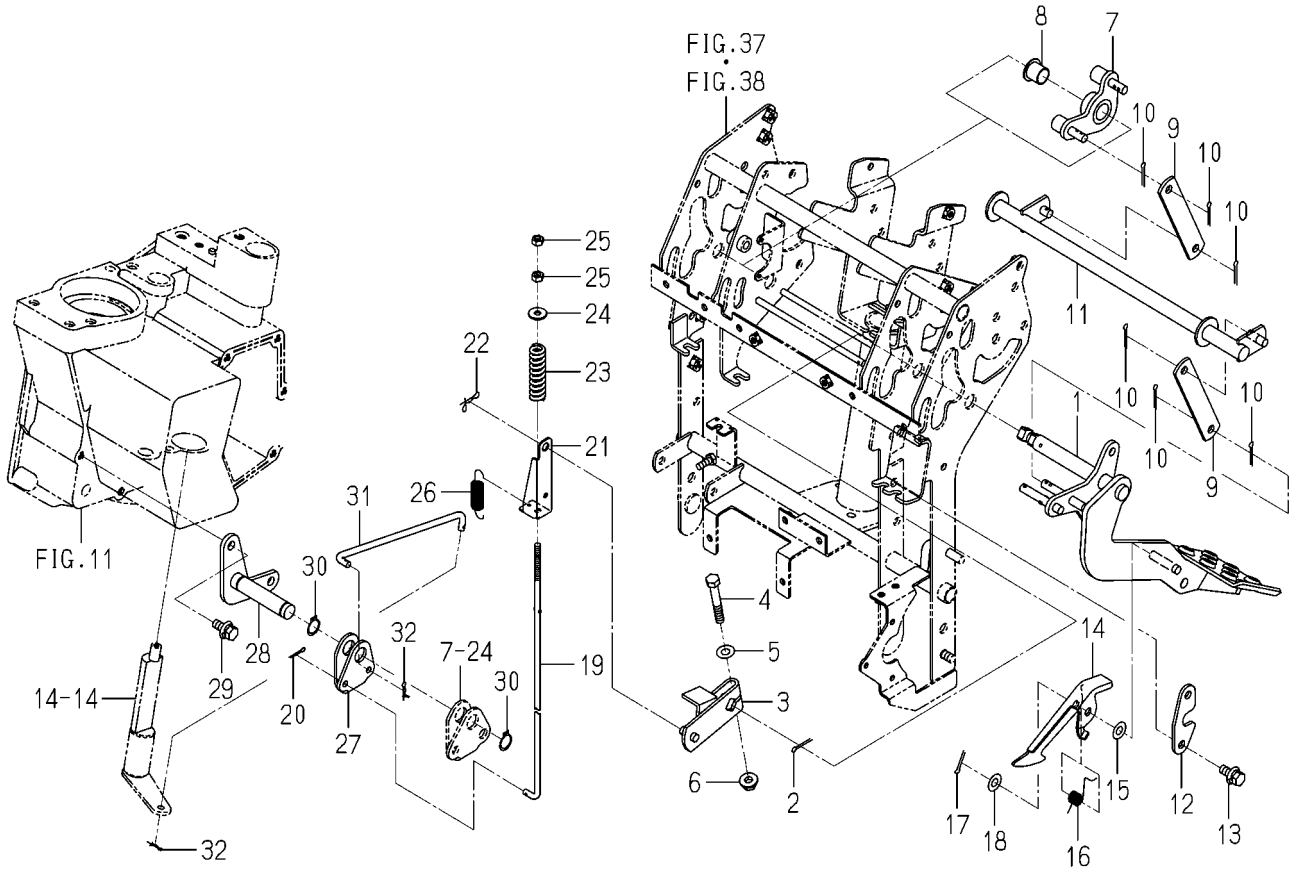


2233-336 -0100

| KEY | PART CODE | DESCRIPTION | SPC | TYPE OF MODEL NP80D E16 | | ITC | COL | GRP | REMARKS |
|---|---|---|---|---|---|---|---|---|---|
| 31 | 2232-336-003-00 | ROD/BRAKE/LOWER/NP | * | 1 | | | | | |
| 32 | V500-162-501-50 | PIN,SPLIT/2.5X15 | * | 2 | | | | | |

# FIG. 40 PEDAL(BRAKE)SYSTEM

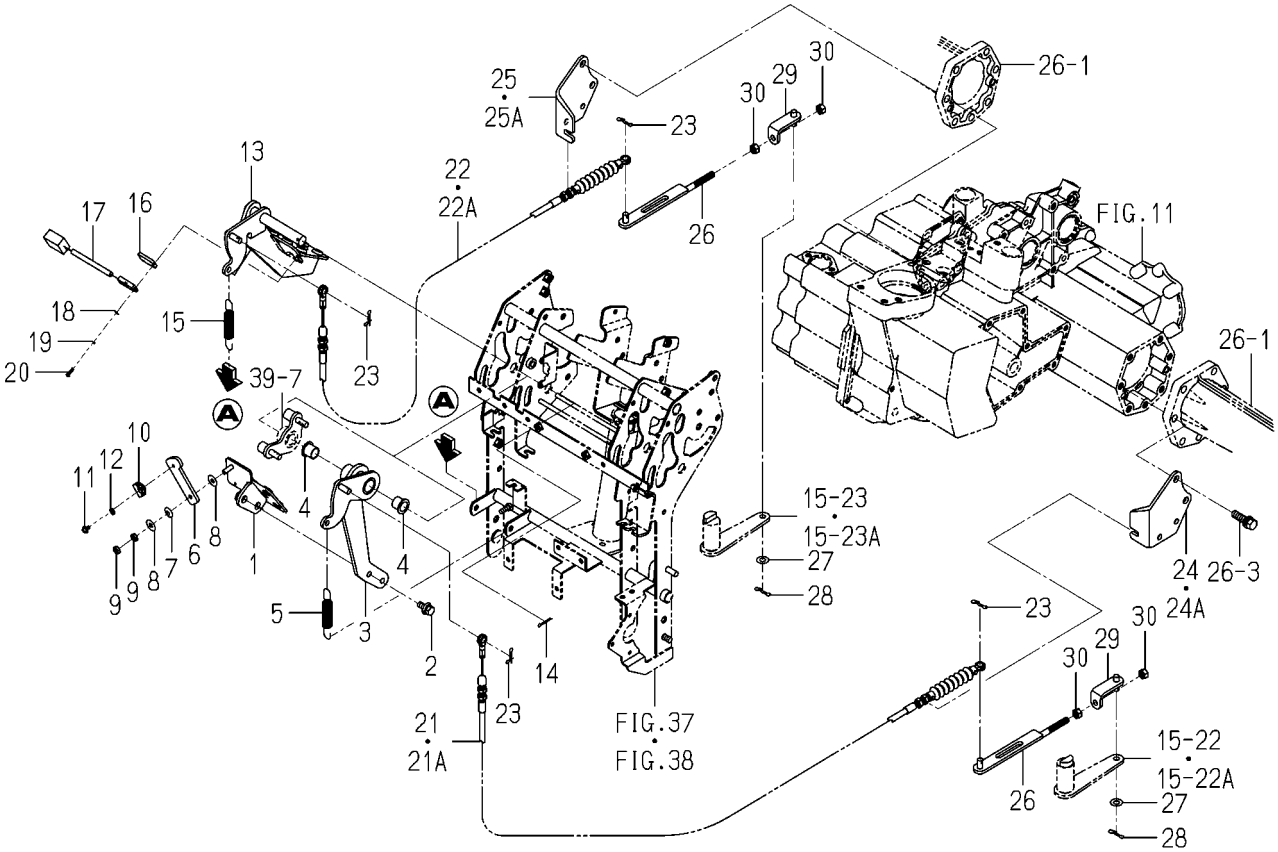


2233-337 -0100

| KEY | PART CODE | DESCRIPTION | SPC | TYPE OF MODEL NP80D E16 | | ITC | COL | GRP | REMARKS |
|---|---|---|---|---|---|---|---|---|---|
| 1 | 2233-337-210-00 | PEDAL/BRAKE/LH/NP | * | 1 | | | | | |
| 2 | V211-360-802-00 | BOLT,SP/M8X20 | * | 2 | | | | | |
| 3 | 2233-337-220-00 | ARM/BRAKE/LH/NP COMP | * | 1 | | | | | |
| 4 | 3656-221-001-10 | BUSH/15X17X16 | * | 2 | | | | | |
| 5 | 2233-337-003-00 | SPRING/HE086 | * | 1 | | | | | |
| 6 | 2233-337-004-00 | PLATE/PEDAL/CONNECT/ | * | 1 | | | | | |
| 7 | 3560-203-004-00 | SPRING,CONE | * | 1 | | | | | |
| 8 | 3560-503-302-00 | WASHER,WIRE TENSION | * | 2 | | | | | |
| 9 | V302-260-006-00 | NUT/M6 | * | 2 | | | | | |
| 10 | 2188-542-202-00 | MAGNET/BRAKE | * | 1 | | | | | |
| 11 | V120-364-001-00 | SCREW,SP/M4X10 | * | 1 | | | | | |
| 12 | V411-260-004-00 | WASHER,PL/M4 | * | 1 | | | | | |
| 13 | 2233-337-200-10 | PEDAL/BRAKE/RH/NP | * | 1 | | | | | |
| 14 | V500-163-002-00 | PIN,SPLIT/3X20 | * | 1 | | | | | |
| 15 | 2233-337-003-00 | SPRING/HE086 | * | 1 | | | | | |
| 16 | 2188-542-003-00 | SPACER,BRAKE SENSOR | * | 1 | | | | | |
| 17 | 2186-537-110-00 | SENSOR ASSY | * | 1 | | | | | |
| 18 | V411-260-003-00 | WASHER,PL/M3 | * | 2 | | | | | |
| 19 | V401-160-003-00 | WASHER,SP/M3 | * | 2 | | | | | |
| 20 | V111-163-001-20 | SCREW/M3X12 | * | 2 | | | | | |
| 21 | 2233-337-001-10 | CABLE/BRAKE/LH/NP | * | 1 -80 | | | | | |
| 21A | 2233-337-001-20 | CABLE/BRAKE/LH/NP | * | 1 81- | | 1 | | | |
| 22 | 2233-337-002-10 | CABLE/BRAKE/RH/NP | * | 1 -80 | | | | | |
| 22A | 2233-337-002-20 | CABLE/BRAKE/RH/NP | * | 1 81- | | 1 | | | |
| 23 | 2161-735-006-00 | PIN/STOPPER/8 | * | 4 | | | | | |
| 24 | 2233-337-005-10 | PLATE/BRAKE/OUTER/LH | * | 1 -80 | | | | | |
| 24A | 2233-337-005-20 | PLATE/BRAKE/OUTER/LH | * | 1 81- | | 3 | | | |
| 25 | 2233-337-006-10 | PLATE/BRAKE/OUTER/RH | * | 1 -80 | | | | | |
| 25A | 2233-337-006-20 | PLATE/BRAKE/OUTER/RH | * | 1 81- | | 3 | | | |
| 26 | 2233-337-230-00 | PLATE/BRAKE/CONNECT | * | 2 | | | | | |

# FIG. 40 PEDAL(BRAKE)SYSTEM

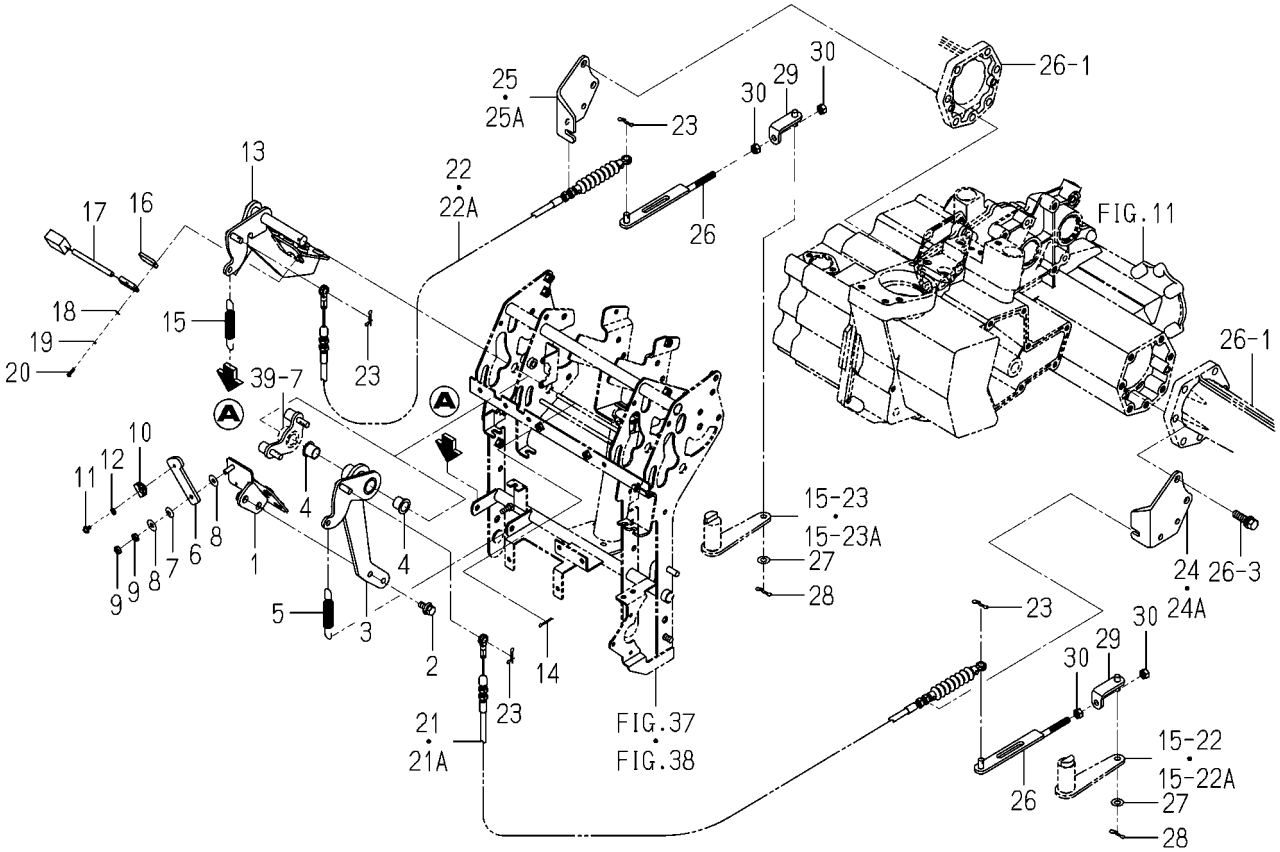


2233-337 -0100

| KEY | PART CODE | DESCRIPTION | SPC | TYPE OF MODEL NP80D E16 | | ITC | COL | GRP | REMARKS |
|---|---|---|---|---|---|---|---|---|---|
| 27 | V411-260-008-00 | WASHER,PL/M8 | * | 2 | | | | | |
| 28 | 2161-735-006-00 | PIN/STOPPER/8 | * | 2 | | | | | |
| 29 | 2233-337-240-00 | PLATE/L/25X50 COMP | * | 2 | | | | | |
| 30 | V304-260-008-00 | NUT/M8 | * | 4 | | | | | |

# FIG. 41 WEIGHT(11KG)SYSTEM

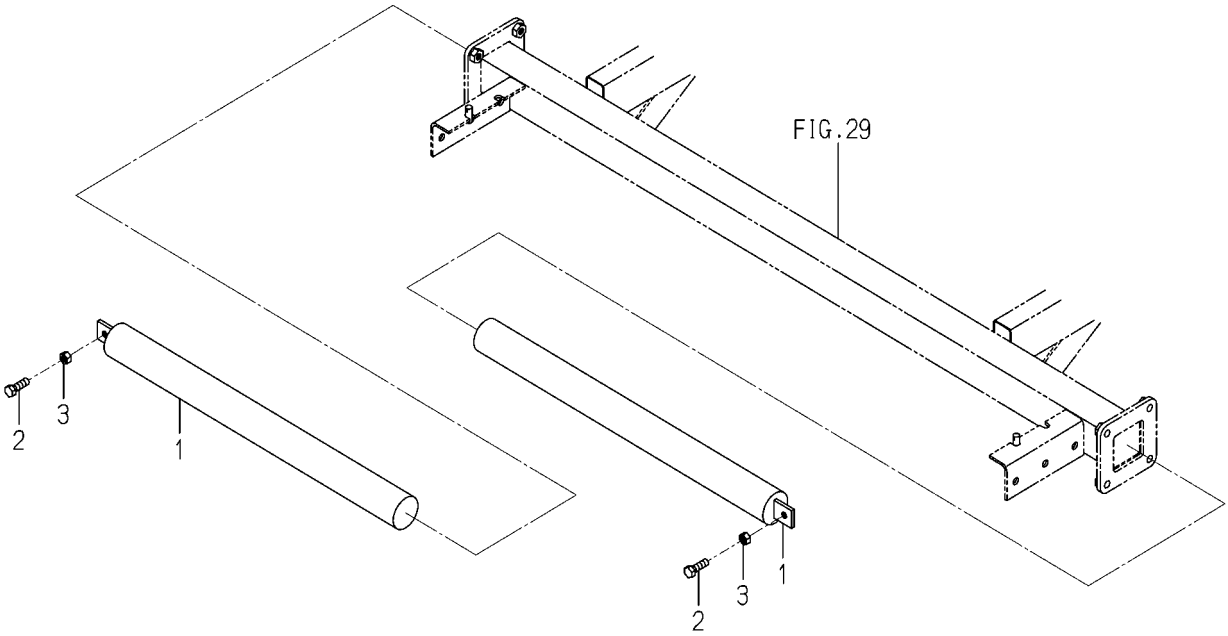


2232-340A-0100

| KEY | PART CODE | DESCRIPTION | SPC | TYPE OF MODEL NP80D | TYPE OF MODEL E16 | ITC | COL | GRP | REMARKS |
|---|---|---|---|---|---|---|---|---|---|
| 1 | 2232-340-200-10 | BARWEIGHT/11G COMP | * | 2 | | | | | |
| 2 | V201-260-802-50 | BOLT/M8X25 | * | 2 | | | | | |
| 3 | V304-260-008-00 | NUT/M8 | * | 2 | | | | | |

# FIG. 42 BUMPER SYSTEM(EXCEPT Z TYPE)

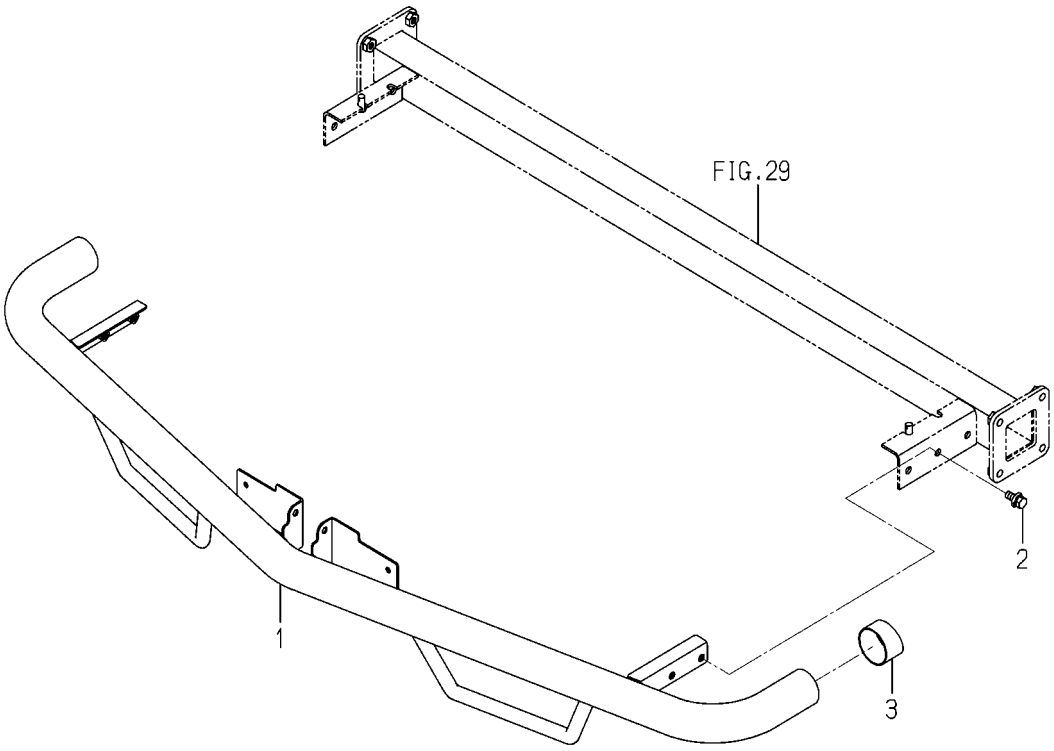


2232-343 -0100

| KEY | PART CODE | DESCRIPTION | SPC | TYPE OF MODEL NP80D E16 | | ITC | COL | GRP | REMARKS |
|---|---|---|---|---|---|---|---|---|---|
| 1 | 2232-343-200-20 | BUMPER/NP COMP | * | 1 | | | 5N | | |
| 2 | V211-360-802-00 | BOLT,SP/M8X20 | * | 4 | | | | | |
| 3 | 2204-343-001-00 | CAP/BUMPER | * | 2 | | | | | |

# FIG. 43 BUMPER SYSTEM

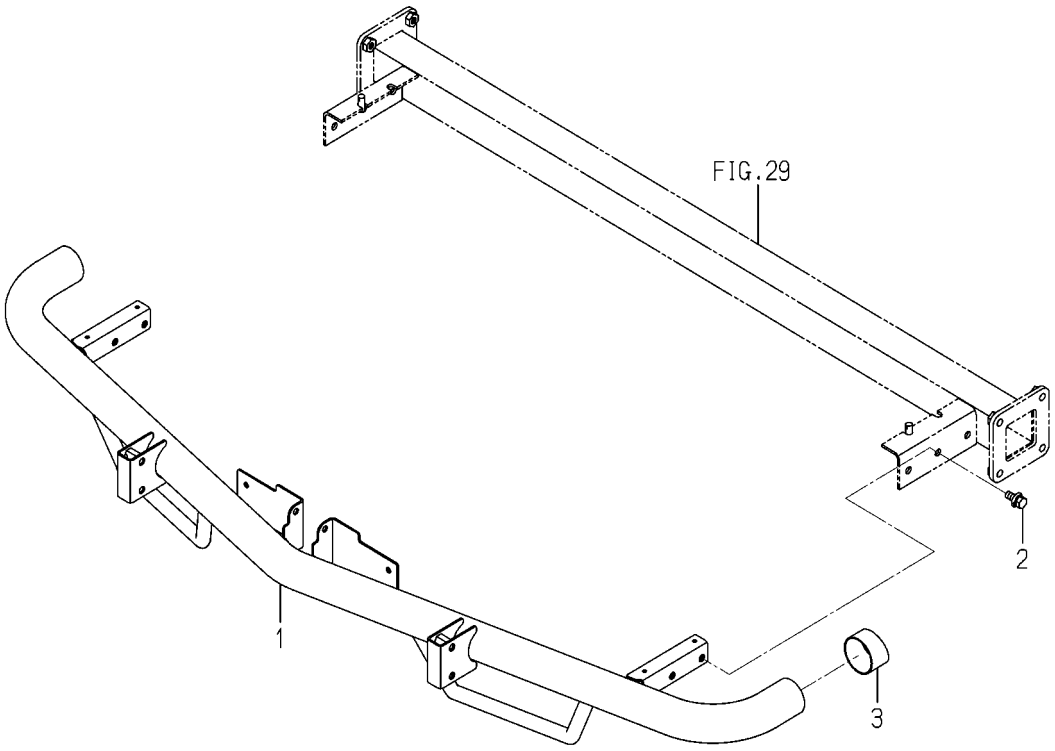


2233-343A-0100

| KEY | PART CODE | DESCRIPTION | SPC | TYPE OF MODEL NP80D E16 | | ITC | COL | GRP | REMARKS |
|---|---|---|---|---|---|---|---|---|---|
| 1 | 2233-343-400-00 | BUMPER/NP/Z COMP | * | 1 | | | | | |
| 2 | V211-360-802-00 | BOLT,SP/M8X20 | * | 4 | | | | | |
| 3 | 2204-343-001-00 | CAP/BUMPER | * | 2 | | | | | |

# FIG. 44 MOTOR(DRIVE/UNIT)SYSTEM(Z TYPE)

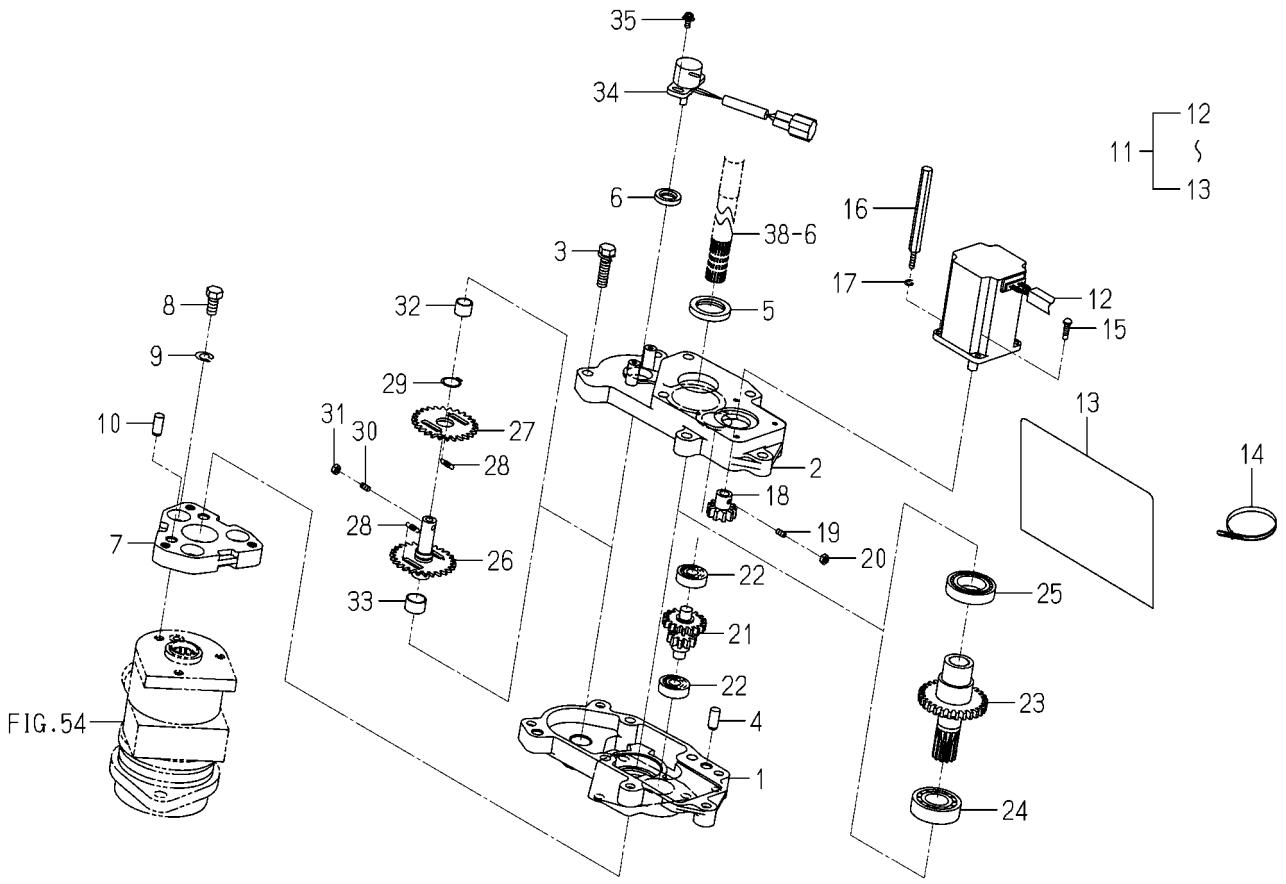


2233-360 -0100

| KEY | PART CODE | DESCRIPTION | SPC | TYPE OF MODEL NP80D E16 | | ITC | COL | GRP | REMARKS |
|---|---|---|---|---|---|---|---|---|---|
| 1 | 2233-360-004-00 | CASE/LOWER/STEARING | * | 1 | | | | | |
| 2 | 2233-360-005-00 | CASE/UPPER/STEARING | * | 1 | | | | | |
| 3 | V211-560-803-00 | BOLT,S/M8X30/7T | * | 5 | | | | | |
| 4 | V522-100-801-80 | PIN,ST,A/8X18 | * | 2 | | | | | |
| 5 | V742-125-350-50 | SEAL,OIL/VC25355 | * | 1 | | | | | |
| 6 | V742-112-220-40 | SEAL,OIL/VC12224 | * | 1 | | | | | |
| 7 | 2233-360-009-00 | SPACER/STEARING | * | 1 | | | | | |
| 8 | V201-360-801-60 | BOLT/M8X16/7T | * | 3 | | | | | |
| 9 | V401-160-008-00 | WASHER,SP/M8 | * | 3 | | | | | |
| 10 | V522-100-801-80 | PIN,ST,A/8X18 | * | 2 | | | | | |
| 11 | 2233-360-550-20 | MOTOR/ASIST ASSY | * | 1 | | | | | |
| 12 | 2233-360-551-00 | MOTOR | * | 1 | | | | | |
| 13 | 2233-360-553-00 | COVER/MOTOR | * | 1 | | | | | |
| 14 | 1342-402-006-00 | BAND,WIRE/250 | * | 1 | | | | | |
| 15 | V120-264-001-60 | SCREW,SEMS/M4X16 | * | 3 | | | | | |
| 16 | 2233-360-016-00 | BOLT/MOTOR/M4X16 | * | 1 | | | | | |
| 17 | V401-160-004-00 | WASHER,SP/M4 | * | 1 | | | | | |
| 18 | 2233-360-001-00 | GEAR/SPUR/10 | * | 1 | | | | | |
| 19 | 2233-360-015-00 | SCREW,SET/HEX.SOCKET | * | 1 | | | | | |
| 20 | V301-260-004-00 | NUT/M4 | * | 1 | | | | | |
| 21 | 2233-360-002-00 | GEARSPAR/10-17 | * | 1 | | | | | |
| 22 | V600-110-600-00 | BEARING,RB/6000 | * | 2 | | | | | |
| 23 | 2233-360-200-00 | GEAR/SPUR/28 COMP | * | 1 | | | | | |
| 24 | V600-110-600-40 | BEARING,RB/6004 | * | 1 | | | | | |
| 25 | V600-110-690-50 | BEARING,RB/6905 | * | 1 | | | | | |
| 26 | 2233-360-510-00 | GEAR/SENSOR COMP | * | 1 | | | | | |
| 27 | 2233-360-008-00 | GEAR/SENSOR/B | * | 1 | | | | | |
| 28 | 2233-360-006-00 | SPRING/HE15 | * | 2 | | | | | |
| 29 | V704-140-015-00 | RING,SNAP/15 C | * | 1 | | | | | |
| 30 | 2233-360-015-00 | SCREW,SET/HEX.SOCKET | * | 1 | | | | | |

# FIG. 44 MOTOR(DRIVE/UNIT)SYSTEM(Z TYPE)

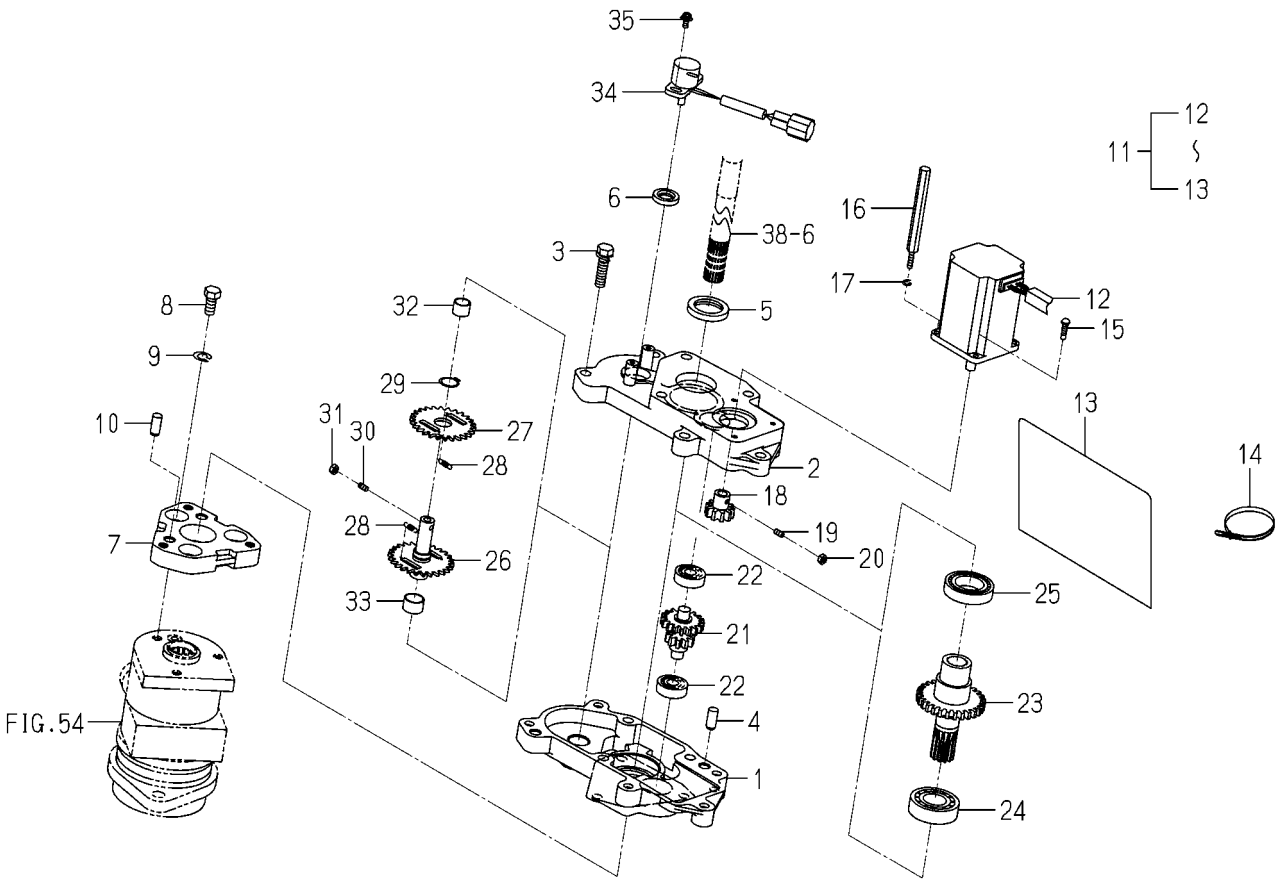


2233-360 -0100

| KEY | PART CODE | DESCRIPTION | SPC | TYPE OF MODEL NP80D E16 | | ITC | COL | GRP | REMARKS |
|---|---|---|---|---|---|---|---|---|---|
| 31 | V301-260-004-00 | NUT/M4 | * | 1 | | | | | |
| 32 | 3872-725-006-00 | BUSH/12X14X10 | * | 1 | | | | | |
| 33 | 2233-360-007-00 | BUSH/15X17X10 | * | 1 | | | | | |
| 34 | 2232-556-230-00 | SENSOR/ANGLE/330 | * | 1 | | | | | |
| 35 | V120-364-001-00 | SCREW,SP/M4X10 | * | 2 | | | | | |

# FIG. 45 PUMP SYSTEM(Z TYPE)

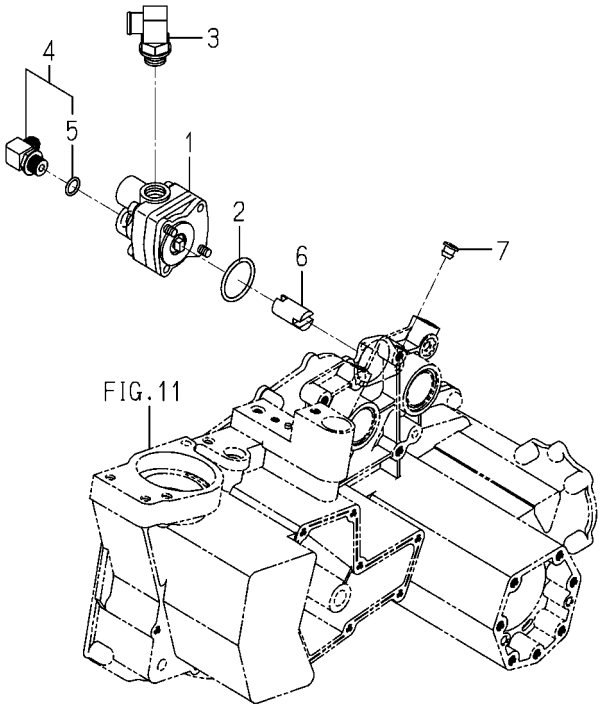


2232-401 -0100

| KEY | PART CODE | DESCRIPTION | SPC | TYPE OF MODEL NP80D E16 | | ITC | COL | GRP | REMARKS |
|---|---|---|---|---|---|---|---|---|---|
| 1 | 2204-401-200-00 | PUMP/PZ | * | 1 | | | | | |
| 2 | V720-103-503-90 | O-RING/1A,P39 | * | 1 | | | | | |
| 3 | 2186-401-001-10 | ADAPTER/90 G1/2 ASSY | * | 1 | | | | | |
| 4 | 3805-354-280-00 | ADAPTOR/G3/8XM16ASSY | * | 1 | | | | | |
| 5 | V720-112-401-40 | O-RING/1B,P14 | * | 1 | | | | | |
| 6 | 2232-401-001-00 | COUPLING/PUMP | * | 1 | | | | | |
| 7 | 2186-738-038-20 | CAP/10 | * | 1 | | | | | |

# FIG. 46 CYLINDER SYSTEM

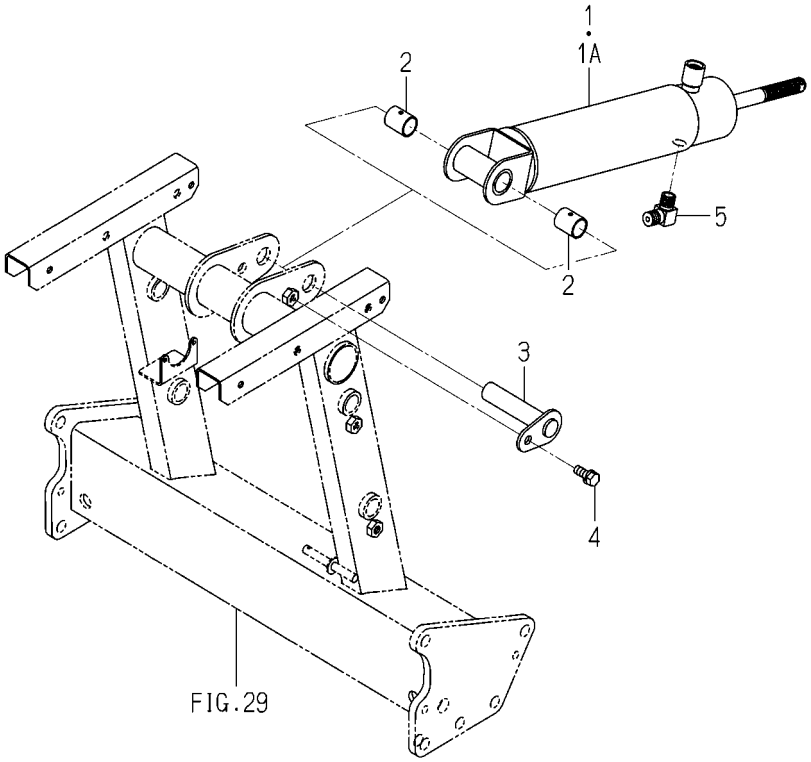


2233-407 -0100

| KEY | PART CODE | DESCRIPTION | SPC | TYPE OF MODEL NP80D E16 | | ITC | COL | GRP | REMARKS |
|---|---|---|---|---|---|---|---|---|---|
| 1 | 2233-407-200-20 | CYLINDER/8 COMP | * | 1 -80 | | | | | |
| 1A | 2233-407-200-30 | CYLINDER/8 COMP | * | 1 81- | | 1 | | | |
| 2 | P112-711-201-00 | BUSH/18X21X25 | * | 2 | | | | | |
| 3 | 2232-407-210-00 | PIN/18X83 COMP | * | 1 | | | | | |
| 4 | V211-260-802-00 | BOLT,S/M8X20 | * | 1 | | | | | |
| 5 | 3768-185-022-10 | ADAPTER/90DEG/PUMP | * | 1 | | | | | |

# FIG. 47 PIPING SYSTEM(1/2)

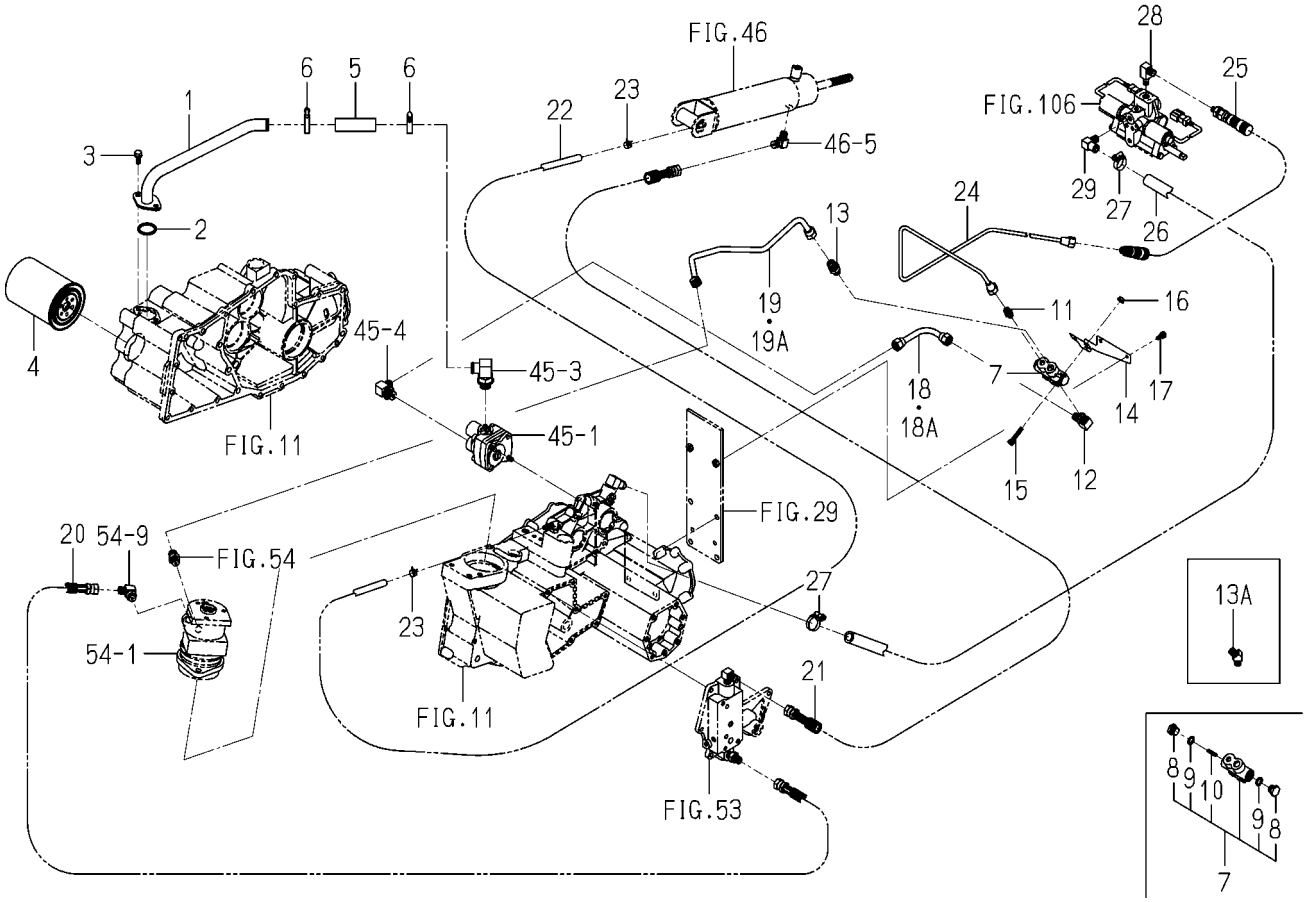


2233-409 -0100

| KEY | PART CODE | DESCRIPTION | SPC | TYPE OF MODEL NP80D E16 | | ITC | COL | GRP | REMARKS |
|---|---|---|---|---|---|---|---|---|---|
| 1 | 2232-409-200-00 | ADAPTER/SUCTION COMP | * | 1 | | | | | |
| 2 | V720-103-503-00 | O-RING/1A,P30 | * | 1 | | | | | |
| 3 | V211-260-802-00 | BOLT,S/M8X20 | * | 2 | | | | | |
| 4 | 2232-409-007-10 | CARTRIDGE | * | 1 | | | | | |
| 5 | 1725-508-001-00 | HOSE/19X25X80 | * | 1 | | | | | |
| 6 | J061-120-032-00 | CLAMP/WORM/20-32 | * | 2 | | | | | |
| 7 | K233-007-000-10 | VALVE,CONTROL | * | 1 | | | | | |
| 8 | K116-005-104-00 | PLUG | * | 2 | | | | | |
| 9 | V720-102-401-20 | O-RING/1A,P12 | * | 2 | | | | | |
| 10 | K211-035-005-00 | SPRING/HC026 | * | 1 | | | | | |
| 11 | 2186-409-036-00 | ADAPTER | * | 1 | | | | | |
| 12 | 3805-352-002-00 | ADAPTER/0-/R1/4XM16 | * | 1 | | | | | |
| 13 | 1716-510-004-00 | ADAPTER/RC1/4 | * | 1 -80 | | | | | |
| 13A | 3631-350-201-10 | ADAPTER/45DEG | * | 1 81- | | | | | |
| 14 | 2233-409-014-10 | STAY/BRANCHVALVE | * | 1 | | | | | |
| 15 | V210-260-603-50 | BOLT,S/M6X35 | * | 2 | | | | | |
| 16 | V360-260-006-00 | NUT/WASHER/M6 | * | 2 | | | | | |
| 17 | V210-260-601-60 | BOLT,S/M6X16 | * | 2 | | | | | |
| 18 | 2233-409-012-00 | PIPING/PUMP/VALVE/8 | * | 1 -80 | | | | | |
| 18A | 2233-409-012-10 | PIPING/PUMP/VALVE/8 | * | 1 81- | | 1 | | | |
| 19 | 2233-409-013-00 | PIPING/VALVE/POWERST | * | 1 -80 | | | | | |
| 19A | 1734-407-210-20 | HOSE/425 ASSY | * | 1 81- | | | | | |
| 20 | 3676-374-310-00 | HOSE,HYDRAULIC/750 A | * | 1 | | | | | |
| 21 | 3650-375-200-00 | HOSE/HYDRAULIC/2150 | * | 1 | | | | | |
| 22 | 2232-409-004-10 | HOSE(8X12X1600) | * | 1 | | | | | |
| 23 | J062-119-126-00 | CLIP/HOSE/11.9-12.6 | * | 2 | | | | | |
| 24 | 2233-409-003-10 | PIPING/VALVE/ROLLING | * | 1 | | | | | |
| 25 | 2186-409-033-00 | HOSE | * | 1 | | | | | |
| 26 | 2233-409-009-00 | HOSE/14X22X2500 | * | 1 | | | | | |
| 27 | J061-116-025-00 | CLAMP/WORM/16-25 | * | 2 | | | | | |

# FIG. 47 PIPING SYSTEM(2/2)

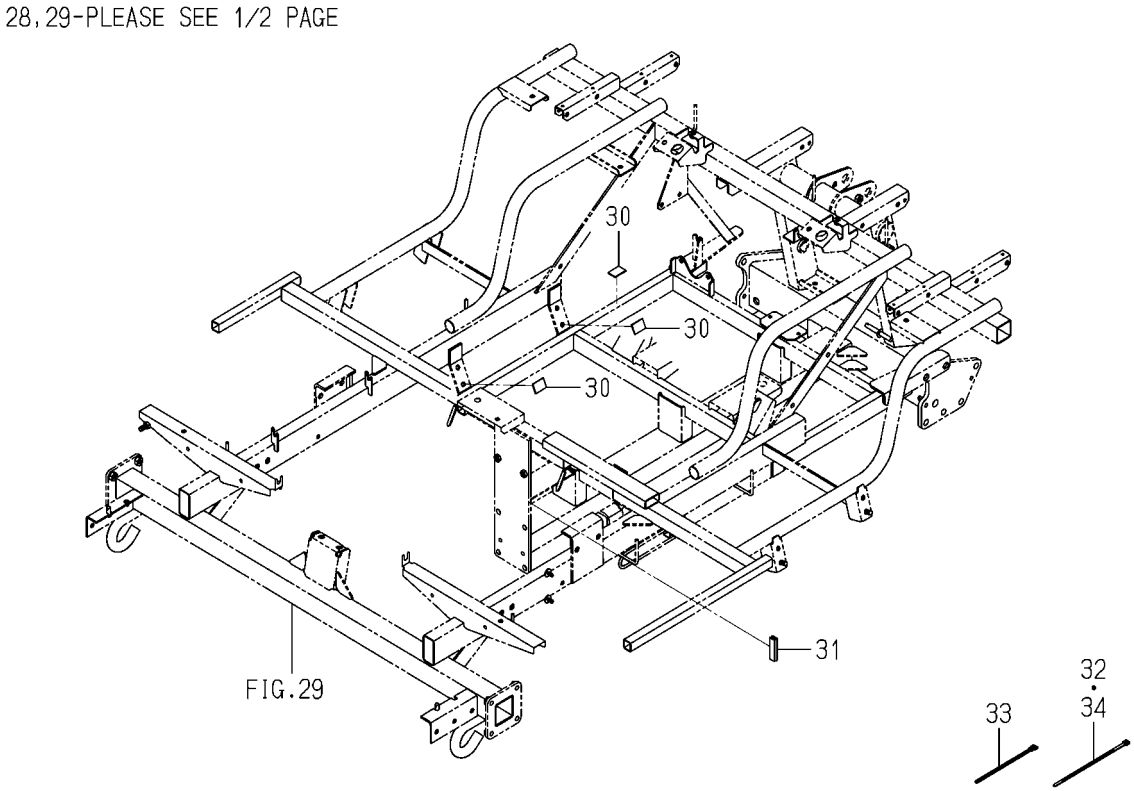


2233-409 -0100

| KEY | PART CODE | DESCRIPTION | SPC | TYPE OF MODEL NP80D E16 | | ITC | COL | GRP | REMARKS |
|---|---|---|---|---|---|---|---|---|---|
| 28 | 1716-506-001-00 | ADAPTER/L/R1/8 | * | 1 | | | | | |
| 29 | 2161-435-002-00 | ADAPTER(1/4) RETURN | * | 1 | | | | | |
| 30 | 4132-303-004-00 | PLATE,RUBBER/20X30X0 | * | 3 | | | | | |
| 31 | 3650-201-006-00 | PROTECTOR,ENGINE | * | 1 | | | | | |
| 32 | 1342-402-006-00 | BAND,WIRE/250 | * | 2 | | | | | |
| 33 | 1421-621-038-00 | BAND,WIRE/170 | * | 2 | | | | | |
| 34 | 1376-402-003-00 | BAND,WIRE/140 | * | 2 | | | | | |

# FIG. 48 ARM(CYLINDER)SYSTEM

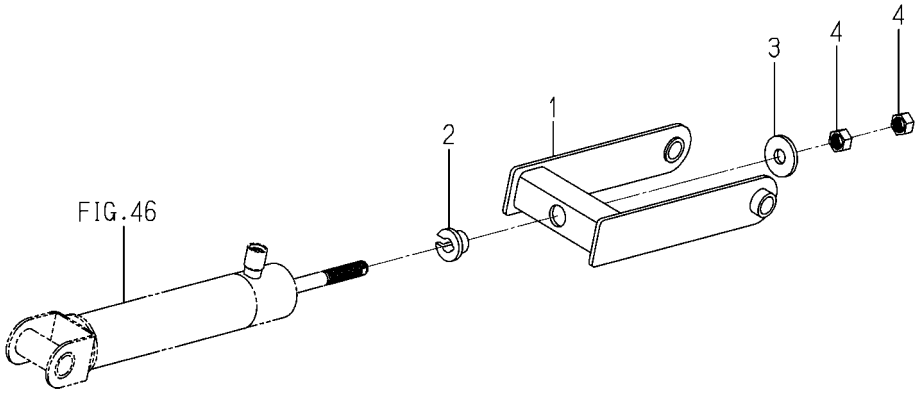


2232-411D-0100

| KEY | PART CODE | DESCRIPTION | SPC | TYPE OF MODEL NP80D E16 | | ITC | COL | GRP | REMARKS |
|---|---|---|---|---|---|---|---|---|---|
| 1 | 2232-411-300-00 | ARM/CYLINDER/6D COMP | * | 1 | | | | | |
| 2 | 2204-411-001-00 | BUSH | * | 1 | | | | | |
| 3 | 2232-411-001-00 | WASHER/15X40X05 | * | 1 | | | | | |
| 4 | V304-260-014-00 | NUT/M14 | * | 2 | | | | | |

# FIG. 49 ACCUMULATOR SYSTEM

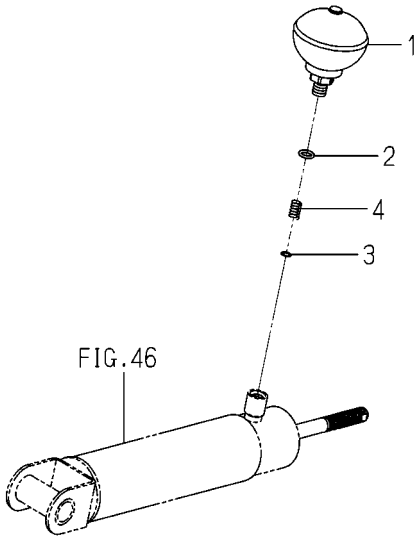


2213-413M-0100

| KEY | PART CODE | DESCRIPTION | SPC | TYPE OF MODEL NP80D E16 | | ITC | COL | GRP | REMARKS |
|---|---|---|---|---|---|---|---|---|---|
| 1 | 2213-413-300-00 | ACCUMULATOR ASSY | * | 1 | | | | | |
| 2 | V720-112-401-10 | O-RING/1B,P11 | * | 1 | | | | | |
| 3 | 2213-413-001-10 | WASHER/09X11X1.6 | * | 1 | | | | | |
| 4 | K270-012-103-00 | SPRING/HC017 | * | 1 | | | | | |

# FIG. 50 LINK(LOWER)SYSTEM

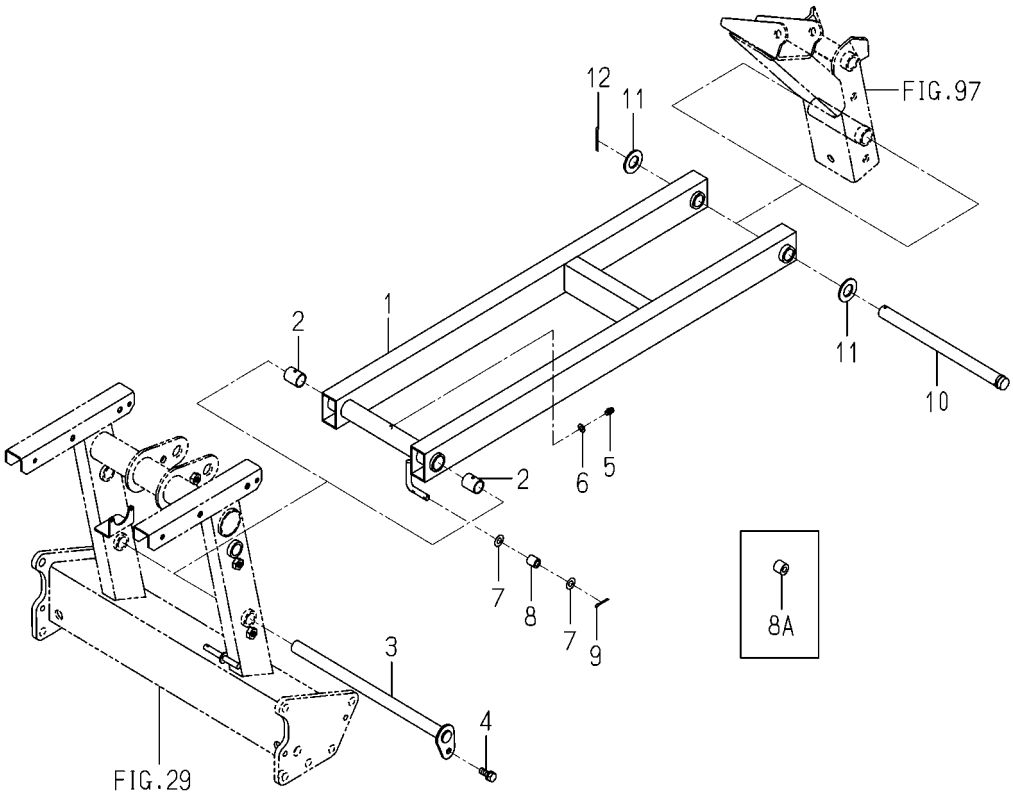


2233-414 -0100

| KEY | PART CODE | DESCRIPTION | SPC | TYPE OF MODEL NP80D E16 | | ITC | COL | GRP | REMARKS |
|---|---|---|---|---|---|---|---|---|---|
| 1 | 2233-414-200-10 | LINK/LOWER/8 COMP | * | 1 | | | | | |
| 2 | P112-711-201-00 | BUSH/18X21X25 | * | 2 | | | | | |
| 3 | 2232-414-210-00 | PIN/18X315 COMP | * | 1 | | | | | |
| 4 | V211-260-802-00 | BOLT,S/M8X20 | * | 1 | | | | | |
| 5 | V760-150-000-00 | NIPPLE,GREASE | * | 1 | | | | | |
| 6 | V411-260-006-00 | WASHER,PL/M6 | * | 1 | | | | | |
| 7 | V411-260-008-00 | WASHER,PL/M8 | * | 2 | | | | | |
| 8 | 2186-533-002-00 | ROLLER | * | 1 -176 | | | | | |
| 8A | 2232-581-005-00 | ROLLER/08X14X17 | * | 1 177- | | | | | |
| 9 | V500-163-002-00 | PIN,SPLIT/3X20 | * | 1 | | | | | |
| 10 | 2232-415-001-00 | PIN/18X247 | * | 1 | | | | | |
| 11 | V411-260-018-00 | WASHER,PL/M18 | * | 2 | | | | | |
| 12 | V500-163-003-50 | PIN,SPLIT/3X35 | * | 1 | | | | | |

# FIG. 51 LINK(UPPER)SYSTEM

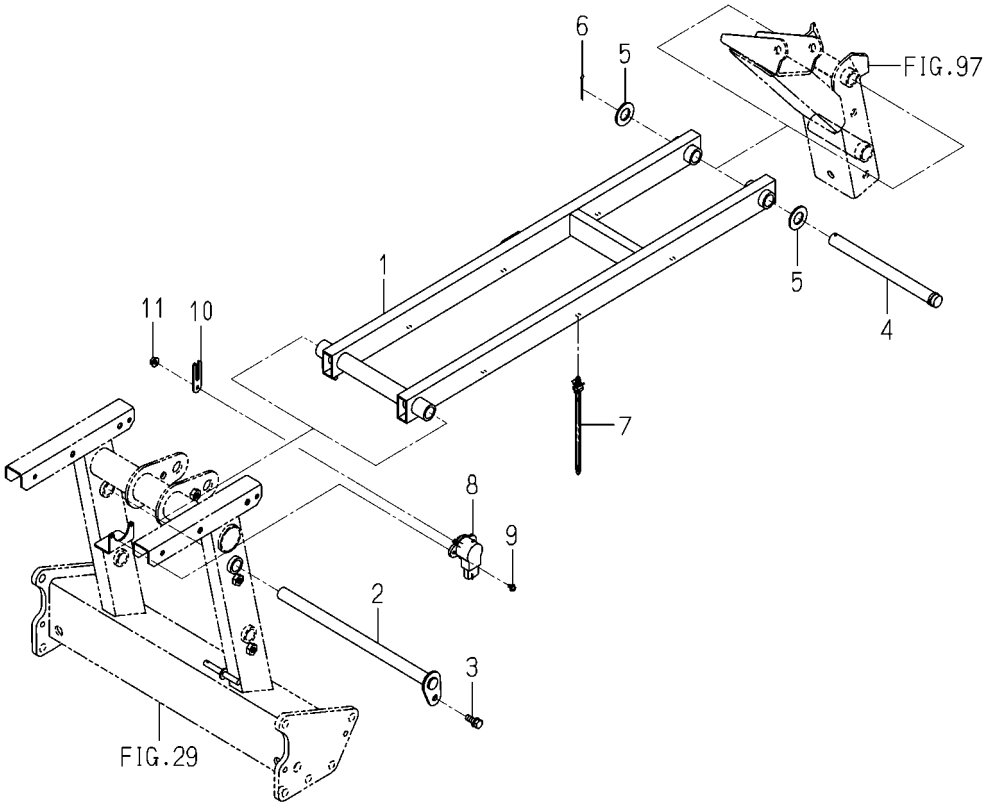


2232-415D-0100

| KEY | PART CODE | DESCRIPTION | SPC | TYPE OF MODEL NP80D E16 | | ITC | COL | GRP | REMARKS |
|---|---|---|---|---|---|---|---|---|---|
| 1 | 2232-415-300-00 | LINK/UPPER/6D COMP | * | 1 | | | | | |
| 2 | 2232-414-210-00 | PIN/18X315 COMP | * | 1 | | | | | |
| 3 | V211-260-802-00 | BOLT,S/M8X20 | * | 1 | | | | | |
| 4 | 2232-415-002-00 | PIN/18X211 | * | 1 | | | | | |
| 5 | V411-260-018-00 | WASHER,PL/M18 | * | 2 | | | | | |
| 6 | V500-163-003-50 | PIN,SPLIT/3X35 | * | 1 | | | | | |
| 7 | 2204-537-002-00 | BAND | * | 6 | | | | | |
| 8 | 1729-662-340-00 | SENSOR/ANGLE/110/R | * | 1 | | | | | |
| 9 | V120-364-001-00 | SCREW,SP/M4X10 | * | 2 | | | | | |
| 10 | 2232-415-003-20 | SENSORARM/LINK | * | 1 | | | | | |
| 11 | V360-260-006-00 | NUT/WASHER/M6 | * | 1 | | | | | |

# FIG. 52 CLUTCH(PLANTING)SYSTEM

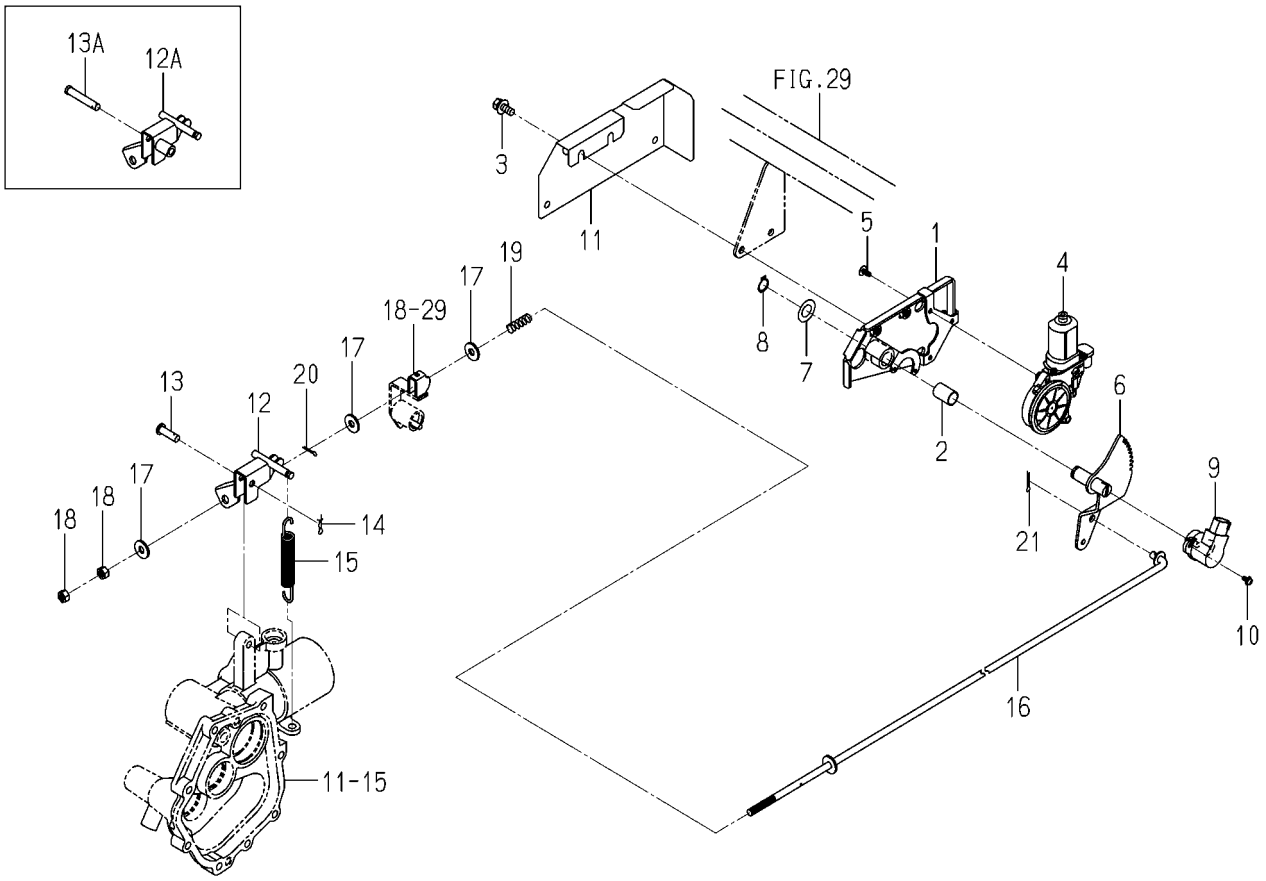


2232-422 -0100

| KEY | PART CODE | DESCRIPTION | SPC | TYPE OF MODEL NP80D E16 | | ITC | COL | GRP | REMARKS |
|---|---|---|---|---|---|---|---|---|---|
| 1 | 2232-422-200-10 | BASE/MOTOR/PLANTING | * | 1 | | | | | |
| 2 | 2232-583-005-00 | BUSH/15X17X25 | * | 1 | | | | | |
| 3 | V211-360-802-00 | BOLT,SP/M8X20 | * | 2 | | | | | |
| 4 | 3888-726-200-00 | MOTOR/LH ASSY | * | 1 | | | | | |
| 5 | 3888-726-001-00 | TAPPINGSCREW/M5X12 | * | 3 | | | | | |
| 6 | 2232-422-210-00 | GEAR/CLUTCH/PLANTING | * | 1 | | | | | |
| 7 | 3747-342-002-00 | WASHER | * | 1 | | | | | |
| 8 | V704-140-015-00 | RING,SNAP/15 C | * | 1 | | | | | |
| 9 | 1729-662-330-00 | SENSOR/ANGLE/75 ASSY | * | 1 | | | | | |
| 10 | V120-364-001-00 | SCREW,SP/M4X10 | * | 2 | | | | | |
| 11 | 2232-422-001-20 | COVER/MOTOR/PLANTING | * | 1 | | | | | |
| 12 | 2232-422-230-20 | ARM/CLUTCH/PLANTING | * | 1 -80 | | | | | |
| 12A | 2232-422-230-30 | ARM/CLUTCH/PLANTING | * | 1 81- | | 3 | | | |
| 13 | 2186-336-003-00 | PIN/08X27 | * | 1 -80 | | | | | |
| 13A | 2232-422-024-00 | PIN/08X47 | * | 1 81- | | | | | |
| 14 | 2161-735-006-00 | PIN/STOPPER/8 | * | 1 | | | | | |
| 15 | 2232-422-031-10 | SPRING/HE114 | * | 1 | | | | | |
| 16 | 2232-422-270-10 | ROD/PLANTING CLUTCH/ | * | 1 | | | | | |
| 17 | 4106-102-028-00 | WASHER | * | 3 | | | | | |
| 18 | V304-260-008-00 | NUT/M8 | * | 2 | | | | | |
| 19 | 2232-422-002-00 | SPRING/HC032 | * | 1 | | | | | |
| 20 | V500-163-001-50 | PIN,SPLIT/3X15 | * | 1 | | | | | |
| 21 | V500-163-002-00 | PIN,SPLIT/3X20 | * | 1 | | | | | |

# FIG. 53 VALVE SYSTEM

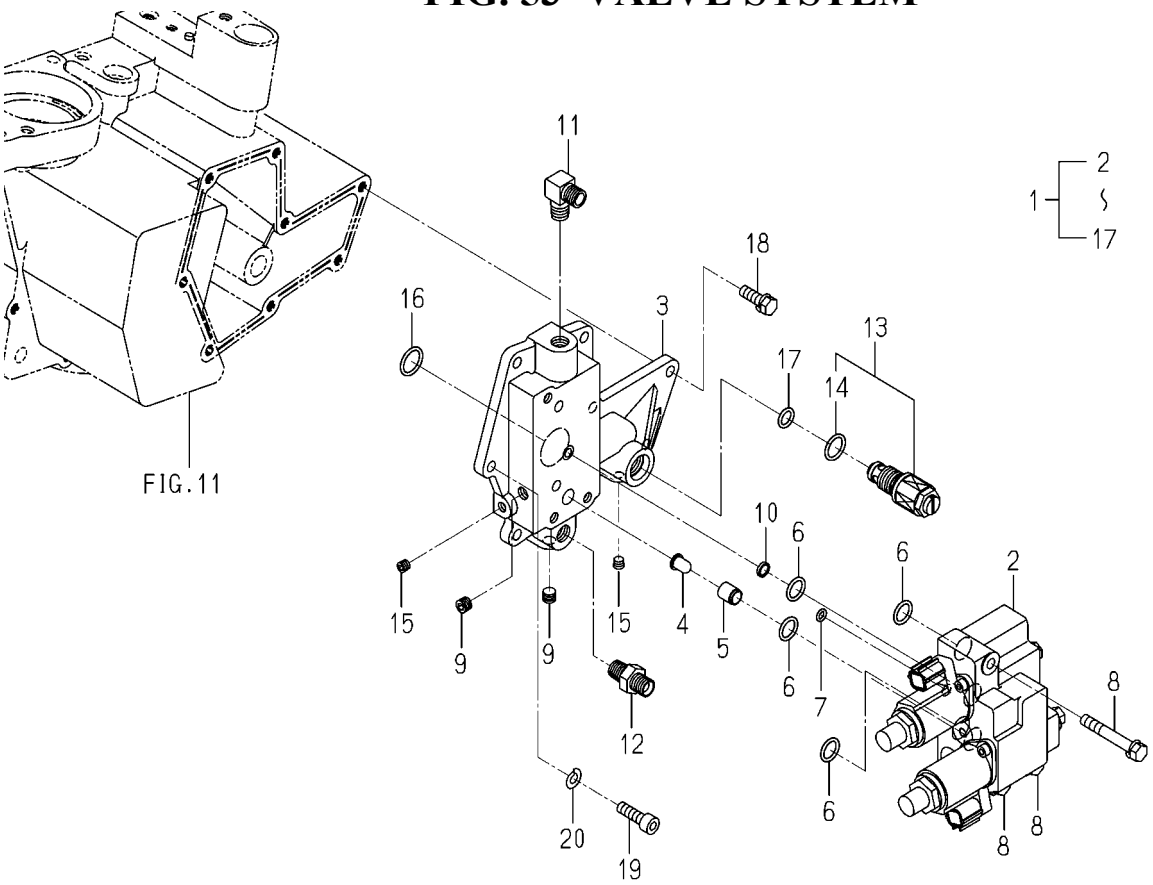


2233-435 -0100

| KEY | PART CODE | DESCRIPTION | SPC | TYPE OF MODEL NP80D E16 | | ITC | COL | GRP | REMARKS |
|---|---|---|---|---|---|---|---|---|---|
| 1 | 2233-435-200-10 | VALVE/KTMS6/8 SET | * | 1 | | | | | |
| 2 | K200-269-000-00 | VALVE/PFV/15ASSY | * | 1 | | | | | |
| 3 | 2232-435-001-00 | METAL/RELIEF/KTMS6 | * | 1 | | | | | |
| 4 | 1675-503-001-00 | FILTER/LINE/09X12X15 | * | 1 | | | | | |
| 5 | 2232-435-003-00 | COLLAR/10X12X14 | * | 1 | | | | | |
| 6 | V720-112-401-40 | O-RING/1B,P14 | * | 4 | | | | | |
| 7 | V720-111-900-60 | O-RING/1B,P6 | * | 1 | | | | | |
| 8 | V211-260-805-50 | BOLT,S/M8X55 | * | 3 | | | | | |
| 9 | V780-140-000-2T | PLUG/SCREW/SEAL | * | 2 | | | | | |
| 10 | 1757-509-012-00 | FILTER/PORT/11 | * | 1 | | | | | |
| 11 | 3768-185-022-10 | ADAPTER/90DEG/PUMP | * | 1 | | | | | |
| 12 | 3768-185-014-10 | ADAPTER,STRAIGHT | * | 1 | | | | | |
| 13 | K250-083-000-00 | VALVE/RELIEF/08 ASSY | * | 1 | | | | | |
| 14 | V720-112-401-60 | O-RING/1B,P16 | * | 1 | | | | | |
| 15 | V780-140-000-1T | PLUG/SCREW/SEAL | * | 2 | | | | | |
| 16 | V720-112-401-80 | O-RING/1B,P18 | * | 1 | | | | | |
| 17 | V720-112-401-10 | O-RING/1B,P11 | * | 1 | | | | | |
| 18 | V211-260-802-50 | BOLT,S/M8X25 | * | 7 | | | | | |
| 19 | V220-540-802-50 | SCREW,SOCKET/M8X25 | * | 1 | | | | | |
| 20 | V401-160-008-00 | WASHER,SP/M8 | * | 1 | | | | | |

# FIG. 54 CONTROLLER(STEERING)SYSTEM

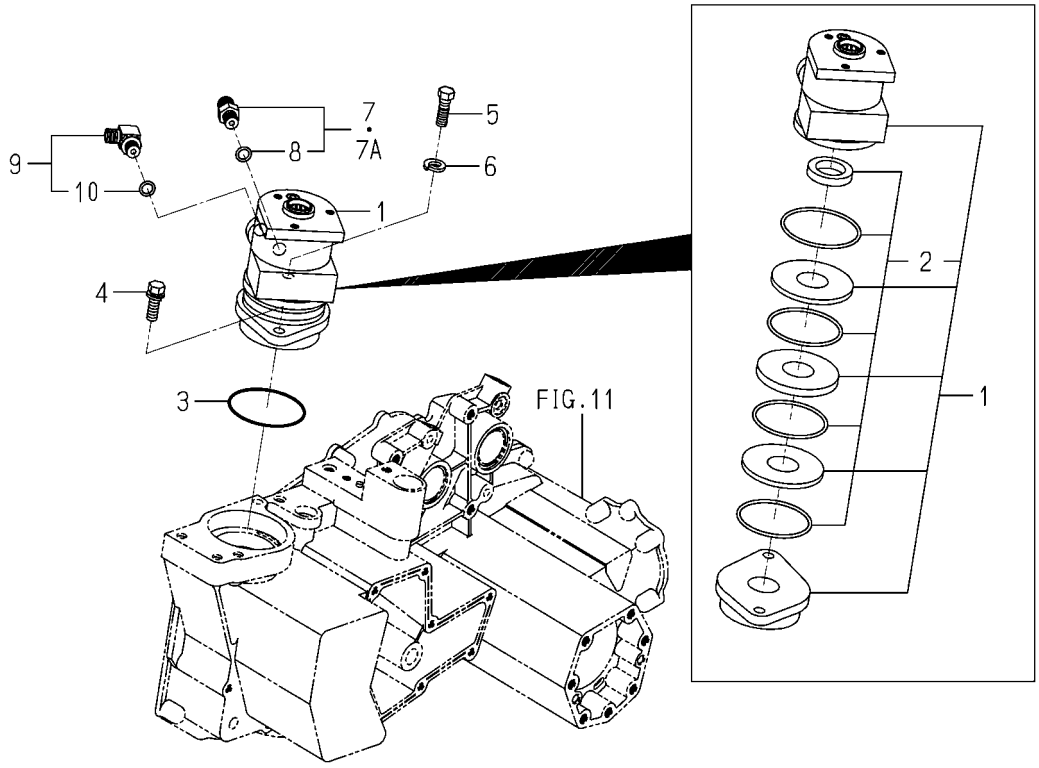


2233-440 -0100

| KEY | PART CODE | DESCRIPTION | SPC | TYPE OF MODEL NP80D | TYPE OF MODEL E16 | ITC | COL | GRP | REMARKS |
|---|---|---|---|---|---|---|---|---|---|
| 1 | 2204-440-300-10 | TORQUEGENERATOR | * | 1 | | | | | |
| 2 | 2204-440-310-00 | KIT/SEAL ASSY | * | 1 | | | | | |
| 3 | 2194-301-009-00 | O-RING | * | 1 | | | | | |
| 4 | 2204-323-011-00 | BOLT/SEAL/M10X30/S | * | 1 | | | | | |
| 5 | 2204-440-001-30 | BOLT/REAMER/M10X30 | * | 1 | | | | | |
| 6 | V401-160-012-00 | WASHER,SP/M12 | * | 1 | | | | | |
| 7 | 1650-509-280-00 | ADAPTER/PF1/4 ASSY | * | 1 -80 | | | | | |
| 7A | 3829-387-410-00 | ADPTER/G1/4.1/4 | * | 1 81- | | | | | |
| 8 | V720-112-401-10 | O-RING/1B,P11 | * | 1 | | | | | |
| 9 | 1705-408-230-00 | ADAPTER/L/G1/4 ASSY | * | 1 | | | | | |
| 10 | V720-112-401-10 | O-RING/1B,P11 | * | 1 | | | | | |

# FIG. 55 HOOD SYSTEM(EXCEPT Z TYPE)

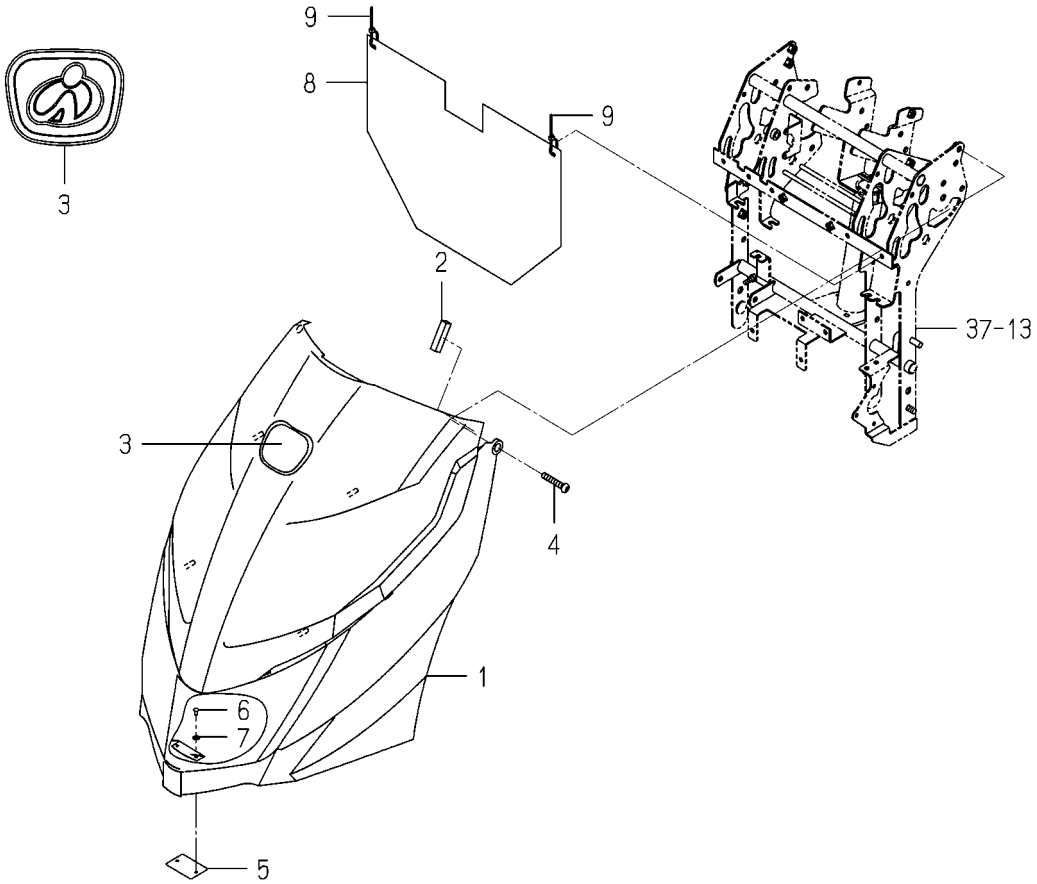


2232-501 -0100

| KEY | PART CODE | DESCRIPTION | SPC | TYPE OF MODEL NP80D E16 | | ITC | COL | GRP | REMARKS |
|---|---|---|---|---|---|---|---|---|---|
| 1 | 2232-501-200-50 | HOOD/NP ASSY | * | 1 | | | | | |
| 2 | 2232-501-032-00 | CUSHION/HOOD | * | 2 | | | | | |
| 3 | 3533-901-012-00 | ORNAMENT/ISEKI | * | 1 | | | | | |
| 4 | 2232-501-003-00 | SCREW/TRUSS/M8X40 | * | 2 | | | | | |
| 5 | 2232-501-004-10 | PLATE/MAGNET/NP | * | 1 | | | | | |
| 6 | W296-134-008-60 | RIVET,BLIND/4X8.6 | * | 2 | | | | | |
| 7 | V411-260-004-00 | WASHER,PL/M4 | * | 2 | | | | | |
| 8 | 2233-501-063-10 | COVER/CONTROLLER/Z | * | 1 1639- | | | | | |
| 9 | 2132-545-008-00 | WIRE BAND(92) | * | 2 1639- | | | | | |

# FIG. 56 HOOD SYSTEM(Z TYPE)

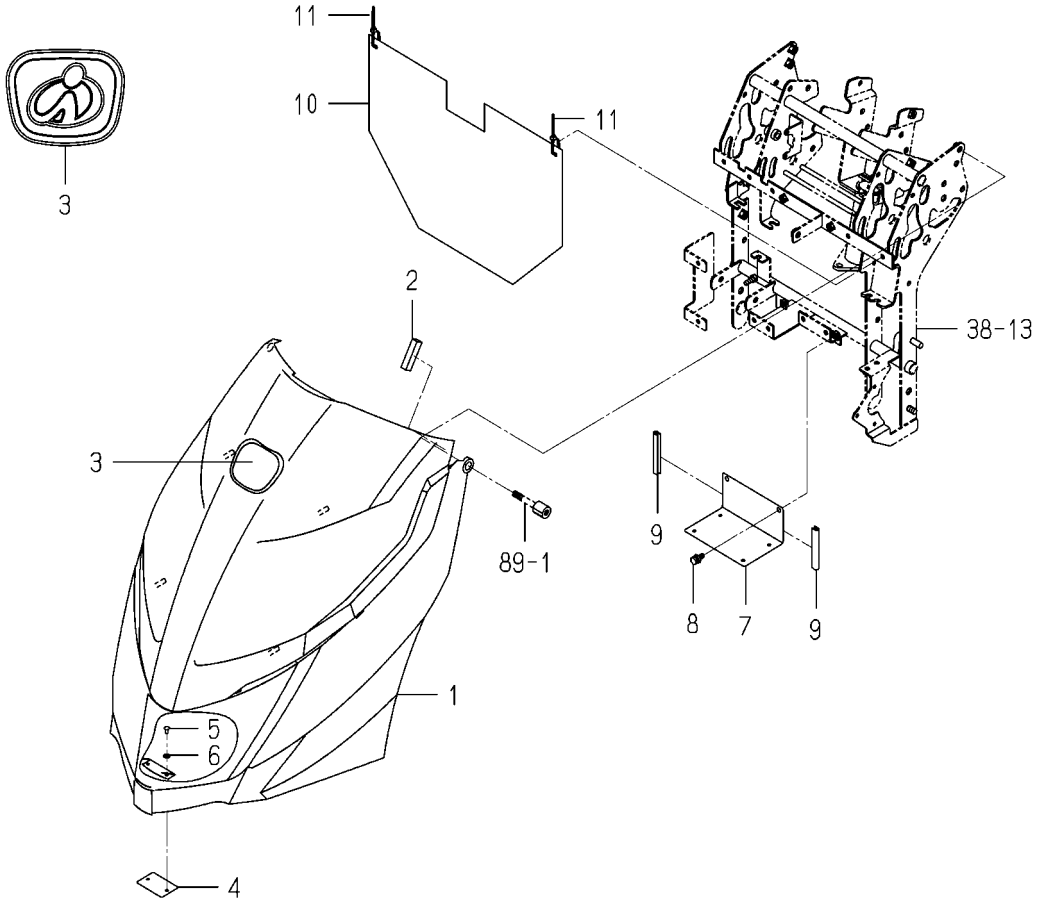


2232-501A-0100

| KEY | PART CODE | DESCRIPTION | SPC | TYPE OF MODEL NP80D E16 | | ITC | COL | GRP | REMARKS |
|---|---|---|---|---|---|---|---|---|---|
| 1 | 2232-501-200-50 | HOOD/NP ASSY | * | 1 | | | | | |
| 2 | 2232-501-032-00 | CUSHION/HOOD | * | 2 | | | | | |
| 3 | 3533-901-012-00 | ORNAMENT/ISEKI | * | 1 | | | | | |
| 4 | 2232-501-004-10 | PLATE/MAGNET/NP | * | 1 | | | | | |
| 5 | W296-134-008-60 | RIVET,BLIND/4X8.6 | * | 2 | | | | | |
| 6 | V411-260-004-00 | WASHER,PL/M4 | * | 2 | | | | | |
| 7 | 2232-501-011-00 | STAY/RECEIVER/6Z | * | 1 | | | | | |
| 8 | V210-360-601-60 | BOLT,SP/M6X16 | * | 2 | | | | | |
| 9 | 2161-320-001-00 | MOLE/70 | * | 2 | | | | | |
| 10 | 2233-501-063-10 | COVER/CONTROLLER/Z | * | 1 | | | | | |
| 11 | 2132-545-008-00 | WIRE BAND(92) | * | 2 | | | | | |

# FIG. 57 HOOD(REAR)SYSTEM

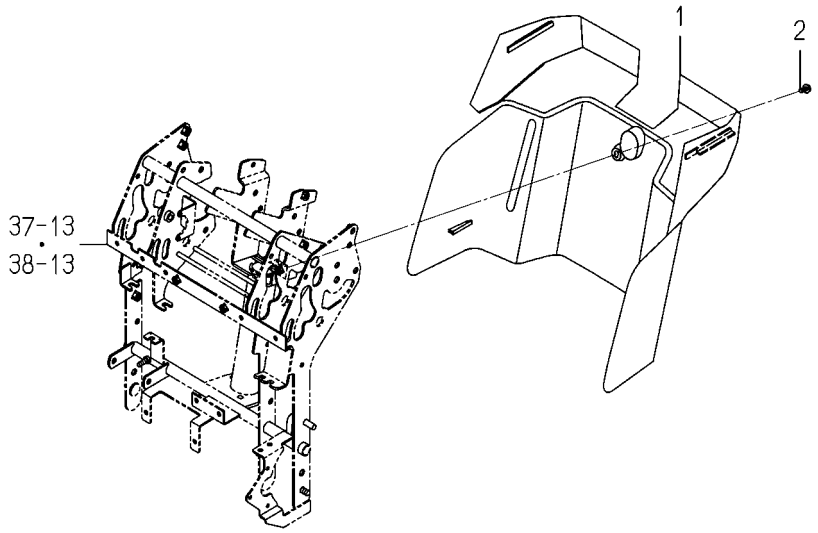


2233-507A-0100

| KEY | PART CODE | DESCRIPTION | SPC | TYPE OF MODEL NP80D E16 | | ITC | COL | GRP | REMARKS |
|---|---|---|---|---|---|---|---|---|---|
| 1 | 2233-507-002-00 | HOOD/REAR/8G/NP | * | 1 | | | | | |
| 2 | V120-366-001-60 | SCREW,SP/M6X16 | * | 1 | | | | | |

# FIG. 58 STEP(MAIN)SYSTEM(EXCEPT F TYPE)

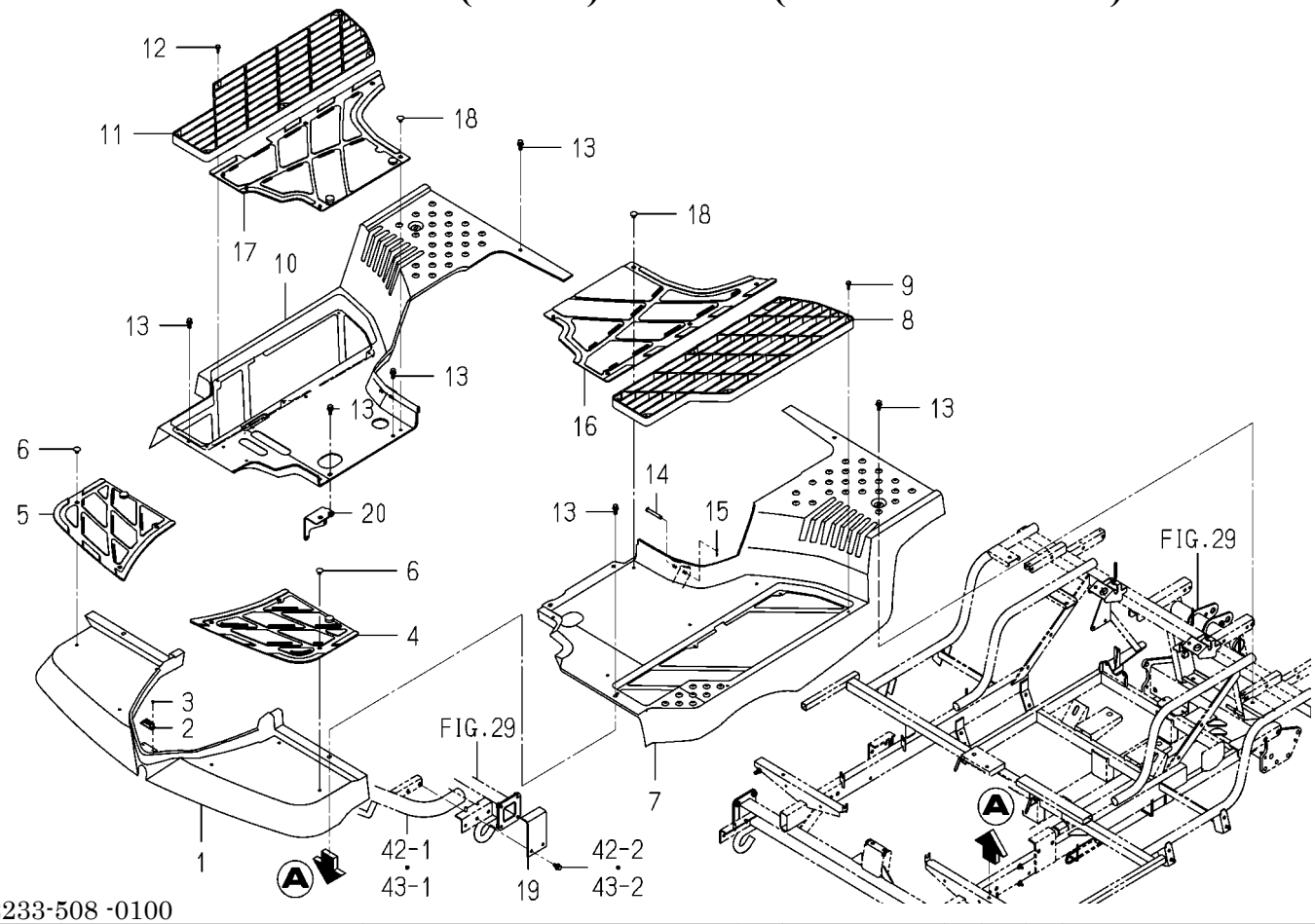


2233-508 -0100

| KEY | PART CODE | DESCRIPTION | SPC | TYPE OF MODEL NP80D | E16 | ITC | COL | GRP | REMARKS |
|---|---|---|---|---|---|---|---|---|---|
| 1 | 2232-508-001-10 | STEP/FRONT/NP | * | 1 | | | | | |
| 2 | 2204-501-005-00 | HOOD/MAGNET | * | 1 | | | | | |
| 3 | 3885-741-235-00 | RIVET/BLIND/STEEL/3. | * | 2 | | | | | |
| 4 | 2232-508-011-00 | MAT/FRONT/LH/NP | * | 1 | | | | | |
| 5 | 2232-508-012-00 | MAT/FRONT/RH/NP | * | 1 | | | | | |
| 6 | 2186-508-009-00 | CLIP,STEP MAT | * | 6 | | | | | |
| 7 | 2233-508-001-00 | STEP/CENTER/LH/D/NP | * | 1 | | | | | |
| 8 | 2232-508-003-00 | STEP/SEETHROUGH/NP | * | 1 | | | | | |
| 9 | 2213-508-004-00 | TAPBOLT/6X20 | * | 6 | | | | | |
| 10 | 2233-508-002-00 | STEP/CENTER/RH/D/NP | * | 1 | | | | | |
| 11 | 2232-508-003-00 | STEP/SEETHROUGH/NP | * | 1 | | | | | |
| 12 | 2213-508-004-00 | TAPBOLT/6X20 | * | 6 | | | | | |
| 13 | 2204-508-052-00 | BOLT/SP/M8X25/SUS FA | * | 8 | | | | | |
| 14 | 1329-106-002-00 | PIN,STAND | * | 2 | | | | | |
| 15 | 3908-170-020-00 | PIN/SNAP/08 | * | 2 | | | | | |
| 16 | 2232-508-013-00 | MAT/CENTER/LH/NP | * | 1 | | | | | |
| 17 | 2232-508-014-00 | MAT/CENTER/RH/NP | * | 1 | | | | | |
| 18 | 2186-508-009-00 | CLIP,STEP MAT | * | 7 | | | | | |
| 19 | 2232-508-021-00 | PLATE/STAY/STEP/FRON | * | 2 | | | | | |
| 20 | 2232-508-280-00 | PLATE/STEP/CENTER | * | 1 | | | | | |

# FIG. 59 STEP(MAIN)SYSTEM(F TYPE)

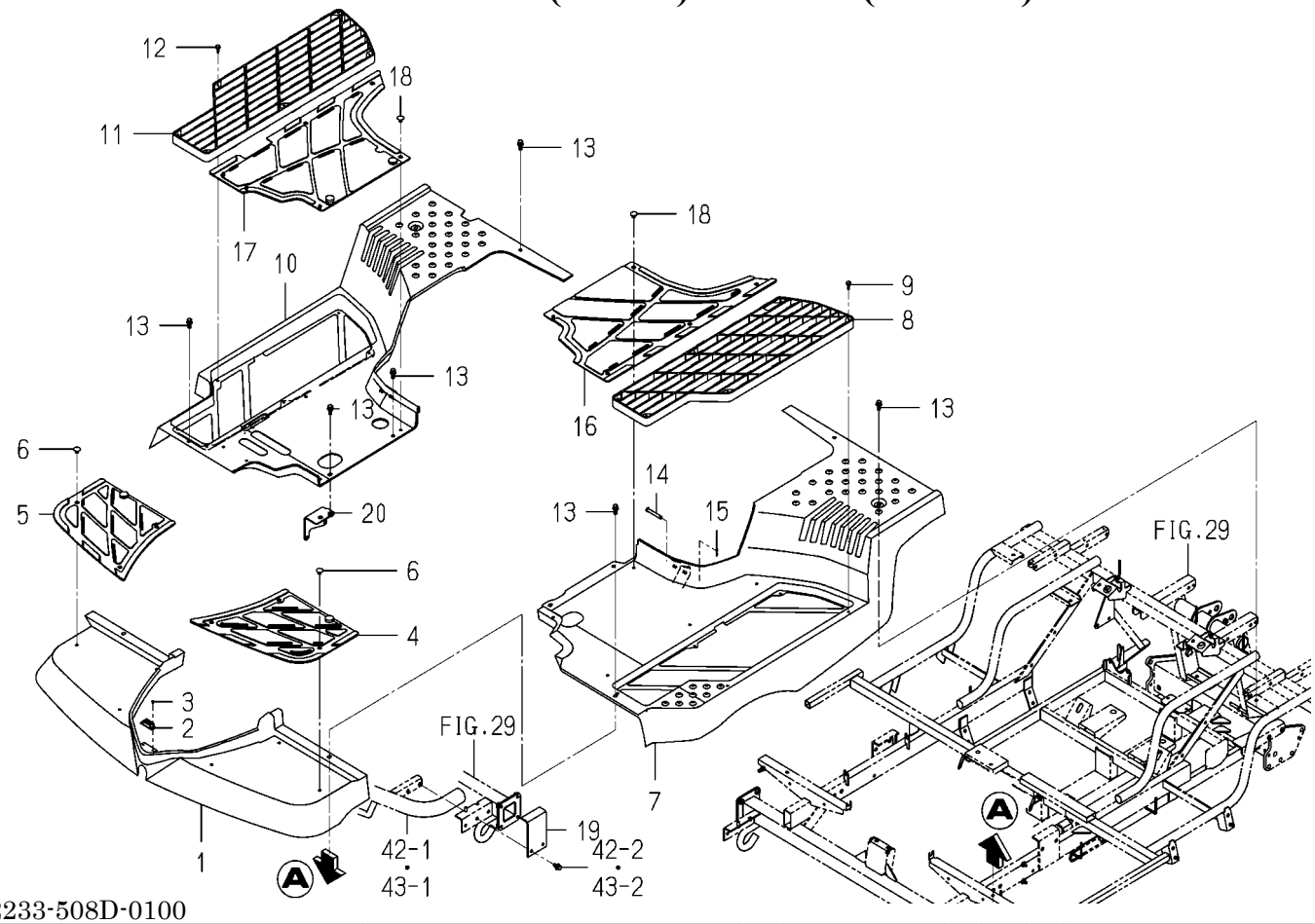


2233-508D-0100

| KEY | PART CODE | DESCRIPTION | SPC | TYPE OF MODEL NP80D E16 | | ITC | COL | GRP | REMARKS |
|---|---|---|---|---|---|---|---|---|---|
| 1 | 2232-508-001-10 | STEP/FRONT/NP | * | 1 | | | | | |
| 2 | 2204-501-005-00 | HOOD/MAGNET | * | 1 | | | | | |
| 3 | 3885-741-235-00 | RIVET/BLIND/STEEL/3. | * | 2 | | | | | |
| 4 | 2232-508-011-00 | MAT/FRONT/LH/NP | * | 1 | | | | | |
| 5 | 2232-508-012-00 | MAT/FRONT/RH/NP | * | 1 | | | | | |
| 6 | 2186-508-009-00 | CLIP,STEP MAT | * | 6 | | | | | |
| 7 | 2233-508-001-00 | STEP/CENTER/LH/D/NP | * | 1 | | | | | |
| 8 | 2232-508-003-00 | STEP/SEETHROUGH/NP | * | 1 | | | | | |
| 9 | 2213-508-004-00 | TAPBOLT/6X20 | * | 6 | | | | | |
| 10 | 2233-508-006-00 | STEP/CENTER/RH/DF/NP | * | 1 | | | | | |
| 11 | 2232-508-003-00 | STEP/SEETHROUGH/NP | * | 1 | | | | | |
| 12 | 2213-508-004-00 | TAPBOLT/6X20 | * | 6 | | | | | |
| 13 | 2204-508-052-00 | BOLT/SP/M8X25/SUS FA | * | 8 | | | | | |
| 14 | 1329-106-002-00 | PIN,STAND | * | 2 | | | | | |
| 15 | 3908-170-020-00 | PIN/SNAP/08 | * | 2 | | | | | |
| 16 | 2232-508-013-00 | MAT/CENTER/LH/NP | * | 1 | | | | | |
| 17 | 2232-508-014-00 | MAT/CENTER/RH/NP | * | 1 | | | | | |
| 18 | 2186-508-009-00 | CLIP,STEP MAT | * | 7 | | | | | |
| 19 | 2232-508-021-00 | PLATE/STAY/STEP/FRON | * | 2 | | | | | |
| 20 | 2232-508-280-00 | PLATE/STEP/CENTER | * | 1 | | | | | |

# FIG. 60 STEP(SIDE)SYSTEM(EXCEPT F TYPE)

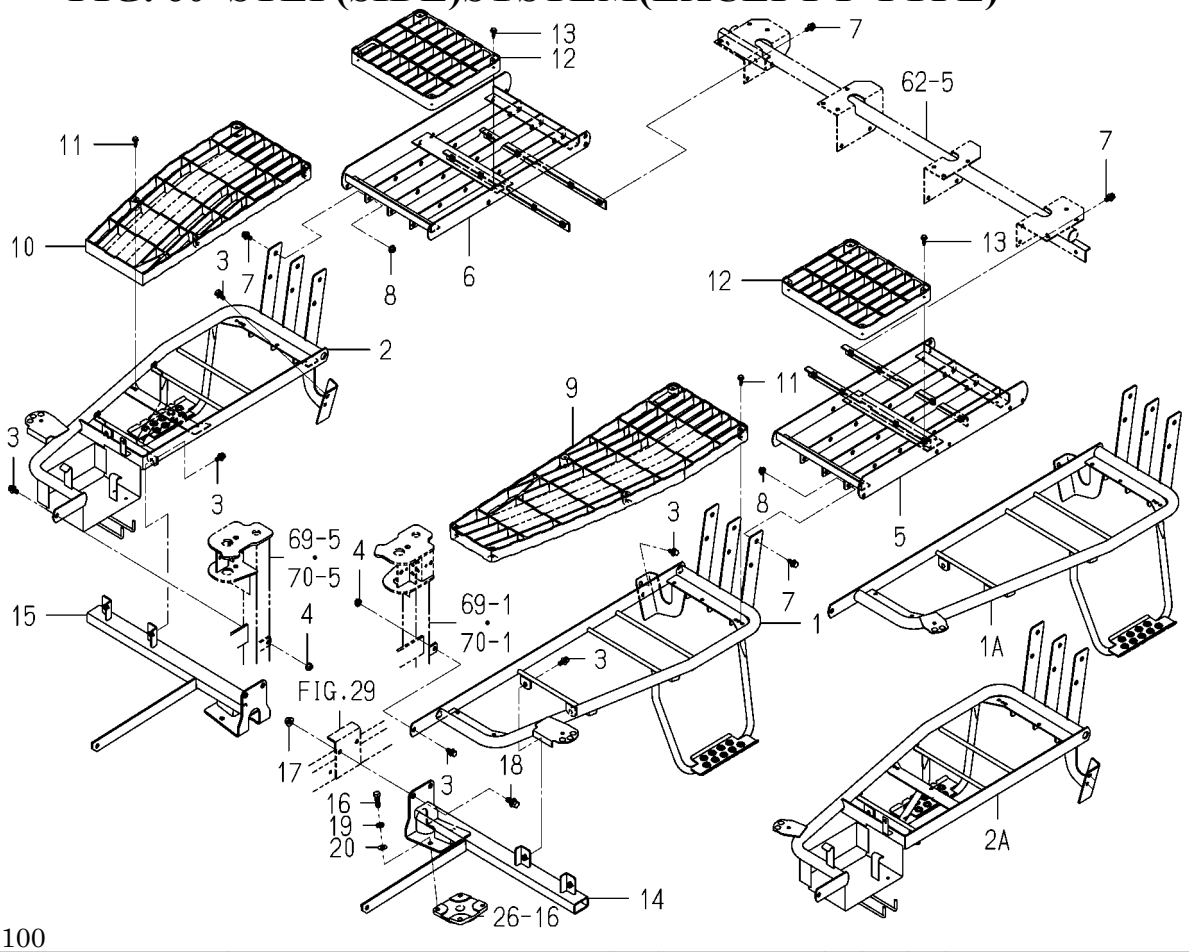


2233-509D-0100

| KEY | PART CODE | DESCRIPTION | SPC | TYPE OF MODEL NP80D E16 | | ITC | COL | GRP | REMARKS |
|---|---|---|---|---|---|---|---|---|---|
| 1 | 2233-509-200-40 | STEP/SIDE/LH COMP | * | 1 -175 | | 1 | 5K | | |
| 1A | 2233-509-200-50 | STEP/SIDE/LH COMP | * | 1 176- | | 3 | 5K | | |
| 2 | 2233-509-250-40 | STEP/SIDE/RH COMP | * | 1 -175 | | 1 | 5K | | |
| 2A | 2233-509-250-50 | STEP/SIDE/RH COMP | * | 1 176- | | 3 | 5K | | |
| 3 | V211-360-802-50 | BOLT,SP/M8X25 | * | 8 | | | | | |
| 4 | V362-260-008-00 | NUT/WASHER/M8 | * | 4 | | | | | |
| 5 | 2233-509-230-00 | STEP/SIDE/REAR/LH | * | 1 | | | 5K | | |
| 6 | 2233-509-240-00 | STEP/SIDE/REAR/RH | * | 1 | | | 5K | | |
| 7 | V211-360-802-00 | BOLT,SP/M8X20 | * | 14 | | | | | |
| 8 | V362-260-008-00 | NUT/WASHER/M8 | * | 6 | | | | | |
| 9 | 2204-508-003-10 | STEP/SEETHROUGH | * | 1 | | | | | |
| 10 | 2233-509-002-00 | STEP/SEE THROUGH/SID | * | 1 | | | | | |
| 11 | 2213-508-004-00 | TAPBOLT/6X20 | * | 8 | | | | | |
| 12 | 2233-509-001-00 | STEP/SEE THROUGH/REA | * | 4 | | | | | |
| 13 | 2213-508-004-00 | TAPBOLT/6X20 | * | 16 | | | | | |
| 14 | 2233-509-320-20 | STAY/SIDE/8LH/E12 | * | 1 | | | | | |
| 15 | 2233-509-330-20 | STAY/SIDE/8RH/E12 | * | 1 | | | | | |
| 16 | V201-361-003-00 | BOLT/M10X30/7T | * | 4 | | | | | |
| 17 | V363-260-010-00 | NUT/WASHER/M10 | * | 4 | | | | | |
| 18 | V211-361-002-50 | BOLT,SP/M10X25 | * | 4 | | | | | |
| 19 | V401-160-010-00 | WASHER,SP/M10 | * | 4 | | | | | |
| 20 | V411-260-010-00 | WASHER,PL/M10 | * | 4 | | | | | |

# FIG. 61 STEP(SIDE)SYSTEM(F TYPE)

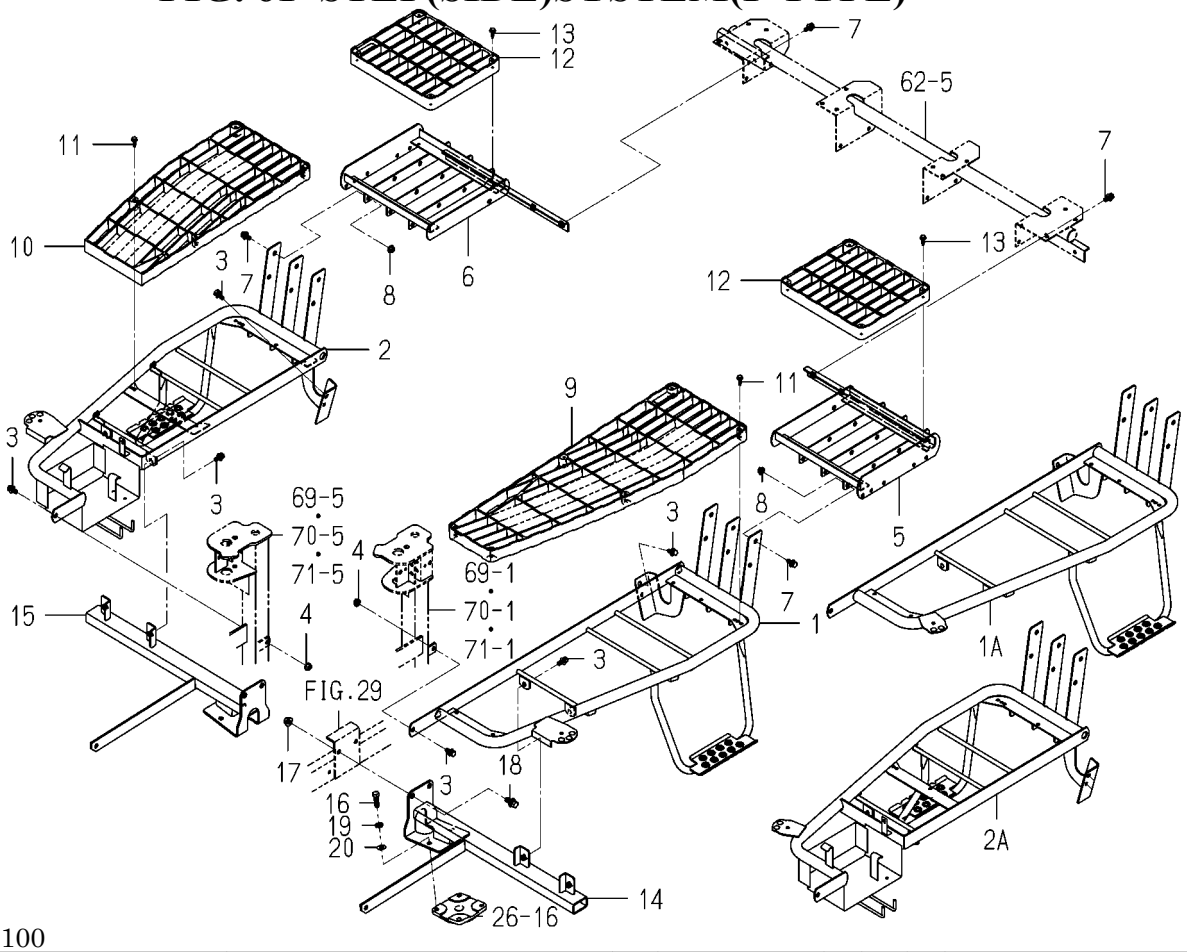


2233-509G-0100

| KEY | PART CODE | DESCRIPTION | SPC | TYPE OF MODEL NP80D E16 | | ITC | COL | GRP | REMARKS |
|---|---|---|---|---|---|---|---|---|---|
| 1 | 2233-509-200-40 | STEP/SIDE/LH COMP | * | 1 -175 | | 1 | 5K | | |
| 1A | 2233-509-200-50 | STEP/SIDE/LH COMP | * | 1 176- | | 3 | 5K | | |
| 2 | 2233-509-250-40 | STEP/SIDE/RH COMP | * | 1 -175 | | 1 | 5K | | |
| 2A | 2233-509-250-50 | STEP/SIDE/RH COMP | * | 1 176- | | 3 | 5K | | |
| 3 | V211-360-802-50 | BOLT,SP/M8X25 | * | 8 | | | | | |
| 4 | V362-260-008-00 | NUT/WASHER/M8 | * | 4 | | | | | |
| 5 | 2233-509-360-00 | STEP/SIDE/F/LH COMP | * | 1 | | | 5K | | |
| 6 | 2233-509-380-00 | STEP/SIDE/F/RH COMP | * | 1 | | | 5K | | |
| 7 | V211-360-802-00 | BOLT,SP/M8X20 | * | 10 | | | | | |
| 8 | V362-260-008-00 | NUT/WASHER/M8 | * | 6 | | | | | |
| 9 | 2204-508-003-10 | STEP/SEETHROUGH | * | 1 | | | | | |
| 10 | 2233-509-002-00 | STEP/SEE THROUGH/SID | * | 1 | | | | | |
| 11 | 2213-508-004-00 | TAPBOLT/6X20 | * | 8 | | | | | |
| 12 | 2233-509-001-00 | STEP/SEE THROUGH/REA | * | 2 | | | | | |
| 13 | 2213-508-004-00 | TAPBOLT/6X20 | * | 8 | | | | | |
| 14 | 2233-509-320-20 | STAY/SIDE/8LH/E12 | * | 1 | | | | | |
| 15 | 2233-509-330-20 | STAY/SIDE/8RH/E12 | * | 1 | | | | | |
| 16 | V201-361-003-00 | BOLT/M10X30/7T | * | 4 | | | | | |
| 17 | V363-260-010-00 | NUT/WASHER/M10 | * | 4 | | | | | |
| 18 | V211-361-002-50 | BOLT,SP/M10X25 | * | 4 | | | | | |
| 19 | V401-160-010-00 | WASHER,SP/M10 | * | 4 | | | | | |
| 20 | V411-260-010-00 | WASHER,PL/M10 | * | 4 | | | | | |

# FIG. 62 STEP(REAR)SYSTEM(EXCEPT F TYPE)

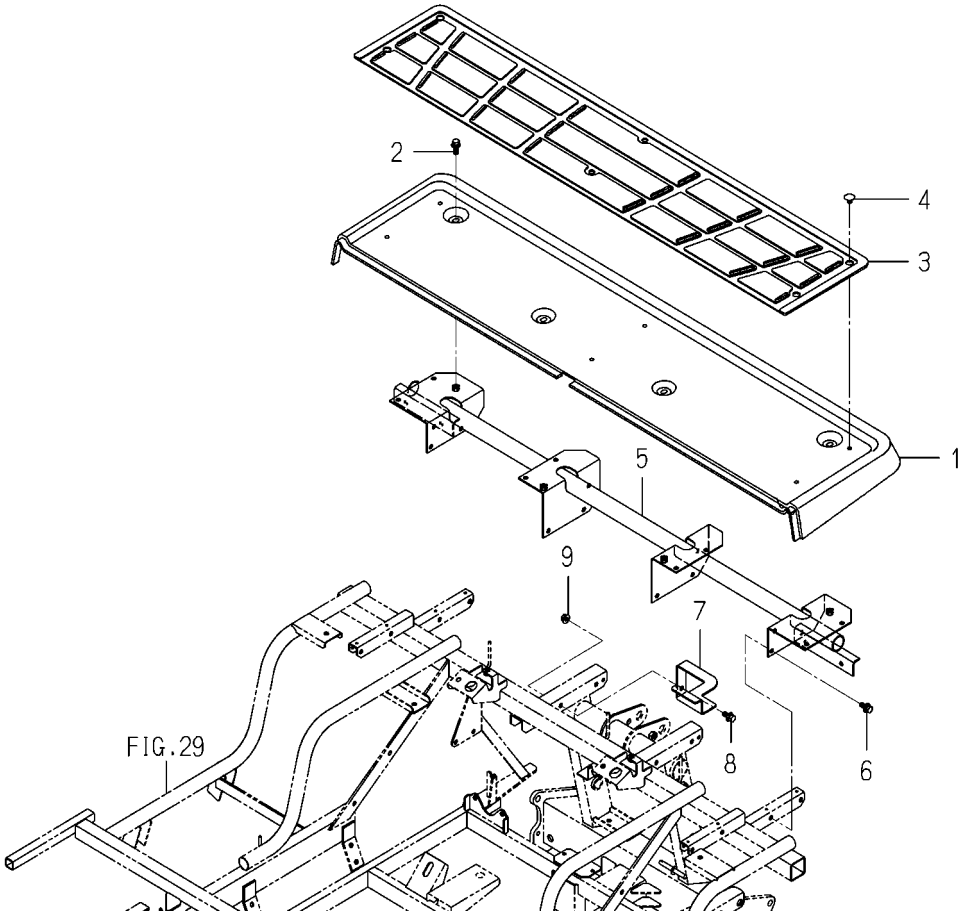


2233-510 -0100

| KEY | PART CODE | DESCRIPTION | SPC | TYPE OF MODEL NP80D E16 | | ITC | COL | GRP | REMARKS |
|---|---|---|---|---|---|---|---|---|---|
| 1 | 2232-510-001-10 | STEP/REAR/NP | * | 1 | | | | | |
| 2 | 2204-508-052-00 | BOLT/SP/M8X25/SUS FA | * | 4 | | | | | |
| 3 | 2232-510-002-10 | MAT/REAR/NP | * | 1 | | | | | |
| 4 | 2186-508-009-00 | CLIP,STEP MAT | * | 6 | | | | | |
| 5 | 2233-510-200-00 | FRAME/REAR/8/NP COMP | * | 1 | | | | | |
| 6 | V211-360-802-00 | BOLT,SP/M8X20 | * | 8 | | | | | |
| 7 | 2233-510-008-00 | PLATE/SUPPORT/STEP | * | 1 81- | | | | | |
| 8 | V211-360-802-00 | BOLT,SP/M8X20 | * | 1 81- | | | | | |
| 9 | V362-260-008-00 | NUT/WASHER/M8 | * | 1 81- | | | | | |

# FIG. 63 COVER(ENGINE)SYSTEM

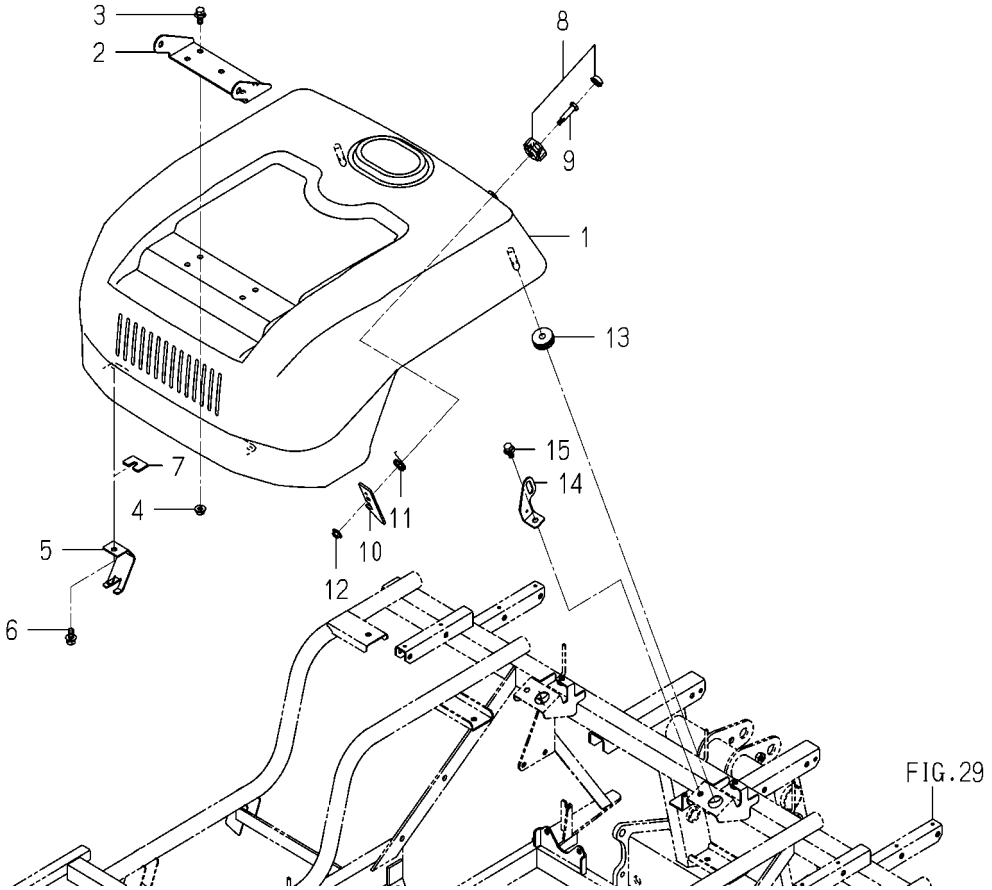


2233-512 -0100

| KEY | PART CODE | DESCRIPTION | SPC | TYPE OF MODEL NP80D | E16 | ITC | COL | GRP | REMARKS |
|---|---|---|---|---|---|---|---|---|---|
| 1 | 2233-512-001-00 | COVER/ENGINE/D/NP | * | 1 | | | | | |
| 2 | 2213-512-003-10 | BRACKET/SEAT/PZ/8 | * | 1 | | | | | |
| 3 | V211-360-802-00 | BOLT,SP/M8X20 | * | 4 | | | | | |
| 4 | V362-260-008-00 | NUT/WASHER/M8 | * | 4 | | | | | |
| 5 | 2204-512-003-10 | STAY/HINGE/PZ | * | 2 | | | | | |
| 6 | V211-360-802-00 | BOLT,SP/M8X20 | * | 2 | | | | | |
| 7 | 2233-512-005-00 | PLATE/SPACER/COVER | * | 2 | | | | | |
| 8 | 2194-508-220-10 | KNOB SET | * | 1 | | | | | |
| 9 | 2194-508-008-00 | PIN | * | 1 | | | | | |
| 10 | 2209-508-013-00 | PLATE/COVER/ROCK/PQZ | * | 1 | | | | | |
| 11 | 2233-512-004-00 | SPRING/HT22 | * | 1 | | | | | |
| 12 | V361-260-006-00 | NUT,WASHER/M6 | * | 1 | | | | | |
| 13 | 3737-154-003-00 | CUSHION,SEAT | * | 2 | | | | | |
| 14 | 2233-512-002-00 | PLATE/LOCK/COVER/ENG | * | 1 | | | | | |
| 15 | V211-360-802-00 | BOLT,SP/M8X20 | * | 1 | | | | | |

# FIG. 64 TRAY(SEEDLING/SUB)SYSTEM(1/2) (R TYPE EXCEPT F)

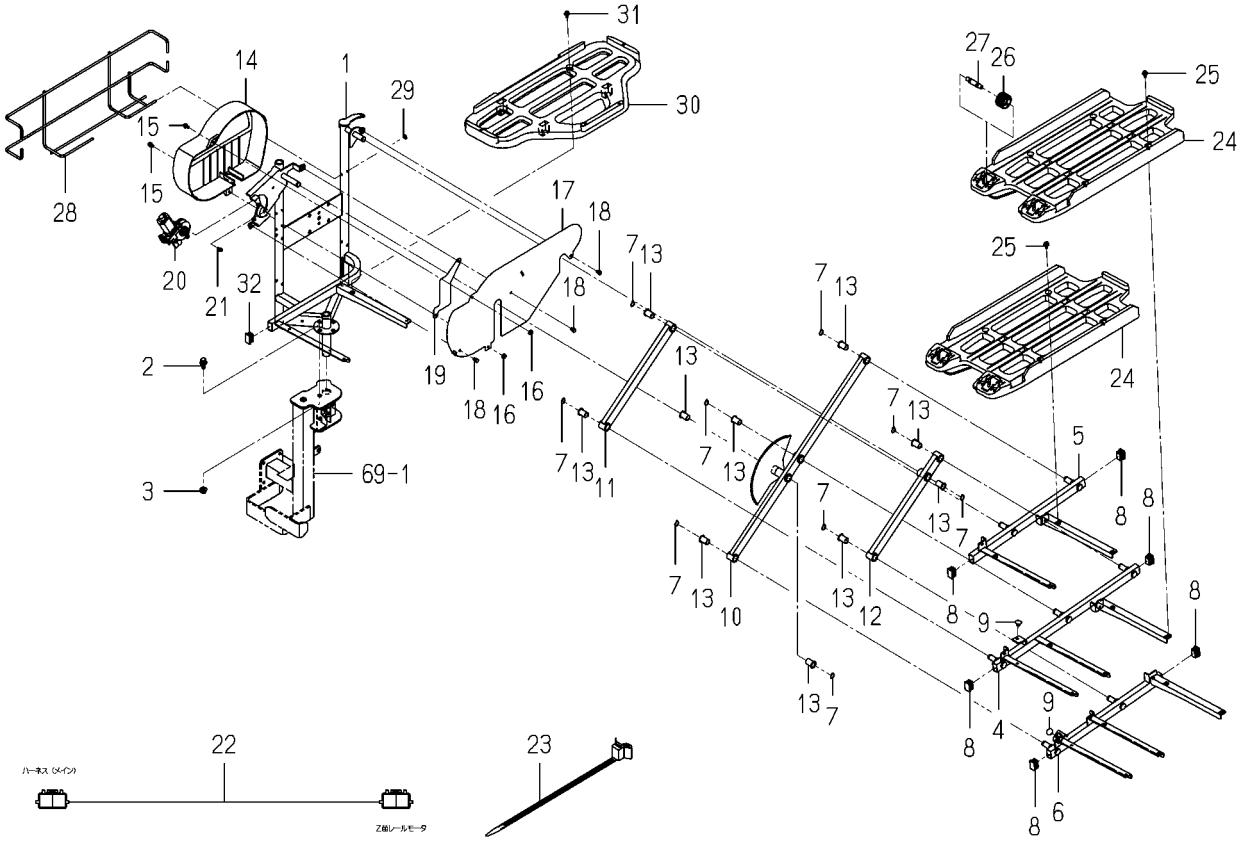


2233-513A-0100

| KEY | PART CODE | DESCRIPTION | SPC | TYPE OF MODEL NP80D | TYPE OF MODEL E16 | ITC | COL | GRP | REMARKS |
|---|---|---|---|---|---|---|---|---|---|
| 1 | 2233-513-200-00 | SEEDLING FRAME/BASE/ | * | 1 | | | 7F | | |
| 2 | V211-361-002-50 | BOLT,SP/M10X25 | * | 1 | | | | | |
| 3 | V363-260-010-00 | NUT/WASHER/M10 | * | 1 | | | | | |
| 4 | 2204-513-720-21 | SEEDLING FRAME/SLIDE | * | 1 | | | 7F | | |
| 5 | 2204-513-730-21 | SEEDLING FRAME/SLIDE | * | 1 | | | 7F | | |
| 6 | 2204-513-740-21 | SEEDLING FRAME/SLIDE | * | 1 | | | 7F | | |
| 7 | V704-140-015-00 | RING,SNAP/15 C | * | 9 | | | | | |
| 8 | 2204-513-026-00 | CAP/30X20 | * | 6 | | | | | |
| 9 | 2186-508-009-00 | CLIP,STEP MAT | * | 2 | | | | | |
| 10 | 2204-513-760-11 | ARM/SLIDER/MAIN COMP | * | 1 | | | 7F | | |
| 11 | 2204-513-780-11 | ARM/SLIDER/UPPE COMP | * | 1 | | | 7F | | |
| 12 | 2204-513-790-11 | ARM/SLIDER/LOWE COMP | * | 1 | | | 7F | | |
| 13 | 1719-630-051-00 | BUSH/15X17X25 | * | 10 | | | | | |
| 14 | 2232-513-008-00 | COVER/MOTOR/NP | * | 1 | | | | | |
| 15 | V120-366-001-60 | SCREW,SP/M6X16 | * | 2 | | | | | |
| 16 | V360-260-006-00 | NUT/WASHER/M6 | * | 2 | | | | | |
| 17 | 2204-513-025-01 | PLATE/COVER/GEAR | * | 1 | | | 7F | | |
| 18 | V210-260-601-20 | BOLT,S/M6X12 | * | 3 | | | | | |
| 19 | 2204-513-027-01 | PLATE/COVER/GEAR/S | * | 1 | | | 7F | | |
| 20 | 2194-543-200-00 | MOTER | * | 1 | | | | | |
| 21 | V120-365-001-60 | SCREW,SP/M5X16 | * | 3 | | | | | |
| 22 | 2204-530-200-00 | HARNESS/SEEDLIN ASSY | * | 1 | | | | | |
| 23 | 2204-513-028-00 | BAND/CLAMP/PUSH | * | 5 | | | | | |
| 24 | 2204-513-021-00 | SEEDLINGFRAME/SLIDER | * | 3 | | | | | |
| 25 | 2144-501-011-10 | BOLT/M6X16X16 | * | 12 | | | | | |
| 26 | 2163-870-003-10 | ROLLER44 | * | 4 | | | | | |
| 27 | 2163-870-035-20 | PIN/ROLLER | * | 4 | | | | | |
| 28 | 2204-513-630-10 | HOOK/SEEDLING BOX/SL | * | 1 | | | | | |
| 29 | 2163-526-006-00 | NUT | * | 1 | | | | | |
| 30 | 2161-513-051-10 | FRAME,SEEDLING | * | 1 | | | | | |

# FIG. 64 TRAY(SEEDLING/SUB)SYSTEM(2/2) (R TYPE EXCEPT F)

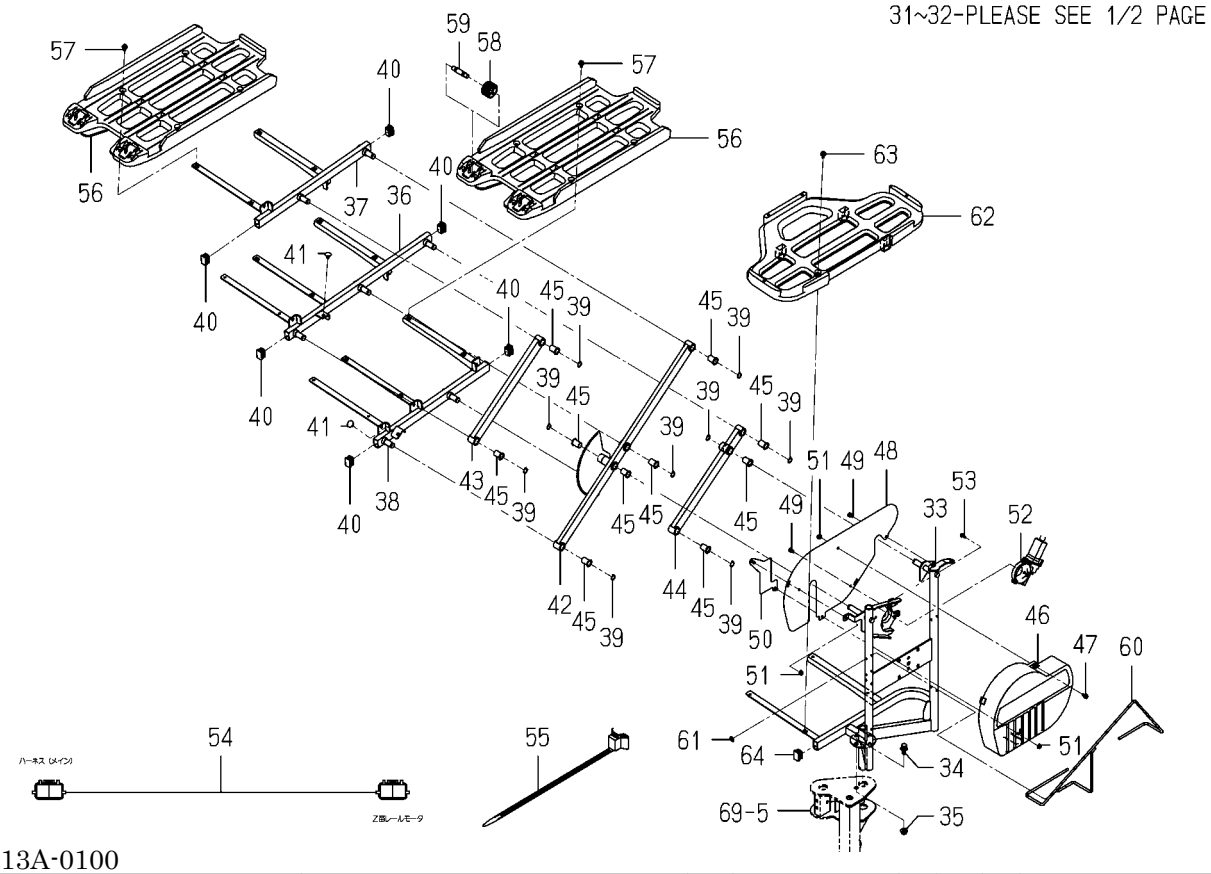


2233-513A-0100

| KEY | PART CODE | DESCRIPTION | SPC | TYPE OF MODEL NP80D E16 | | ITC | COL | GRP | REMARKS |
|---|---|---|---|---|---|---|---|---|---|
| 31 | 2144-501-011-10 | BOLT/M6X16X16 | * | 1 | | | | | |
| 32 | 2204-513-026-00 | CAP/30X20 | * | 1 | | | | | |
| 33 | 2233-513-250-00 | SEEDLING FRAME/BASE/ | * | 1 | | | 7F | | |
| 34 | V211-361-002-50 | BOLT,SP/M10X25 | * | 1 | | | | | |
| 35 | V363-260-010-00 | NUT/WASHER/M10 | * | 1 | | | | | |
| 36 | 2204-513-420-01 | SEEDLING FRAME/SLIDE | * | 1 | | | 7F | | |
| 37 | 2204-513-430-01 | SEEDLING FRAME/SLIDE | * | 1 | | | 7F | | |
| 38 | 2204-513-440-01 | SEEDLING FRAME/SLIDE | * | 1 | | | 7F | | |
| 39 | V704-140-015-00 | RING,SNAP/15 C | * | 9 | | | | | |
| 40 | 2204-513-026-00 | CAP/30X20 | * | 6 | | | | | |
| 41 | 2186-508-009-00 | CLIP,STEP MAT | * | 2 | | | | | |
| 42 | 2204-513-460-01 | ARM/SLIDER/MAIN/RH | * | 1 | | | 7F | | |
| 43 | 2204-513-780-11 | ARM/SLIDER/UPPE COMP | * | 1 | | | 7F | | |
| 44 | 2204-513-790-11 | ARM/SLIDER/LOWE COMP | * | 1 | | | 7F | | |
| 45 | 1719-630-051-00 | BUSH/15X17X25 | * | 10 | | | | | |
| 46 | 2232-513-008-00 | COVER/MOTOR/NP | * | 1 | | | | | |
| 47 | V120-366-001-60 | SCREW,SP/M6X16 | * | 1 | | | | | |
| 48 | 2213-516-002-11 | PLATE/COVER/GEAR/RH | * | 1 | | | 7F | | |
| 49 | V210-260-601-20 | BOLT,S/M6X12 | * | 2 | | | | | |
| 50 | 2204-513-470-01 | PLATE/COVER/GEAR/S | * | 1 | | | 7F | | |
| 51 | V360-260-006-00 | NUT/WASHER/M6 | * | 3 | | | | | |
| 52 | 2194-543-200-00 | MOTER | * | 1 | | | | | |
| 53 | V120-365-001-60 | SCREW,SP/M5X16 | * | 3 | | | | | |
| 54 | 2204-530-200-00 | HARNESS/SEEDLIN ASSY | * | 1 | | | | | |
| 55 | 2204-513-028-00 | BAND/CLAMP/PUSH | * | 6 | | | | | |
| 56 | 2204-513-021-00 | SEEDLINGFRAME/SLIDER | * | 3 | | | | | |
| 57 | 2144-501-011-10 | BOLT/M6X16X16 | * | 12 | | | | | |
| 58 | 2163-870-003-10 | ROLLER44 | * | 4 | | | | | |
| 59 | 2163-870-035-20 | PIN/ROLLER | * | 4 | | | | | |
| 60 | 2213-513-760-00 | HOOK/SCRAPER/8R COMP | * | 1 | | | | | |

# FIG. 64 TRAY(SEEDLING/SUB)SYSTEM(2/2) (R TYPE EXCEPT F)

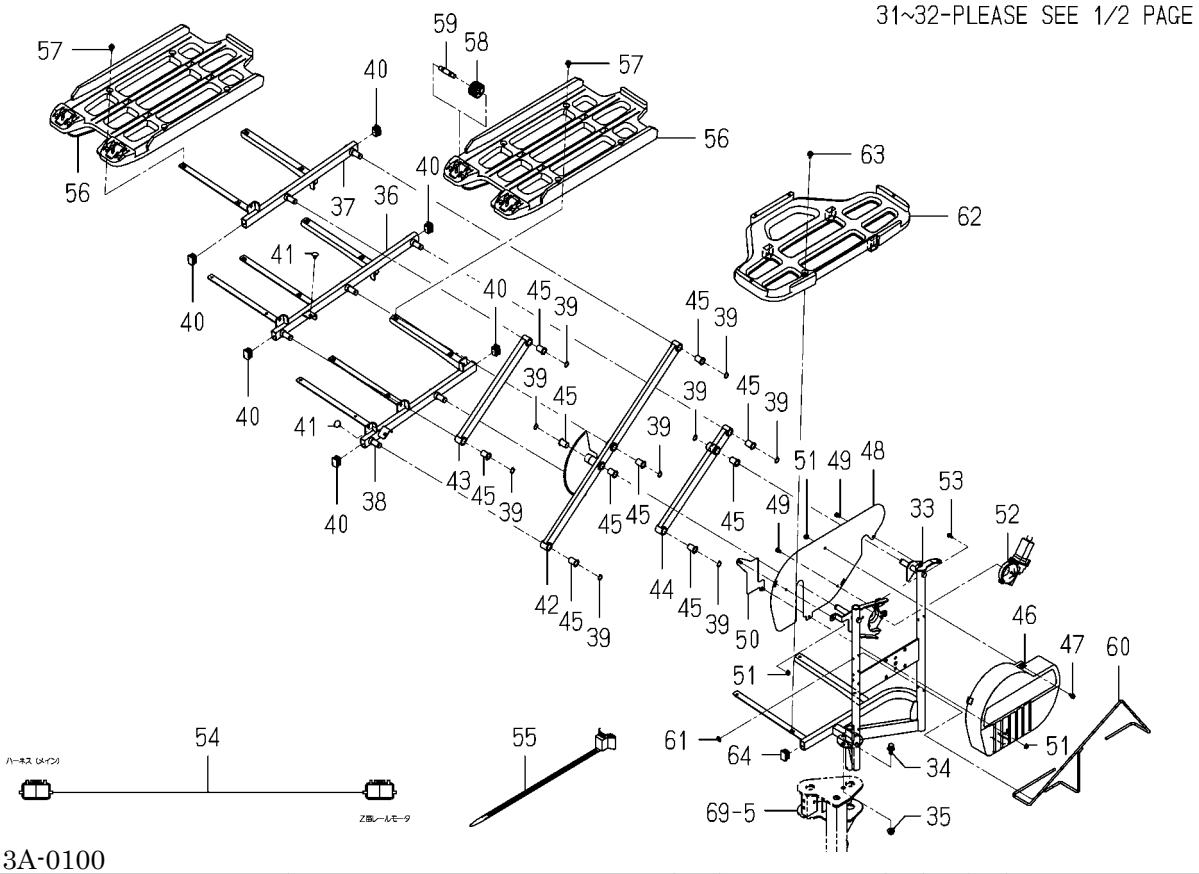


2233-513A-0100

| KEY | PART CODE | DESCRIPTION | SPC | TYPE OF MODEL NP80D E16 | | ITC | COL | GRP | REMARKS |
|---|---|---|---|---|---|---|---|---|---|
| 61 | 2163-526-006-00 | NUT | * | 1 | | | | | |
| 62 | 2161-513-051-10 | FRAME,SEEDLING | * | 1 | | | | | |
| 63 | 2144-501-011-10 | BOLT/M6X16X16 | * | 1 | | | | | |
| 64 | 2204-513-026-00 | CAP/30X20 | * | 1 | | | | | |

# FIG. 65 TRAY(SEEDLING/SUB)SYSTEM (EXCEPT R TYPE)

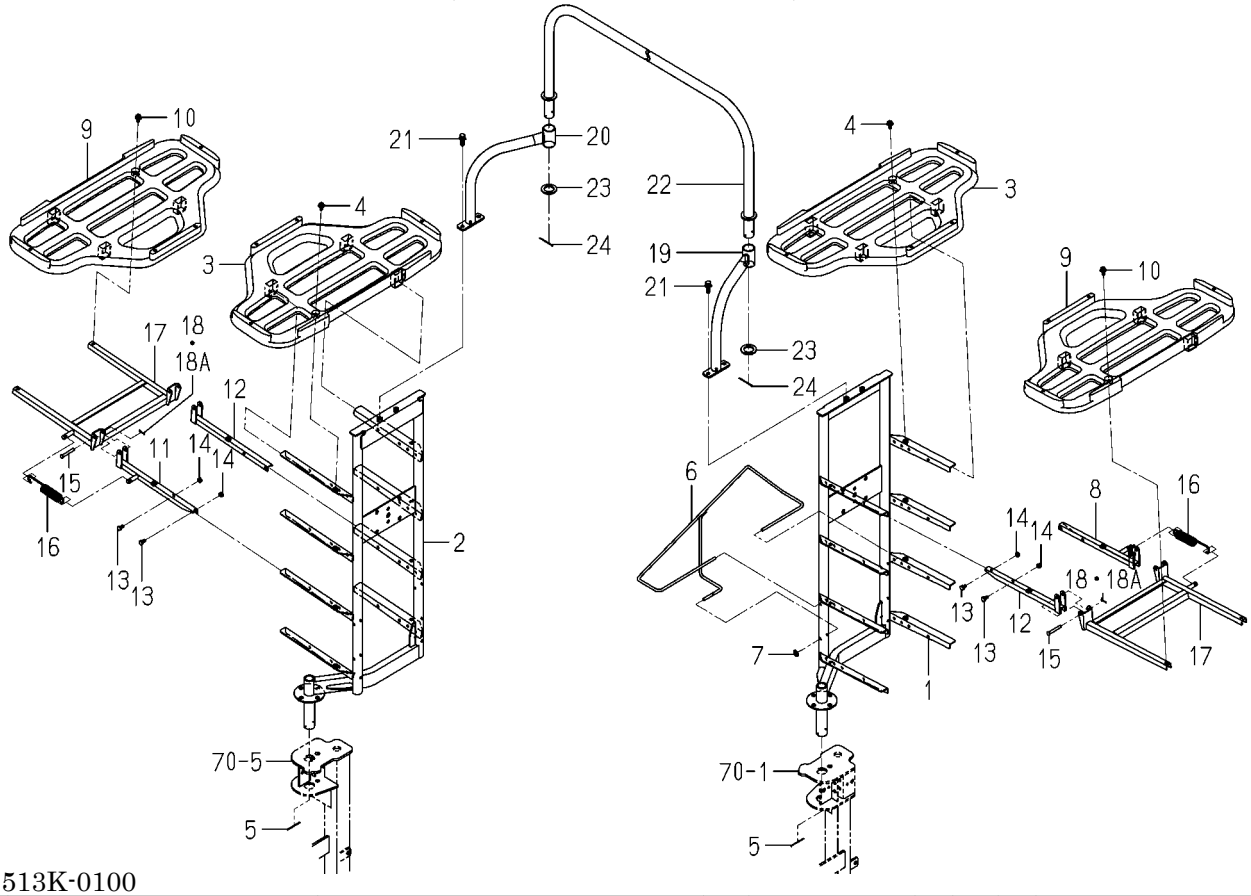


2213-513K-0100

| KEY | PART CODE | DESCRIPTION | SPC | TYPE OF MODEL NP80D E16 | | ITC | COL | GRP | REMARKS |
|---|---|---|---|---|---|---|---|---|---|
| 1 | 2213-513-520-12 | SEEDLING FRAME/4/LH/ | * | 1 | | | 7F | | |
| 2 | 2213-513-530-12 | SEEDLING FRAME/4/RH/ | * | 1 | | | 7F | | |
| 3 | 2161-513-051-10 | FRAME,SEEDLING | * | 8 | | | | | |
| 4 | 2144-501-011-10 | BOLT/M6X16X16 | * | 8 | | | | | |
| 5 | V500-163-004-00 | PIN,SPLIT/3X40 | * | 2 | | | | | |
| 6 | 2186-513-440-00 | HOOK | * | 1 | | | | | |
| 7 | 2163-526-006-00 | NUT | * | 1 | | | | | |
| 8 | 2213-586-200-11 | STAY/FRAME SUPPORT/C | * | 2 | | 1 | 5K | | |
| 9 | 2161-513-051-10 | FRAME,SEEDLING | * | 8 | | | | | |
| 10 | 2144-501-011-10 | BOLT/M6X16X16 | * | 8 | | | | | |
| 11 | 2145-586-200-13 | STAY/A | * | 6 | | | 7F | | |
| 12 | 2145-586-210-13 | STAY/B | * | 8 | | | 7F | | |
| 13 | V210-260-601-20 | BOLT,S/M6X12 | * | 32 | | | | | |
| 14 | V301-260-006-00 | NUT/M6 | * | 32 | | | | | |
| 15 | 2144-805-056-00 | PIN/06X41 | * | 16 | | | | | |
| 16 | 1575-123-002-00 | SPRING/HE130 | * | 8 | | | | | |
| 17 | 2145-586-220-03 | STAY/OUTER | * | 8 | | | 7F | | |
| 18 | 2130-601-018-00 | PIN,SNAP/6 | * | 16 -80 | | | | | |
| 18A | 2161-735-005-00 | PIN | * | 16 81- | | | | | |
| 19 | 2213-513-660-02 | STAY/UPPER/LH COMP | * | 1 | | | 7F | | |
| 20 | 2213-513-670-02 | STAY/UPPER/RH COMP | * | 1 | | | 7F | | |
| 21 | V211-360-802-50 | BOLT,SP/M8X25 | * | 4 | | | | | |
| 22 | 2213-513-610-02 | TUBE/UPPER/8A COMP | * | 1 | | | 7F | | |
| 23 | 2213-513-020-00 | WASHER/26X40X03 | * | 2 | | | | | |
| 24 | V500-163-004-00 | PIN,SPLIT/3X40 | * | 2 | | | | | |

# FIG. 66 MIRROR SYSTEM

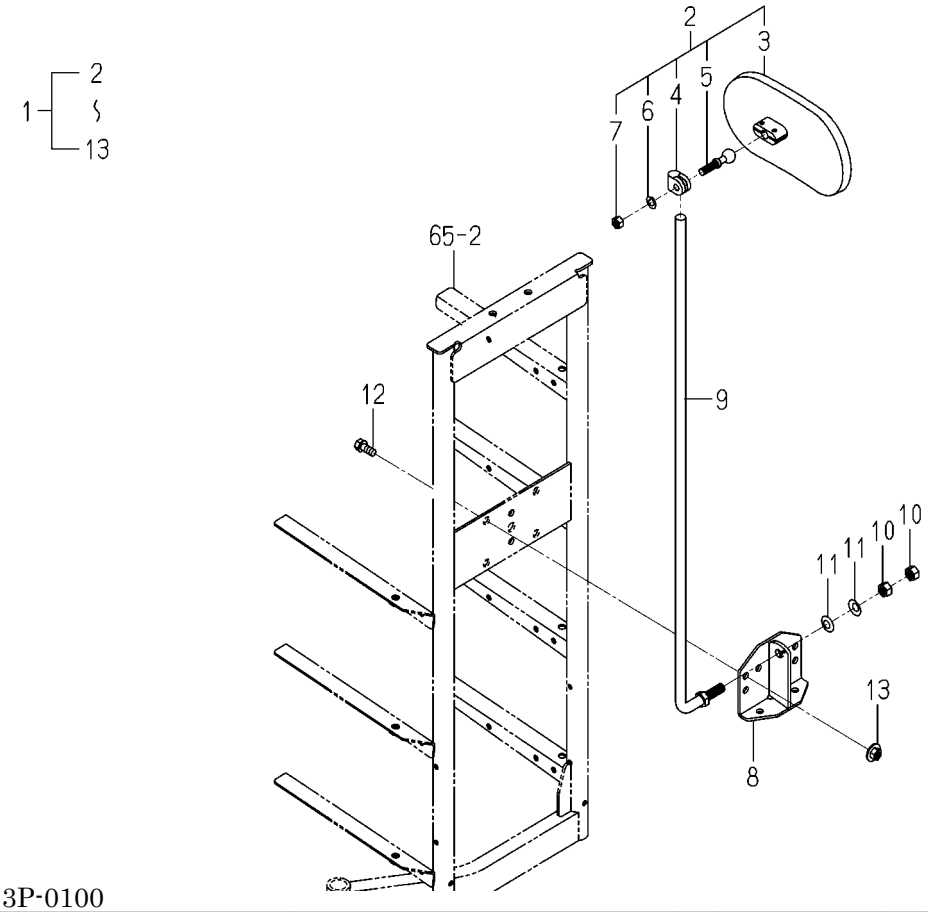


2161-513P-0100

| KEY | PART CODE | DESCRIPTION | SPC | TYPE OF MODEL NP80D E16 | | ITC | COL | GRP | REMARKS |
|---|---|---|---|---|---|---|---|---|---|
| 1 | 2161-513-850-30 | BACKMIRROR SET | * | 1 | | | | | |
| 2 | 1600-619-210-10 | MIRROR ASSY | * | 1 | | | | | |
| 3 | 1541-621-210-00 | MIRROR ASSY | * | 1 | | | | | |
| 4 | 1600-619-211-00 | STAY | * | 1 | | | | | |
| 5 | 1600-619-212-00 | PIVOT | * | 1 | | | | | |
| 6 | 1600-619-213-00 | WASHER/LOCK | * | 1 | | | | | |
| 7 | 1600-619-214-00 | NUT | * | 1 | | | | | |
| 8 | 2161-513-810-20 | PLATE/MIRROR COMP | * | 1 | | | | | |
| 9 | 2161-513-820-10 | STAY/MIRROR COMP | * | 1 | | | | | |
| 10 | V304-260-010-00 | NUT/M10 | * | 2 | | | | | |
| 11 | 2130-713-003-00 | FLAT SPRING | * | 2 | | | | | |
| 12 | V211-360-802-00 | BOLT,SP/M8X20 | * | 2 | | | | | |
| 13 | V363-260-008-00 | NUT/WASHER/M8 | * | 2 | | | | | |

# FIG. 67 TRAY(SEEDLING/SUB)SYSTEM(1/3) (RF TYPE EXCEPT Z)

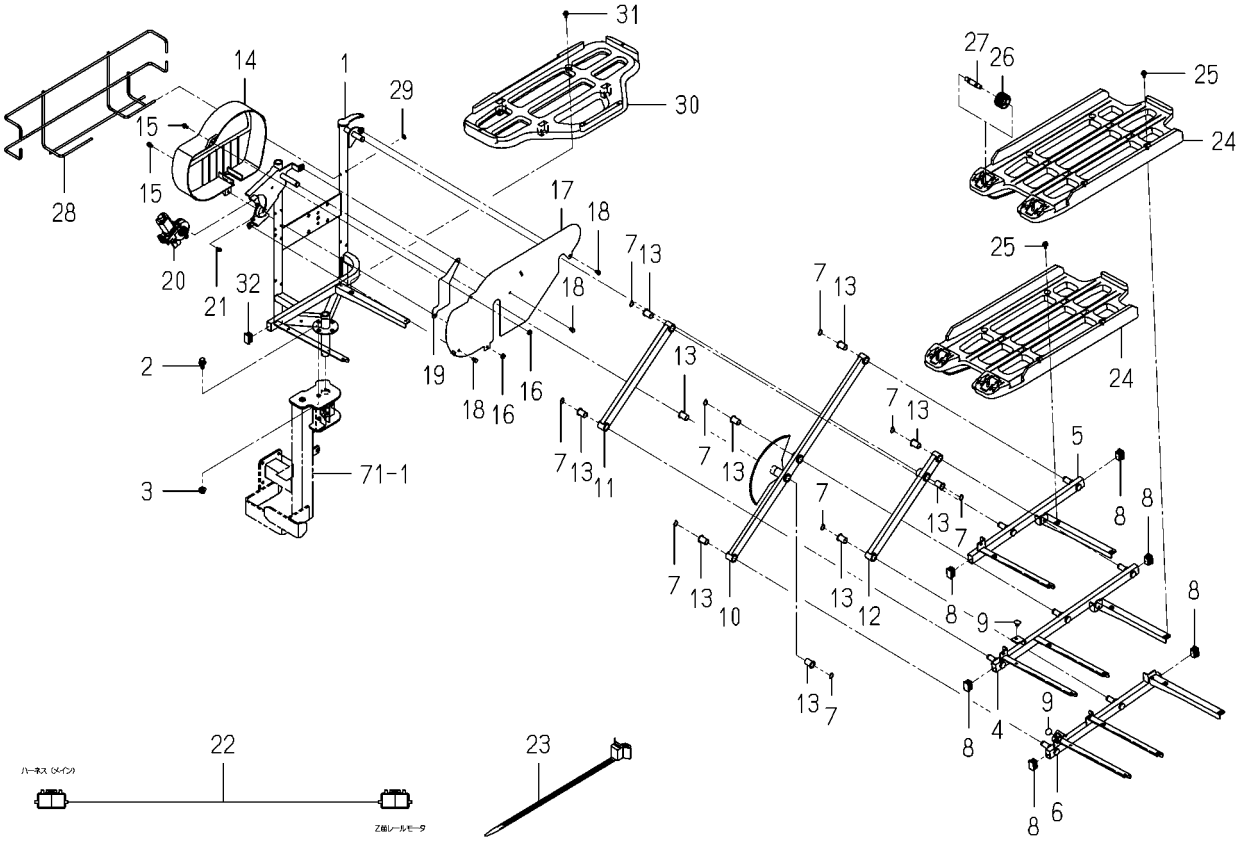


2233-513R-0100

| KEY | PART CODE | DESCRIPTION | SPC | TYPE OF MODEL NP80D | E16 | ITC | COL | GRP | REMARKS |
|---|---|---|---|---|---|---|---|---|---|
| 1 | 2233-513-200-00 | SEEDLING FRAME/BASE/ | * | 1 | | | 7F | | |
| 2 | V211-361-002-50 | BOLT,SP/M10X25 | * | 1 | | | | | |
| 3 | V363-260-010-00 | NUT/WASHER/M10 | * | 1 | | | | | |
| 4 | 2204-513-720-21 | SEEDLING FRAME/SLIDE | * | 1 | | | 7F | | |
| 5 | 2204-513-730-21 | SEEDLING FRAME/SLIDE | * | 1 | | | 7F | | |
| 6 | 2204-513-740-21 | SEEDLING FRAME/SLIDE | * | 1 | | | 7F | | |
| 7 | V704-140-015-00 | RING,SNAP/15 C | * | 9 | | | | | |
| 8 | 2204-513-026-00 | CAP/30X20 | * | 6 | | | | | |
| 9 | 2186-508-009-00 | CLIP,STEP MAT | * | 2 | | | | | |
| 10 | 2204-513-760-11 | ARM/SLIDER/MAIN COMP | * | 1 | | | 7F | | |
| 11 | 2204-513-780-11 | ARM/SLIDER/UPPE COMP | * | 1 | | | 7F | | |
| 12 | 2204-513-790-11 | ARM/SLIDER/LOWE COMP | * | 1 | | | 7F | | |
| 13 | 1719-630-051-00 | BUSH/15X17X25 | * | 10 | | | | | |
| 14 | 2232-513-008-00 | COVER/MOTOR/NP | * | 1 | | | | | |
| 15 | V120-366-001-60 | SCREW,SP/M6X16 | * | 2 | | | | | |
| 16 | V360-260-006-00 | NUT/WASHER/M6 | * | 2 | | | | | |
| 17 | 2204-513-025-01 | PLATE/COVER/GEAR | * | 1 | | | 7F | | |
| 18 | V210-260-601-20 | BOLT,S/M6X12 | * | 3 | | | | | |
| 19 | 2204-513-027-01 | PLATE/COVER/GEAR/S | * | 1 | | | 7F | | |
| 20 | 2194-543-200-00 | MOTER | * | 1 | | | | | |
| 21 | V120-365-001-60 | SCREW,SP/M5X16 | * | 3 | | | | | |
| 22 | 2204-530-200-00 | HARNESS/SEEDLIN ASSY | * | 1 | | | | | |
| 23 | 2204-513-028-00 | BAND/CLAMP/PUSH | * | 5 | | | | | |
| 24 | 2204-513-021-00 | SEEDLINGFRAME/SLIDER | * | 3 | | | | | |
| 25 | 2144-501-011-10 | BOLT/M6X16X16 | * | 12 | | | | | |
| 26 | 2163-870-003-10 | ROLLER44 | * | 4 | | | | | |
| 27 | 2163-870-035-20 | PIN/ROLLER | * | 4 | | | | | |
| 28 | 2204-513-630-10 | HOOK/SEEDLING BOX/SL | * | 1 | | | | | |
| 29 | 2163-526-006-00 | NUT | * | 1 | | | | | |
| 30 | 2161-513-051-10 | FRAME,SEEDLING | * | 1 | | | | | |

# FIG. 67 TRAY(SEEDLING/SUB)SYSTEM(2/3) (RF TYPE EXCEPT Z)

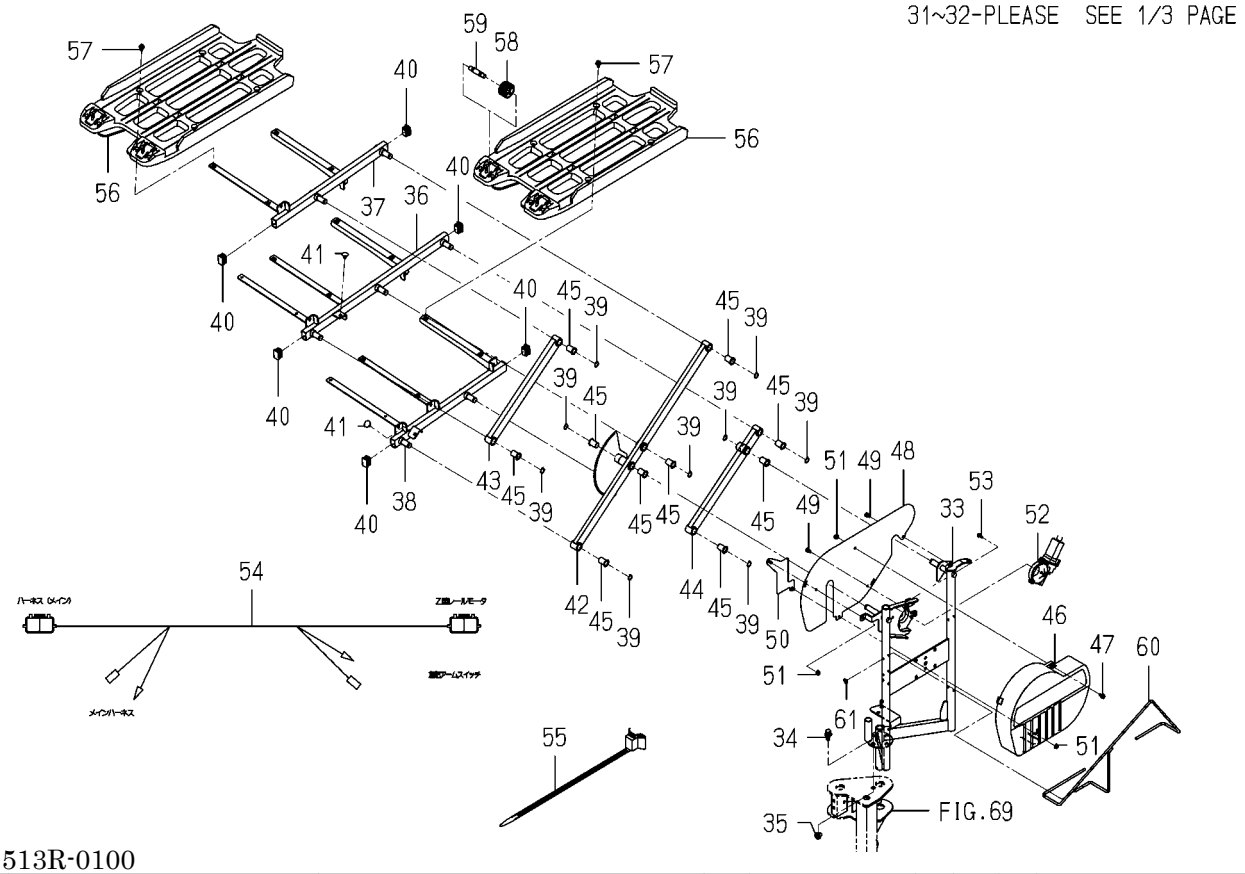


2233-513R-0100

| KEY | PART CODE | DESCRIPTION | SPC | TYPE OF MODEL NP80D E16 | | ITC | COL | GRP | REMARKS |
|---|---|---|---|---|---|---|---|---|---|
| 31 | 2144-501-011-10 | BOLT/M6X16X16 | * | 1 | | | | | |
| 32 | 2204-513-026-00 | CAP/30X20 | * | 1 | | | | | |
| 33 | 2233-513-300-10 | SEEDLING FRAME/BASE/ | * | 1 | | | 7F | | |
| 34 | V211-361-002-50 | BOLT,SP/M10X25 | * | 1 | | | | | |
| 35 | V363-260-010-00 | NUT/WASHER/M10 | * | 1 | | | | | |
| 36 | 2204-513-420-01 | SEEDLING FRAME/SLIDE | * | 1 | | | 7F | | |
| 37 | 2204-513-430-01 | SEEDLING FRAME/SLIDE | * | 1 | | | 7F | | |
| 38 | 2204-513-440-01 | SEEDLING FRAME/SLIDE | * | 1 | | | 7F | | |
| 39 | V704-140-015-00 | RING,SNAP/15 C | * | 9 | | | | | |
| 40 | 2204-513-026-00 | CAP/30X20 | * | 6 | | | | | |
| 41 | 2186-508-009-00 | CLIP,STEP MAT | * | 2 | | | | | |
| 42 | 2204-513-460-01 | ARM/SLIDER/MAIN/RH | * | 1 | | | 7F | | |
| 43 | 2204-513-780-11 | ARM/SLIDER/UPPE COMP | * | 1 | | | 7F | | |
| 44 | 2204-513-790-11 | ARM/SLIDER/LOWE COMP | * | 1 | | | 7F | | |
| 45 | 1719-630-051-00 | BUSH/15X17X25 | * | 10 | | | | | |
| 46 | 2232-513-008-00 | COVER/MOTOR/NP | * | 1 | | | | | |
| 47 | V120-366-001-60 | SCREW,SP/M6X16 | * | 1 | | | | | |
| 48 | 2213-516-002-11 | PLATE/COVER/GEAR/RH | * | 1 | | | 7F | | |
| 49 | V210-260-601-20 | BOLT,S/M6X12 | * | 2 | | | | | |
| 50 | 2204-513-470-01 | PLATE/COVER/GEAR/S | * | 1 | | | 7F | | |
| 51 | V360-260-006-00 | NUT/WASHER/M6 | * | 3 | | | | | |
| 52 | 2194-543-200-00 | MOTER | * | 1 | | | | | |
| 53 | V120-365-001-60 | SCREW,SP/M5X16 | * | 3 | | | | | |
| 54 | 2233-538-220-10 | HARNESS/FERTILIZE AR | * | 1 | | | | | |
| 55 | 2204-513-028-00 | BAND/CLAMP/PUSH | * | 6 | | | | | |
| 56 | 2204-513-021-00 | SEEDLINGFRAME/SLIDER | * | 3 | | | | | |
| 57 | 2144-501-011-10 | BOLT/M6X16X16 | * | 12 | | | | | |
| 58 | 2163-870-003-10 | ROLLER44 | * | 4 | | | | | |
| 59 | 2163-870-035-20 | PIN/ROLLER | * | 4 | | | | | |
| 60 | 2213-513-760-00 | HOOK/SCRAPER/8R COMP | * | 1 | | | | | |

# FIG. 67 TRAY(SEEDLING/SUB)SYSTEM(3/3) (RF TYPE EXCEPT Z)

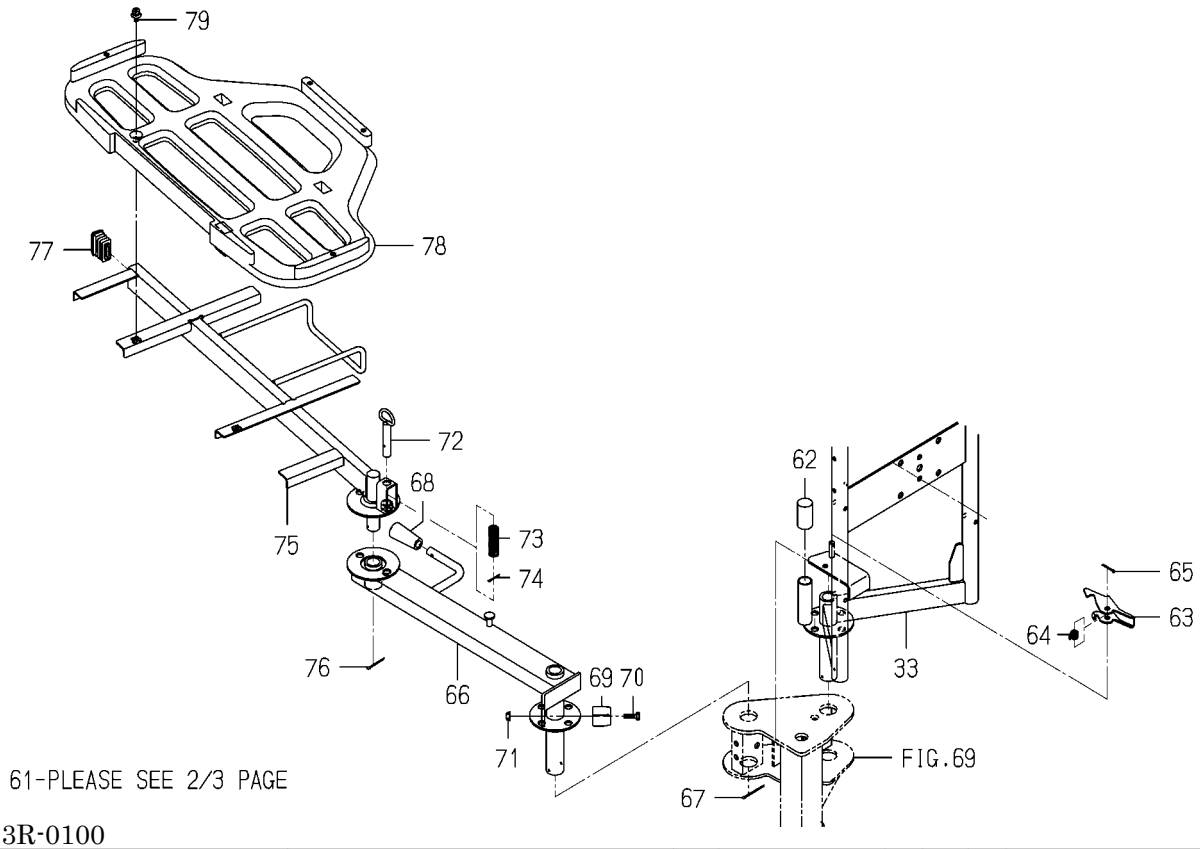


2233-513R-0100

| KEY | PART CODE | DESCRIPTION | SPC | TYPE OF MODEL NP80D E16 | | ITC | COL | GRP | REMARKS |
|---|---|---|---|---|---|---|---|---|---|
| 61 | 2163-526-006-00 | NUT | * | 1 | | | | | |
| 62 | 2232-513-001-10 | CAP/20X40 | * | 1 | | | | | |
| 63 | 2232-513-007-00 | LOCK/CARRY | * | 1 | | | | | |
| 64 | 2204-336-009-00 | SPRING/HT012 | * | 1 | | | | | |
| 65 | V500-163-002-00 | PIN,SPLIT/3X20 | * | 1 | | | | | |
| 66 | 2233-513-320-10 | ARM/HANDLING/8 COMP | * | 1 | | | 7F | | |
| 67 | V500-163-004-00 | PIN,SPLIT/3X40 | * | 1 | | | | | |
| 68 | 3659-215-003-00 | GRIP/11X60 | * | 1 | | | | | |
| 69 | 2197-803-003-00 | HOOK/RAIL | * | 1 | | | | | |
| 70 | V200-260-602-00 | BOLT/M6X20 | * | 1 | | | | | |
| 71 | V360-260-006-00 | NUT/WASHER/M6 | * | 1 | | | | | |
| 72 | 2232-513-320-00 | PIN/LOCK/CARRY COMP | * | 1 | | | | | |
| 73 | 2232-513-004-00 | SPRING/HC050 | * | 1 | | | | | |
| 74 | V500-163-002-00 | PIN,SPLIT/3X20 | * | 1 | | | | | |
| 75 | 2232-513-400-00 | BASE/HANDLING COMP | * | 1 | | | | | |
| 76 | V500-163-003-00 | PIN,SPLIT/3X30 | * | 1 | | | | | |
| 77 | 2204-513-003-00 | CAP,SEEDLING FRAME/P | * | 1 | | | | | |
| 78 | 2232-513-009-00 | BUCKET/FERTILIZE | * | 1 | | | | | |
| 79 | 2144-501-011-10 | BOLT/M6X16X16 | * | 1 | | | | | |

# FIG. 68 TRAY(SEEDLING/SUB)SYSTEM(ZRF TYPE)(1/3)

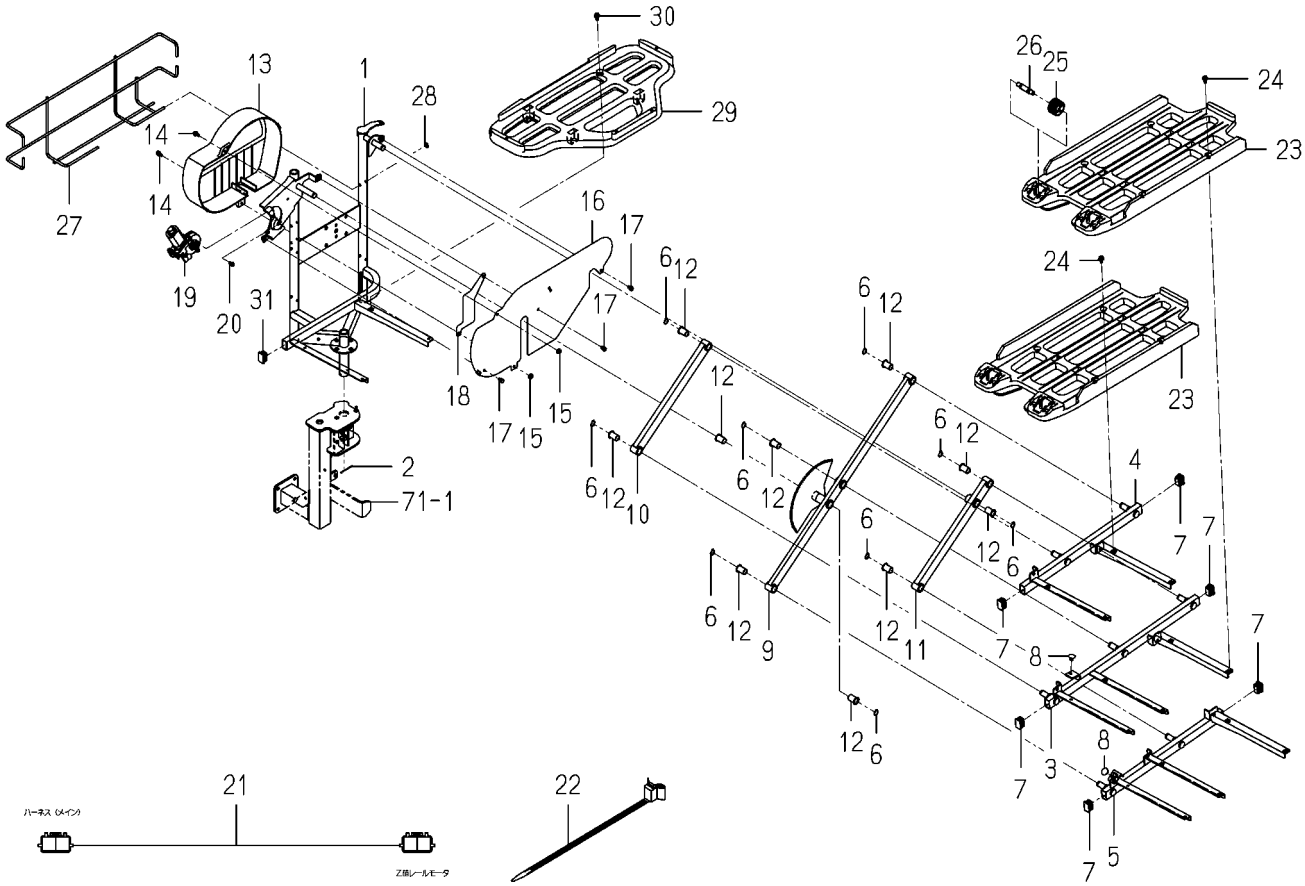


2233-513W-0100

| KEY | PART CODE | DESCRIPTION | SPC | TYPE OF MODEL NP80D | TYPE OF MODEL E16 | ITC | COL | GRP | REMARKS |
|---|---|---|---|---|---|---|---|---|---|
| 1 | 2233-513-200-00 | SEEDLING FRAME/BASE/ | * | 1 | | | 7F | | |
| 2 | V500-163-004-00 | PIN,SPLIT/3X40 | * | 1 | | | | | |
| 3 | 2204-513-720-21 | SEEDLING FRAME/SLIDE | * | 1 | | | 7F | | |
| 4 | 2204-513-730-21 | SEEDLING FRAME/SLIDE | * | 1 | | | 7F | | |
| 5 | 2204-513-740-21 | SEEDLING FRAME/SLIDE | * | 1 | | | 7F | | |
| 6 | V704-140-015-00 | RING,SNAP/15 C | * | 9 | | | | | |
| 7 | 2204-513-026-00 | CAP/30X20 | * | 6 | | | | | |
| 8 | 2186-508-009-00 | CLIP,STEP MAT | * | 2 | | | | | |
| 9 | 2204-513-760-11 | ARM/SLIDER/MAIN COMP | * | 1 | | | 7F | | |
| 10 | 2204-513-780-11 | ARM/SLIDER/UPPE COMP | * | 1 | | | 7F | | |
| 11 | 2204-513-790-11 | ARM/SLIDER/LOWE COMP | * | 1 | | | 7F | | |
| 12 | 1719-630-051-00 | BUSH/15X17X25 | * | 10 | | | | | |
| 13 | 2232-513-008-00 | COVER/MOTOR/NP | * | 1 | | | | | |
| 14 | V120-366-001-60 | SCREW,SP/M6X16 | * | 2 | | | | | |
| 15 | V360-260-006-00 | NUT/WASHER/M6 | * | 2 | | | | | |
| 16 | 2204-513-025-01 | PLATE/COVER/GEAR | * | 1 | | | 7F | | |
| 17 | V210-260-601-20 | BOLT,S/M6X12 | * | 3 | | | | | |
| 18 | 2204-513-027-01 | PLATE/COVER/GEAR/S | * | 1 | | | 7F | | |
| 19 | 2194-543-200-00 | MOTER | * | 1 | | | | | |
| 20 | V120-365-001-60 | SCREW,SP/M5X16 | * | 3 | | | | | |
| 21 | 2204-530-200-00 | HARNESS/SEEDLIN ASSY | * | 1 | | | | | |
| 22 | 2204-513-028-00 | BAND/CLAMP/PUSH | * | 5 | | | | | |
| 23 | 2204-513-021-00 | SEEDLINGFRAME/SLIDER | * | 3 | | | | | |
| 24 | 2144-501-011-10 | BOLT/M6X16X16 | * | 12 | | | | | |
| 25 | 2163-870-003-10 | ROLLER44 | * | 4 | | | | | |
| 26 | 2163-870-035-20 | PIN/ROLLER | * | 4 | | | | | |
| 27 | 2204-513-630-10 | HOOK/SEEDLING BOX/SL | * | 1 | | | | | |
| 28 | 2163-526-006-00 | NUT | * | 1 | | | | | |
| 29 | 2161-513-051-10 | FRAME,SEEDLING | * | 1 | | | | | |
| 30 | 2144-501-011-10 | BOLT/M6X16X16 | * | 1 | | | | | |

# FIG. 68 TRAY(SEEDLING/SUB)SYSTEM(ZRF TYPE)(2/3)

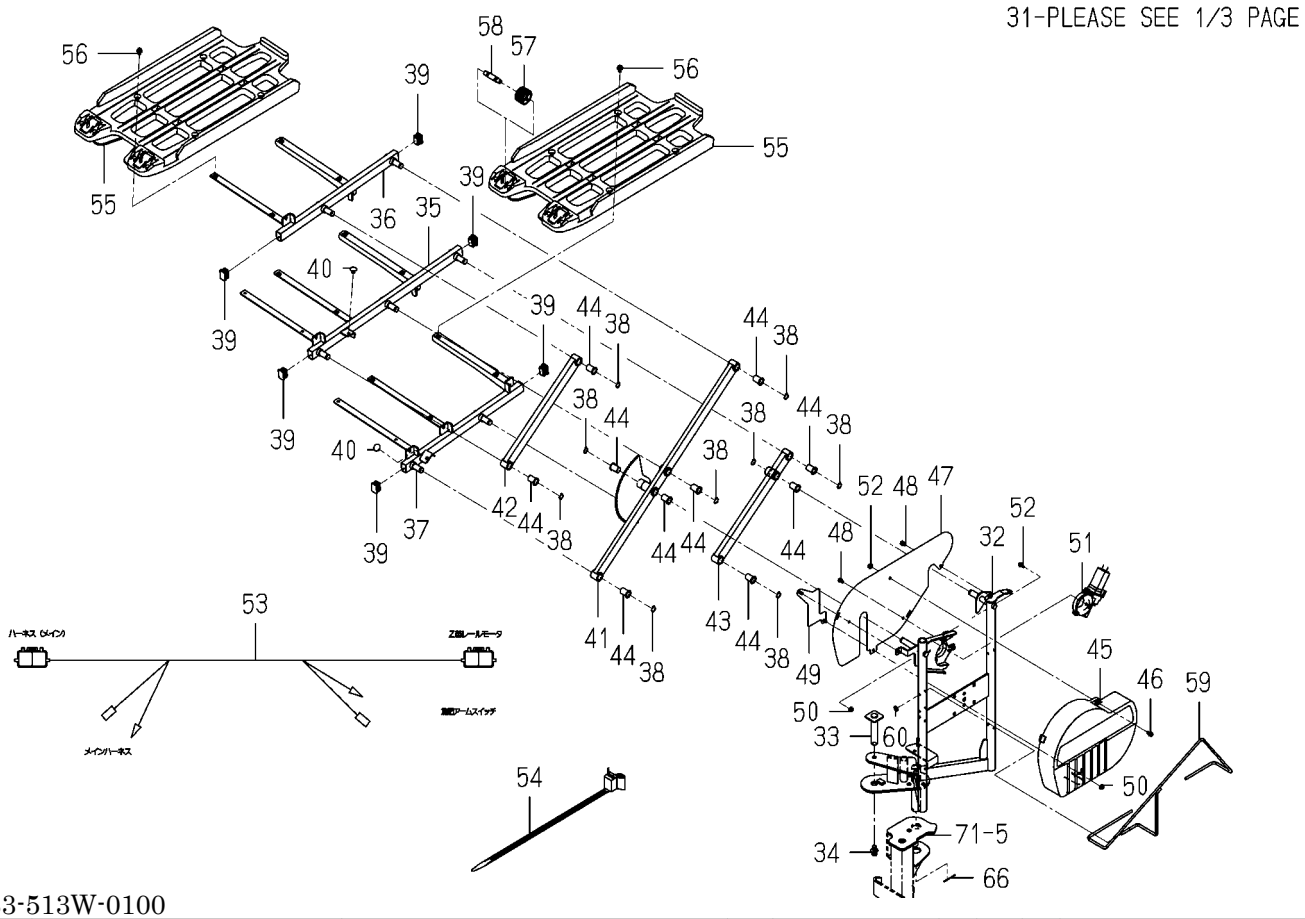


2233-513W-0100

| KEY | PART CODE | DESCRIPTION | SPC | TYPE OF MODEL NP80D E16 | | ITC | COL | GRP | REMARKS |
|---|---|---|---|---|---|---|---|---|---|
| 31 | 2204-513-026-00 | CAP/30X20 | * | 1 | | | | | |
| 32 | 2233-513-370-10 | SEEDLING FRAME/MASE/ | * | 1 | | | | | |
| 33 | 2233-513-380-20 | PIN/19X93 | * | 1 | | | | | |
| 34 | V211-361-002-00 | BOLT,SP/M10X20 | * | 1 | | | | | |
| 35 | 2204-513-420-01 | SEEDLING FRAME/SLIDE | * | 1 | | | 7F | | |
| 36 | 2204-513-430-01 | SEEDLING FRAME/SLIDE | * | 1 | | | 7F | | |
| 37 | 2204-513-440-01 | SEEDLING FRAME/SLIDE | * | 1 | | | 7F | | |
| 38 | V704-140-015-00 | RING,SNAP/15 C | * | 9 | | | | | |
| 39 | 2204-513-026-00 | CAP/30X20 | * | 6 | | | | | |
| 40 | 2186-508-009-00 | CLIP,STEP MAT | * | 2 | | | | | |
| 41 | 2204-513-460-01 | ARM/SLIDER/MAIN/RH | * | 1 | | | 7F | | |
| 42 | 2204-513-780-11 | ARM/SLIDER/UPPE COMP | * | 1 | | | 7F | | |
| 43 | 2204-513-790-11 | ARM/SLIDER/LOWE COMP | * | 1 | | | 7F | | |
| 44 | 1719-630-051-00 | BUSH/15X17X25 | * | 10 | | | | | |
| 45 | 2232-513-008-00 | COVER/MOTOR/NP | * | 1 | | | | | |
| 46 | V120-366-001-60 | SCREW,SP/M6X16 | * | 1 | | | | | |
| 47 | 2213-516-002-11 | PLATE/COVER/GEAR/RH | * | 1 | | | 7F | | |
| 48 | V210-260-601-20 | BOLT,S/M6X12 | * | 2 | | | | | |
| 49 | 2204-513-470-01 | PLATE/COVER/GEAR/S | * | 1 | | | 7F | | |
| 50 | V360-260-006-00 | NUT/WASHER/M6 | * | 3 | | | | | |
| 51 | 2194-543-200-00 | MOTER | * | 1 | | | | | |
| 52 | V120-365-001-60 | SCREW,SP/M5X16 | * | 3 | | | | | |
| 53 | 2233-538-220-10 | HARNESS/FERTILIZE AR | * | 1 | | | | | |
| 54 | 2204-513-028-00 | BAND/CLAMP/PUSH | * | 6 | | | | | |
| 55 | 2204-513-021-00 | SEEDLINGFRAME/SLIDER | * | 3 | | | | | |
| 56 | 2144-501-011-10 | BOLT/M6X16X16 | * | 12 | | | | | |
| 57 | 2163-870-003-10 | ROLLER44 | * | 4 | | | | | |
| 58 | 2163-870-035-20 | PIN/ROLLER | * | 4 | | | | | |
| 59 | 2213-513-760-00 | HOOK/SCRAPER/8R COMP | * | 1 | | | | | |
| 60 | 2163-526-006-00 | NUT | * | 1 | | | | | |

# FIG. 68 TRAY(SEEDLING/SUB)SYSTEM(ZRF TYPE)(3/3)

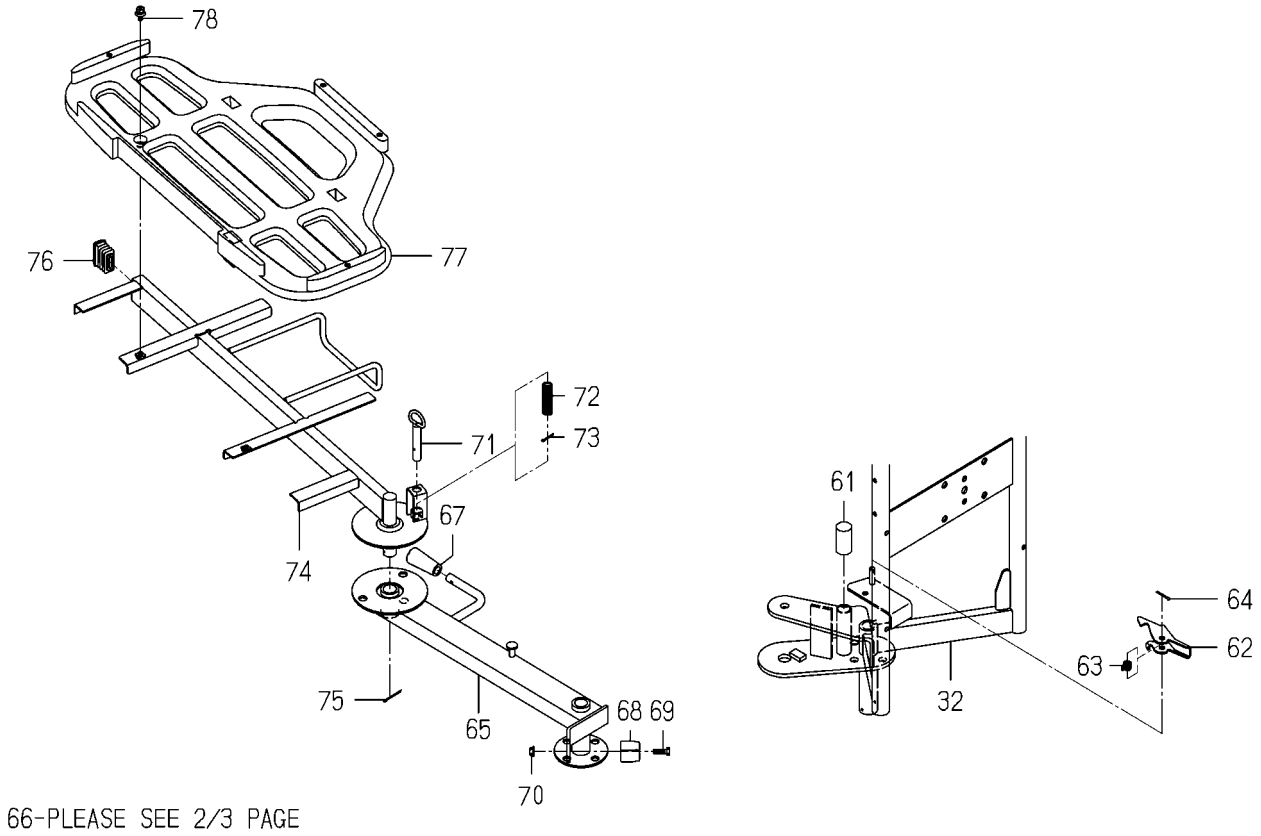


2233-513W-0100

| KEY | PART CODE | DESCRIPTION | SPC | TYPE OF MODEL NP80D E16 | | ITC | COL | GRP | REMARKS |
|---|---|---|---|---|---|---|---|---|---|
| 61 | 2232-513-001-10 | CAP/20X40 | * | 1 | | | | | |
| 62 | 2232-513-007-00 | LOCK/CARRY | * | 1 | | | | | |
| 63 | 2204-336-009-00 | SPRING/HT012 | * | 1 | | | | | |
| 64 | V500-163-002-00 | PIN,SPLIT/3X20 | * | 1 | | | | | |
| 65 | 2233-513-350-00 | ARM/HANDLING/8Z COMP | * | 1 | | | | | |
| 66 | V500-163-004-00 | PIN,SPLIT/3X40 | * | 1 | | | | | |
| 67 | 3659-215-003-00 | GRIP/11X60 | * | 1 | | | | | |
| 68 | 2197-803-003-00 | HOOK/RAIL | * | 1 | | | | | |
| 69 | V200-260-602-00 | BOLT/M6X20 | * | 1 | | | | | |
| 70 | V360-260-006-00 | NUT/WASHER/M6 | * | 1 | | | | | |
| 71 | 2232-513-320-00 | PIN/LOCK/CARRY COMP | * | 1 | | | | | |
| 72 | 2232-513-004-00 | SPRING/HC050 | * | 1 | | | | | |
| 73 | V500-163-002-00 | PIN,SPLIT/3X20 | * | 1 | | | | | |
| 74 | 2233-513-420-00 | BASE/HANDLING COMP | * | 1 | | | | | |
| 75 | V500-163-003-00 | PIN,SPLIT/3X30 | * | 1 | | | | | |
| 76 | 2204-513-003-00 | CAP,SEEDLING FRAME/P | * | 1 | | | | | |
| 77 | 2232-513-009-00 | BUCKET/FERTILIZE | * | 1 | | | | | |
| 78 | 2144-501-011-10 | BOLT/M6X16X16 | * | 1 | | | | | |

# FIG. 69 STAY(FRAME/SEEDLING/SUB)SYSTEM (R TYPE EXCEPT Z)

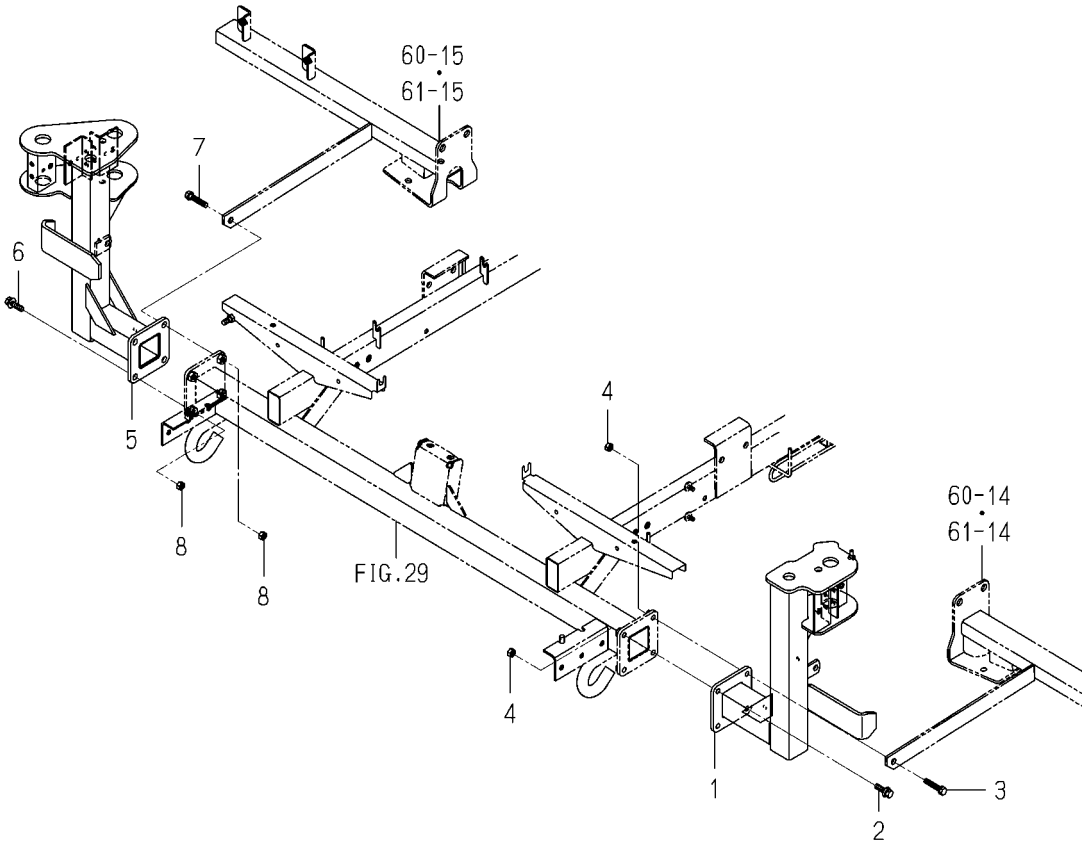


2233-514 -0100

| KEY | PART CODE | DESCRIPTION | SPC | TYPE OF MODEL NP80D | E16 | ITC | COL | GRP | REMARKS |
|---|---|---|---|---|---|---|---|---|---|
| 1 | 2233-514-200-20 | STAY/SEEDLING FRAME/ | * | 1 | | | 7F | | |
| 2 | V211-560-803-00 | BOLT,S/M8X30/7T | * | 3 | | | | | |
| 3 | V211-560-803-50 | BOLT,S/M8X35/7T | * | 1 | | | | | |
| 4 | V304-260-008-00 | NUT/M8 | * | 4 | | | | | |
| 5 | 2233-514-300-20 | STAY/SEEDLING FRAME/ | * | 1 | | | 7F | | |
| 6 | V211-560-803-00 | BOLT,S/M8X30/7T | * | 3 | | | | | |
| 7 | V211-560-803-50 | BOLT,S/M8X35/7T | * | 1 | | | | | |
| 8 | V304-260-008-00 | NUT/M8 | * | 4 | | | | | |

# FIG. 70 STAY(FRAME/SEEDLING/SUB)SYSTEM (EXCEPT R TYPE)

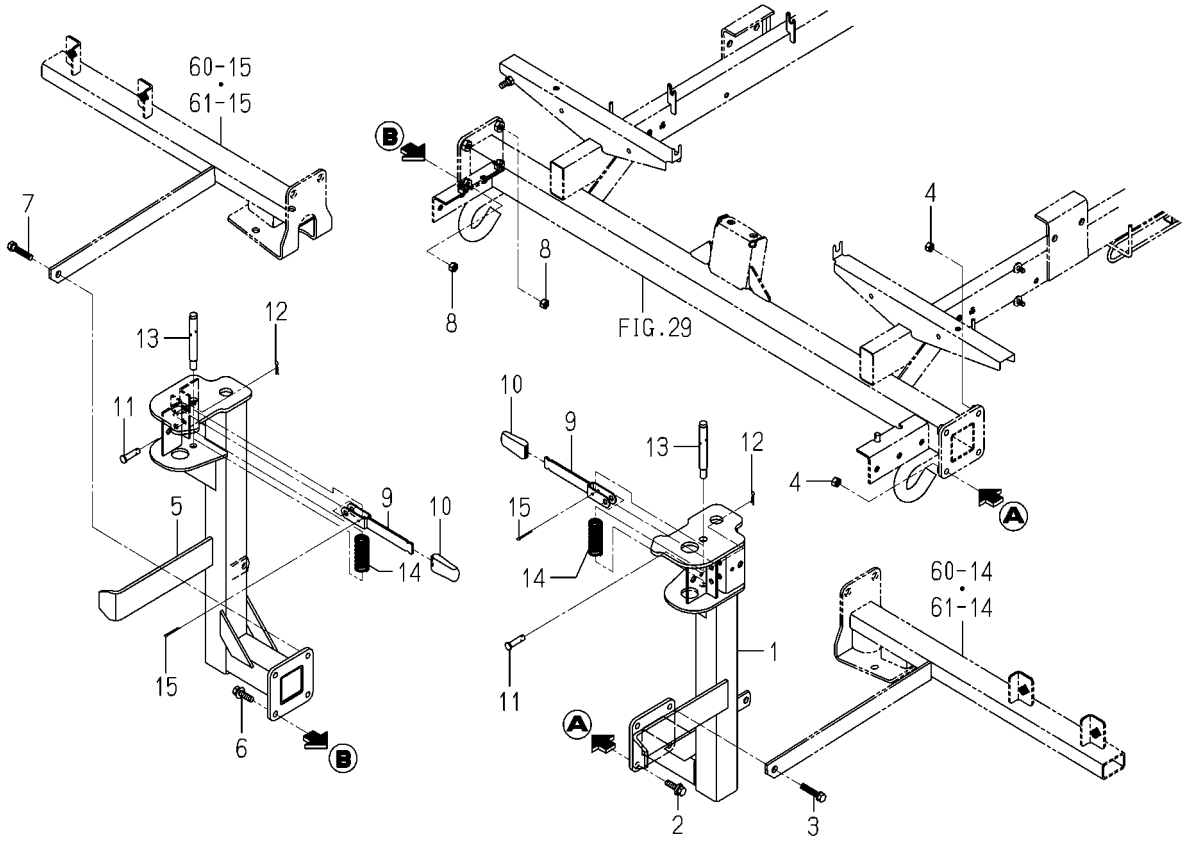


2233-514C-0100

| KEY | PART CODE | DESCRIPTION | SPC | TYPE OF MODEL NP80D E16 | | ITC | COL | GRP | REMARKS |
|---|---|---|---|---|---|---|---|---|---|
| 1 | 2233-514-230-10 | STAY/SEEDLING FRAME/ | * | 1 | | | 7F | | |
| 2 | V211-560-803-00 | BOLT,S/M8X30/7T | * | 3 | | | | | |
| 3 | V211-560-803-50 | BOLT,S/M8X35/7T | * | 1 | | | | | |
| 4 | V304-260-008-00 | NUT/M8 | * | 4 | | | | | |
| 5 | 2233-514-330-10 | STAY/SEEDLING FRAME/ | * | 1 | | | 7F | | |
| 6 | V211-560-803-00 | BOLT,S/M8X30/7T | * | 3 | | | | | |
| 7 | V211-560-803-50 | BOLT,S/M8X35/7T | * | 1 | | | | | |
| 8 | V304-260-008-00 | NUT/M8 | * | 4 | | | | | |
| 9 | 2204-514-210-00 | LEVER | * | 2 | | | | | |
| 10 | 2145-751-004-00 | GRIP | * | 2 | | | | | |
| 11 | 2175-325-007-00 | PIN/08X32 | * | 2 | | | | | |
| 12 | 3908-170-020-00 | PIN/SNAP/08 | * | 2 | | | | | |
| 13 | 2204-514-003-00 | PIN/12X100 | * | 2 | | | | | |
| 14 | 2798-102-002-00 | SPRING | * | 2 | | | | | |
| 15 | V500-163-002-50 | PIN,SPLIT/3X25 | * | 2 | | | | | |

# FIG. 71 STAY(FRAME/SEEDLING/SUB)SYSTEM (ZRF TYPE)

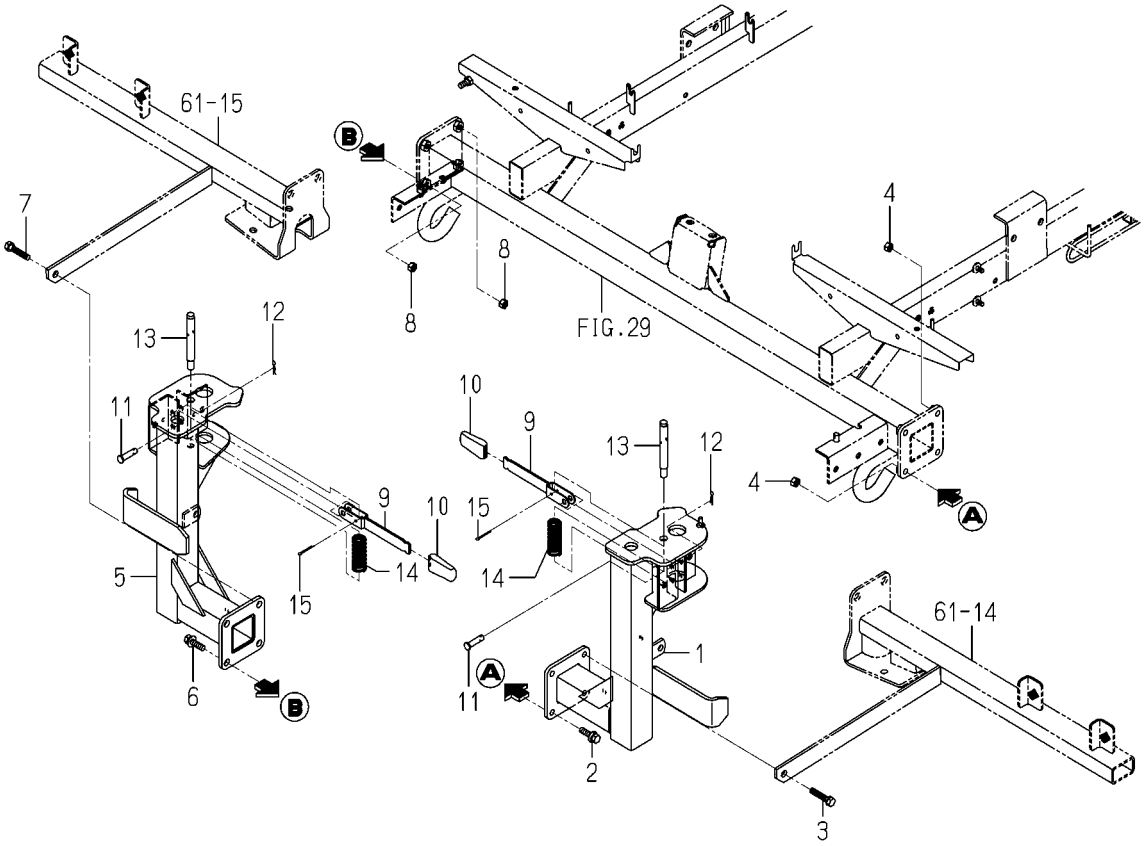


2233-514H-0100

| KEY | PART CODE | DESCRIPTION | SPC | TYPE OF MODEL NP80D | E16 | ITC | COL | GRP | REMARKS |
|---|---|---|---|---|---|---|---|---|---|
| 1 | 2233-514-200-20 | STAY/SEEDLING FRAME/ | * | 1 | | | 7F | | |
| 2 | V211-560-803-00 | BOLT,S/M8X30/7T | * | 3 | | | | | |
| 3 | V211-560-803-50 | BOLT,S/M8X35/7T | * | 1 | | | | | |
| 4 | V304-260-008-00 | NUT/M8 | * | 4 | | | | | |
| 5 | 2233-514-610-30 | STAY/SEEDLING FRAME/ | * | 1 | | | 7F | | |
| 6 | V211-560-803-00 | BOLT,S/M8X30/7T | * | 3 | | | | | |
| 7 | V211-560-803-50 | BOLT,S/M8X35/7T | * | 1 | | | | | |
| 8 | V304-260-008-00 | NUT/M8 | * | 4 | | | | | |
| 9 | 2204-514-210-00 | LEVER | * | 2 | | | | | |
| 10 | 2145-751-004-00 | GRIP | * | 2 | | | | | |
| 11 | 2175-325-007-00 | PIN/08X32 | * | 2 | | | | | |
| 12 | 3908-170-020-00 | PIN/SNAP/08 | * | 2 | | | | | |
| 13 | 2204-514-003-00 | PIN/12X100 | * | 2 | | | | | |
| 14 | 2798-102-002-00 | SPRING | * | 2 | | | | | |
| 15 | V500-163-002-50 | PIN,SPLIT/3X25 | * | 2 | | | | | |

# FIG. 72 EXTENSION(SEEDLING)SYSTEM(Z TYPE)

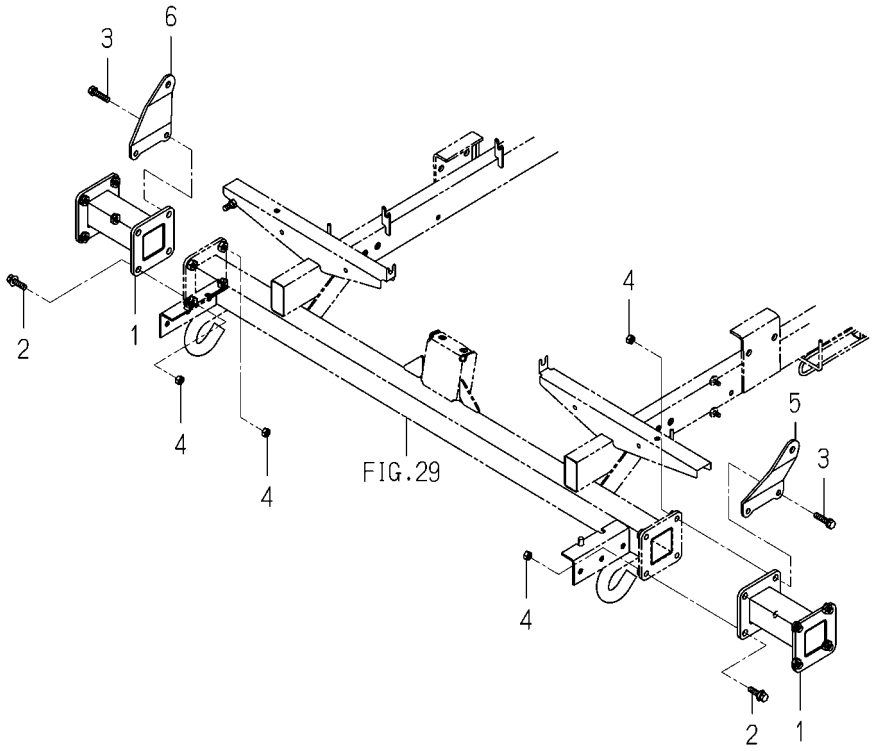


2233-515 -0100

| KEY | PART CODE | DESCRIPTION | SPC | TYPE OF MODEL NP80D E16 | | ITC | COL | GRP | REMARKS |
|---|---|---|---|---|---|---|---|---|---|
| 1 | 2233-515-220-00 | SPACER/136 COMP | * | 2 | | | | | |
| 2 | V211-560-803-00 | BOLT,S/M8X30/7T | * | 4 | | | | | |
| 3 | V211-560-803-50 | BOLT,S/M8X35/7T | * | 4 | | | | | |
| 4 | V304-260-008-00 | NUT/M8 | * | 8 | | | | | |
| 5 | 2233-515-011-00 | PLATE/SPACER/LH | * | 1 | | | | | |
| 6 | 2233-515-012-00 | PLATE/SPACER/RH | * | 1 | | | | | |

# FIG. 73 SEAT SYSTEM

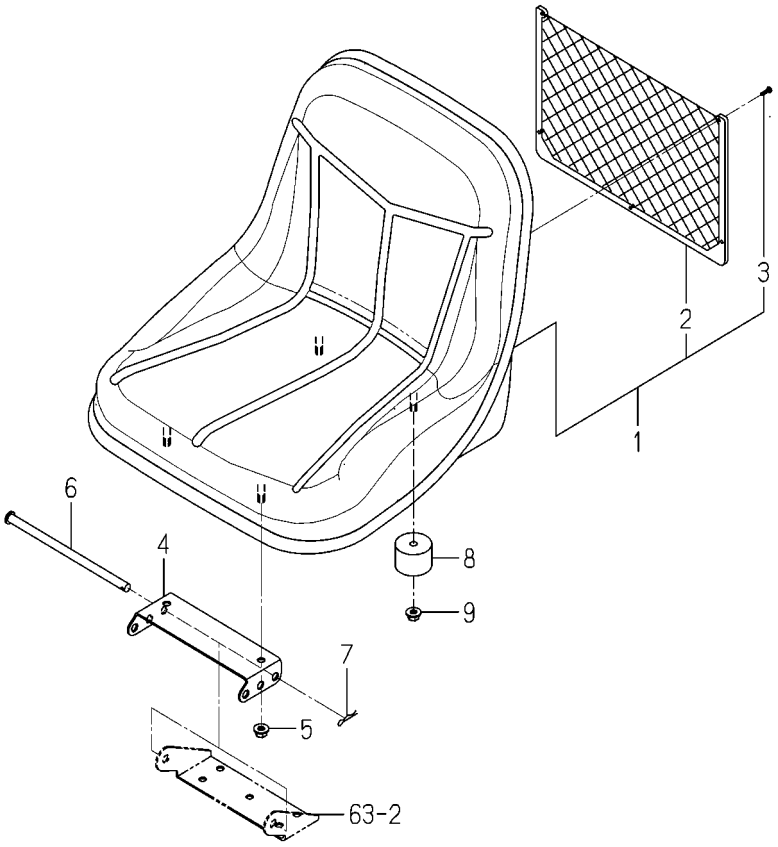


2232-517 -0100

| KEY | PART CODE | DESCRIPTION | SPC | TYPE OF MODEL NP80D | E16 | ITC | COL | GRP | REMARKS |
|---|---|---|---|---|---|---|---|---|---|
| 1 | 2232-517-200-00 | SEAT/NP ASSY | * | 1 | | | | | |
| 2 | 2213-517-201-00 | NETPOCKET | * | 1 | | | | | |
| 3 | V195-164-012-10 | SCREW/TAPPING | * | 5 | | | | | |
| 4 | 2213-517-003-10 | PLATE/SEAT/PZ/8 | * | 1 | | | | | |
| 5 | V362-260-008-00 | NUT/WASHER/M8 | * | 2 | | | | | |
| 6 | 1488-611-003-10 | PIN,SEAT SET | * | 1 | | | | | |
| 7 | 3505-704-003-00 | PIN,HAIR (10) | * | 1 | | | | | |
| 8 | 2232-517-001-00 | CUSHION/SEAT/NP | * | 2 | | | | | |
| 9 | V362-260-008-00 | NUT/WASHER/M8 | * | 2 | | | | | |

# FIG. 74 HANDRAIL SYSTEM(F TYPE)

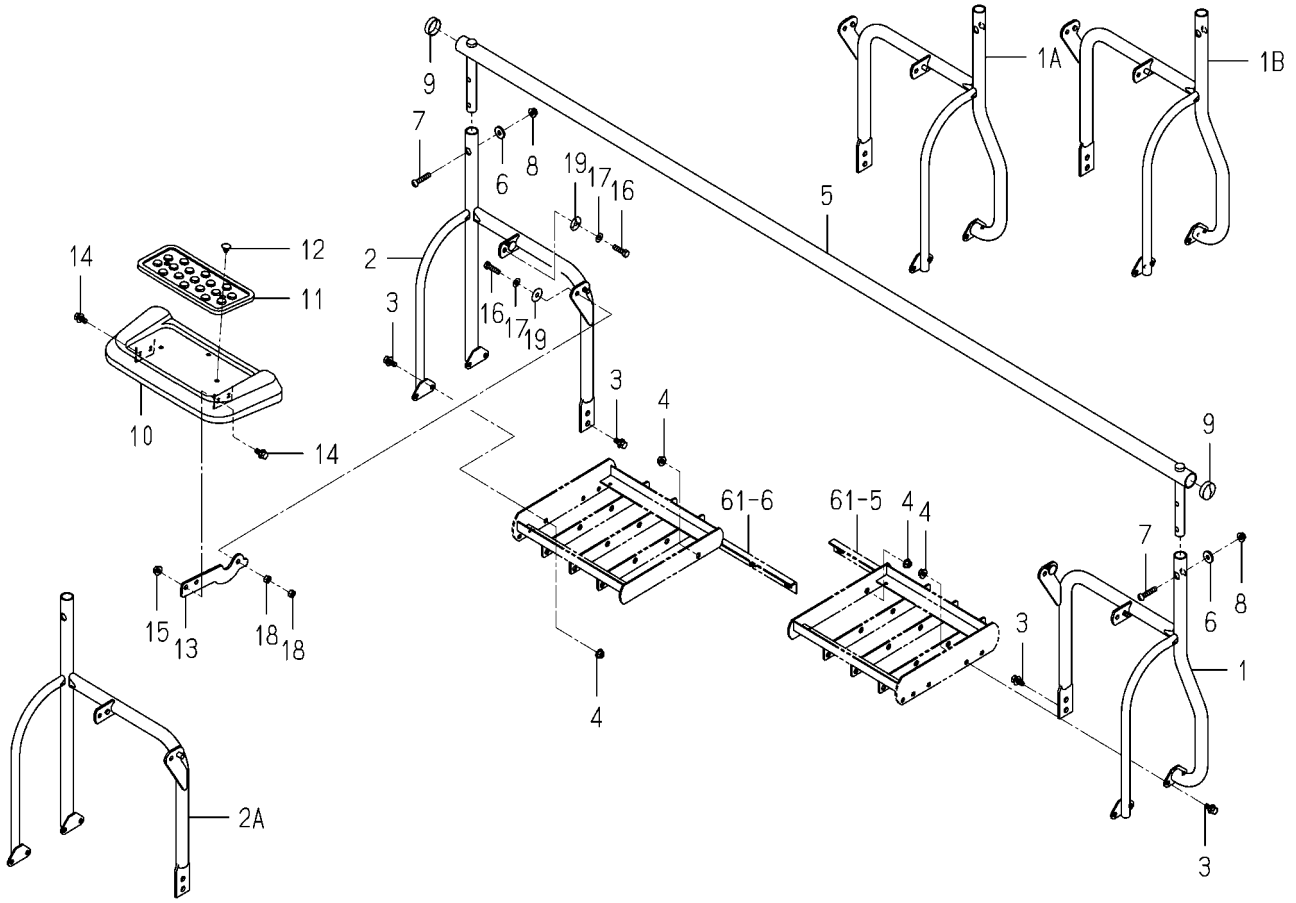


2233-520A-0100

| KEY | PART CODE | DESCRIPTION | SPC | TYPE OF MODEL NP80D E16 | | ITC | COL | GRP | REMARKS |
|---|---|---|---|---|---|---|---|---|---|
| 1 | 2233-520-330-00 | FRAME/HANDRAIL/F/LH/ | * | 1 -80 | | | 5K | | |
| 1A | 2233-520-330-10 | FRAME/HANDRAIL/F/LH/ | * | 1 -275 | | 1 | 5K | | |
| 1B | 2233-520-330-20 | FRAME/HANDRAIL/F/LH/ | * | 1 276- | | 1 | 5K | | |
| 2 | 2233-520-340-00 | FRAME/HANDRAIL/F/RH/ | * | 1 -80 | | | 5K | | |
| 2A | 2233-520-340-10 | FRAME/HANDRAIL/F/RH/ | * | 1 81- | | 1 | 5K | | |
| 3 | V211-360-802-00 | BOLT,SP/M8X20 | * | 10 | | | | | |
| 4 | V362-260-008-00 | NUT/WASHER/M8 | * | 10 | | | | | |
| 5 | 2233-520-220-00 | TUBE/HANDRAIL/N COMP | * | 1 | | | 5K | | |
| 6 | 2130-407-003-00 | WASHER | * | 2 | | | | | |
| 7 | V111-168-003-50 | SCREW/M8X35 | * | 2 | | | | | |
| 8 | V362-260-008-00 | NUT/WASHER/M8 | * | 2 | | | | | |
| 9 | 2186-320-001-00 | CAP | * | 2 | | | | | |
| 10 | 2157-510-710-11 | REAR STEP | * | 2 | | | 5K | | |
| 11 | 2157-510-071-10 | MAT,REAR STEP | * | 2 | | | | | |
| 12 | 1566-705-006-00 | CAP/08 | * | 4 | | | | | |
| 13 | 2233-520-001-00 | PLATE/ARM/SUBSTEP | * | 4 | | | | | |
| 14 | V211-360-802-00 | BOLT,SP/M8X20 | * | 8 | | | | | |
| 15 | V362-260-008-00 | NUT/WASHER/M8 | * | 8 | | | | | |
| 16 | V201-260-803-00 | BOLT/M8X30 | * | 4 | | | | | |
| 17 | V411-260-008-00 | WASHER,PL/M8 | * | 4 | | | | | |
| 18 | V304-260-008-00 | NUT/M8 | * | 8 | | | | | |
| 19 | 4141-403-283-00 | WASHER/09X28X02 | * | 4 81- | | | | | |

# FIG. 75 HANDRAIL SYSTEM(EXCEPT F TYPE)

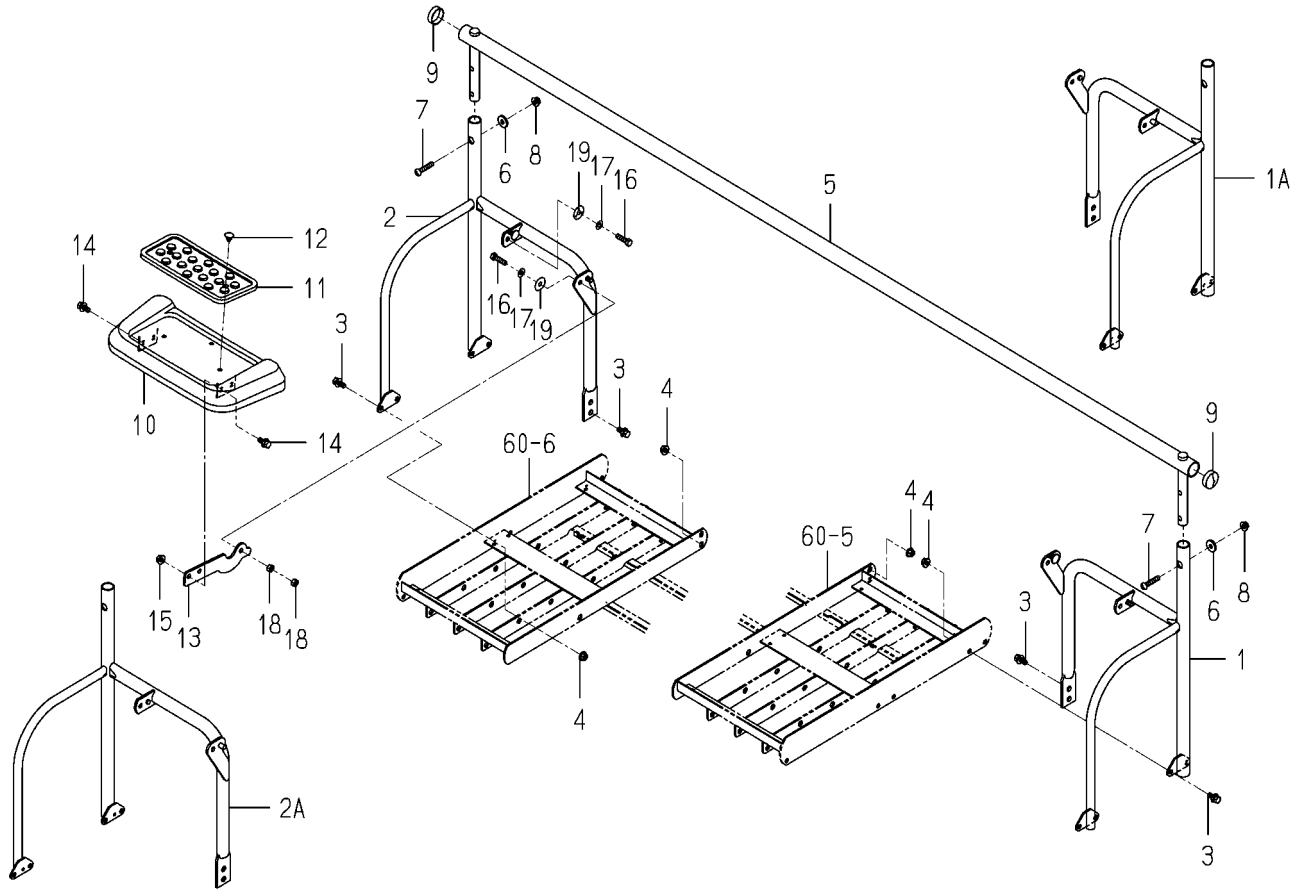


2233-520B-0100

| KEY | PART CODE | DESCRIPTION | SPC | TYPE OF MODEL NP80D E16 | | ITC | COL | GRP | REMARKS |
|---|---|---|---|---|---|---|---|---|---|
| 1 | 2233-520-300-00 | FRAME/HANDRAIL/LH/AS | * | 1 -80 | | | 5K | | |
| 1A | 2233-520-300-10 | FRAME/HANDRAIL/LH/AS | * | 1 81- | | 1 | 5K | | |
| 2 | 2233-520-310-00 | FRAME/HANDRAIL/RH/AS | * | 1 -80 | | | 5K | | |
| 2A | 2233-520-310-10 | FRAME/HANDRAIL/RH/AS | * | 1 81- | | 1 | 5K | | |
| 3 | V211-360-802-00 | BOLT,SP/M8X20 | * | 12 | | | | | |
| 4 | V362-260-008-00 | NUT/WASHER/M8 | * | 12 | | | | | |
| 5 | 2233-520-220-00 | TUBE/HANDRAIL/N COMP | * | 1 | | | 5K | | |
| 6 | 2130-407-003-00 | WASHER | * | 2 | | | | | |
| 7 | V111-168-003-50 | SCREW/M8X35 | * | 2 | | | | | |
| 8 | V362-260-008-00 | NUT/WASHER/M8 | * | 2 | | | | | |
| 9 | 2186-320-001-00 | CAP | * | 2 | | | | | |
| 10 | 2157-510-710-11 | REAR STEP | * | 2 | | | 5K | | |
| 11 | 2157-510-071-10 | MAT,REAR STEP | * | 2 | | | | | |
| 12 | 1566-705-006-00 | CAP/08 | * | 4 | | | | | |
| 13 | 2233-520-001-00 | PLATE/ARM/SUBSTEP | * | 4 | | | | | |
| 14 | V211-360-802-00 | BOLT,SP/M8X20 | * | 8 | | | | | |
| 15 | V362-260-008-00 | NUT/WASHER/M8 | * | 8 | | | | | |
| 16 | V201-260-803-00 | BOLT/M8X30 | * | 4 | | | | | |
| 17 | V411-260-008-00 | WASHER,PL/M8 | * | 4 | | | | | |
| 18 | V304-260-008-00 | NUT/M8 | * | 8 | | | | | |
| 19 | 4141-403-283-00 | WASHER/09X28X02 | * | 4 81- | | | | | |

# FIG. 76 MARKER(CENTER)SYSTEM

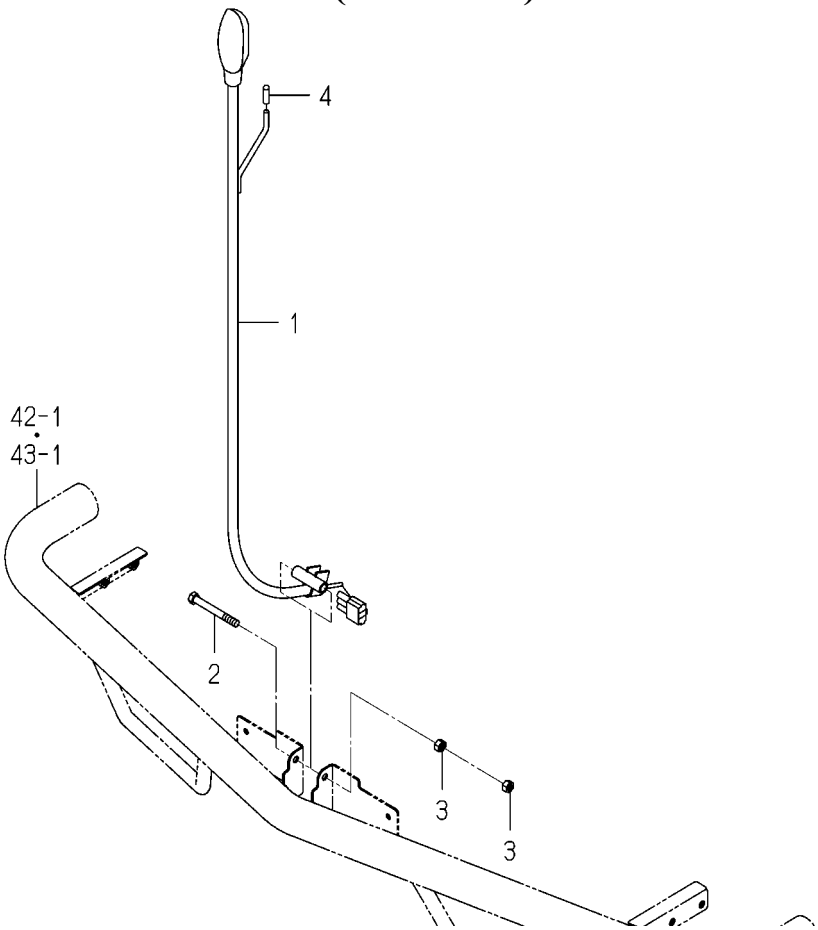


2232-524 -0100

| KEY | PART CODE | DESCRIPTION | SPC | TYPE OF MODEL NP80D E16 | | ITC | COL | GRP | REMARKS |
|---|---|---|---|---|---|---|---|---|---|
| 1 | 2233-524-200-00 | LAMP/MASCOT/NP8 ASSY | * | 1 | | | | | |
| 2 | V201-260-807-00 | BOLT/M8X70 | * | 1 | | | | | |
| 3 | V304-260-008-00 | NUT/M8 | * | 2 | | | | | |
| 4 | 4512-106-005-00 | CAP/D6/YELLOW | * | 1 | | | | | |

# FIG. 77 MARKER(SIDE)SYSTEM

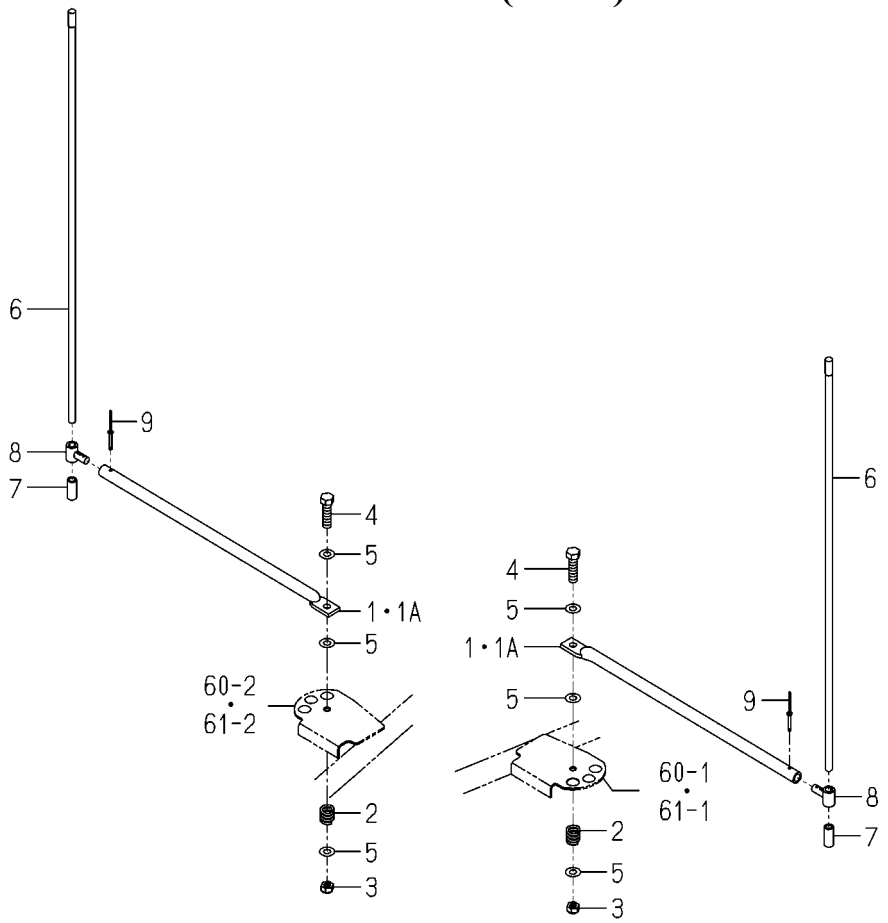


2233-528 -0100

| KEY | PART CODE | DESCRIPTION | SPC | TYPE OF MODEL NP80D E16 | | ITC | COL | GRP | REMARKS |
|---|---|---|---|---|---|---|---|---|---|
| 1 | 2233-528-003-00 | MARKER/SIDE/8/NP | * | 2 -175 | | | 5K | | |
| 1A | 2233-528-003-10 | MARKER/SIDE/8/NP | * | 2 176- | | 3 | 5K | | |
| 2 | 2172-124-004-00 | SPRING | * | 2 | | | | | |
| 3 | 2144-117-002-00 | NUT/M8 | * | 2 | | | | | |
| 4 | V201-260-804-00 | BOLT/M8X40 | * | 2 | | | | | |
| 5 | V411-260-008-00 | WASHER,PL/M8 | * | 6 | | | | | |
| 6 | 2161-528-001-00 | MARKER(M) | * | 2 | | | | | |
| 7 | 2186-528-007-00 | CAP | * | 2 | | | | | |
| 8 | 2175-528-008-20 | BOSS,EXTENSION MARKE | * | 2 | | | | | |
| 9 | 2186-528-244-00 | RIVET | * | 2 | | | | | |

# FIG. 78 LIGHT(HEAD)SYSTEM

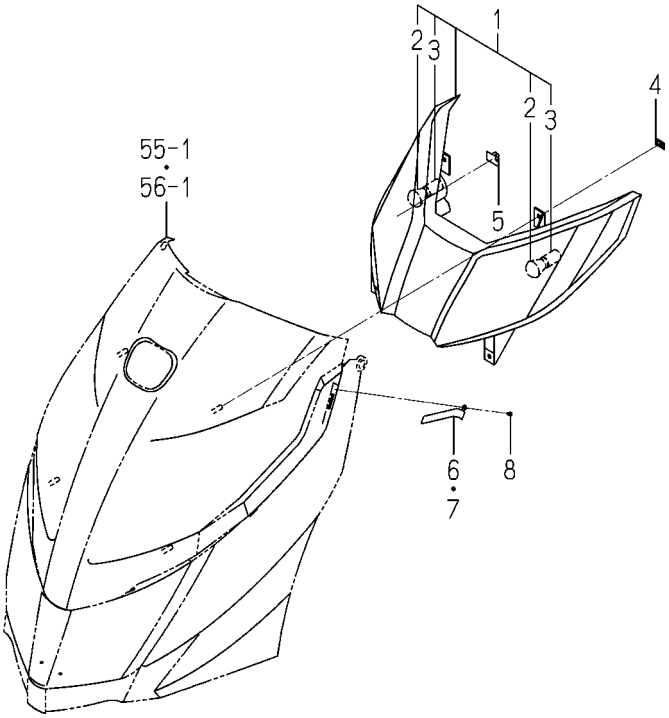


2232-532 -0100

| KEY | PART CODE | DESCRIPTION | SPC | TYPE OF MODEL NP80D E16 | | ITC | COL | GRP | REMARKS |
|---|---|---|---|---|---|---|---|---|---|
| 1 | 2232-532-200-00 | LAMP/HEAD/NP ASSY | * | 1 | | | | | |
| 2 | 2161-532-202-00 | BULB/12V18W | * | 2 | | | | | |
| 3 | 2161-532-203-00 | SOCKET | * | 2 | | | | | |
| 4 | V350-160-005-00 | NUT,SPEED/M5 | * | 4 | | | | | |
| 5 | 1426-621-038-00 | CLAMP,HARNESS | * | 1 | | | | | |
| 6 | 2232-532-004-00 | STOPPER/LAMP/HOOD/LH | * | 1 | | | | | |
| 7 | 2232-532-005-00 | STOPPER/LAMP/HOOD/RH | * | 1 | | | | | |
| 8 | V195-163-006-10 | SCREW/TAPPING | * | 2 | | | | | |

# FIG. 79 PANEL(INSTRUMENT)SYSTEM(Z TYPE)(1/2)

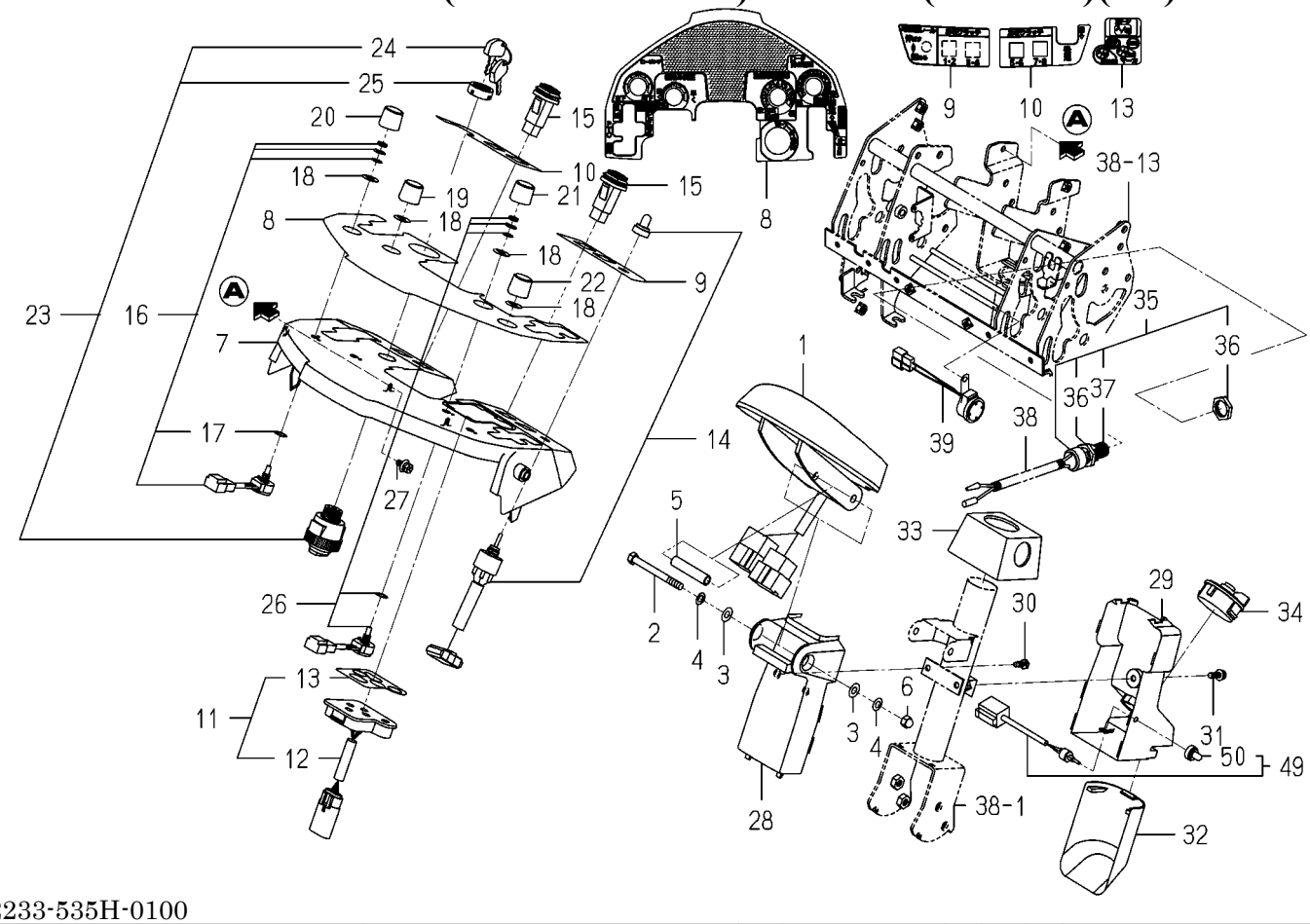


2233-535H-0100

| KEY | PART CODE | DESCRIPTION | SPC | TYPE OF MODEL NP80D E16 | | ITC | COL | GRP | REMARKS |
|---|---|---|---|---|---|---|---|---|---|
| 1 | 2232-536-300-10 | PANEL/MONITOR/NP/E16 | * | 1 | | | | | |
| 2 | V201-260-808-00 | BOLT/M8X80 | * | 1 | | | | | |
| 3 | V411-260-008-00 | WASHER,PL/M8 | * | 2 | | | | | |
| 4 | 3533-306-001-00 | SPAC/M8 | * | 2 | | | | | |
| 5 | 2232-536-007-00 | COLLAR/09X12X57 | * | 1 | | | | | |
| 6 | 2232-536-008-00 | UNUT/M8/CAP | * | 1 | | | | | |
| 7 | 2232-536-003-10 | PANEL/HOOD/NP | * | 1 | | | | | |
| 8 | 2233-912-041-00 | LABEL/PANEL/MAIN/8D/ | * | 1 | | | | | |
| 9 | 2232-912-049-00 | LABEL/PANEL/LH/6/N/E | * | 1 | | | | | |
| 10 | 2233-912-042-00 | LABEL/PANEL/RH/8/E16 | * | 1 | | | | | |
| 11 | 2232-536-330-00 | SWITCH/CONTROLLER/E1 | * | 1 | | | | | |
| 12 | 2232-536-250-00 | SWITCH/CONTROLLER/NP | * | 1 | | | | | |
| 13 | 2232-912-045-00 | LABEL/TACT/SWITCH/E1 | * | 1 | | | | | |
| 14 | 2204-530-300-00 | SWITCH/POWER TRAIN S | * | 1 | | | | | |
| 15 | 2512-665-220-00 | SWITCH/MOMENTARY/G/W | * | 4 | | | | | |
| 16 | 1729-609-240-00 | SWITCH/VR ASSY | * | 3 | | | | | |
| 17 | 1675-695-005-00 | INSULATOR | * | 3 | | | | | |
| 18 | 3652-273-002-00 | SORING | * | 4 | | | | | |
| 19 | 2204-536-551-00 | KNOB/HYDRAULIC SENSI | * | 1 | | | | | |
| 20 | 3849-270-402-00 | KNOB/BL | * | 1 | | | | | |
| 21 | 3849-270-403-00 | KNOB/GR | * | 1 | | | | | |
| 22 | 2233-536-004-00 | KNOB/RED | * | 1 | | | | | |
| 23 | 1716-680-200-20 | SWITCH/MAIN ASSY | * | 1 | | | | | |
| 24 | 2186-536-211-00 | KEY | * | 2 | | | | | |
| 25 | 2186-536-212-00 | NUT/RING | * | 1 | | | | | |
| 26 | 2232-536-290-00 | SWITCH/VR/NP ASSY | * | 1 | | | | | |
| 27 | 2144-501-011-10 | BOLT/M6X16X16 | * | 2 | | | | | |
| 28 | 2233-536-005-00 | COVER/COLUMN/FRONT/N | * | 1 | | | | | |
| 29 | 2233-536-006-00 | COVER/COLUMN/REAR/Z/ | * | 1 | | | | | |
| 30 | 2161-506-005-00 | SCREW/TAPPING/6X16 | * | 2 | | | | | |

# FIG. 79 PANEL(INSTRUMENT)SYSTEM(Z TYPE)(2/2)

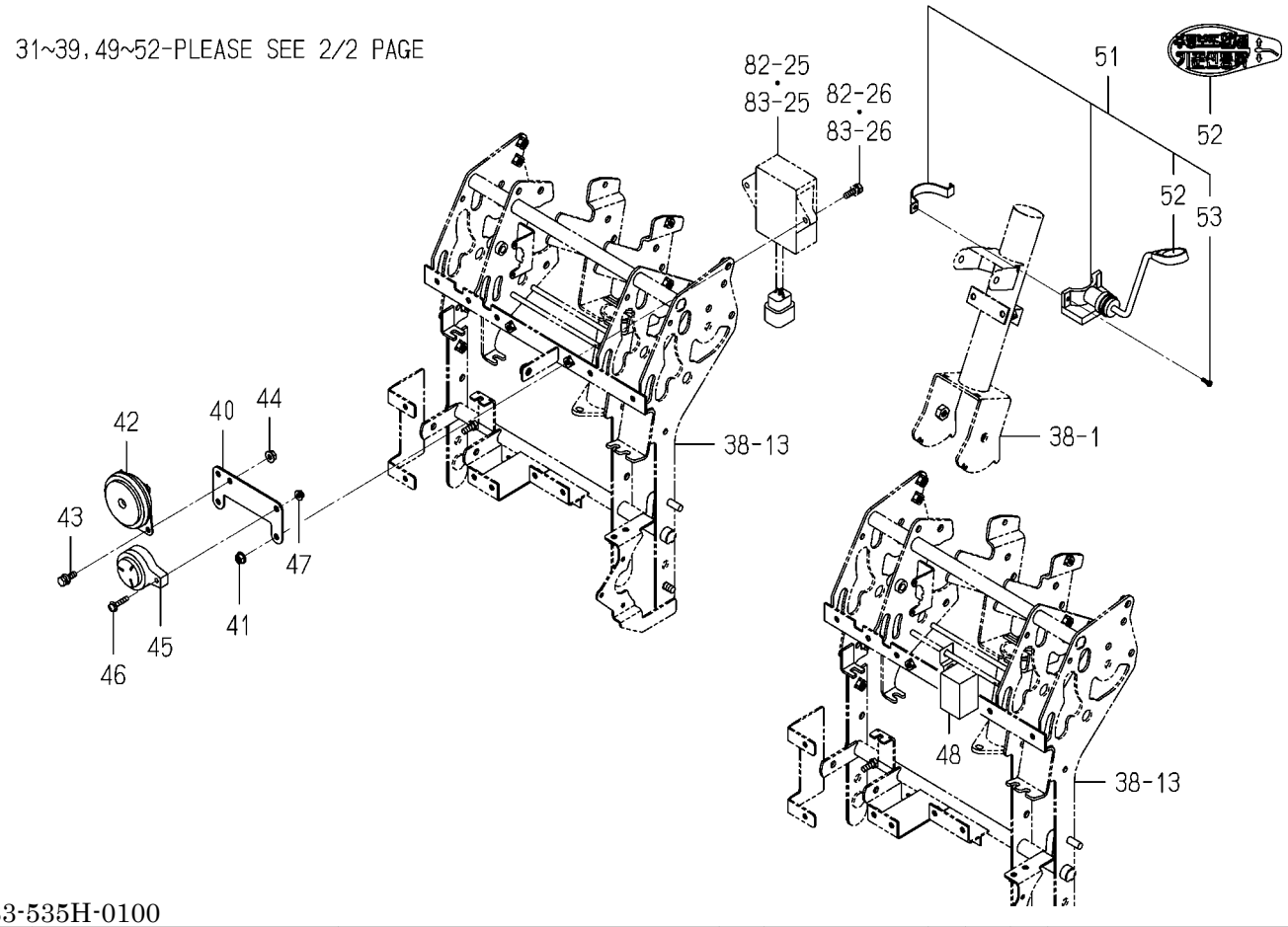


2233-535H-0100

| KEY | PART CODE | DESCRIPTION | SPC | TYPE OF MODEL NP80D E16 | | ITC | COL | GRP | REMARKS |
|---|---|---|---|---|---|---|---|---|---|
| 31 | V120-366-001-60 | SCREW,SP/M6X16 | * | 1 | | | | | |
| 32 | 2232-536-006-00 | COVER/COLUMN/LOWER/N | * | 1 | | | | | |
| 33 | 2233-536-007-00 | BOOT/STEARING/Z | * | 1 | | | | | |
| 34 | 3843-271-210-10 | SWITCH/COMBINATION | * | 1 | | | | | |
| 35 | 2144-542-220-00 | SWITCH,SAFETY ASSY | * | 1 | | | | | |
| 36 | 1491-623-222-00 | NUT/M20 | * | 2 | | | | | |
| 37 | 1491-623-223-00 | BOOT | * | 1 | | | | | |
| 38 | 2151-810-004-10 | CORRUGATED TUBE/07X1 | * | 1 | | | | | |
| 39 | 2515-665-210-00 | BUZZER | * | 1 | | | | | |
| 40 | 2232-536-012-10 | PLATE/SWITCH/E16/NP | * | 1 | | | | | |
| 41 | V360-260-006-00 | NUT/WASHER/M6 | * | 2 | | | | | |
| 42 | 1740-680-530-20 | HORN ASSY | * | 1 | | | | | |
| 43 | V210-360-601-60 | BOLT,SP/M6X16 | * | 2 | | | | | |
| 44 | V360-260-006-00 | NUT/WASHER/M6 | * | 2 | | | | | |
| 45 | 2204-542-200-00 | BUZZERASSY | * | 1 | | | | | |
| 46 | V120-365-002-50 | SCREW,SP/M5X25 | * | 1 | | | | | |
| 47 | V360-260-005-00 | NUT/WASHER/M5 | * | 1 | | | | | |
| 48 | 1650-652-390-00 | RELAY/FLASHER ASSY | * | 1 | | | | | |
| 49 | 2190-536-200-00 | SWITCH/MANUAL ASSY | * | 1 | | | | | |
| 50 | 1614-695-003-00 | CAP/SWITCH | * | 1 | | | | | |
| 51 | 2233-535-250-00 | LEVER/ASSIST/E1 ASSY | * | 1 | | | | | |
| 52 | 2233-912-093-00 | LABER/ASIST/E16 | * | 1 | | | | | |
| 53 | 1675-695-332-00 | SCREW/M05X12 | * | 1 | | | | | |

# FIG. 80 PANEL(INSTRUMENT)SYSTEM(1/2)

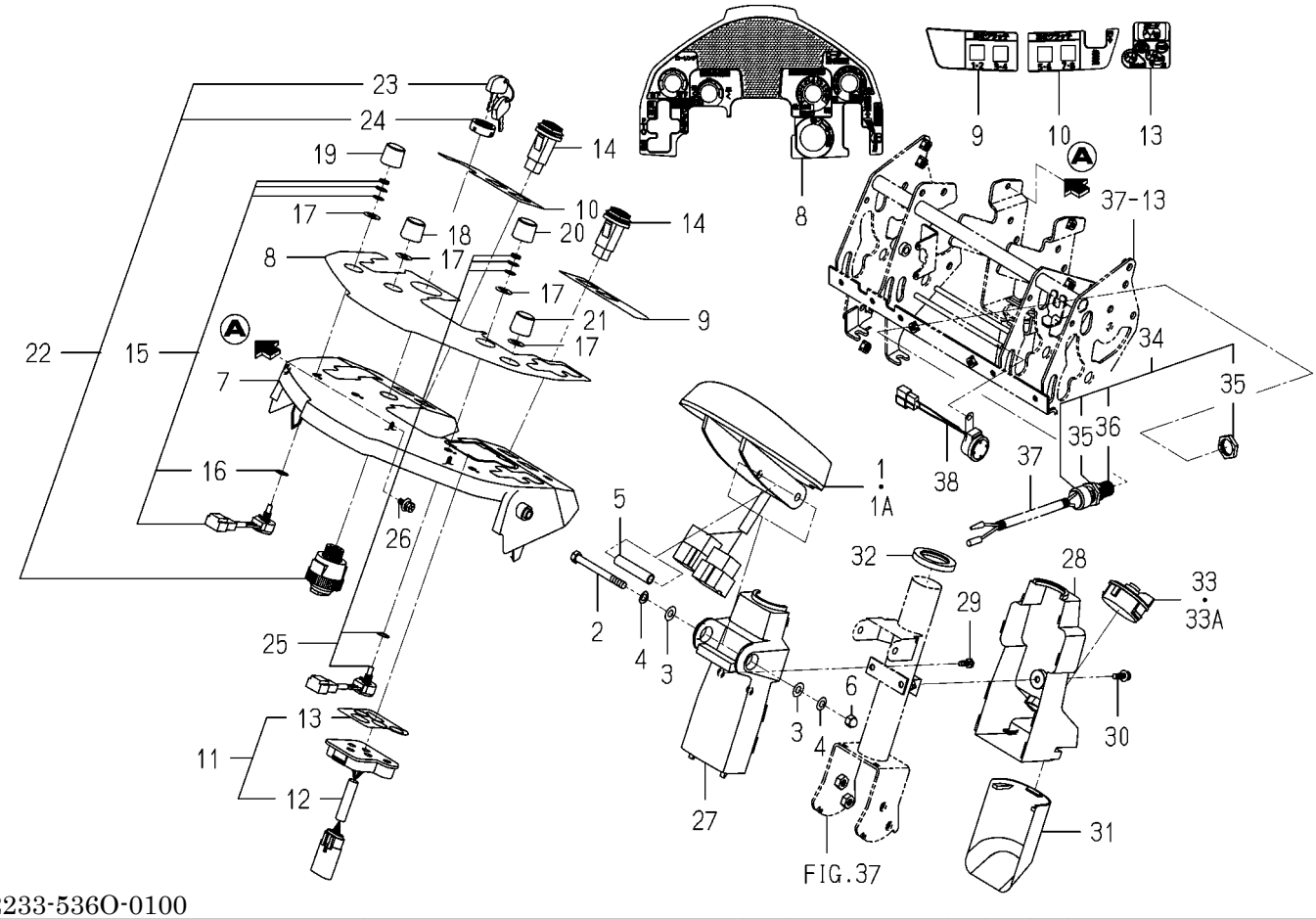


2233-536O-0100

| KEY | PART CODE | DESCRIPTION | SPC | TYPE OF MODEL NP80D E16 | | ITC | COL | GRP | REMARKS |
|---|---|---|---|---|---|---|---|---|---|
| 1 | 2232-536-300-00 | PANEL/MONITOR/NP/E16 | * | 1 -80 | | | | | |
| 1A | 2232-536-300-10 | PANEL/MONITOR/NP/E16 | * | 1 81- | | 1 | | | |
| 2 | V201-260-808-00 | BOLT/M8X80 | * | 1 | | | | | |
| 3 | V411-260-008-00 | WASHER,PL/M8 | * | 2 | | | | | |
| 4 | 3533-306-001-00 | SPAC/M8 | * | 2 | | | | | |
| 5 | 2232-536-007-00 | COLLAR/09X12X57 | * | 1 | | | | | |
| 6 | 2232-536-008-00 | UNUT/M8/CAP | * | 1 | | | | | |
| 7 | 2232-536-003-10 | PANEL/HOOD/NP | * | 1 | | | | | |
| 8 | 2233-912-041-00 | LABEL/PANEL/MAIN/8D/ | * | 1 | | | | | |
| 9 | 2232-912-043-00 | LABEL/PANEL/LH/6/E16 | * | 1 | | | | | |
| 10 | 2233-912-042-00 | LABEL/PANEL/RH/8/E16 | * | 1 | | | | | |
| 11 | 2232-536-330-00 | SWITCH/CONTROLLER/E1 | * | 1 | | | | | |
| 12 | 2232-536-250-00 | SWITCH/CONTROLLER/NP | * | 1 | | | | | |
| 13 | 2232-912-045-00 | LABEL/TACT/SWITCH/E1 | * | 1 | | | | | |
| 14 | 2512-665-220-00 | SWITCH/MOMENTARY/G/W | * | 4 | | | | | |
| 15 | 1729-609-240-00 | SWITCH/VR ASSY | * | 3 | | | | | |
| 16 | 1675-695-005-00 | INSULATOR | * | 3 | | | | | |
| 17 | 3652-273-002-00 | SORING | * | 4 | | | | | |
| 18 | 2204-536-551-00 | KNOB/HYDRAULIC SENSI | * | 1 | | | | | |
| 19 | 3849-270-402-00 | KNOB/BL | * | 1 | | | | | |
| 20 | 3849-270-403-00 | KNOB/GR | * | 1 | | | | | |
| 21 | 2233-536-004-00 | KNOB/RED | * | 1 | | | | | |
| 22 | 1716-680-200-20 | SWITCH/MAIN ASSY | * | 1 | | | | | |
| 23 | 2186-536-211-00 | KEY | * | 2 | | | | | |
| 24 | 2186-536-212-00 | NUT/RING | * | 1 | | | | | |
| 25 | 2232-536-290-00 | SWITCH/VR/NP ASSY | * | 1 | | | | | |
| 26 | 2144-501-011-10 | BOLT/M6X16X16 | * | 2 | | | | | |
| 27 | 2232-536-001-10 | COVER/COLUMN/FRONT/N | * | 1 | | | | | |
| 28 | 2232-536-002-00 | COVER/COLUMN/REAR/NP | * | 1 | | | | | |
| 29 | 2161-506-005-00 | SCREW/TAPPING/6X16 | * | 2 | | | | | |

# FIG. 80 PANEL(INSTRUMENT)SYSTEM(2/2)

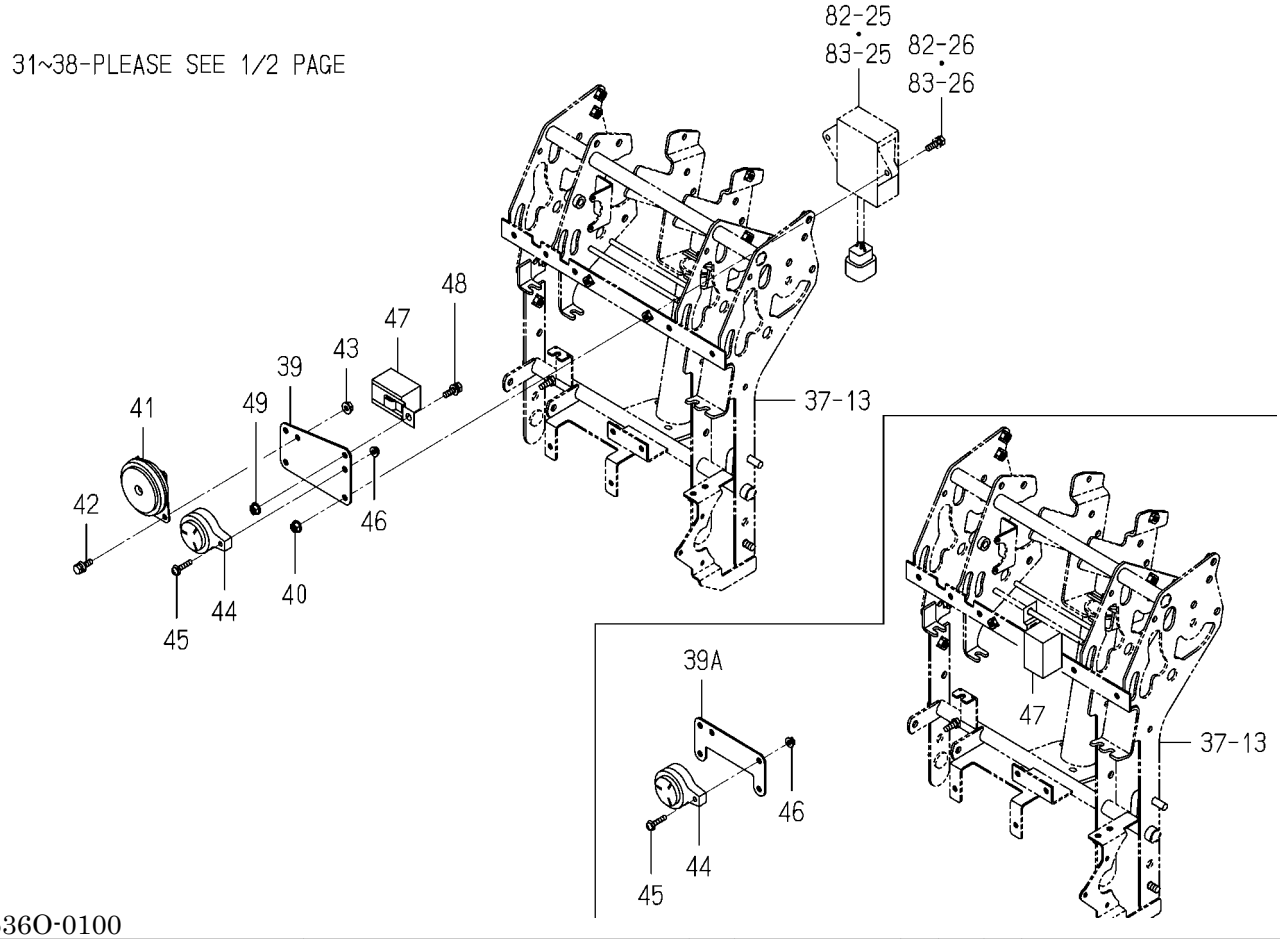


2233-536O-0100

| KEY | PART CODE | DESCRIPTION | SPC | TYPE OF MODEL NP80D E16 | | ITC | COL | GRP | REMARKS |
|---|---|---|---|---|---|---|---|---|---|
| 30 | V120-366-001-60 | SCREW,SP/M6X16 | * | 1 | | | | | |
| 31 | 2232-536-006-00 | COVER/COLUMN/LOWER/N | * | 1 | | | | | |
| 32 | 2232-536-011-00 | CAP/COVER/COLUMN/NP | * | 1 | | | | | |
| 33 | 3843-271-210-00 | SWITVH/COMBI | * | 1 -80 | | | | | |
| 33A | 3843-271-210-10 | SWITCH/COMBINATION | * | 1 81- | | 1 | | | |
| 34 | 2144-542-220-00 | SWITCH,SAFETY ASSY | * | 1 | | | | | |
| 35 | 1491-623-222-00 | NUT/M20 | * | 2 | | | | | |
| 36 | 1491-623-223-00 | BOOT | * | 1 | | | | | |
| 37 | 2151-810-004-10 | CORRUGATED TUBE/07X1 | * | 1 | | | | | |
| 38 | 2515-665-210-00 | BUZZER | * | 1 | | | | | |
| 39 | 2232-536-012-00 | PLATE/SWITCH/E16/NP | * | 1 -1644 | | | | | |
| 39A | 2232-536-012-10 | PLATE/SWITCH/E16/NP | * | 1 1645- | | | | | |
| 40 | V360-260-006-00 | NUT/WASHER/M6 | * | 2 | | | | | |
| 41 | 1740-680-530-20 | HORN ASSY | * | 1 | | | | | |
| 42 | V210-360-601-60 | BOLT,SP/M6X16 | * | 2 | | | | | |
| 43 | V360-260-006-00 | NUT/WASHER/M6 | * | 2 | | | | | |
| 44 | 2204-542-200-00 | BUZZERASSY | * | 1 | | | | | |
| 45 | V120-365-002-50 | SCREW,SP/M5X25 | * | 1 | | | | | |
| 46 | V360-260-005-00 | NUT/WASHER/M5 | * | 1 | | | | | |
| 47 | 1650-652-390-00 | RELAY/FLASHER ASSY | * | 1 | | | | | |
| 48 | V210-360-601-60 | BOLT,SP/M6X16 | * | 1 -1644 | | | | | |
| 49 | V360-260-006-00 | NUT/WASHER/M6 | * | 1 -1644 | | | | | |

# FIG. 81 PANEL(INSTRUMENT)SYSTEM(1/2) (R TYPE EXCEPT Z)

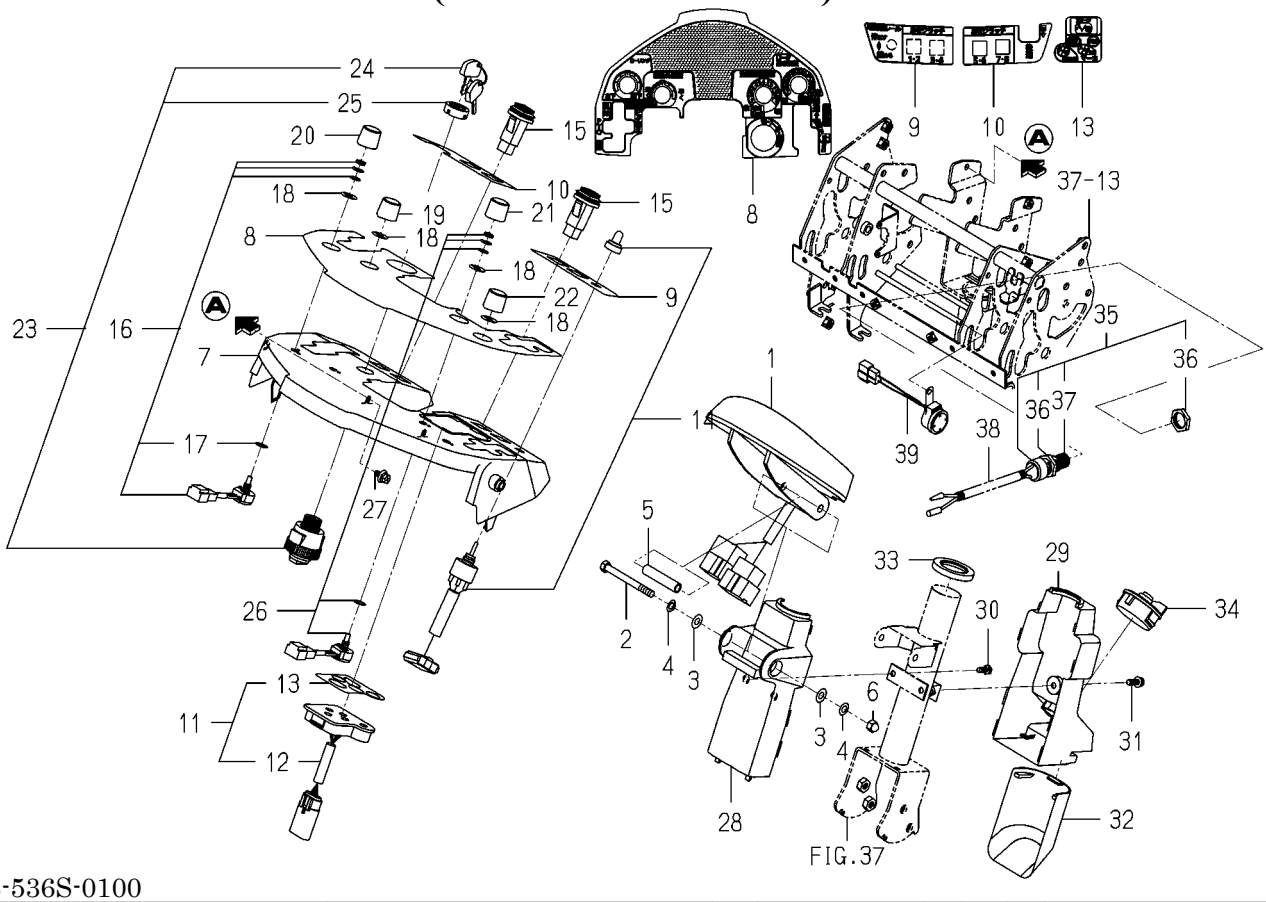


2233-536S-0100

| KEY | PART CODE | DESCRIPTION | SPC | TYPE OF MODEL NP80D E16 | | ITC | COL | GRP | REMARKS |
|---|---|---|---|---|---|---|---|---|---|
| 1 | 2232-536-300-10 | PANEL/MONITOR/NP/E16 | * | 1 | | | | | |
| 2 | V201-260-808-00 | BOLT/M8X80 | * | 1 | | | | | |
| 3 | V411-260-008-00 | WASHER,PL/M8 | * | 2 | | | | | |
| 4 | 3533-306-001-00 | SPAC/M8 | * | 2 | | | | | |
| 5 | 2232-536-007-00 | COLLAR/09X12X57 | * | 1 | | | | | |
| 6 | 2232-536-008-00 | UNUT/M8/CAP | * | 1 | | | | | |
| 7 | 2232-536-003-10 | PANEL/HOOD/NP | * | 1 | | | | | |
| 8 | 2233-912-041-00 | LABEL/PANEL/MAIN/8D/ | * | 1 | | | | | |
| 9 | 2232-912-049-00 | LABEL/PANEL/LH/6/N/E | * | 1 | | | | | |
| 10 | 2233-912-042-00 | LABEL/PANEL/RH/8/E16 | * | 1 | | | | | |
| 11 | 2232-536-330-00 | SWITCH/CONTROLLER/E1 | * | 1 | | | | | |
| 12 | 2232-536-250-00 | SWITCH/CONTROLLER/NP | * | 1 | | | | | |
| 13 | 2232-912-045-00 | LABEL/TACT/SWITCH/E1 | * | 1 | | | | | |
| 14 | 2204-530-300-00 | SWITCH/POWER TRAIN S | * | 1 | | | | | |
| 15 | 2512-665-220-00 | SWITCH/MOMENTARY/G/W | * | 4 | | | | | |
| 16 | 1729-609-240-00 | SWITCH/VR ASSY | * | 3 | | | | | |
| 17 | 1675-695-005-00 | INSULATOR | * | 3 | | | | | |
| 18 | 3652-273-002-00 | SORING | * | 4 | | | | | |
| 19 | 2204-536-551-00 | KNOB/HYDRAULIC SENSI | * | 1 | | | | | |
| 20 | 3849-270-402-00 | KNOB/BL | * | 1 | | | | | |
| 21 | 3849-270-403-00 | KNOB/GR | * | 1 | | | | | |
| 22 | 2233-536-004-00 | KNOB/RED | * | 1 | | | | | |
| 23 | 1716-680-200-20 | SWITCH/MAIN ASSY | * | 1 | | | | | |
| 24 | 2186-536-211-00 | KEY | * | 2 | | | | | |
| 25 | 2186-536-212-00 | NUT/RING | * | 1 | | | | | |
| 26 | 2232-536-290-00 | SWITCH/VR/NP ASSY | * | 1 | | | | | |
| 27 | 2144-501-011-10 | BOLT/M6X16X16 | * | 2 | | | | | |
| 28 | 2232-536-001-10 | COVER/COLUMN/FRONT/N | * | 1 | | | | | |
| 29 | 2232-536-002-00 | COVER/COLUMN/REAR/NP | * | 1 | | | | | |
| 30 | 2161-506-005-00 | SCREW/TAPPING/6X16 | * | 2 | | | | | |

# FIG. 81 PANEL(INSTRUMENT)SYSTEM(2/2) (R TYPE EXCEPT Z)

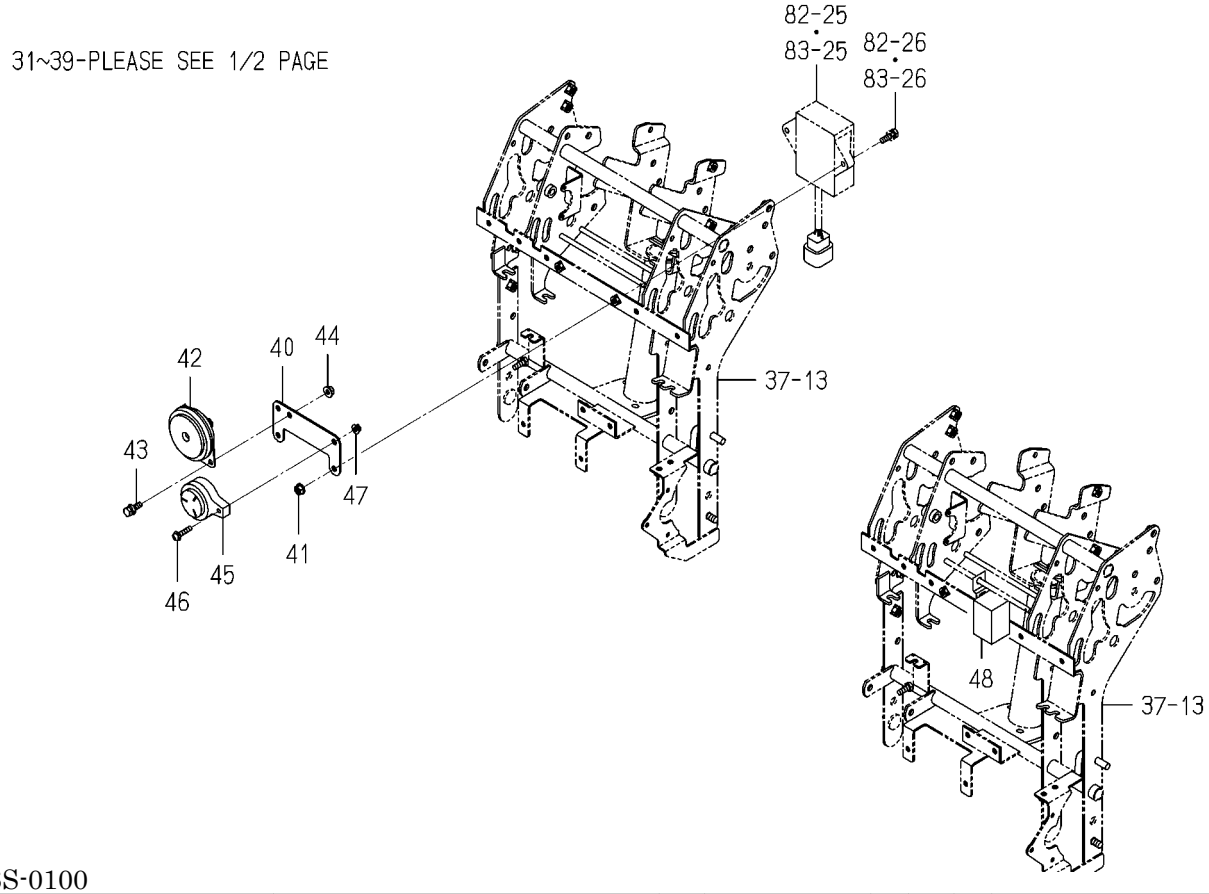


2233-536S-0100

| KEY | PART CODE | DESCRIPTION | SPC | TYPE OF MODEL NP80D E16 | | ITC | COL | GRP | REMARKS |
|---|---|---|---|---|---|---|---|---|---|
| 31 | V120-366-001-60 | SCREW,SP/M6X16 | * | 1 | | | | | |
| 32 | 2232-536-006-00 | COVER/COLUMN/LOWER/N | * | 1 | | | | | |
| 33 | 2232-536-011-00 | CAP/COVER/COLUMN/NP | * | 1 | | | | | |
| 34 | 3843-271-210-10 | SWITCH/COMBINATION | * | 1 | | | | | |
| 35 | 2144-542-220-00 | SWITCH,SAFETY ASSY | * | 1 | | | | | |
| 36 | 1491-623-222-00 | NUT/M20 | * | 2 | | | | | |
| 37 | 1491-623-223-00 | BOOT | * | 1 | | | | | |
| 38 | 2151-810-004-10 | CORRUGATED TUBE/07X1 | * | 1 | | | | | |
| 39 | 2515-665-210-00 | BUZZER | * | 1 | | | | | |
| 40 | 2232-536-012-10 | PLATE/SWITCH/E16/NP | * | 1 | | | | | |
| 41 | V360-260-006-00 | NUT/WASHER/M6 | * | 2 | | | | | |
| 42 | 1740-680-530-20 | HORN ASSY | * | 1 | | | | | |
| 43 | V210-360-601-60 | BOLT,SP/M6X16 | * | 2 | | | | | |
| 44 | V360-260-006-00 | NUT/WASHER/M6 | * | 2 | | | | | |
| 45 | 2204-542-200-00 | BUZZERASSY | * | 1 | | | | | |
| 46 | V120-365-002-50 | SCREW,SP/M5X25 | * | 1 | | | | | |
| 47 | V360-260-005-00 | NUT/WASHER/M5 | * | 1 | | | | | |
| 48 | 1650-652-390-00 | RELAY/FLASHER ASSY | * | 1 | | | | | |

# FIG. 82 HARNESS(TRAVELING SECTION)SYSTEM(1/2) (F TYPE)

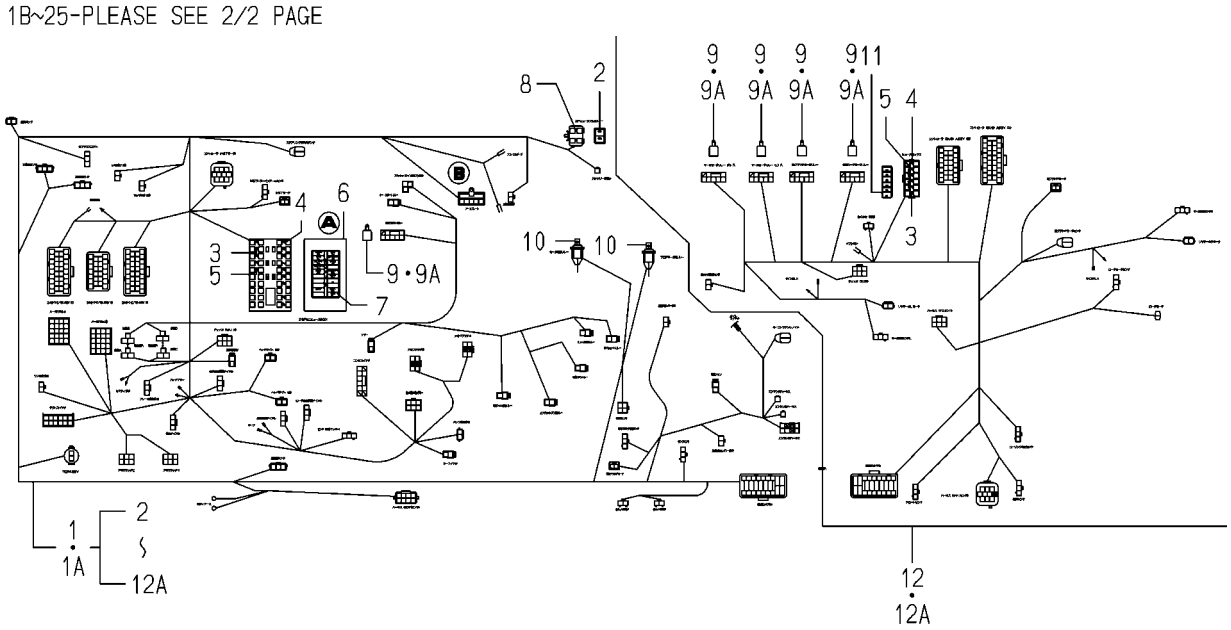


2233-537X-0100

| KEY | PART CODE | DESCRIPTION | SPC | TYPE OF MODEL NP80D E16 | | ITC | COL | GRP | REMARKS |
|---|---|---|---|---|---|---|---|---|---|
| 1 | 2233-537-520-10 | HARNESS/MAIN/8DKF | * | 1 -80 | | | | | |
| 1A | 2233-537-520-50 | HARNESS/MAIN/8DKF | * | 1 -138 | | 1 | | | |
| 1B | 2233-537-520-60 | HARNESS/MAIN/8DKF | * | 1 -274 | | 1 | | | |
| 1C | 2233-537-520-70 | HARNESS/MAIN/8DKF | * | 1 275- | | 1 | | | |
| 2 | 2204-537-501-00 | LABEL/FUSE | * | 1 | | | | | |
| 3 | 3824-247-202-00 | FUSE/BLADE/32V05A | * | 5 | | | | | |
| 4 | 3821-262-202-00 | FUSE/BLADE/32V10A | * | 8 | | | | | |
| 5 | 3821-262-204-00 | FUSE/BLADE/32V20A | * | 9 | | | | | |
| 6 | 2204-537-202-00 | CAP/FUSE BOX | * | 1 | | | | | |
| 7 | 2233-537-521-10 | ORNAMENT/FUSE/MAIN/8 | * | 1 | | | | | |
| 8 | 1650-650-222-00 | FUSE/SLOW BLOW/40A | * | 2 | | | | | |
| 9 | 3841-277-300-00 | RELAY,TWIN | * | 5 -80 | | | | | |
| 9A | 3841-277-300-10 | RELAY/TWIN | * | 5 81- | | 1 | | | |
| 10 | 1719-650-250-00 | RELAY ASSY | * | 2 | | | | | |
| 11 | 2232-537-904-00 | ORNAMENT/FUSE/REAR/E | * | 1 | | | | | |
| 12 | 2233-537-540-00 | HARNESS/REAR/8DKF | * | 1 -80 | | | | | |
| 12A | 2233-537-540-10 | HARNESS/REAR/8DKF | * | 1 81- | | 1 | | | |
| 13 | 2232-537-950-00 | HARNESS/ENGINE/DFE16 | * | 1 | | | | | |
| 14 | 3829-260-303-00 | FUSE/SLOW BLOW/60A | * | 1 | | | | | |
| 15 | 1614-690-202-00 | FUSE/SLOW BLOW/50A | * | 2 | | | | | |
| 16 | 2232-537-951-00 | LABEL/FUSE/ENGINE/KF | * | 1 | | | | | |
| 17 | 2204-537-002-00 | BAND | * | 20 | | | | | |
| 18 | V210-360-602-00 | BOLT,SP/M6X20 | * | 2 | | | | | |
| 19 | 2161-735-005-00 | PIN | * | 2 | | | | | |
| 20 | V360-260-006-00 | NUT/WASHER/M6 | * | 1 | | | | | |
| 21 | 3623-263-001-00 | WIRE,LEAD | * | 1 | | | | | |
| 22 | 1690-652-210-00 | RELAY ASSY | * | 2 | | | | | |
| 23 | 1650-658-270-00 | RELAY/4P ASSY | * | 5 | | | | | |
| 24 | 2212-581-009-00 | HARNESSBAND/202 | * | 1 | | | | | |
| 25 | 1754-640-230-10 | CONTROLLER/MOTO ASSY | * | 1 | | | | | |

# FIG. 82 HARNESS(TRAVELING SECTION)SYSTEM(2/2) (F TYPE)

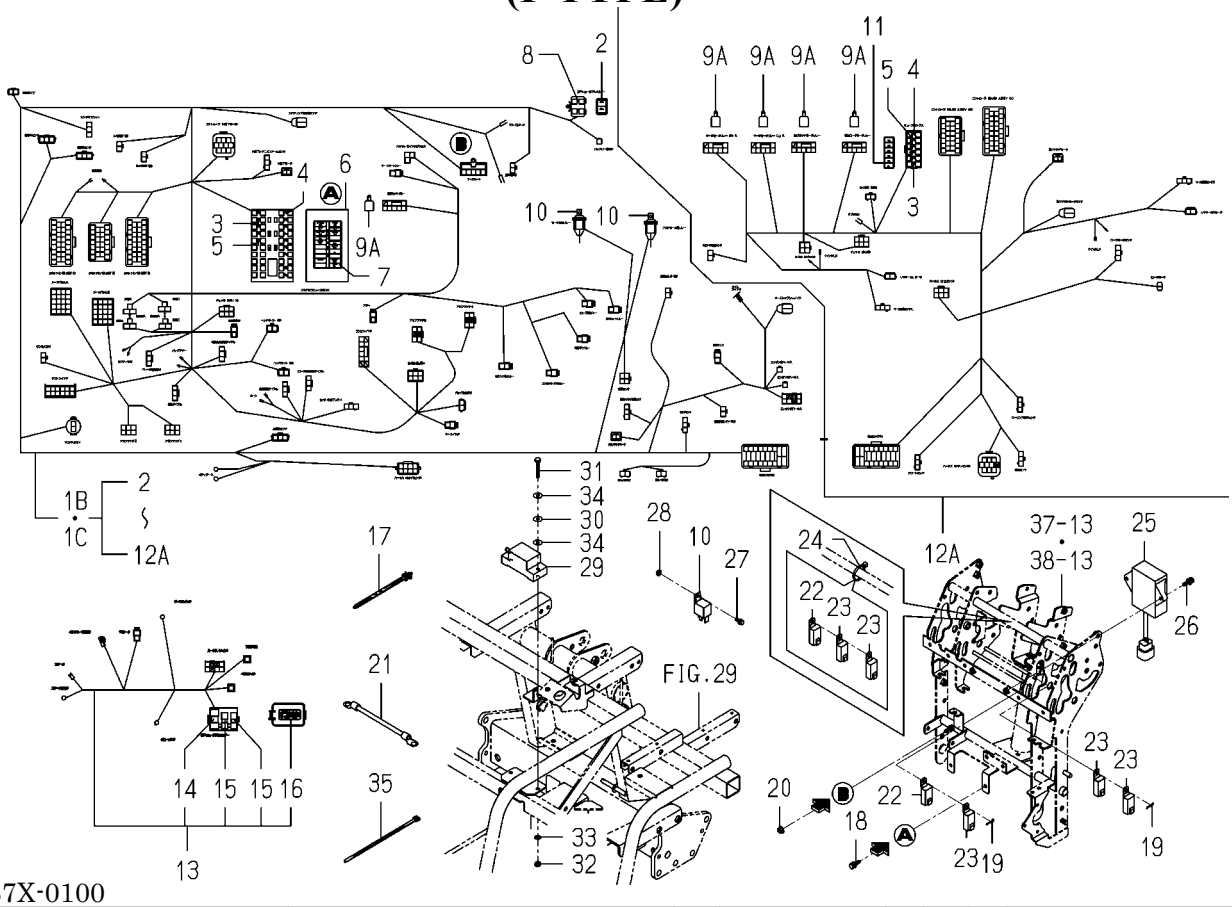


2233-537X-0100

| KEY | PART CODE | DESCRIPTION | SPC | TYPE OF MODEL NP80D E16 | | ITC | COL | GRP | REMARKS |
|---|---|---|---|---|---|---|---|---|---|
| 26 | V210-360-602-00 | BOLT,SP/M6X20 | * | 2 | | | | | |
| 27 | 2505-111-003-00 | BOLT/SP | * | 2 | | | | | |
| 28 | V360-260-005-00 | NUT/WASHER/M5 | * | 2 | | | | | |
| 29 | 1732-662-200-00 | SENSOR/ANGULAR VELOC | * | 1 | | | | | |
| 30 | 2186-545-003-10 | CUSHION,SENSOR/WASHE | * | 2 | | | | | |
| 31 | V200-260-604-00 | BOLT/M6X40 | * | 2 | | | | | |
| 32 | V301-260-006-00 | NUT/M6 | * | 2 | | | | | |
| 33 | V411-260-006-00 | WASHER,PL/M6 | * | 2 | | | | | |
| 34 | 3560-503-302-00 | WASHER,WIRE TENSION | * | 4 | | | | | |
| 35 | 1342-402-006-00 | BAND,WIRE/250 | * | 1 | | | | | |

# FIG. 83 HARNESS(TRAVELING SECTION)SYSTEM(1/2) (EXCEPT F TYPE)

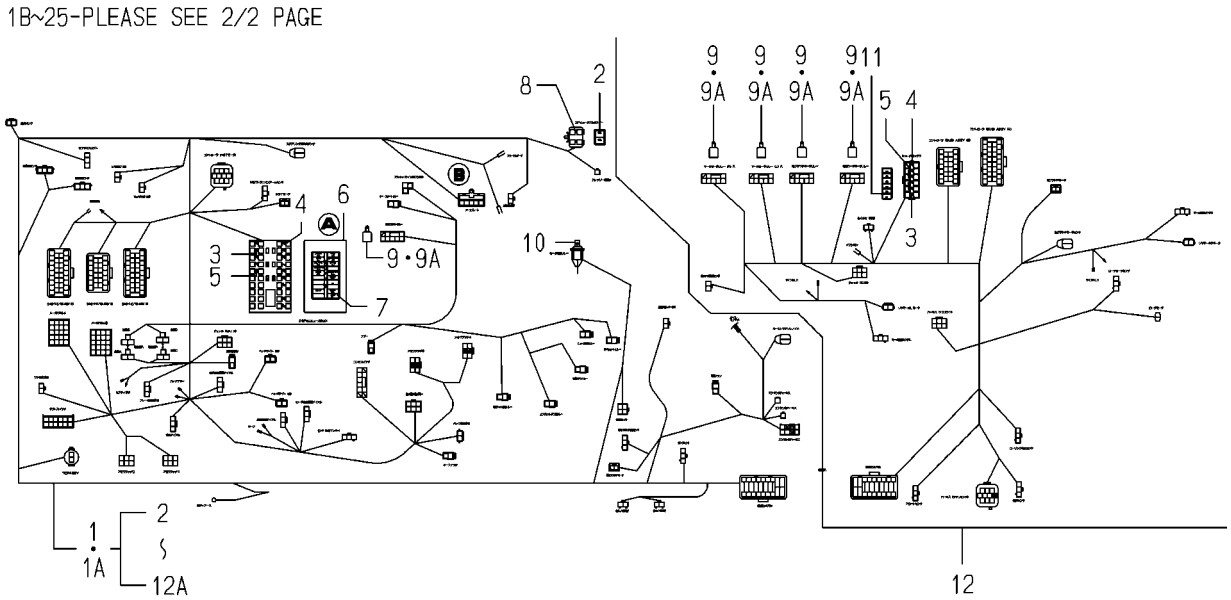


2233-537Y-0100

| KEY | PART CODE | DESCRIPTION | SPC | TYPE OF MODEL NP80D E16 | | ITC | COL | GRP | REMARKS |
|---|---|---|---|---|---|---|---|---|---|
| 1 | 2233-537-570-10 | HARNESS/MAIN/8D ASSY | * | 1 -80 | | | | | |
| 1A | 2233-537-570-40 | HARNESS/MAIN/8D ASSY | * | 1 -138 | | 1 | | | |
| 1B | 2233-537-570-50 | HARNESS/MAIN/8D ASSY | * | 1 -276 | | 1 | | | |
| 1C | 2233-537-570-60 | HARNESS/MAIN/8D ASSY | * | 1 277- | | 1 | | | |
| 2 | 2204-537-501-00 | LABEL/FUSE | * | 1 | | | | | |
| 3 | 3824-247-202-00 | FUSE/BLADE/32V05A | * | 5 | | | | | |
| 4 | 3821-262-202-00 | FUSE/BLADE/32V10A | * | 8 | | | | | |
| 5 | 3821-262-204-00 | FUSE/BLADE/32V20A | * | 9 | | | | | |
| 6 | 2204-537-202-00 | CAP/FUSE BOX | * | 1 | | | | | |
| 7 | 2233-537-521-10 | ORNAMENT/FUSE/MAIN/8 | * | 1 | | | | | |
| 8 | 1650-650-222-00 | FUSE/SLOW BLOW/40A | * | 2 | | | | | |
| 9 | 3841-277-300-00 | RELAY,TWIN | * | 5 -80 | | | | | |
| 9A | 3841-277-300-10 | RELAY/TWIN | * | 5 81- | | 1 | | | |
| 10 | 1719-650-250-00 | RELAY ASSY | * | 1 | | | | | |
| 11 | 2232-537-904-00 | ORNAMENT/FUSE/REAR/E | * | 1 | | | | | |
| 12 | 2233-537-590-00 | HARNESS/REAR/8D ASSY | * | 1 -80 | | | | | |
| 12A | 2233-537-590-20 | HARNESS/REAR/8D ASSY | * | 1 81- | | 1 | | | |
| 13 | 2232-537-660-00 | HARNESS/ENGINE/D/E16 | * | 1 | | | | | |
| 14 | 3829-260-303-00 | FUSE/SLOW BLOW/60A | * | 1 | | | | | |
| 15 | 1614-690-202-00 | FUSE/SLOW BLOW/50A | * | 1 | | | | | |
| 16 | 2232-537-661-00 | LABEL/FUSE/ENGINE/K | * | 1 | | | | | |
| 17 | 2204-537-002-00 | BAND | * | 20 | | | | | |
| 18 | V210-360-602-00 | BOLT,SP/M6X20 | * | 2 | | | | | |
| 19 | 2161-735-005-00 | PIN | * | 2 | | | | | |
| 20 | V360-260-006-00 | NUT/WASHER/M6 | * | 1 | | | | | |
| 21 | 3623-263-001-00 | WIRE,LEAD | * | 1 | | | | | |
| 22 | 1690-652-210-00 | RELAY ASSY | * | 2 | | | | | |
| 23 | 1650-658-270-00 | RELAY/4P ASSY | * | 5 | | | | | |
| 24 | 2212-581-009-00 | HARNESSBAND/202 | * | 1 | | | | | |
| 25 | 1754-640-230-10 | CONTROLLER/MOTO ASSY | * | 1 | | | | | |

# FIG. 83 HARNESS(TRAVELING SECTION)SYSTEM(2/2) (EXCEPT F TYPE)

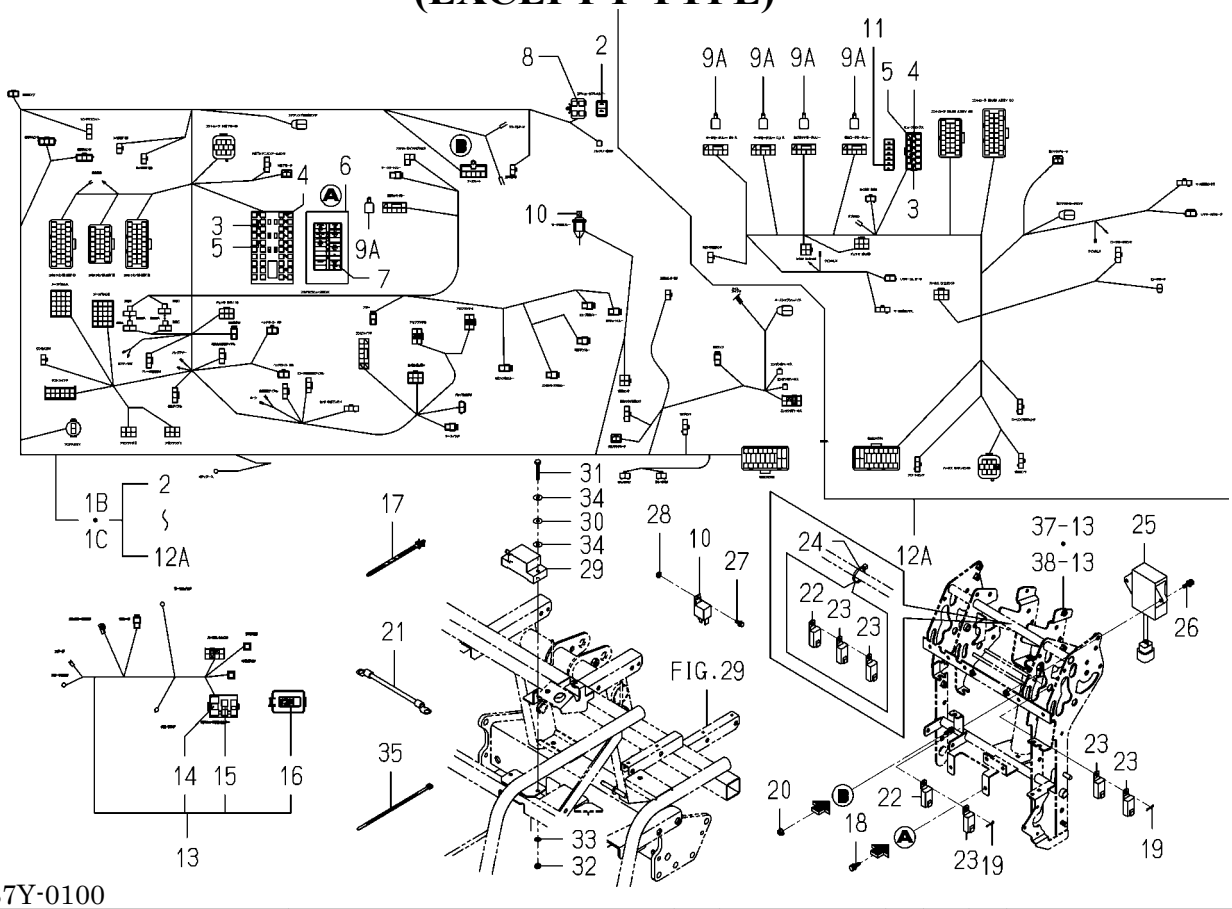


2233-537Y-0100

| KEY | PART CODE | DESCRIPTION | SPC | TYPE OF MODEL NP80D E16 | | ITC | COL | GRP | REMARKS |
|---|---|---|---|---|---|---|---|---|---|
| 26 | V210-360-602-00 | BOLT,SP/M6X20 | * | 2 | | | | | |
| 27 | 2505-111-003-00 | BOLT/SP | * | 1 | | | | | |
| 28 | V360-260-005-00 | NUT/WASHER/M5 | * | 1 | | | | | |
| 29 | 1732-662-200-00 | SENSOR/ANGULAR VELOC | * | 1 | | | | | |
| 30 | 2186-545-003-10 | CUSHION,SENSOR/WASHE | * | 2 | | | | | |
| 31 | V200-260-604-00 | BOLT/M6X40 | * | 2 | | | | | |
| 32 | V301-260-006-00 | NUT/M6 | * | 2 | | | | | |
| 33 | V411-260-006-00 | WASHER,PL/M6 | * | 2 | | | | | |
| 34 | 3560-503-302-00 | WASHER,WIRE TENSION | * | 4 | | | | | |
| 35 | 1342-402-006-00 | BAND,WIRE/250 | * | 1 | | | | | |

# FIG. 84 HARNESS(PLANTING SECTION)SYSTEM

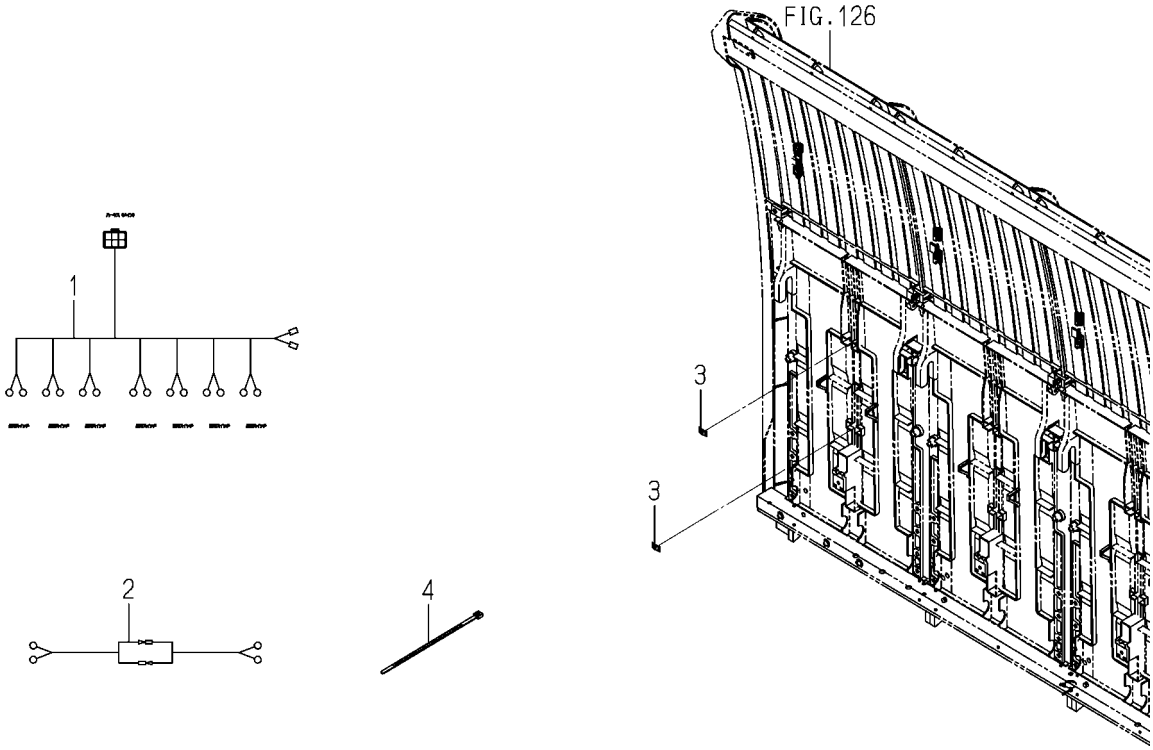


2233-539 -0100

| KEY | PART CODE | DESCRIPTION | SPC | TYPE OF MODEL NP80D E16 | | ITC | COL | GRP | REMARKS |
|---|---|---|---|---|---|---|---|---|---|
| 1 | 2233-539-200-00 | HARNESS/SEEDLING TAN | * | 1 | | | | | |
| 2 | 2162-539-230-10 | HARNESS,SEEDING TANK | * | 1 | | | | | |
| 3 | V350-160-004-00 | NUT,SPEED/M4 | * | 14 | | | | | |
| 4 | 1376-402-003-00 | BAND,WIRE/140 | * | 1 | | | | | |
| | | | | 1957- | | | | | |

# FIG. 85 BATTERY SYSTEM

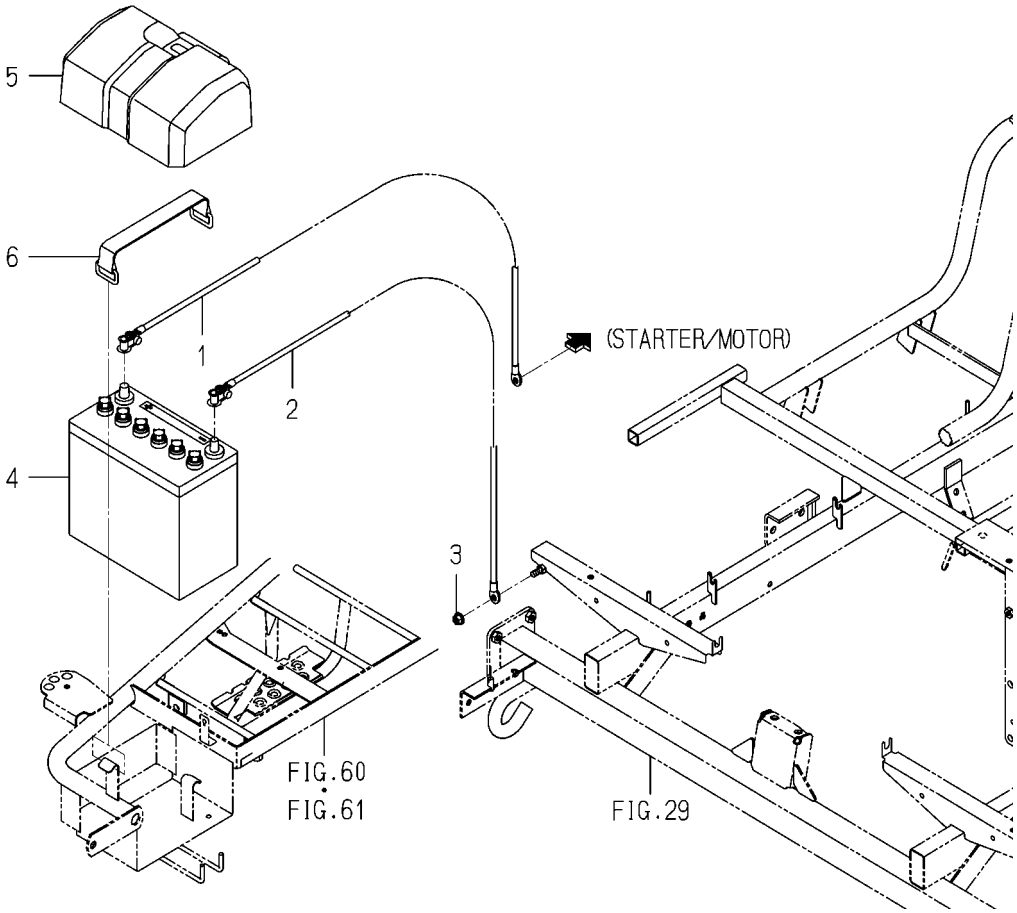


2233-541 -0100

| KEY | PART CODE | DESCRIPTION | SPC | TYPE OF MODEL NP80D | E16 | ITC | COL | GRP | REMARKS |
|---|---|---|---|---|---|---|---|---|---|
| 1 | 2233-541-200-00 | HARNESS/BATTERY/D/NP | * | 1 | | | | | |
| 2 | 2232-541-230-00 | HARNESS/BATTERY EART | * | 1 | | | | | |
| 3 | V362-260-008-00 | NUT/WASHER/M8 | * | 1 | | | | | |
| 4 | 3656-260-200-30 | BATTERY(55B24L) ASSY | * | 1 | | | | | |
| 5 | 2233-541-001-00 | COVER/BATTERY/D/NP | * | 1 | | | | | |
| 6 | 3640-260-200-30 | BATTERYSTAY COMP | * | 1 | | | | | |

# FIG. 86 CONTROLLER(FRONT)SYSTEM (EXCEPT Z TYPE)

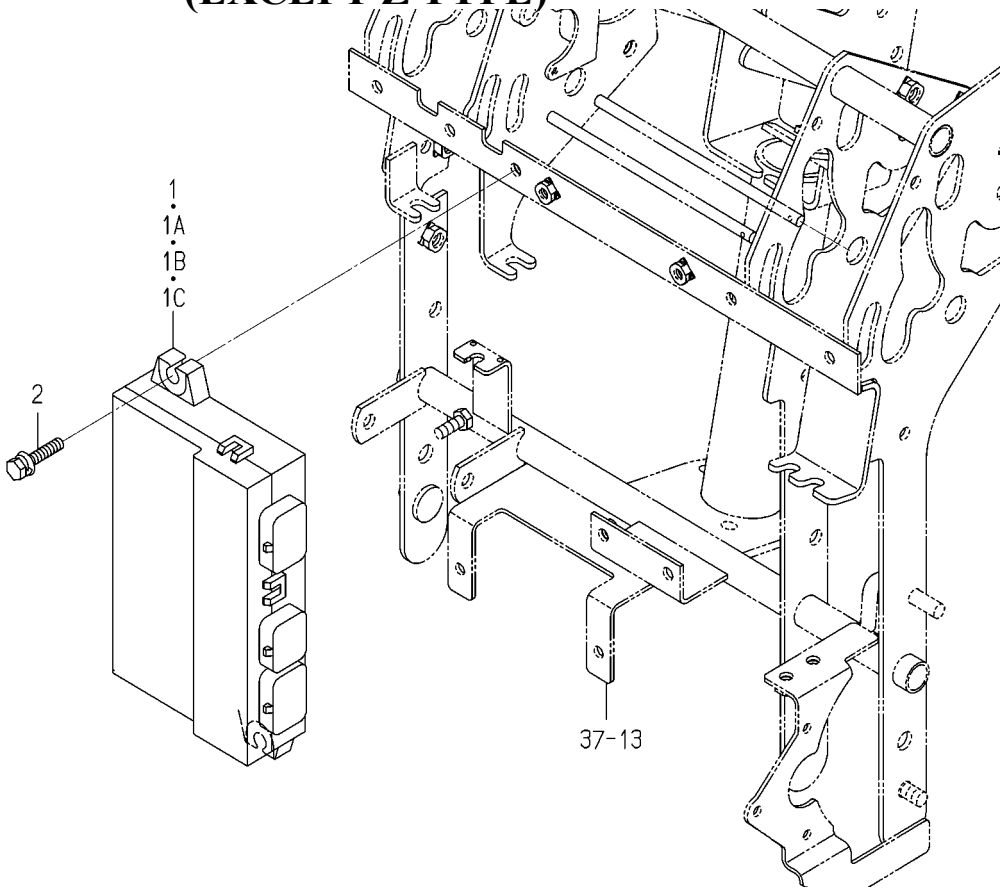


2233-545A-0100

| KEY | PART CODE | DESCRIPTION | SPC | TYPE OF MODEL NP80D E16 | | ITC | COL | GRP | REMARKS |
|---|---|---|---|---|---|---|---|---|---|
| 1 | 2233-545-300-20 | CONTROLLER/8E/FRONT | * | 1 -80 | | | | | |
| 1A | 2233-545-300-40 | CONTROLLER/8E/FRONT | * | 1 -175 | | 1 | | | |
| 1B | 2233-545-300-50 | CONTROLLER/8E/FRONT | * | 1 -275 | | 1 | | | |
| 1C | 2233-545-300-60 | CONTROLLER/8E/FRONT | * | 1 276- | | 1 | | | |
| 2 | V210-360-603-00 | BOLT,SP/M6X30 | * | 2 | | | | | |

# FIG. 87 CONTROLLER(REAR)SYSTEM(Z TYPE)

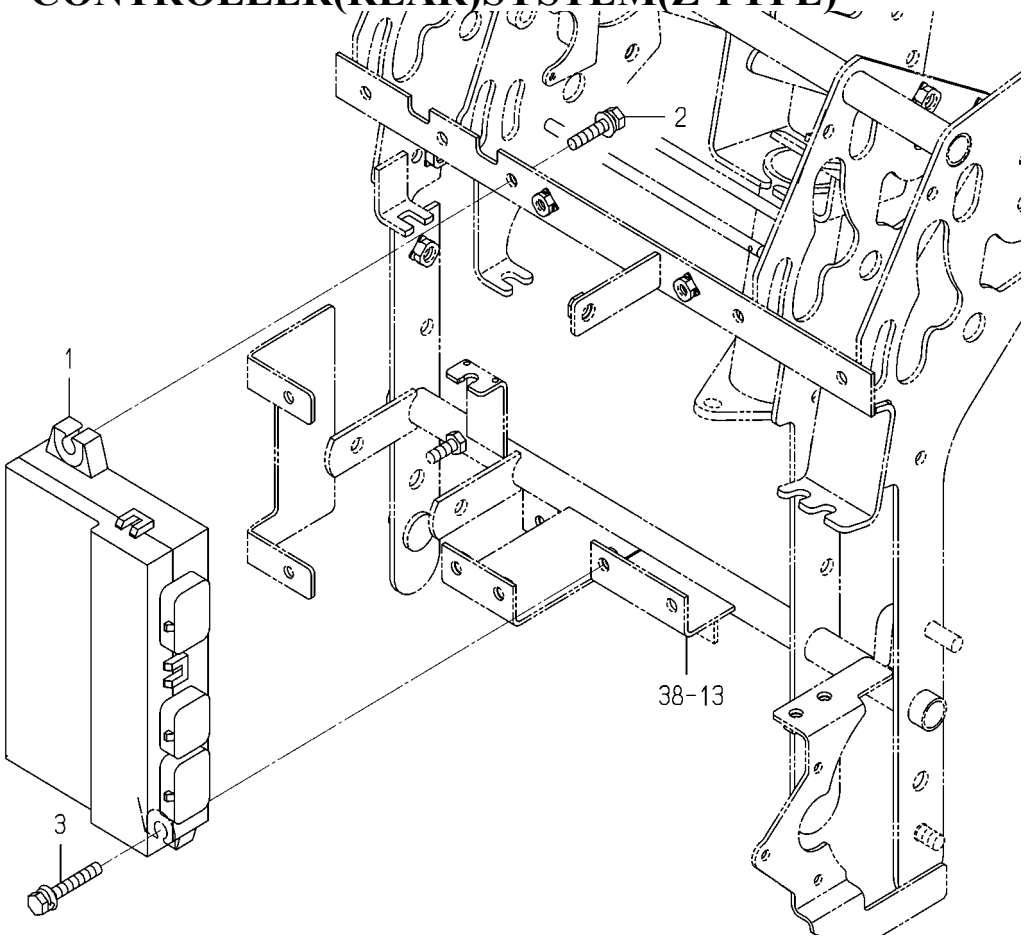


2233-545E-0100

| KEY | PART CODE | DESCRIPTION | SPC | TYPE OF MODEL NP80D E16 | | ITC | COL | GRP | REMARKS |
|---|---|---|---|---|---|---|---|---|---|
| 1 | 2233-545-310-00 | CONTROLLER/8ZE/FRONT | * | 1 | | | | | |
| 2 | V210-360-603-00 | BOLT,SP/M6X30 | * | 1 | | | | | |
| 3 | V210-360-604-00 | BOLT,SP/M6X40 | * | 1 | | | | | |

# FIG. 88 CONTROLLER(REAR)SYSTEM

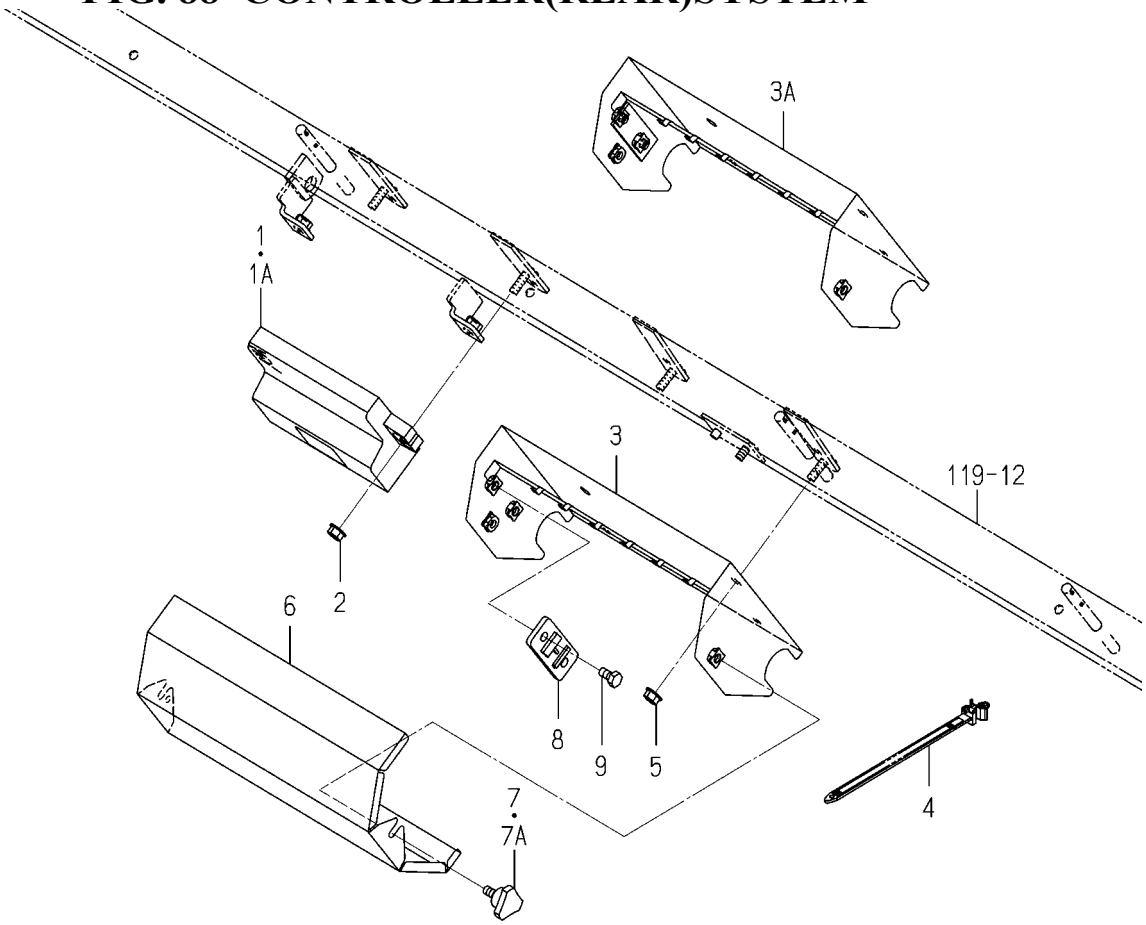


2233-546 -0100

| KEY | PART CODE | DESCRIPTION | SPC | TYPE OF MODEL NP80D E16 | | ITC | COL | GRP | REMARKS |
|---|---|---|---|---|---|---|---|---|---|
| 1 | 2233-546-200-20 | CONTROLLER/8/REAR | * | 1 -80 | | | | | |
| 1A | 2233-546-300-00 | CONTROLLER/8/REAR | * | 1 81- | | | | | |
| 2 | V360-260-006-00 | NUT/WASHER/M6 | * | 2 | | | | | |
| 3 | 2232-546-210-10 | CASE/RELAY COMP | * | 1 -175 | | | 6G | | |
| 3A | 2232-546-210-20 | CASE/RELAY COMP | * | 1 176- | | 1 | 6G | | |
| 4 | 2204-537-002-00 | BAND | * | 1 | | | | | |
| 5 | V360-260-006-00 | NUT/WASHER/M6 | * | 2 | | | | | |
| 6 | 2232-546-001-00 | COVER/RELAY | * | 1 | | | | | |
| 7 | 1716-601-003-00 | BOLT/KNOB/M06X13 | * | 2 -80 | | | | | |
| 7A | 1716-601-003-10 | BOLT/KNOB/M06X13 | * | 2 81- | | 1 | | | |
| 8 | 3659-836-002-00 | BRACKET,FUSE | * | 1 | | | | | |
| 9 | V200-260-601-20 | BOLT/M6X12 | * | 2 | | | | | |

# FIG. 89 STAY(GPS/ANTENNA)SYSTEM(Z TYPE)

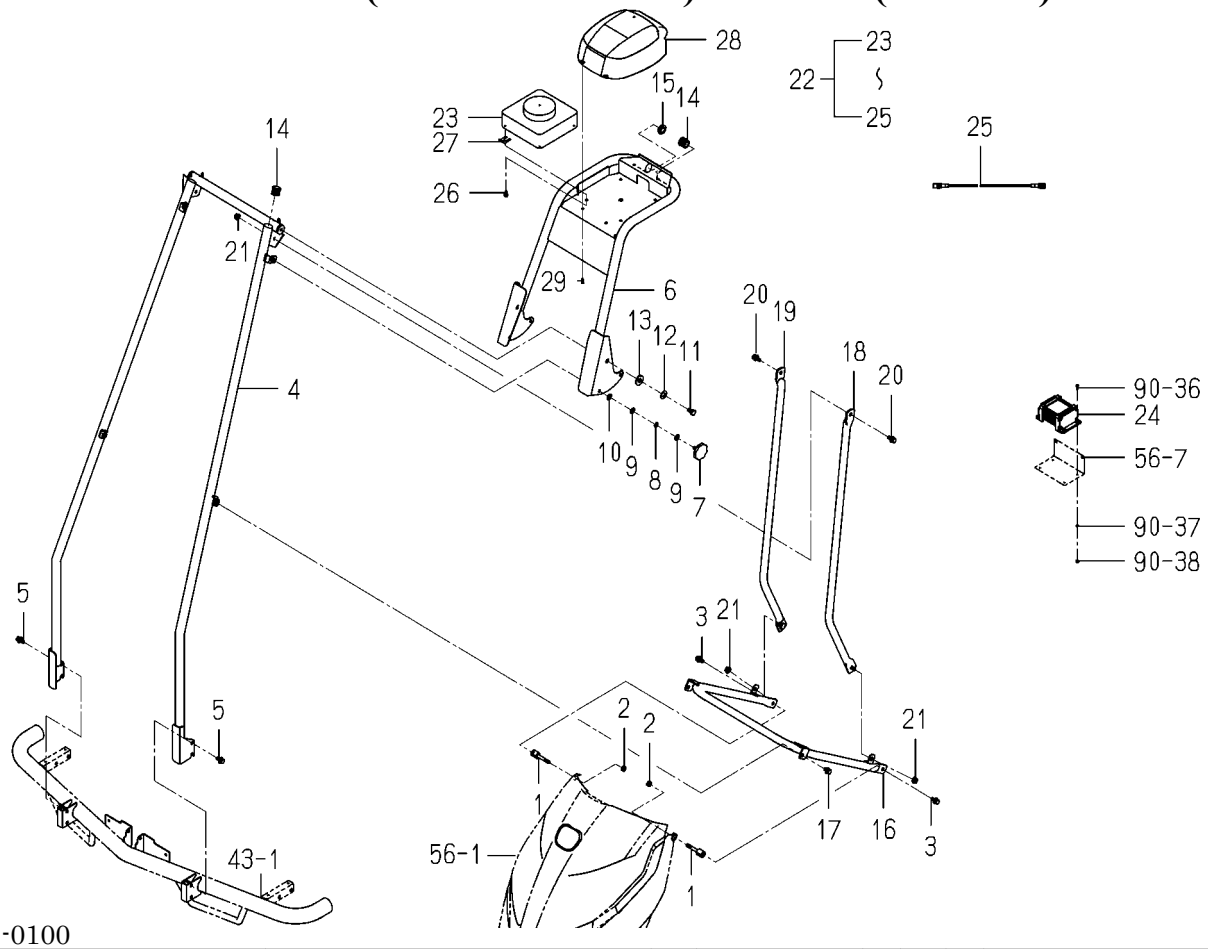


2233-548 -0100

| KEY | PART CODE | DESCRIPTION | SPC | TYPE OF MODEL NP80D | E16 | ITC | COL | GRP | REMARKS |
|---|---|---|---|---|---|---|---|---|---|
| 1 | 2233-548-001-00 | BOLT/FOOD/NP | * | 2 | | | | | |
| 2 | V304-260-008-00 | NUT/M8 | * | 2 | | | | | |
| 3 | V211-360-802-00 | BOLT,SP/M8X20 | * | 2 | | | | | |
| 4 | 2233-548-220-10 | STAY/GPS/LOWER COMP | * | 1 | | | | | |
| 5 | V211-360-802-00 | BOLT,SP/M8X20 | * | 4 | | | | | |
| 6 | 2233-548-290-00 | STAY/GPS COMP | * | 1 | | | | | |
| 7 | 2171-505-005-00 | BOLT/KNOB/M08X20 | * | 2 | | | | | |
| 8 | V401-160-008-00 | WASHER,SP/M8 | * | 2 | | | | | |
| 9 | V411-260-008-00 | WASHER,PL/M8 | * | 4 | | | | | |
| 10 | 2233-548-018-00 | NIRONSETWASHER/M8 | * | 2 | | | | | |
| 11 | 2186-436-007-00 | BOLT | * | 2 | | | | | |
| 12 | 2161-618-003-00 | SPRING/12X25X01 | * | 2 | | | | | |
| 13 | 2140-816-001-00 | WASHER/12X30X3.2 | * | 2 | | | | | |
| 14 | 2232-614-003-00 | CAP/24X18 | * | 2 | | | | | |
| 15 | P121-817-007-00 | GROMMET/15X20X02 | * | 1 | | | | | |
| 16 | 2233-548-280-00 | TUBE/JOINT COMP | * | 1 | | | | | |
| 17 | V211-360-801-60 | BOLT,SP/M8X16 | * | 2 | | | | | |
| 18 | 2233-548-420-00 | TUBE/REIN FORCE/Z/LH | * | 1 | | | | | |
| 19 | 2233-548-430-00 | TUBE/REIN FORCE/Z/RH | * | 1 | | | | | |
| 20 | V211-360-802-00 | BOLT,SP/M8X20 | * | 2 | | | | | |
| 21 | V362-260-008-00 | NUT/WASHER/M8 | * | 4 | | | | | |
| 22 | 2233-548-200-00 | SENSOR/GNSSSET | * | 1 | | | | | |
| 23 | 2233-548-201-00 | SENSOR/GNSS ASSY | * | 1 | | | | | |
| 24 | 2233-548-202-00 | INTERFACE ASSY | * | 1 | | | | | |
| 25 | 2233-548-203-00 | CABLE/GNSS ASSY | * | 1 | | | | | |
| 26 | V120-365-001-60 | SCREW,SP/M5X16 | * | 4 | | | | | |
| 27 | 2213-101-015-10 | SHIM/MUFFLER | * | 2 | | | | | |
| 28 | 2233-548-016-00 | COVER/GNSS | * | 1 | | | | | |
| 29 | 2204-536-209-00 | SCREW | * | 4 | | | | | |
| | | | | | | | | | |

# FIG. 90 CONTROLLER SYSTEM(Z TYPE)(1/2)

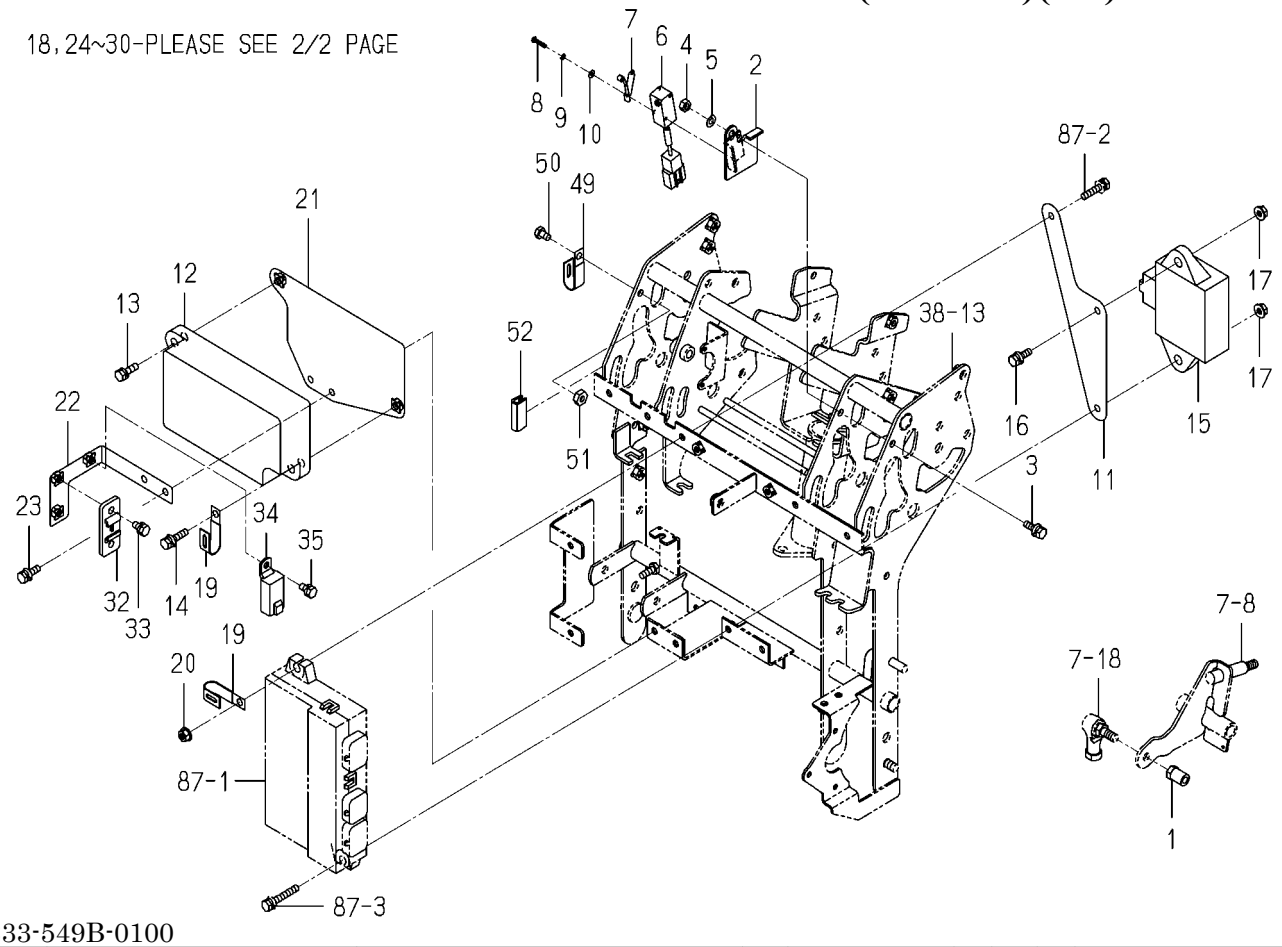


2233-549B-0100

| KEY | PART CODE | DESCRIPTION | SPC | TYPE OF MODEL NP80D E16 | | ITC | COL | GRP | REMARKS |
|---|---|---|---|---|---|---|---|---|---|
| 1 | 2233-547-001-00 | PIN/SENSOR | * | 1 | | | | | |
| 2 | 2233-547-200-10 | PLATE/STAY/SWITCH | * | 1 | | | | | |
| 3 | V200-260-601-60 | BOLT/M6X16 | * | 1 | | | | | |
| 4 | V301-260-006-00 | NUT/M6 | * | 1 | | | | | |
| 5 | V401-160-006-00 | WASHER,SP/M6 | * | 1 | | | | | |
| 6 | 3807-836-350-00 | SWITCH ASSY | * | 1 | | | | | |
| 7 | 3807-836-400-00 | ACTUATOR ASSY | * | 1 | | | | | |
| 8 | V111-163-001-60 | SCREW/M3X16 | * | 2 | | | | | |
| 9 | V411-260-003-00 | WASHER,PL/M3 | * | 2 | | | | | |
| 10 | V401-160-003-00 | WASHER,SP/M3 | * | 2 | | | | | |
| 11 | 2233-549-005-00 | STAY/MINICONTROLLER | * | 1 | | | | | |
| 12 | 2233-549-560-00 | DRIVER/MOTOR/ASIST | * | 1 | | | | | |
| 13 | V210-360-602-00 | BOLT,SP/M6X20 | * | 1 | | | | | |
| 14 | V210-360-602-50 | BOLT,SP/M6X25 | * | 1 | | | | | |
| 15 | 2233-549-200-30 | CONTROLLER/STRAIGHT | * | 1 | | | | | |
| 16 | V210-360-602-00 | BOLT,SP/M6X20 | * | 1 | | | | | |
| 17 | V360-260-006-00 | NUT/WASHER/M6 | * | 2 | | | | | |
| 18 | V360-260-006-00 | NUT/WASHER/M6 | * | 2 | | | | | |
| 19 | 3612-631-001-00 | CLAMP,WINKER B | * | 2 | | | | | |
| 20 | V360-260-006-00 | NUT/WASHER/M6 | * | 1 | | | | | |
| 21 | 2232-549-510-00 | STAY/DRIVER/6Z COMP | * | 1 | | | | | |
| 22 | 2232-549-520-00 | STAY/FUSEBOX COMP | * | 1 | | | | | |
| 23 | V210-360-602-00 | BOLT,SP/M6X20 | * | 2 | | | | | |
| 24 | 2151-810-004-10 | CORRUGATED TUBE/07X1 | * | 1 | | | | | |
| 25 | 2233-581-006-00 | CORRUGATED TUBE/07X0 | * | 1 | | | | | |
| 26 | 2204-409-073-00 | CORRUGATED TUBE/13X1 | * | 1 | | | | | |
| 27 | 2233-549-320-00 | HARNESS/STRAIGHT/E16 | * | 1 | | | | | |
| 28 | 2233-549-321-00 | LABEL/FUSE/Z/E16 | * | 1 | | | | | |
| 29 | 3821-262-202-00 | FUSE/BLADE/32V10A | * | 2 | | | | | |
| 30 | 3824-247-202-00 | FUSE/BLADE/32V05A | * | 2 | | | | | |

# FIG. 90 CONTROLLER SYSTEM(Z TYPE)(2/2)

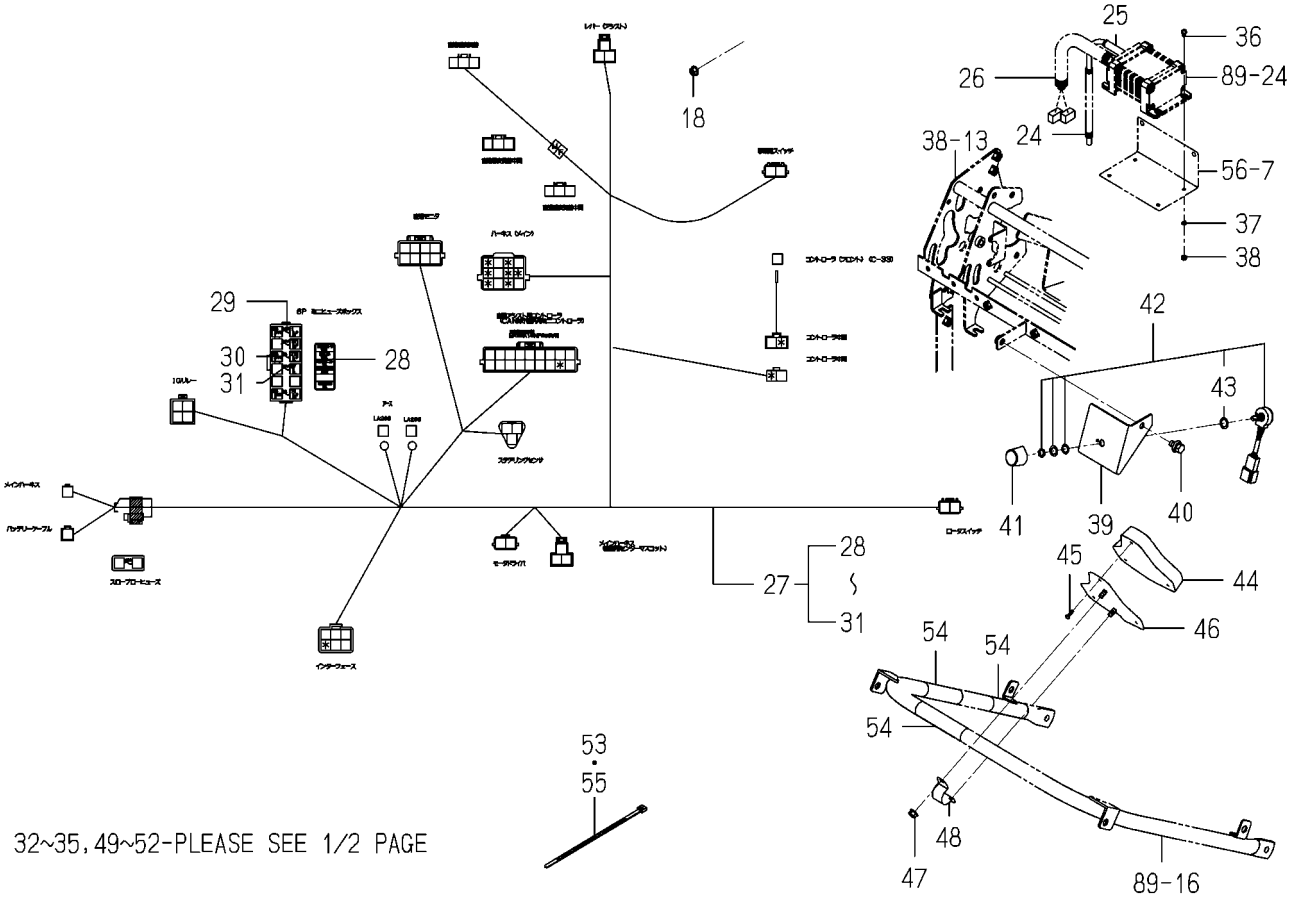


2233-549B-0100

| KEY | PART CODE | DESCRIPTION | SPC | TYPE OF MODEL NP80D E16 | | ITC | COL | GRP | REMARKS |
|---|---|---|---|---|---|---|---|---|---|
| 31 | 3821-262-204-00 | FUSE/BLADE/32V20A | * | 1 | | | | | |
| 32 | 3659-836-002-00 | BRACKET,FUSE | * | 1 | | | | | |
| 33 | V200-260-601-20 | BOLT/M6X12 | * | 2 | | | | | |
| 34 | 1650-658-270-00 | RELAY/4P ASSY | * | 1 | | | | | |
| 35 | V200-260-601-00 | BOLT/M6X10 | * | 1 | | | | | |
| 36 | V120-264-001-20 | SCREW,SEMS/M4X12 | * | 4 | | | | | |
| 37 | V401-160-004-00 | WASHER,SP/M4 | * | 4 | | | | | |
| 38 | V301-260-004-00 | NUT/M4 | * | 4 | | | | | |
| 39 | 2233-549-004-20 | STAY/VOLUME/Z | * | 1 | | | | | |
| 40 | V211-360-801-60 | BOLT,SP/M8X16 | * | 1 | | | | | |
| 41 | 3849-270-402-00 | KNOB/BL | * | 1 | | | | | |
| 42 | 1729-609-240-00 | SWITCH/VR ASSY | * | 1 | | | | | |
| 43 | 1675-695-005-00 | INSULATOR | * | 1 | | | | | |
| 44 | 2233-549-450-00 | MONITOR/STRAIGHT/E16 | * | 1 | | | | | |
| 45 | V195-164-012-10 | SCREW/TAPPING | * | 3 | | | | | |
| 46 | 2233-549-410-00 | STAY/PANEL/NPZ COMP | * | 1 | | | | | |
| 47 | V360-260-006-00 | NUT/WASHER/M6 | * | 2 | | | | | |
| 48 | 2233-549-003-00 | PLATE/MONITOR | * | 1 | | | | | |
| 49 | 3612-631-001-00 | CLAMP,WINKER B | * | 1 | | | | | |
| 50 | V200-260-601-00 | BOLT/M6X10 | * | 1 | | | | | |
| 51 | 1118-606-002-10 | U-NUT | * | 1 | | | | | |
| 52 | 2186-414-002-00 | PROTECTOR | * | 1 | | | | | |
| 53 | 1376-402-003-00 | BAND,WIRE/140 | * | 1 | | | | | |
| 54 | 2233-549-006-10 | SPIRALTUBE/150 | * | 3 | | | | | |
| 55 | 1421-621-038-00 | BAND,WIRE/170 | * | 1 | | | | | |

# FIG. 91 CLUTCH(PLANTING)SYSTEM

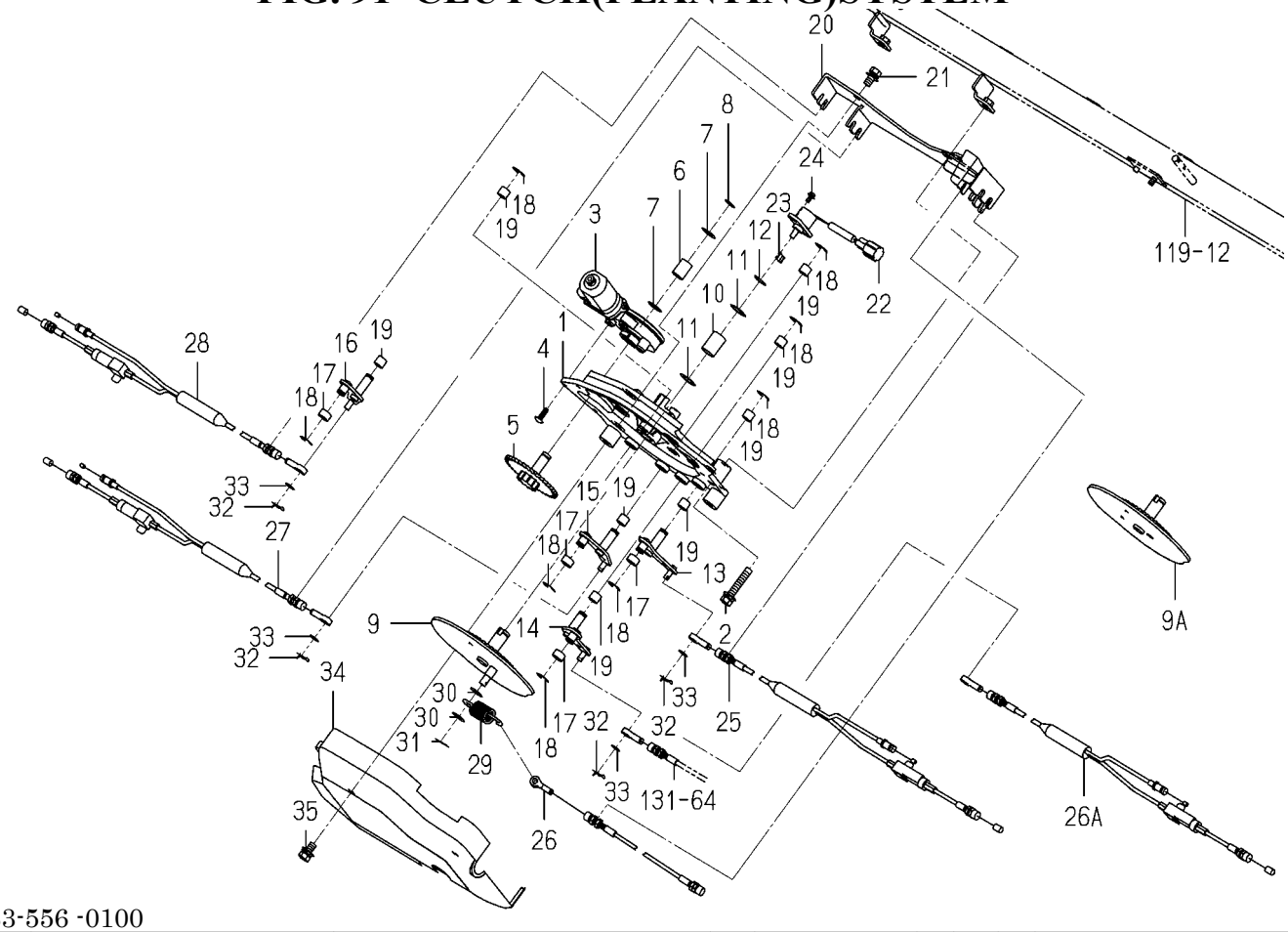


2233-556 -0100

| KEY | PART CODE | DESCRIPTION | SPC | TYPE OF MODEL NP80D | TYPE OF MODEL E16 | ITC | COL | GRP | REMARKS |
|---|---|---|---|---|---|---|---|---|---|
| 1 | 2232-556-005-30 | BASE/MOTOR/CLUTCH | * | 1 | | | | | |
| 2 | V211-360-804-50 | BOLT,SP/M8X45 | * | 2 | | | | | |
| 3 | 3888-726-200-00 | MOTOR/LH ASSY | * | 1 | | | | | |
| 4 | 3888-218-001-00 | TAPPINGSCREW/M5X16 | * | 3 | | | | | |
| 5 | 2232-556-320-10 | SHAFT/RIDGE CLUTCH/C | * | 1 | | | | | |
| 6 | 2232-556-023-10 | BUSH/12X15X20 | * | 1 | | | | | |
| 7 | 8836-703-055-00 | WASHER/M12X20X01 | * | 2 | | | | | |
| 8 | V704-140-012-00 | RING,SNAP/12 C | * | 1 | | | | | |
| 9 | 2232-556-210-00 | GEAR/RIDGECLUTC COMP | * | 1 -275 | | | | | |
| 9A | 2232-556-210-10 | GEAR/RIDGECLUTC COMP | * | 1 276- | | 2 | | | |
| 10 | 2232-556-024-00 | BUSH/15X18X25 | * | 1 | | | | | |
| 11 | 3817-493-005-00 | WASHER/15X23X01 | * | 2 | | | | | |
| 12 | V704-140-015-00 | RING,SNAP/15 C | * | 1 | | | | | |
| 13 | 2232-556-270-10 | ARM/CLUTCH/1 COMP | * | 1 | | | | | |
| 14 | 2232-556-280-10 | ARM/CLUTCH/2 COMP | * | 1 | | | | | |
| 15 | 2232-556-290-10 | ARM/CLUTCH/3 COMP | * | 1 | | | | | |
| 16 | 2232-556-300-10 | ARM/CLUTCH/4 COMP | * | 1 | | | | | |
| 17 | 2232-556-001-00 | COLLAR/10X14X8 | * | 4 | | | | | |
| 18 | V710-140-008-00 | RING,SNAP/8 E | * | 8 | | | | | |
| 19 | 2163-802-007-00 | BUSH/10X12X10 | * | 8 | | | | | |
| 20 | 2232-556-260-00 | PLATE/OUTER COMP | * | 1 | | | | | |
| 21 | V211-360-801-60 | BOLT,SP/M8X16 | * | 2 | | | | | |
| 22 | 2232-556-230-00 | SENSOR/ANGLE/330 | * | 1 | | | | | |
| 23 | 2232-556-032-00 | SPACER/SENSOR/ANGLE | * | 1 | | | | | |
| 24 | V120-364-001-00 | SCREW,SP/M4X10 | * | 2 | | | | | |
| 25 | 2233-556-005-00 | CABLE/RIDGE CLUTCH/8 | * | 1 | | | | | |
| 26 | 2233-556-006-00 | CABLE/RIDGE CLUTCH/8 | * | 1 -175 | | | | | |
| 26A | 2233-556-041-00 | CABLE/RIDGE CLUTCH 2 | * | 1 176- | | | | | |
| 27 | 2233-556-007-00 | CABLE/RIDGE CLUTCH/8 | * | 1 | | | | | |
| 28 | 2233-556-008-00 | CABLE/RIDGE CLUTCH/8 | * | 1 | | | | | |

# FIG. 91 CLUTCH(PLANTING)SYSTEM

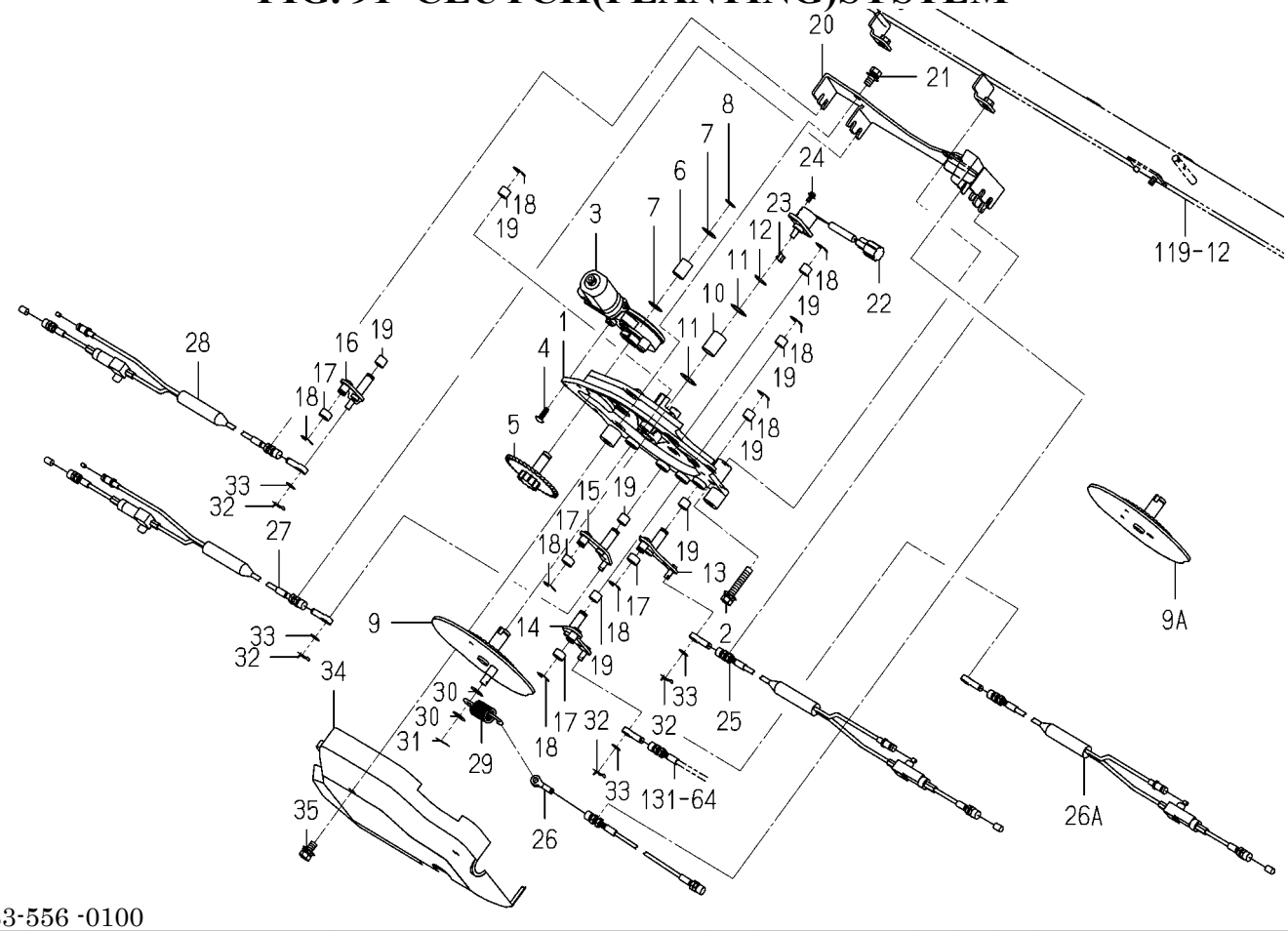


2233-556 -0100

| KEY | PART CODE | DESCRIPTION | SPC | TYPE OF MODEL NP80D E16 | | ITC | COL | GRP | REMARKS |
|---|---|---|---|---|---|---|---|---|---|
| 29 | 2232-556-022-00 | SPRING/HE060 | * | 1 -175 | | | | | |
| 30 | 2140-420-012-10 | WASHER/09X22X02 | * | 2 -175 | | | | | |
| 31 | V500-162-501-50 | PIN,SPLIT/2.5X15 | * | 1 -175 | | | | | |
| 32 | 2161-735-005-00 | PIN | * | 4 | | | | | |
| 33 | V411-260-006-00 | WASHER,PL/M6 | * | 4 | | | | | |
| 34 | 2232-556-007-00 | COVER/RIDGECLUTCH | * | 1 | | | | | |
| 35 | V211-360-801-60 | BOLT,SP/M8X16 | * | 2 | | | | | |

# FIG. 92 DRIVE(ROTOR)SYSTEM(Z TYPE)

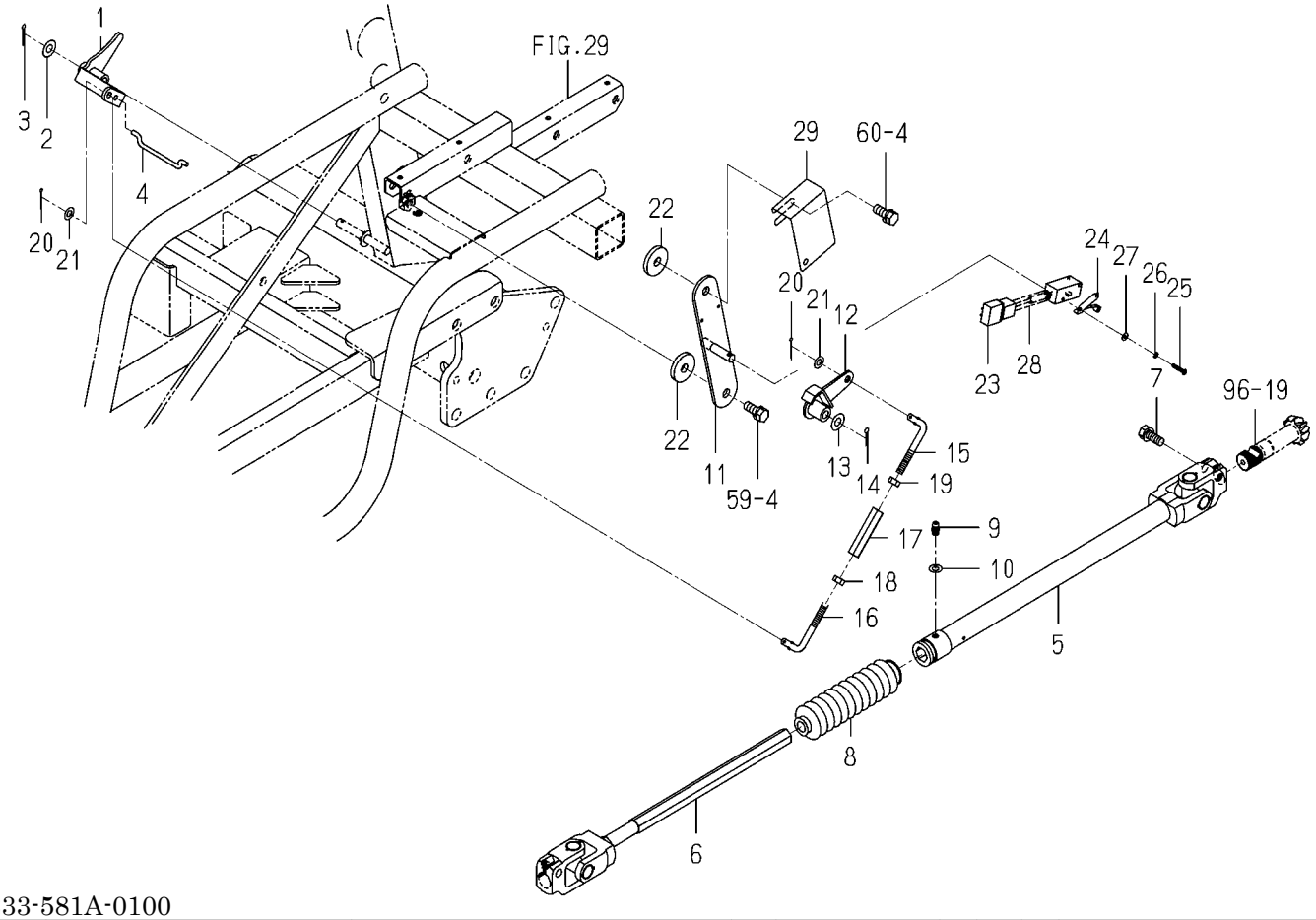


2233-581A-0100

| KEY | PART CODE | DESCRIPTION | SPC | TYPE OF MODEL NP80D E16 | | ITC | COL | GRP | REMARKS |
|---|---|---|---|---|---|---|---|---|---|
| 1 | 2233-581-250-00 | ARM/CLUCH/ROTOR/Z | * | 1 | | | | | |
| 2 | V411-260-008-00 | WASHER,PL/M8 | * | 1 | | | | | |
| 3 | V500-162-002-00 | PIN,SPLIT/2X20 | * | 1 | | | | | |
| 4 | 2232-581-001-00 | ROD/CLUTCH/ROTOR | * | 1 | | | | | |
| 5 | 2232-581-230-00 | SHAFT/ROTOR/REAR/NP | * | 1 | | | | | |
| 6 | 2213-581-200-10 | SHAFT/ROTOR/FRONT/8 | * | 1 | | | | | |
| 7 | V211-560-802-50 | BOLT,S/M8X25/7T | * | 2 | | | | | |
| 8 | 2204-581-049-00 | BOOTS/ROTOR/DRIVE | * | 1 | | | | | |
| 9 | V760-150-000-00 | NIPPLE,GREASE | * | 1 | | | | | |
| 10 | V411-260-006-00 | WASHER,PL/M6 | * | 1 | | | | | |
| 11 | 2233-330-730-10 | PLATE/CLUTCH/ROTOR | * | 1 | | | | | |
| 12 | 2233-330-740-00 | ARM/CLUTCH/ROTO COMP | * | 1 | | | | | |
| 13 | V411-260-008-00 | WASHER,PL/M8 | * | 1 | | | | | |
| 14 | V500-163-001-50 | PIN,SPLIT/3X15 | * | 1 | | | | | |
| 15 | 2233-330-071-00 | ROD/ROTOR | * | 1 | | | | | |
| 16 | 2233-330-072-00 | ROD/ROTOR/L | * | 1 | | | | | |
| 17 | 4319-501-007-00 | TURNBACKLE | * | 1 | | | | | |
| 18 | 2201-422-003-00 | NUT/M6X1.0/LH | * | 1 | | | | | |
| 19 | V301-260-006-00 | NUT/M6 | * | 1 | | | | | |
| 20 | V500-162-002-00 | PIN,SPLIT/2X20 | * | 2 | | | | | |
| 21 | V411-260-006-00 | WASHER,PL/M6 | * | 2 | | | | | |
| 22 | 2132-161-005-00 | WASHER,PULLEY | * | 2 | | | | | |
| 23 | 3807-836-350-00 | SWITCH ASSY | * | 1 | | | | | |
| 24 | 3807-836-400-00 | ACTUATOR ASSY | * | 1 | | | | | |
| 25 | V111-163-001-60 | SCREW/M3X16 | * | 2 | | | | | |
| 26 | V401-160-003-00 | WASHER,SP/M3 | * | 2 | | | | | |
| 27 | V411-260-003-00 | WASHER,PL/M3 | * | 2 | | | | | |
| 28 | 2233-581-006-00 | CORRUGATED TUBE/07X0 | * | 1 | | | | | |
| 29 | 2233-581-005-10 | COVER/ROTASWITCH | * | 1 | | | | | |
| | | | | | | | | | |

# FIG. 93 DRIVE(ROTOR)SYSTEM(EXCEPT Z TYPE)

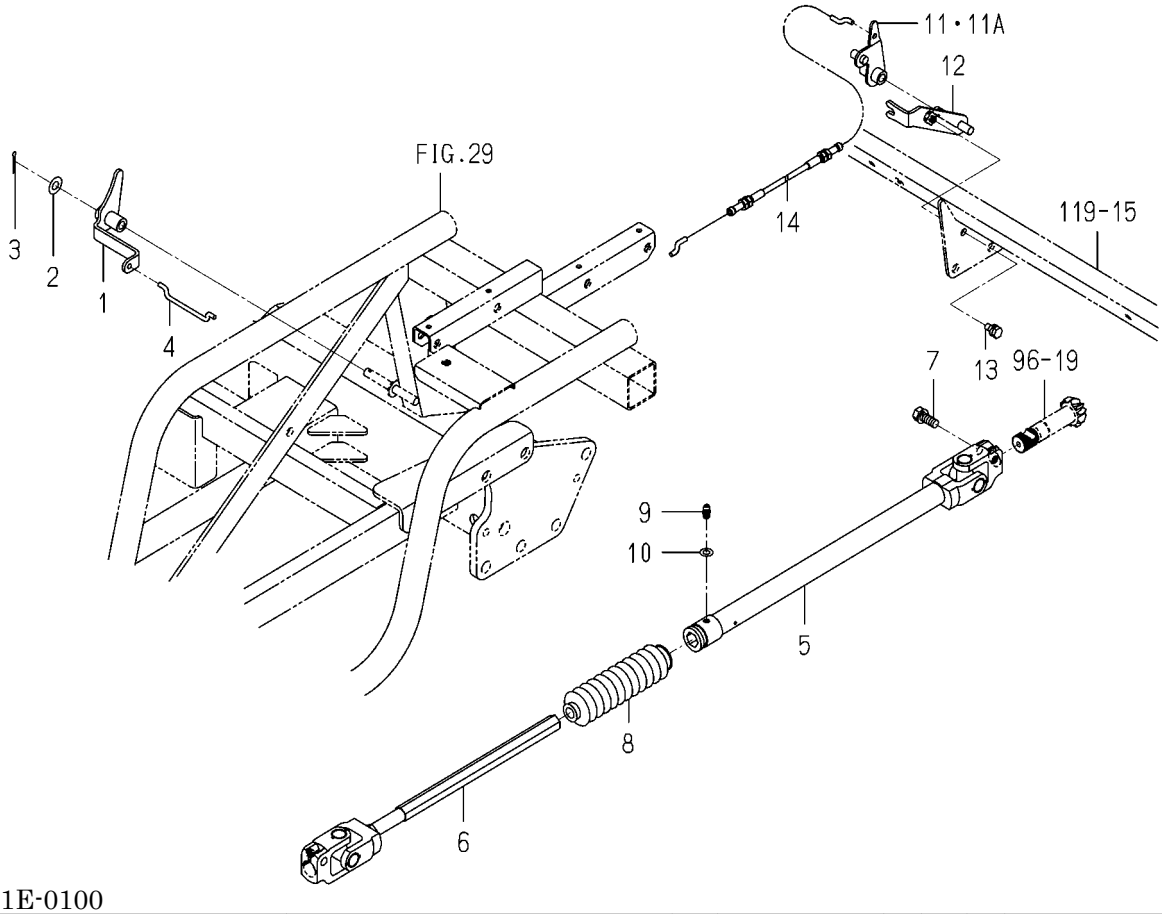


2233-581E-0100

| KEY | PART CODE | DESCRIPTION | SPC | TYPE OF MODEL NP80D E16 | | ITC | COL | GRP | REMARKS |
|---|---|---|---|---|---|---|---|---|---|
| 1 | 2232-581-200-10 | ARM/CLUCH/ROTOR COMP | * | 1 | | | | | |
| 2 | V411-260-008-00 | WASHER,PL/M8 | * | 1 | | | | | |
| 3 | V500-162-002-00 | PIN,SPLIT/2X20 | * | 1 | | | | | |
| 4 | 2232-581-001-00 | ROD/CLUTCH/ROTOR | * | 1 | | | | | |
| 5 | 2232-581-230-00 | SHAFT/ROTOR/REAR/NP | * | 1 | | | | | |
| 6 | 2213-581-200-10 | SHAFT/ROTOR/FRONT/8 | * | 1 | | | | | |
| 7 | V211-560-802-50 | BOLT,S/M8X25/7T | * | 2 | | | | | |
| 8 | 2204-581-049-00 | BOOTS/ROTOR/DRIVE | * | 1 | | | | | |
| 9 | V760-150-000-00 | NIPPLE,GREASE | * | 1 | | | | | |
| 10 | V411-260-006-00 | WASHER,PL/M6 | * | 1 | | | | | |
| 11 | 2233-581-200-00 | ARM/ROTOR/CLUCH COMP | * | 1 -80 | | | | | |
| 11A | 2233-581-200-10 | ARM/ROTOR/CLUCH COMP | * | 1 81- | | 1 | | | |
| 12 | 2233-581-210-00 | PLATE/CABLE COMP | * | 1 | | | | | |
| 13 | V210-260-601-60 | BOLT,S/M6X16 | * | 1 | | | | | |
| 14 | 2233-581-002-00 | CABLE/ROTOR/CLUCH | * | 1 | | | | | |

# FIG. 94 ROTOR SYSTEM

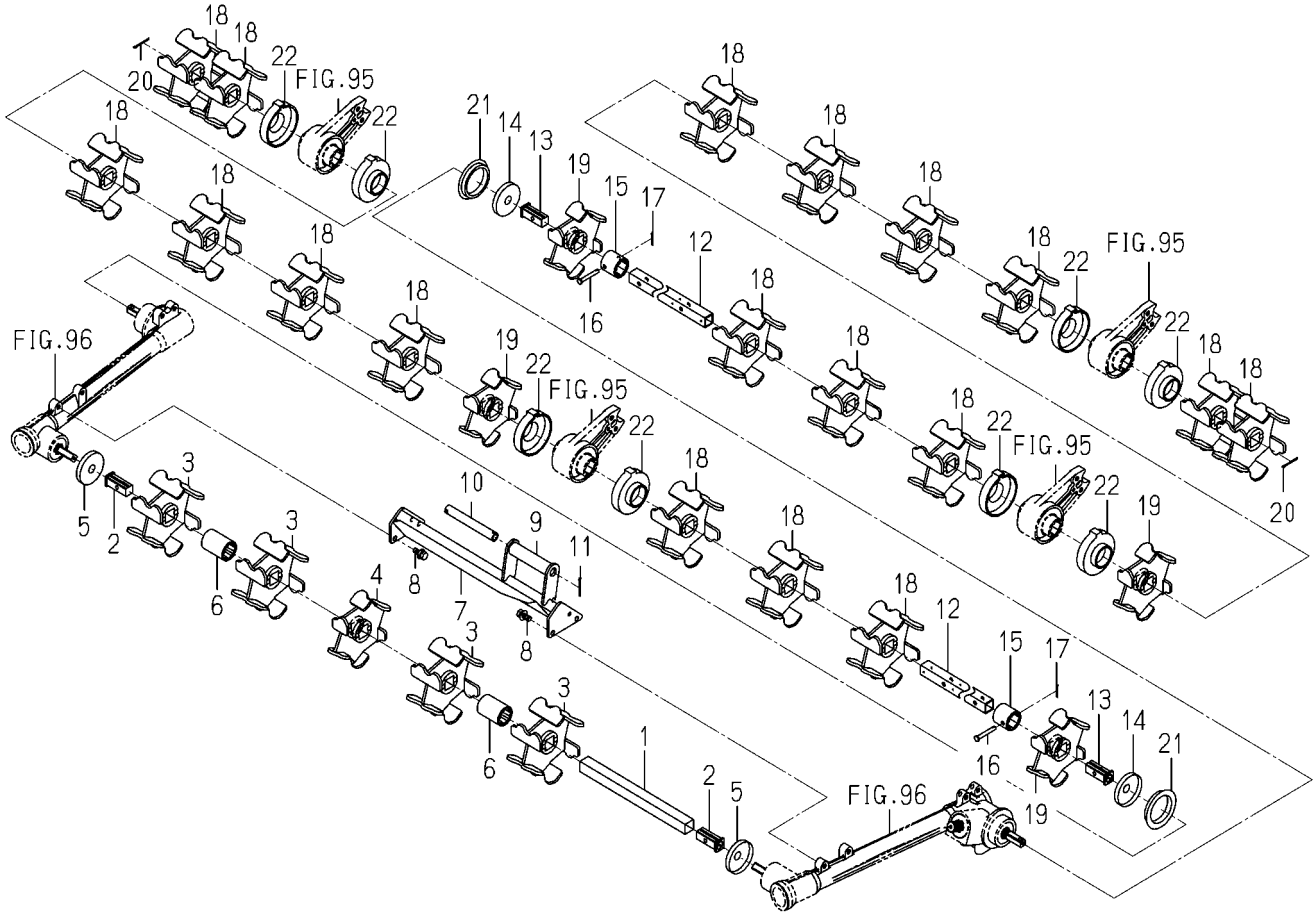


2233-582 -0100

| KEY | PART CODE | DESCRIPTION | SPC | TYPE OF MODEL NP80D E16 | | ITC | COL | GRP | REMARKS |
|---|---|---|---|---|---|---|---|---|---|
| 1 | 2213-582-066-10 | SHAFT/ROTOR/8/CENTER | * | 1 | | 1 | | | |
| 2 | 2213-582-061-00 | HUB/ROTOR/8/M | * | 2 | | | | | |
| 3 | 2204-582-063-00 | ROTOR/72/M | * | 4 | | | | | |
| 4 | 2204-582-062-00 | ROTOR/36/M | * | 1 | | | | | |
| 5 | 2204-582-059-00 | COVER/COIL/M | * | 2 | | | | | |
| 6 | 2213-582-069-00 | HUB/21X36X51/CENTER | * | 2 | | | | | |
| 7 | 2233-582-300-20 | STAY/ROTOR/CENTER/8 | * | 1 | | | | | |
| 8 | V211-360-802-00 | BOLT,SP/M8X20 | * | 4 | | | | | |
| 9 | 2233-582-007-00 | ROLLER/ROTOR/8 | * | 1 | | | | | |
| 10 | 2233-582-008-00 | TUBE/ROLLER/8 | * | 1 | | | | | |
| 11 | 2204-582-015-00 | PIN,SPLIT/3X30/SUS | * | 1 | | | | | |
| 12 | 2233-582-004-10 | SHAFT/ROTOR/8 | * | 2 | | 1 | | | |
| 13 | 2213-582-061-00 | HUB/ROTOR/8/M | * | 2 | | | | | |
| 14 | 2204-582-059-00 | COVER/COIL/M | * | 2 | | | | | |
| 15 | 2213-582-062-00 | HUB/21X36X33 | * | 2 | | | | | |
| 16 | 2213-582-068-00 | PIN/6X44 | * | 2 | | | | | |
| 17 | 2188-208-015-00 | PIN,COTTER/2.5X20/SU | * | 2 | | | | | |
| 18 | 2204-582-063-00 | ROTOR/72/M | * | 18 | | | | | |
| 19 | 2204-582-062-00 | ROTOR/36/M | * | 4 | | | | | |
| 20 | 2204-582-015-00 | PIN,SPLIT/3X30/SUS | * | 2 | | | | | |
| 21 | 2204-582-051-00 | BUSH/ROTOR/M. | * | 2 | | | | | |
| 22 | 2232-582-011-00 | COLLAR/ROTOR/SIDE | * | 8 | | | | | |

# FIG. 95 LEVER(DEPTH/ROTOR)SYSTEM

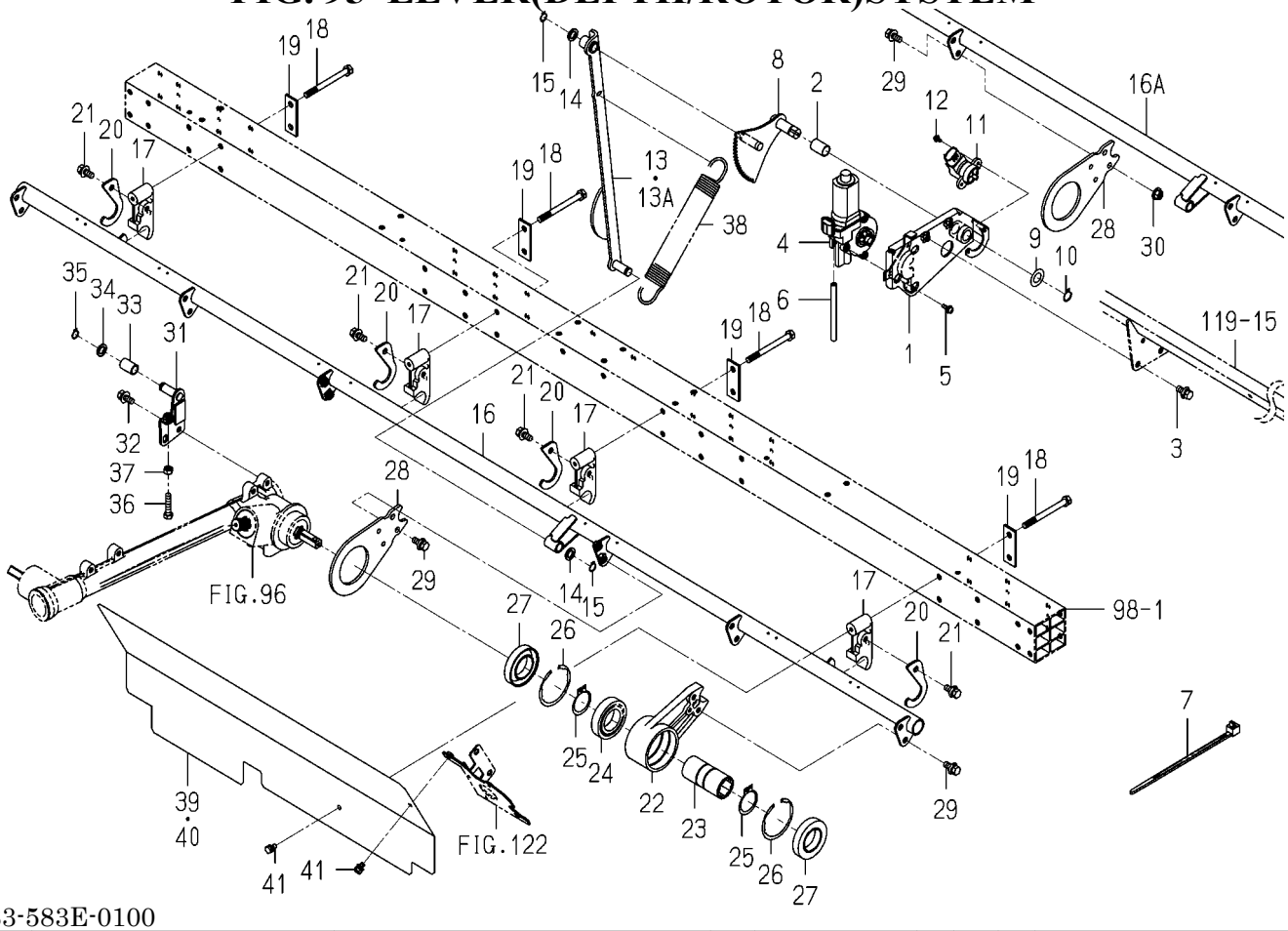


2233-583E-0100

| KEY | PART CODE | DESCRIPTION | SPC | TYPE OF MODEL NP80D E16 | | ITC | COL | GRP | REMARKS |
|---|---|---|---|---|---|---|---|---|---|
| 1 | 2232-583-200-20 | BASE/MOTOR/ROTO COMP | * | 1 | | | | | |
| 2 | 2232-583-005-00 | BUSH/15X17X25 | * | 1 | | | | | |
| 3 | V211-360-802-00 | BOLT,SP/M8X20 | * | 2 | | | | | |
| 4 | 2194-543-200-00 | MOTER | * | 1 | | | | | |
| 5 | V120-365-001-60 | SCREW,SP/M5X16 | * | 3 | | | | | |
| 6 | 2194-543-001-00 | TUBE/100 | * | 1 | | | | | |
| 7 | 2132-545-008-00 | WIRE BAND(92) | * | 1 | | | | | |
| 8 | 2232-583-210-10 | GEAR/ROTOR COMP | * | 1 | | | | | |
| 9 | 3747-342-002-00 | WASHER | * | 1 | | | | | |
| 10 | V704-140-015-00 | RING,SNAP/15 C | * | 1 | | | | | |
| 11 | 1729-662-330-00 | SENSOR/ANGLE/75 ASSY | * | 1 | | | | | |
| 12 | V120-364-001-00 | SCREW,SP/M4X10 | * | 2 | | | | | |
| 13 | 2232-583-220-00 | ARM/MOTOR/ROTOR COMP | * | 1 -80 | | | | | |
| 13A | 2232-583-220-10 | ARM/MOTOR/ROTOR COMP | * | 1 81- | | 1 | | | |
| 14 | 2130-725-006-00 | WASHER | * | 2 | | | | | |
| 15 | V704-140-012-00 | RING,SNAP/12 C | * | 2 | | | | | |
| 16 | 2233-583-240-00 | FRAME/ROTOR HEIGHT/8 | * | 1 -80 | | | | | |
| 16A | 2233-583-240-10 | FRAME/ROTOR HEIGHT/8 | * | 1 81- | | 1 | | | |
| 17 | 2232-583-001-00 | STAY/ROTOR | * | 4 | | | | | |
| 18 | 2232-603-003-10 | BOLT/M8X90 | * | 8 | | | | | |
| 19 | 2232-603-002-10 | PLATE/I/24X64 | * | 4 | | | | | |
| 20 | 2232-583-016-10 | PLATE/HOLDER/ROTOR | * | 4 | | | | | |
| 21 | 2232-645-023-00 | BOLT/SP/M8X20/G | * | 4 | | | | | |
| 22 | 2232-583-003-10 | ARM/ROTOR | * | 4 | | | | | |
| 23 | 2213-583-053-00 | HUB/21X35X76 | * | 4 | | | | | |
| 24 | V600-150-600-70 | BEARING,RB/6007SS | * | 4 | | | | | |
| 25 | V704-140-035-00 | RING,SNAP/35 C | * | 8 | | | | | |
| 26 | V707-140-062-00 | RING,SNAP/R62 | * | 8 | | | | | |
| 27 | 7827-205-010-00 | SEAL/OIL | * | 8 | | | | | |
| 28 | 2233-583-014-10 | PLATE/ARM/ROTOR/8 | * | 2 | | | | | |

# FIG. 95 LEVER(DEPTH/ROTOR)SYSTEM

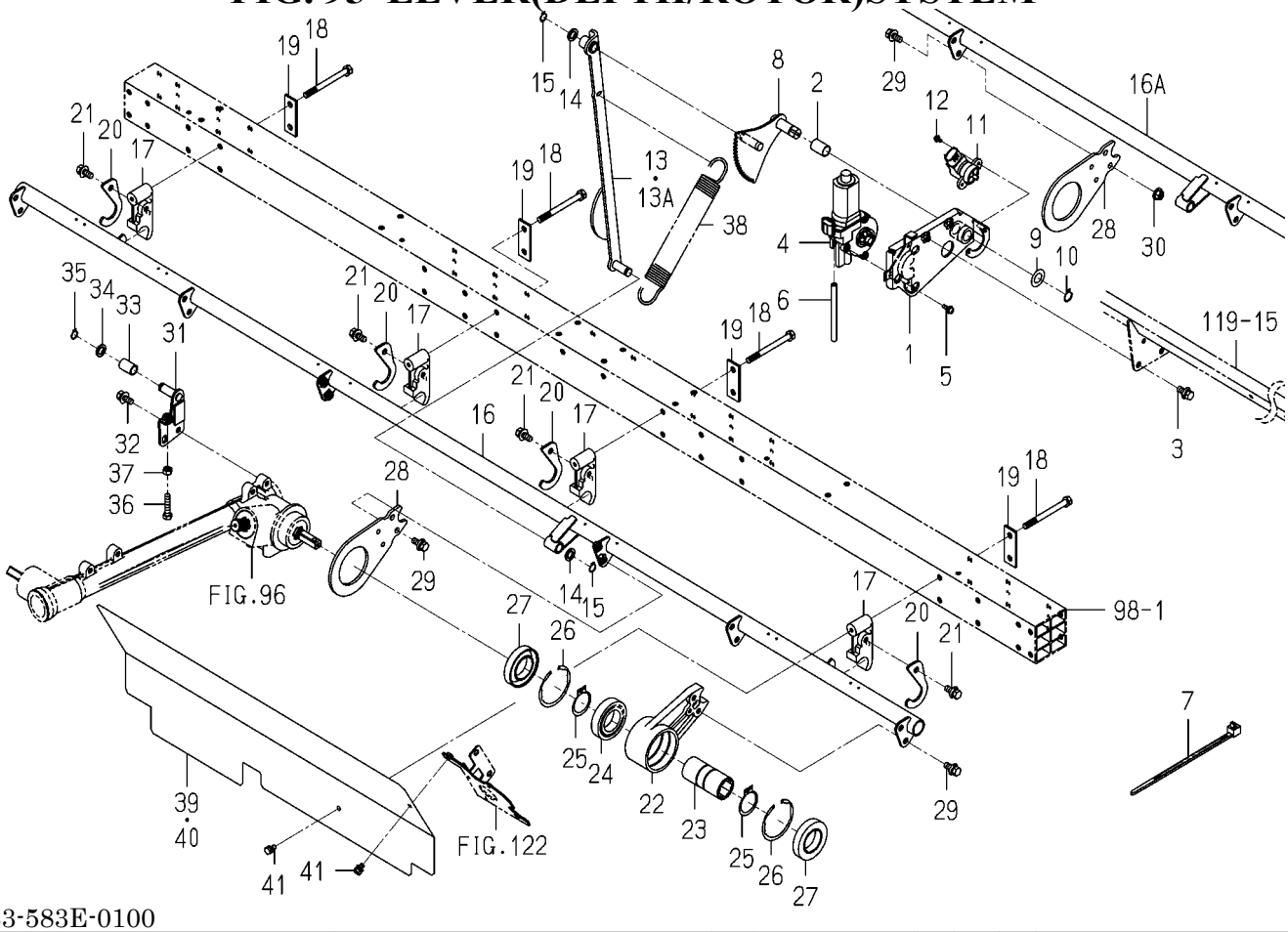


2233-583E-0100

| KEY | PART CODE | DESCRIPTION | SPC | TYPE OF MODEL NP80D E16 | | ITC | COL | GRP | REMARKS |
|---|---|---|---|---|---|---|---|---|---|
| 29 | V211-360-802-00 | BOLT,SP/M8X20 | * | 12 | | | | | |
| 30 | V362-260-008-00 | NUT/WASHER/M8 | * | 4 | | | | | |
| 31 | 2232-583-280-10 | GUIDE/ROTOR COMP | * | 81-1 | | | | | |
| 32 | V211-360-802-00 | BOLT,SP/M8X20 | * | 2 | | | | | |
| 33 | 2232-583-009-00 | COLLAR/12X16X24 | * | 1 | | | | | |
| 34 | 2130-725-006-00 | WASHER | * | 1 | | | | | |
| 35 | V704-140-012-00 | RING,SNAP/12 C | * | 1 | | | | | |
| 36 | V201-260-803-50 | BOLT/M8X35 | * | 1 | | | | | |
| 37 | V304-260-008-00 | NUT/M8 | * | 1 | | | | | |
| 38 | 2232-583-004-00 | SPRING/HE240 | * | 1 | | | | | |
| 39 | 2233-583-017-10 | COVER/ROTOR/8E/LH | * | 1 | | | 5N | | |
| 40 | 2233-583-018-10 | COVER/ROTOR/8E/RH | * | 1 | | | 5N | | |
| 41 | V210-360-601-20 | BOLT,SP/M6X12 | * | 4 | | | | | |

# FIG. 96 CASE(CHAIN)SYSTEM(1/2)

25~30-PLEASE SEE 2/2 PAGE

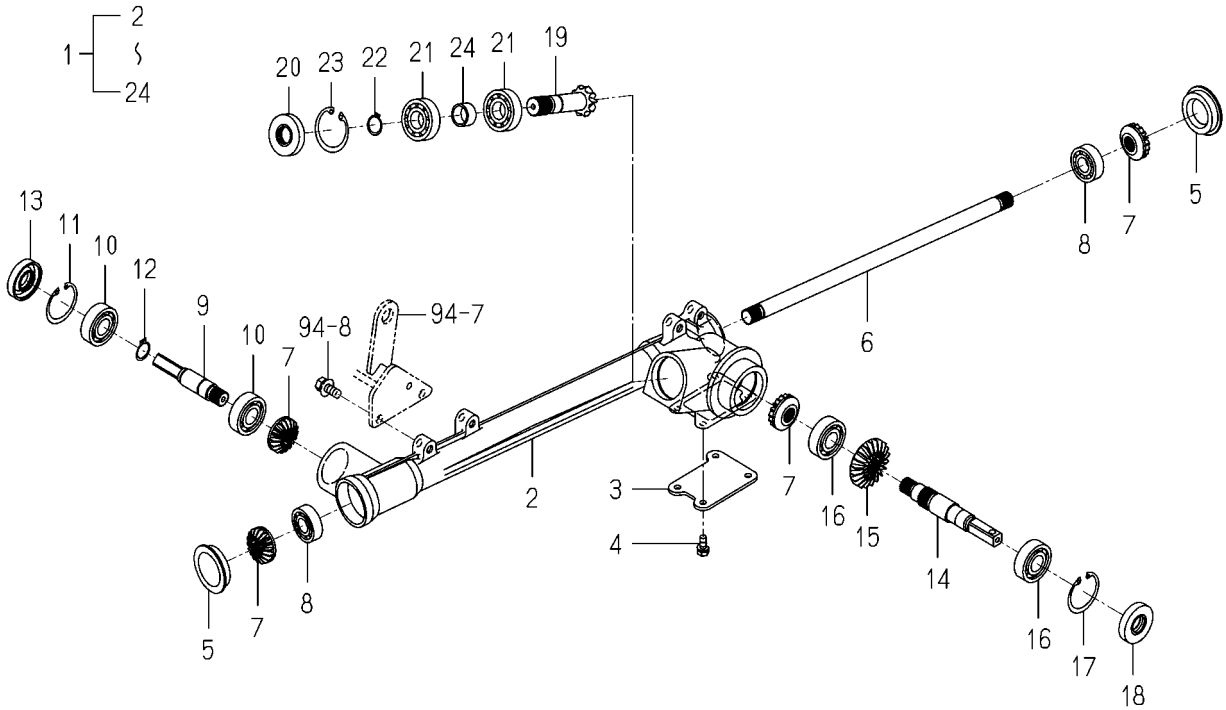


2204-589M-0100

| KEY | PART CODE | DESCRIPTION | SPC | TYPE OF MODEL NP80D | TYPE OF MODEL E16 | ITC | COL | GRP | REMARKS |
|---|---|---|---|---|---|---|---|---|---|
| 1 | 2204-589-500-00 | CASE/CENTERROTOR/LH | * | 1 | | | | | |
| 2 | 2204-589-051-00 | CASE/CENTERROTOR/LH | * | 1 | | | | | |
| 3 | 2204-589-053-00 | COVER/CASE/ROTOR | * | 1 | | | | | |
| 4 | V210-560-601-20 | BOLT,S/M6X12/7T | * | 4 | | | | | |
| 5 | 2204-589-066-00 | PLUG/BOA/42 | * | 2 | | | | | |
| 6 | 2204-589-057-10 | SHAFT/CENTER ROTOR/D | * | 1 | | | | | |
| 7 | 2204-589-068-00 | GEAR/BEVEL/12/FORGIN | * | 4 | | | | | |
| 8 | V600-150-620-20 | BEARING,RB/6202SS | * | 2 | | | | | |
| 9 | 2204-589-058-10 | SHAFT/ROTOR/FRONT | * | 1 | | | | | |
| 10 | V600-110-620-30 | BEARING,RB/6203 | * | 2 | | | | | |
| 11 | V705-140-040-00 | RING,SNAP/40 C | * | 1 | | | | | |
| 12 | V704-140-017-00 | RING,SNAP/17 C | * | 1 | | | | | |
| 13 | 2204-589-065-00 | SEAL/OIL | * | 1 | | | | | |
| 14 | 2204-589-061-10 | SHAFT/ROTOR/REAR/LH | * | 1 | | | | | |
| 15 | 2204-589-063-00 | GEAR/BEVEL/20 | * | 1 | | | | | |
| 16 | V600-110-620-30 | BEARING,RB/6203 | * | 2 | | | | | |
| 17 | V705-140-040-00 | RING,SNAP/40 C | * | 1 | | | | | |
| 18 | 2204-589-065-00 | SEAL/OIL | * | 1 | | | | | |
| 19 | 2204-589-062-00 | GEAR/BEVEL/10 | * | 1 | | | | | |
| 20 | 2204-589-065-00 | SEAL/OIL | * | 1 | | | | | |
| 21 | V600-110-620-30 | BEARING,RB/6203 | * | 2 | | | | | |
| 22 | V704-140-017-00 | RING,SNAP/17 C | * | 1 | | | | | |
| 23 | V705-140-040-00 | RING,SNAP/40 C | * | 1 | | | | | |
| 24 | 2204-589-067-00 | COLLAR/18X22X12 | * | 1 | | | | | |
| 25 | 2204-589-510-00 | CASE/CENTERROTOR/RH | * | 1 | | | | | |
| 26 | 2204-589-052-00 | CASE/CENTERROTOR/RH | * | 1 | | | | | |
| 27 | 2204-589-066-00 | PLUG/BOA/42 | * | 2 | | | | | |
| 28 | 2204-589-057-10 | SHAFT/CENTER ROTOR/D | * | 1 | | | | | |
| 29 | 2204-589-068-00 | GEAR/BEVEL/12/FORGIN | * | 4 | | | | | |
| 30 | V600-150-620-20 | BEARING,RB/6202SS | * | 2 | | | | | |

# FIG. 96 CASE(CHAIN)SYSTEM(2/2)

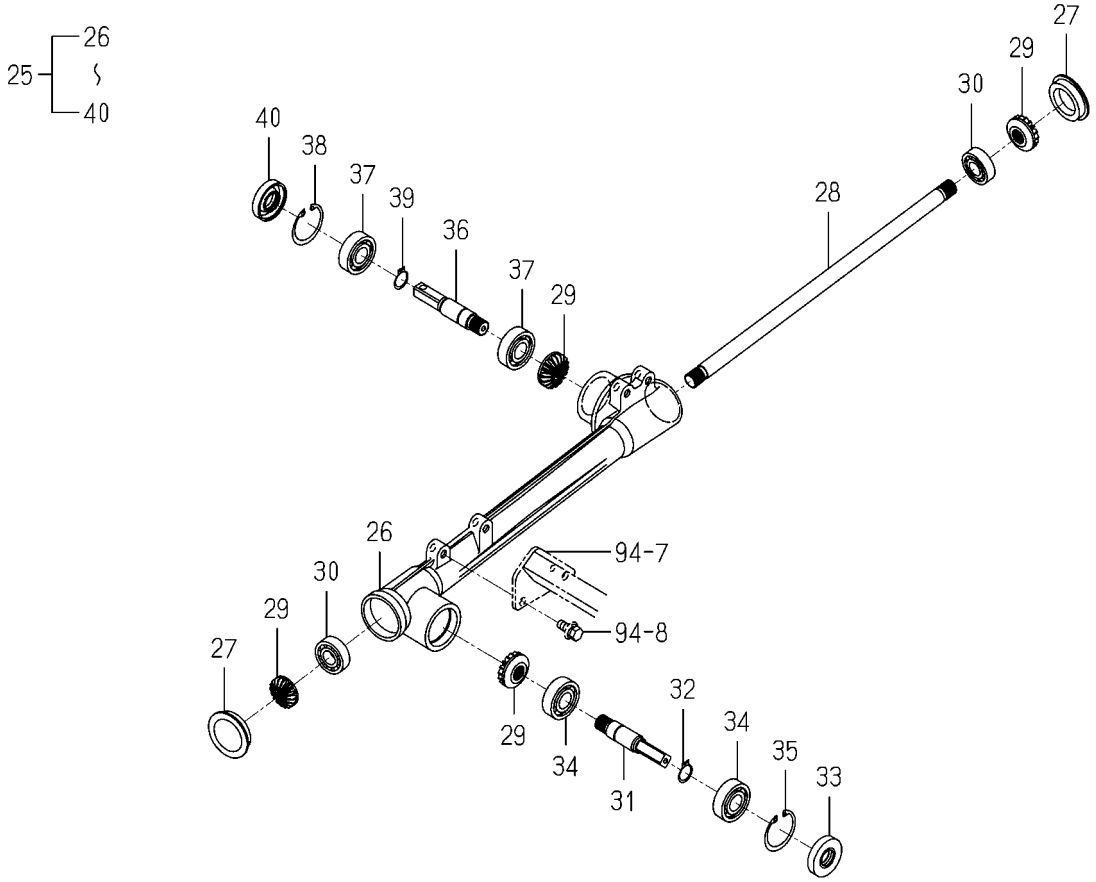


2204-589M-0100

| KEY | PART CODE | DESCRIPTION | SPC | TYPE OF MODEL NP80D E16 | | ITC | COL | GRP | REMARKS |
|---|---|---|---|---|---|---|---|---|---|
| 31 | 2204-589-058-10 | SHAFT/ROTOR/FRONT | * | 1 | | | | | |
| 32 | V704-140-017-00 | RING,SNAP/17 C | * | 1 | | | | | |
| 33 | 2204-589-065-00 | SEAL/OIL | * | 1 | | | | | |
| 34 | V600-110-620-30 | BEARING,RB/6203 | * | 2 | | | | | |
| 35 | V705-140-040-00 | RING,SNAP/40 C | * | 1 | | | | | |
| 36 | 2204-589-059-10 | SHAFT/ROTOR/REAR/RH | * | 1 | | | | | |
| 37 | V600-110-620-30 | BEARING,RB/6203 | * | 2 | | | | | |
| 38 | V705-140-040-00 | RING,SNAP/40 C | * | 1 | | | | | |
| 39 | V704-140-017-00 | RING,SNAP/17 C | * | 1 | | | | | |
| 40 | 2204-589-065-00 | SEAL/OIL | * | 1 | | | | | |

# FIG. 97 LIFT SYSTEM

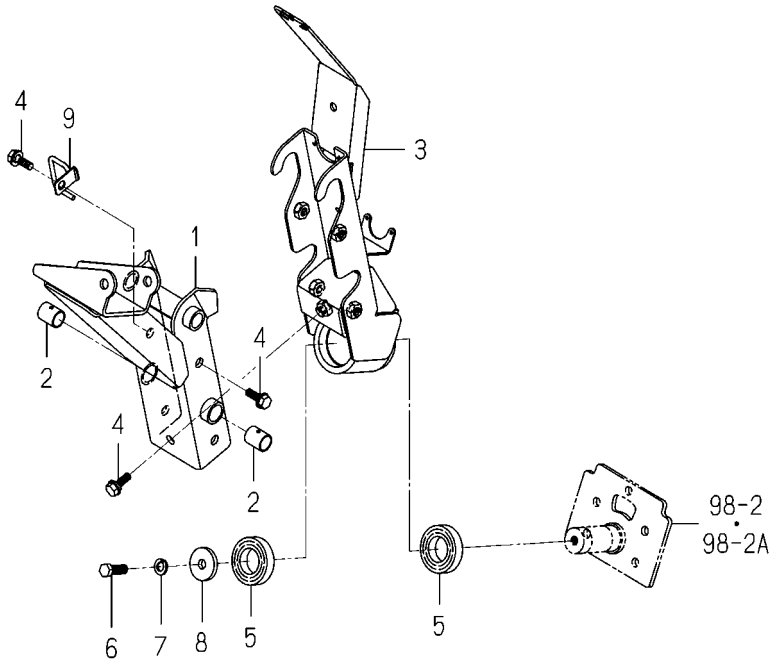


2233-601 -0100

| KEY | PART CODE | DESCRIPTION | SPC | TYPE OF MODEL NP80D E16 | | ITC | COL | GRP | REMARKS |
|---|---|---|---|---|---|---|---|---|---|
| 1 | 2233-601-200-00 | LIFT/8 COMP | * | 1 | | | | | |
| 2 | P112-711-201-00 | BUSH/18X21X25 | * | 2 | | | | | |
| 3 | 2233-601-210-30 | HITCH/8 COMP | * | 1 | | | | | |
| 4 | 2194-338-003-20 | BOLT/M10X25 | * | 5 | | | | | |
| 5 | V600-150-600-60 | BEARING,RB/6006SS | * | 2 | | | | | |
| 6 | 2232-601-001-00 | BOLT/M10X30/7T/G | * | 1 | | | | | |
| 7 | V401-160-010-00 | WASHER,SP/M10 | * | 1 | | | | | |
| 8 | 2232-601-002-00 | WASHER/11X38X06/G | * | 1 | | | | | |
| 9 | 2233-601-310-00 | GUIDE/HARNESS/LIFT | * | 1 | | | | | |

# FIG. 98 RAIL(PLANTING)SYSTEM

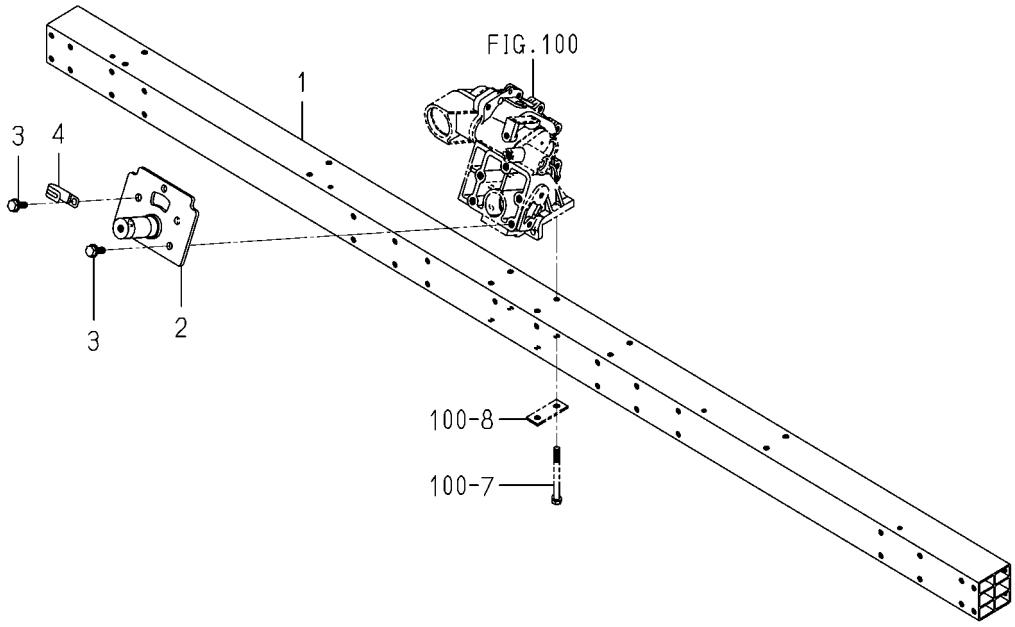


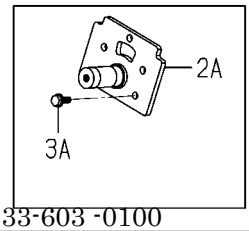


2233-603 -0100

| KEY | PART CODE | DESCRIPTION | SPC | TYPE OF MODEL NP80D E16 | | ITC | COL | GRP | REMARKS |
|---|---|---|---|---|---|---|---|---|---|
| 1 | 2233-603-004-00 | RAIL/PLANTING/8 | * | 1 | | | | | |
| 2 | 2233-603-220-00 | BRACKET/ROLLING/8 | * | 1 -80 | | | | | |
| 2A | 2233-603-220-20 | BRACKET/ROLLING/8 | * | 1 81- | | 3 | | | |
| 3 | 2232-603-011-00 | BOLT/SEAL/M10X25/S/G | * | 5 -80 | | | | | |
| 3A | 2232-603-012-00 | BOLT/SEAL/M10X30/S/G | * | 5 81- | | | | | |
| 4 | 3737-172-011-00 | CLAMP,HARNESS | * | 1 | | | | | |

# FIG. 99 LINK(FLOAT)SYSTEM

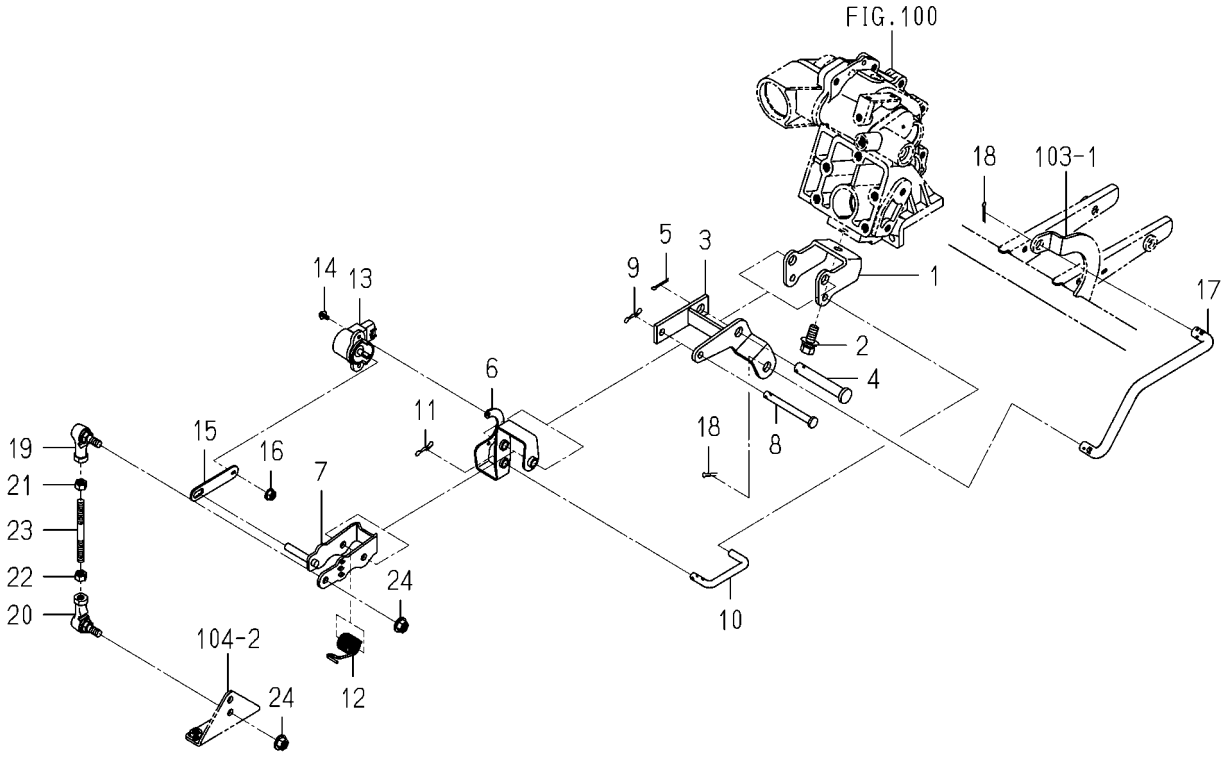


2232-605 -0100

| KEY | PART CODE | DESCRIPTION | SPC | TYPE OF MODEL NP80D E16 | | ITC | COL | GRP | REMARKS |
|---|---|---|---|---|---|---|---|---|---|
| 1 | 2232-605-007-10 | STAY/ANGLE | * | 1 | | | | | |
| 2 | 2232-605-017-00 | BOLT/SP/M10X25/G | * | 1 | | | | | |
| 3 | 2232-605-210-40 | STAY/FLOAT/CENTER | * | 1 | | | | | |
| 4 | 2232-605-008-00 | PIN/12X82 | * | 1 | | | | | |
| 5 | V500-163-002-00 | PIN,SPLIT/3X20 | * | 1 | | | | | |
| 6 | 2232-605-240-10 | PLATE/LINK/SENSOR | * | 1 | | | | | |
| 7 | 2232-605-230-40 | ARM/EFLOATSENSE COMP | * | 1 | | | | | |
| 8 | 2137-330-004-00 | PIN,FLOAT | * | 1 | | | | | |
| 9 | 2161-735-006-00 | PIN/STOPPER/8 | * | 1 | | | | | |
| 10 | 2232-605-012-10 | ROD/LINK | * | 1 | | | | | |
| 11 | 2161-735-006-00 | PIN/STOPPER/8 | * | 1 | | | | | |
| 12 | 2232-605-011-10 | SPRING/HT018 | * | 1 | | | | | |
| 13 | 1729-662-340-00 | SENSOR/ANGLE/110/R | * | 1 | | | | | |
| 14 | V120-364-001-00 | SCREW,SP/M4X10 | * | 2 | | | | | |
| 15 | 2232-605-010-10 | PLATE/SENSOR/FLOAT | * | 1 | | | | | |
| 16 | V360-260-006-00 | NUT/WASHER/M6 | * | 1 | | | | | |
| 17 | 2232-605-006-20 | ROD/ANGLE | * | 1 | | | | | |
| 18 | V500-163-002-00 | PIN,SPLIT/3X20 | * | 2 | | | | | |
| 19 | 1560-695-021-00 | JOINT BALL M08RH | * | 1 | | | | | |
| 20 | 1560-695-022-00 | JOINT BALL M08LH | * | 1 | | | | | |
| 21 | V304-260-008-00 | NUT/M8 | * | 1 | | | | | |
| 22 | 1560-132-007-30 | NUT/LH/M08 | * | 1 | | | | | |
| 23 | 2232-605-016-20 | ROD/FLOAT | * | 1 | | | | | |
| 24 | V362-260-008-00 | NUT/WASHER/M8 | * | 2 | | | | | |

# FIG.100 SLIDE SYSTEM

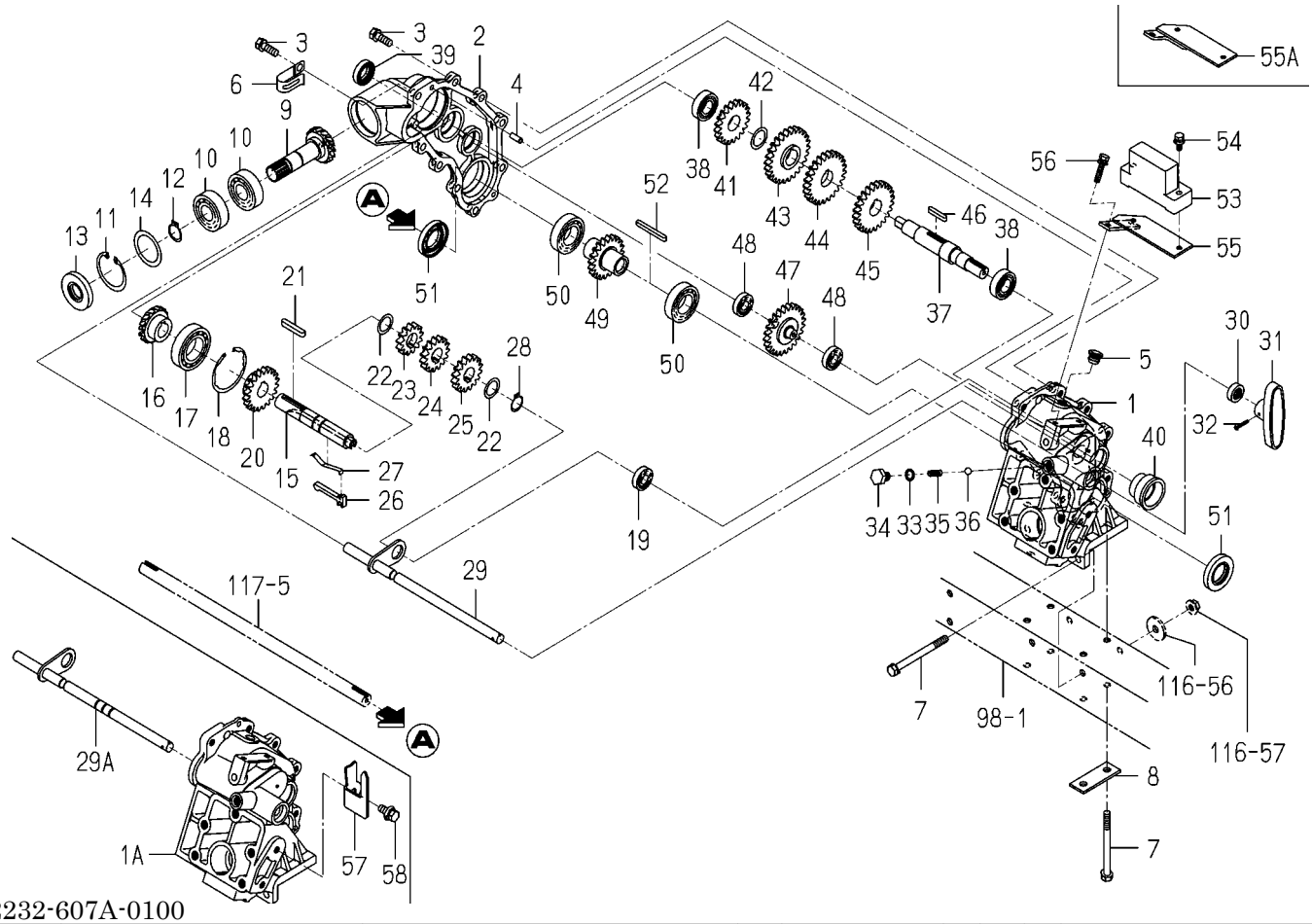


2232-607A-0100

| KEY | PART CODE | DESCRIPTION | SPC | TYPE OF MODEL NP80D E16 | | ITC | COL | GRP | REMARKS |
|---|---|---|---|---|---|---|---|---|---|
| 1 | 2232-607-001-20 | CASE/SEND/LH | * | 1 -80 | | | | | |
| 1A | 2232-607-001-30 | CASE/SEND/LH | * | 1 81- | | 3 | | | |
| 2 | 2232-607-002-00 | CASE/SEND/LH | * | 1 | | | | | |
| 3 | V211-260-802-50 | BOLT,S/M8X25 | * | 9 | | | | | |
| 4 | V522-100-601-60 | PIN,ST,A/6X16 | * | 2 | | | | | |
| 5 | 2142-736-236-00 | PLUG | * | 1 | | | | | |
| 6 | 1425-621-004-00 | HOLDER/JE/9-9 | * | 1 | | | | | |
| 7 | 2232-603-003-10 | BOLT/M8X90 | * | 6 | | | | | |
| 8 | 2232-603-002-10 | PLATE/I/24X64 | * | 2 | | | | | |
| 9 | 2232-607-003-10 | SHAFT/PLANTING/IN | * | 1 | | | | | |
| 10 | V600-110-620-40 | BEARING,RB/6204 | * | 2 | | | | | |
| 11 | V705-140-047-00 | RING,SNAP/47 C | * | 1 | | | | | |
| 12 | V704-140-020-00 | RING,SNAP/20 C | * | 1 | | | | | |
| 13 | V744-120-470-70 | SEAL,OIL/TC20477 | * | 1 | | | | | |
| 14 | 2232-607-027-00 | SHIM/35X47X0.2 | * | 1 | | | | | |
| 15 | 2232-607-004-00 | SHAFT/SEND | * | 1 | | | | | |
| 16 | 2232-607-019-10 | GEAR/BEVEL/15 | * | 1 | | | | | |
| 17 | V600-110-600-60 | BEARING,RB/6006 | * | 1 | | | | | |
| 18 | V707-140-055-00 | RING,SNAP/R55 | * | 1 | | | | | |
| 19 | V600-110-600-10 | BEARING,RB/6001 | * | 1 | | | | | |
| 20 | 2232-607-005-20 | GEAR/SPUR/20 | * | 1 | | | | | |
| 21 | 3565-403-008-00 | KEY,CARRIER STAR | * | 1 | | | | | |
| 22 | 3555-404-008-00 | COLLAR, CARRIER | * | 2 | | | | | |
| 23 | 2232-607-008-00 | GEAR/SPUR/13/24TIMES | * | 1 | | | | | |
| 24 | 2232-607-009-00 | GEAR/SPUR/15/20TIMES | * | 1 | | | | | |
| 25 | 2232-607-011-00 | GEAR/SPUR/16/18TIMES | * | 1 | | | | | |
| 26 | 2213-607-041-10 | KNOCK/SEND/PZ8 | * | 1 | | | | | |
| 27 | 2213-607-042-20 | SPRING/SEND/PZ8 | * | 1 | | | | | |
| 28 | V704-140-018-00 | RING,SNAP/18 C | * | 1 | | | | | |
| 29 | 2232-607-210-00 | SHIFTER/SEND COMP | * | 1 -80 | | | | | |

# FIG.100 SLIDE SYSTEM

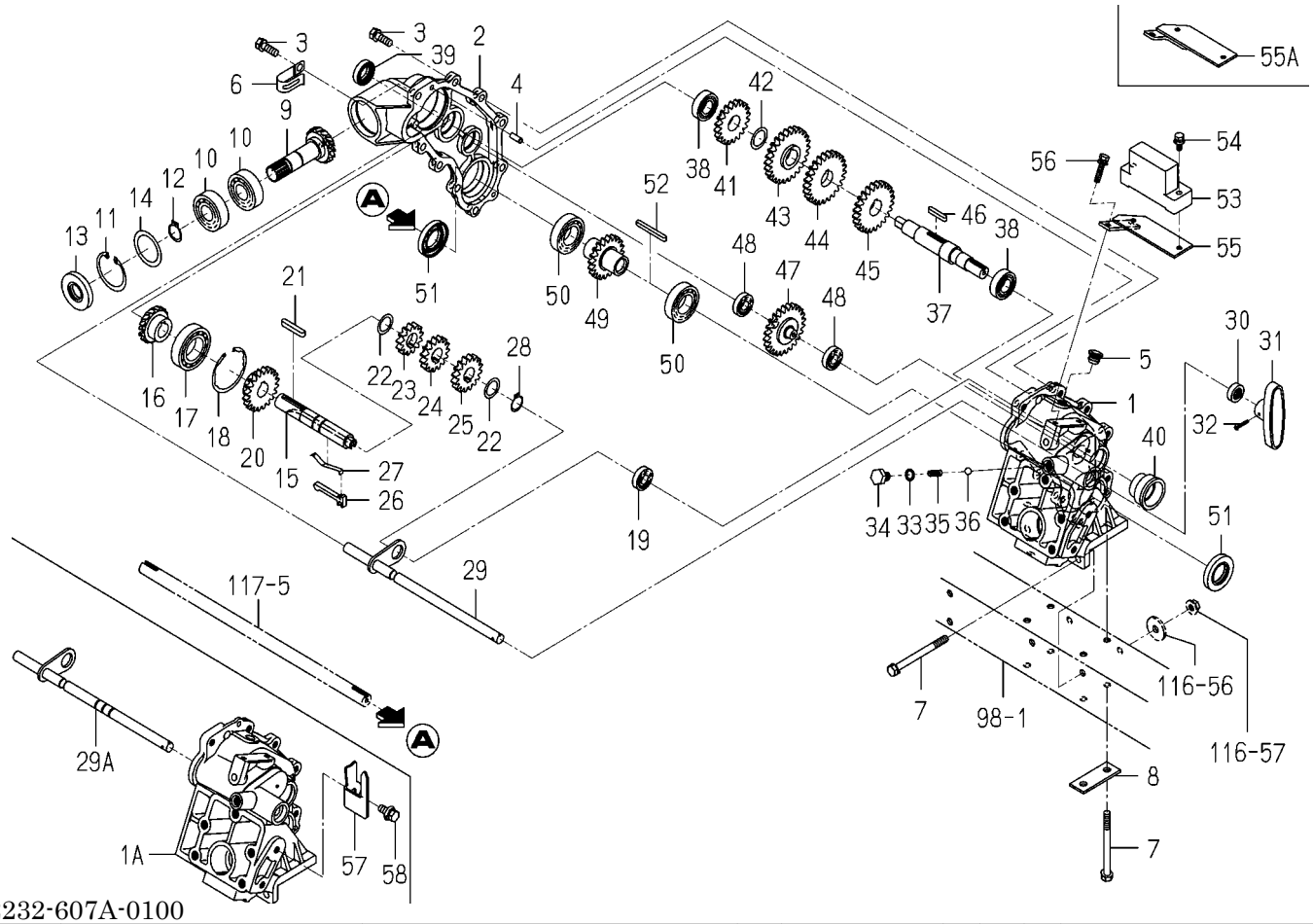


2232-607A-0100

| KEY | PART CODE | DESCRIPTION | SPC | TYPE OF MODEL NP80D E16 | | ITC | COL | GRP | REMARKS |
|---|---|---|---|---|---|---|---|---|---|
| 29A | 2232-607-240-00 | SHIFTER/SEND/3 COMP | * | 1 81- | | | | | |
| 30 | V744-112-220-70 | SEAL,OIL/TC12227 | * | 1 | | | | | |
| 31 | 2130-610-012-00 | LEVER | * | 1 | | | | | |
| 32 | V111-163-002-00 | SCREW/M3X20 | * | 1 | | | | | |
| 33 | V720-101-901-00 | O-RING/1A,P10 | * | 1 | | | | | |
| 34 | 2201-201-002-00 | BOLT/M10X12 | * | 1 | | | | | |
| 35 | 2213-422-022-00 | SPRING/HC021 | * | 1 | | | | | |
| 36 | V682-200-001-00 | BALL,STEEL | * | 1 | | | | | |
| 37 | 2232-607-012-00 | SHAFT/COUNTER/SEND | * | 1 | | | | | |
| 38 | V600-110-600-30 | BEARING,RB/6003 | * | 2 | | | | | |
| 39 | V744-117-300-70 | SEAL,OIL/TC17307 | * | 1 | | | | | |
| 40 | 2204-607-022-00 | SEAL,OIL | * | 1 | | | | | |
| 41 | 2232-607-020-00 | GEAR/SPUR/20 | * | 1 | | | | | |
| 42 | 2110-325-003-00 | SHIM,SAFETY CLUTCH | * | 1 | | | | | |
| 43 | 2232-607-014-00 | GEAR/SPUR/26/24TIMES | * | 1 | | | | | |
| 44 | 2232-607-015-00 | GEAR/SPUR/25/20TIMES | * | 1 | | | | | |
| 45 | 2232-607-016-00 | GEAR/SPUR/24/18TIMES | * | 1 | | | | | |
| 46 | 1308-230-002-00 | KEY | * | 1 | | | | | |
| 47 | 2232-607-017-10 | GEAR/SPUR/24 | * | 1 | | | | | |
| 48 | V600-110-600-10 | BEARING,RB/6001 | * | 2 | | | | | |
| 49 | 2232-607-018-00 | GEAR/SPUR/20 | * | 1 | | | | | |
| 50 | V600-110-600-50 | BEARING,RB/6005 | * | 2 | | | | | |
| 51 | V744-125-450-70 | SEAL,OIL/TC25457 | * | 2 | | | | | |
| 52 | 2232-702-003-00 | KEY/05X05X50 | * | 1 | | | | | |
| 53 | 1690-505-240-00 | SENSOR/SLOPE ASSY | * | 1 | | | | | |
| 54 | V210-360-603-00 | BOLT,SP/M6X30 | * | 2 | | | | | |
| 55 | 2232-607-230-00 | STAY/SENSOR/SLOPE | * | 1 -175 | | | | | |
| 55A | 2232-607-230-10 | STAY/SENSOR/SLOPE | * | 1 176- | | 1 | | | |
| 56 | V210-360-601-60 | BOLT,SP/M6X16 | * | 2 | | | | | |
| 57 | 2232-607-031-00 | PLATE/INDICATOR | * | 1 81- | | | | | |

# FIG.100 SLIDE SYSTEM

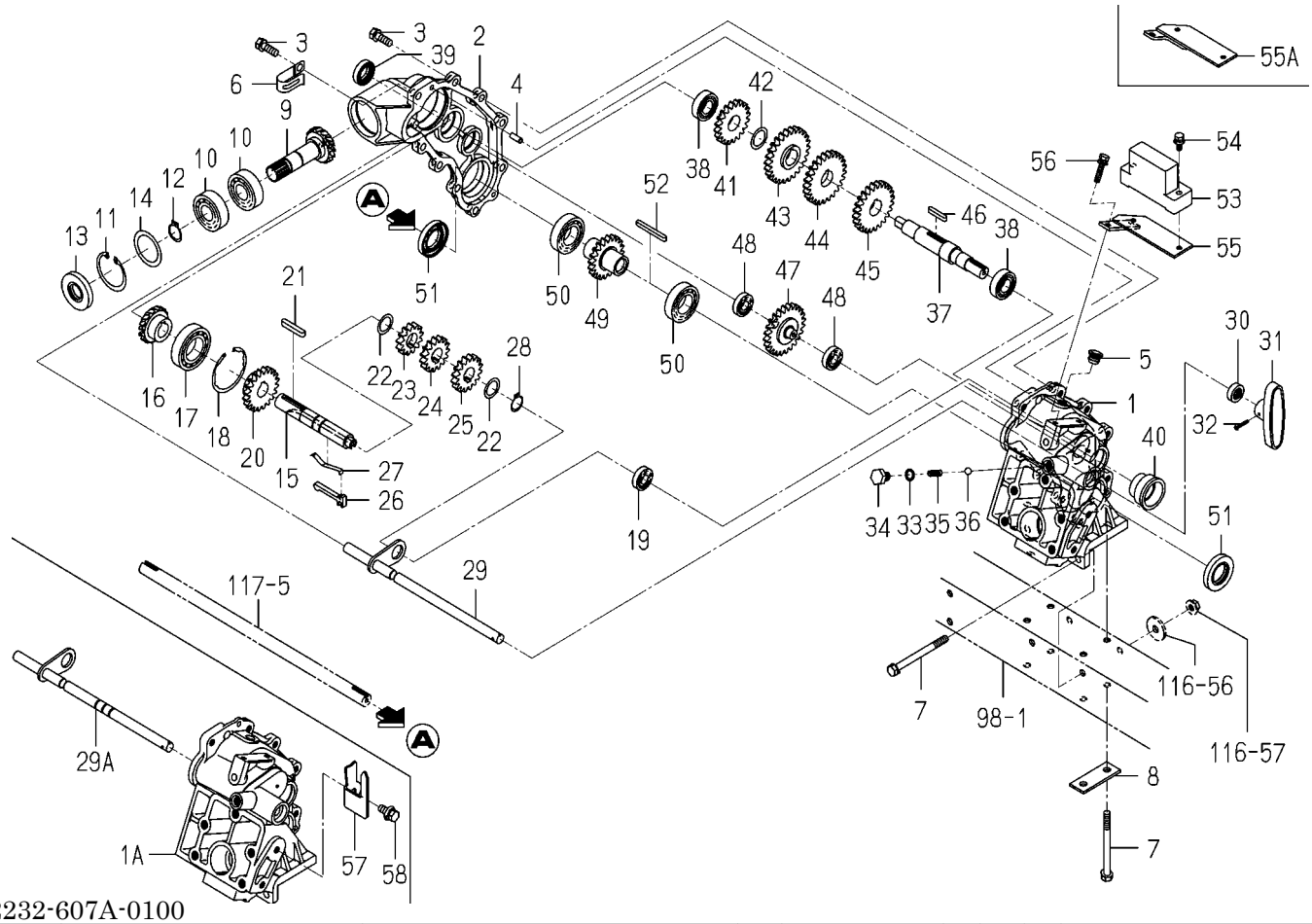


2232-607A-0100

| KEY | PART CODE | DESCRIPTION | SPC | TYPE OF MODEL NP80D E16 | | ITC | COL | GRP | REMARKS |
|---|---|---|---|---|---|---|---|---|---|
| 58 | V211-360-802-00 | BOLT,SP/M8X20 | * | 1 81- | | | | | |

# FIG.101 CAM(LEAD)SYSTEM

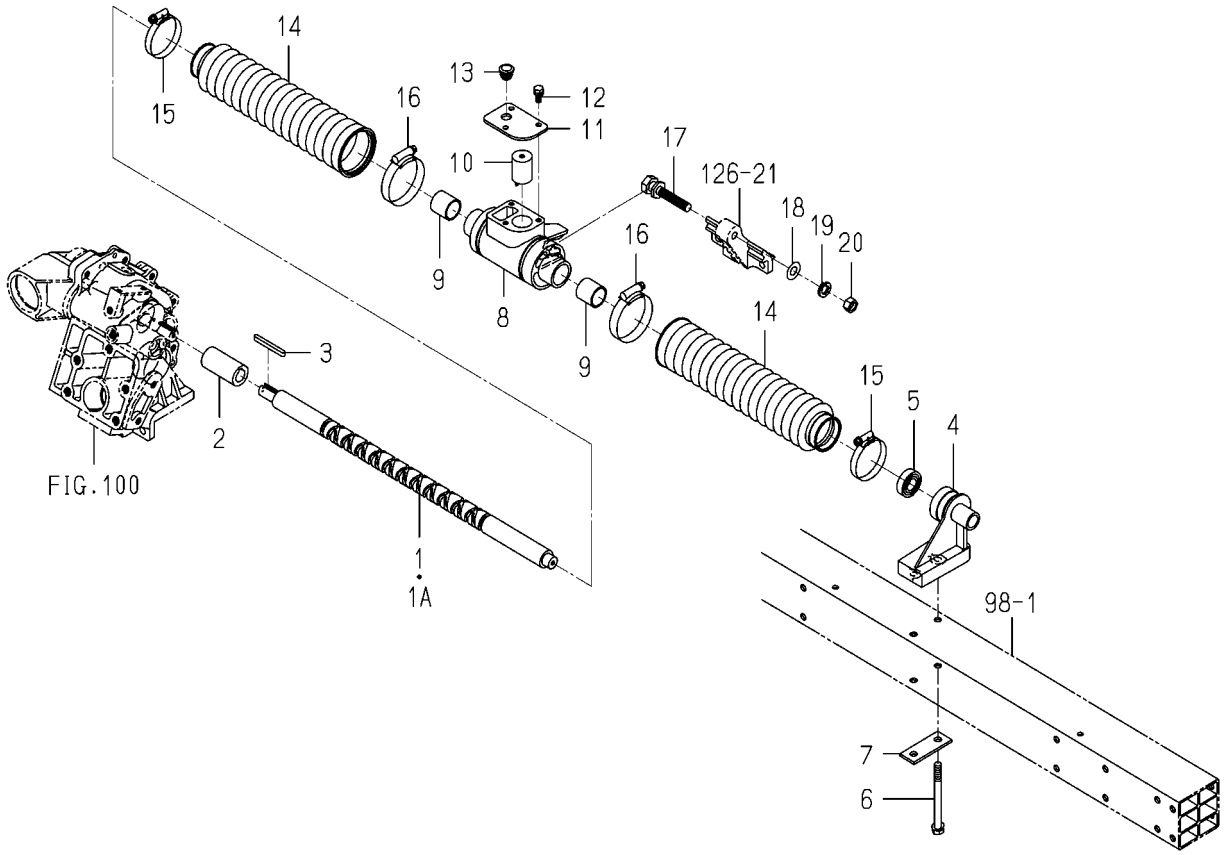


2233-608 -0100

| KEY | PART CODE | DESCRIPTION | SPC | TYPE OF MODEL NP80D E16 | | ITC | COL | GRP | REMARKS |
|---|---|---|---|---|---|---|---|---|---|
| 1 | 2233-608-001-00 | CAM/LEAD/NP8 | * | 1 -80 | | | | | |
| 1A | 2232-608-006-00 | CAM/LEAD | * | 1 81- | | | | | |
| 2 | 2232-608-018-00 | COUPLING/DRAIVE | * | 1 | | | | | |
| 3 | 2232-702-003-00 | KEY/05X05X50 | * | 1 | | | | | |
| 4 | 2232-608-005-20 | HOLDER/LEADCAM | * | 1 | | | | | |
| 5 | V600-150-600-20 | BEARING,RB/6002SS | * | 1 | | | | | |
| 6 | 2232-603-003-10 | BOLT/M8X90 | * | 2 | | | | | |
| 7 | 2232-603-002-10 | PLATE/I/24X64 | * | 1 | | | | | |
| 8 | 2232-608-001-00 | METAL/CAM/LEAD | * | 1 | | | | | |
| 9 | 2232-608-007-00 | BUSH/22X26X25 | * | 2 | | | | | |
| 10 | 2232-608-014-00 | CATCH/LEAD | * | 1 | | | | | |
| 11 | 2232-608-010-10 | PLATE/LID | * | 1 | | | | | |
| 12 | 2232-608-021-00 | BOLT/S/M6X16/G | * | 3 | | | | | |
| 13 | 2142-736-236-00 | PLUG | * | 1 | | | | | |
| 14 | 2232-608-008-00 | BOOT/CAM/LEAD | * | 2 | | | | | |
| 15 | J061-132-050-00 | CLAMP/WORM/32-50 | * | 2 | | | | | |
| 16 | J061-145-060-10 | CLAMP/WORM/45-60 | * | 2 | | | | | |
| 17 | 2232-608-009-00 | BOLT/JOINT | * | 1 | | | | | |
| 18 | V410-260-010-00 | WASHER,PL/M10 | * | 1 | | | | | |
| 19 | V401-160-010-00 | WASHER,SP/M10 | * | 1 | | | | | |
| 20 | V304-260-010-00 | NUT/M10 | * | 1 | | | | | |

# FIG.102 CAM(FEED/SEEDLING)SYSTEM

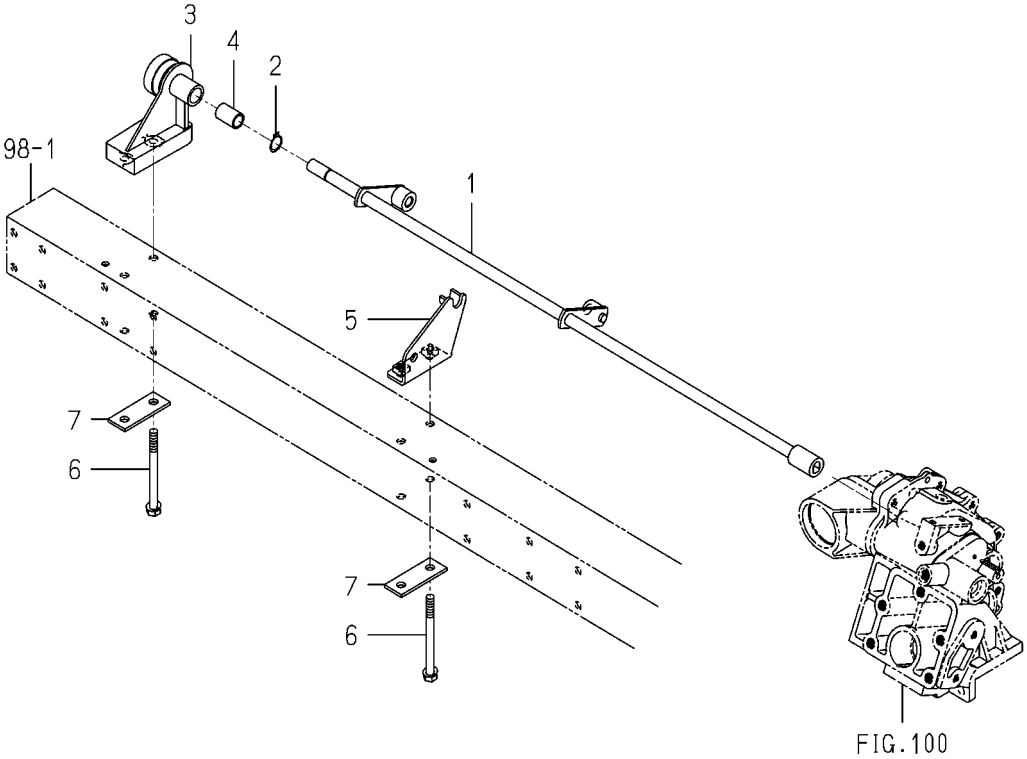


2233-612 -0100

| KEY | PART CODE | DESCRIPTION | SPC | TYPE OF MODEL NP80D | E16 | ITC | COL | GRP | REMARKS |
|---|---|---|---|---|---|---|---|---|---|
| 1 | 2233-612-200-10 | CAM/SEND/8 COMP | * | 1 | | | | | |
| 2 | 2145-774-003-00 | SNAPRING | * | 1 | | | | | |
| 3 | 2232-608-005-20 | HOLDER/LEADCAM | * | 1 | | | | | |
| 4 | 2161-612-002-10 | BUSH/12X16X24 | * | 1 | | | | | |
| 5 | 2232-612-220-10 | STAY/CAM/SEND COMP | * | 1 | | | | | |
| 6 | 2232-603-003-10 | BOLT/M8X90 | * | 4 | | | | | |
| 7 | 2232-603-002-10 | PLATE/I/24X64 | * | 2 | | | | | |

# FIG.103 LEVER(DEPTH/PLANTING)SYSTEM

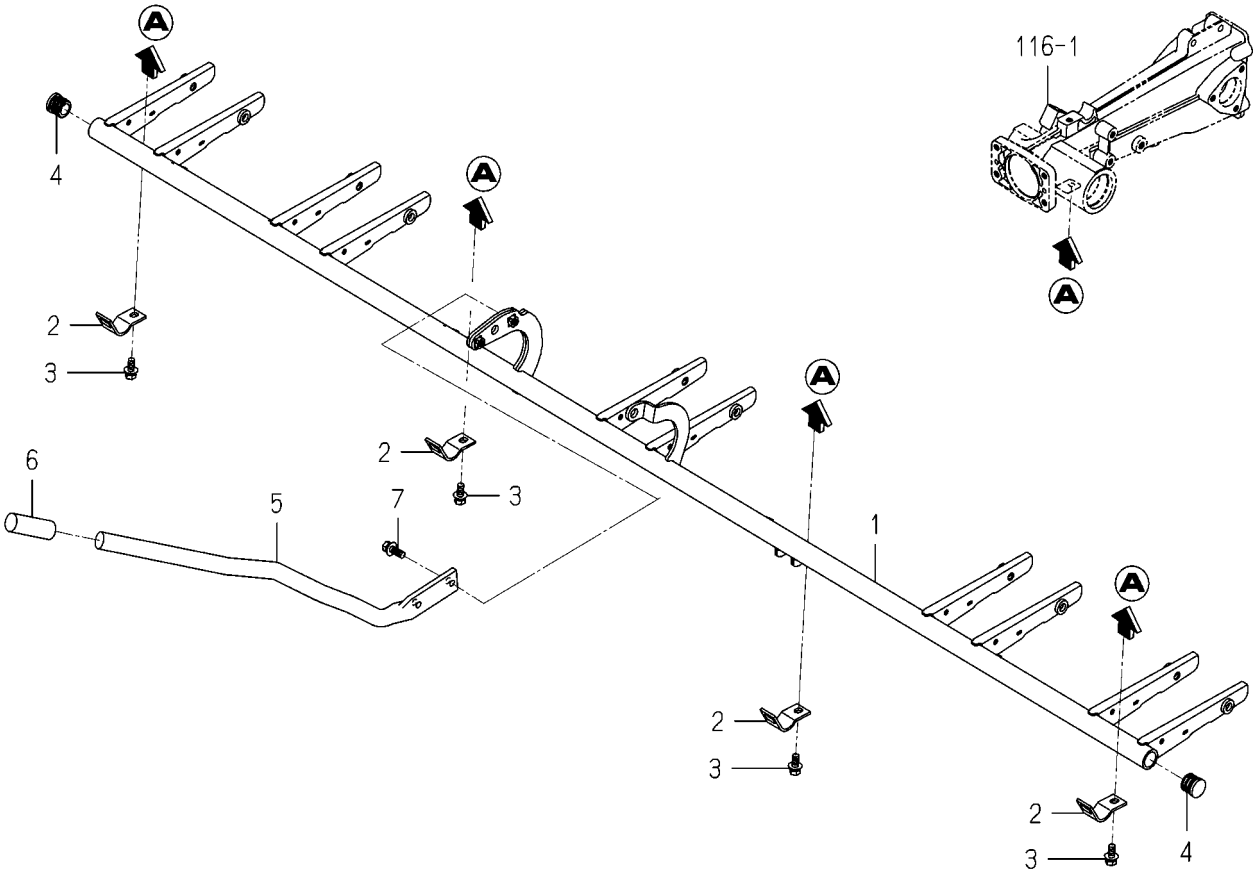


2233-614 -0100

| KEY | PART CODE | DESCRIPTION | SPC | TYPE OF MODEL NP80D E16 | | ITC | COL | GRP | REMARKS |
|---|---|---|---|---|---|---|---|---|---|
| 1 | 2233-614-200-00 | FRAME/DEPTH/8 COMP | * | 1 | | | | | |
| 2 | 2232-614-001-00 | PLATE/HOLDER/DEPTH | * | 4 | | | | | |
| 3 | V211-360-802-00 | BOLT,SP/M8X20 | * | 4 | | | | | |
| 4 | 2232-614-003-00 | CAP/24X18 | * | 2 | | | | | |
| 5 | 2233-614-210-10 | LEVER/DEPTH/8 COMP | * | 1 | | | | | |
| 6 | 2183-613-003-00 | GRIP | * | 1 | | | | | |
| 7 | V211-360-802-50 | BOLT,SP/M8X25 | * | 2 | | | | | |

# FIG.104 FLOAT(CENTER)SYSTEM

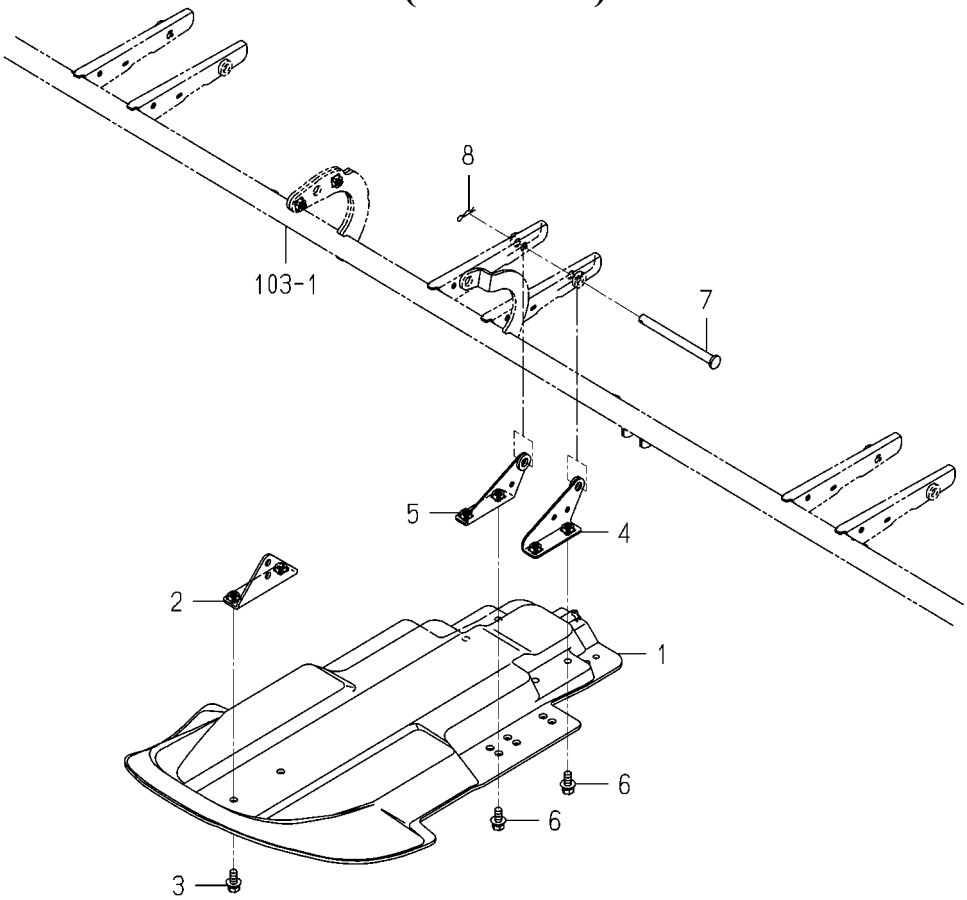


2233-616 -0100

| KEY | PART CODE | DESCRIPTION | SPC | TYPE OF MODEL NP80D E16 | | ITC | COL | GRP | REMARKS |
|---|---|---|---|---|---|---|---|---|---|
| 1 | 2232-616-001-00 | FLOAT/CENTER/6 | * | 1 | | | | | |
| 2 | 2232-616-220-20 | PLATE/CENTER/FLOAT | * | 1 | | | | | |
| 3 | V211-360-802-00 | BOLT,SP/M8X20 | * | 2 | | | | | |
| 4 | 2232-616-200-10 | STAY/CENTERFLOA COMP | * | 1 | | | | | |
| 5 | 2232-616-230-10 | STAY/CENTERFLOA COMP | * | 1 | | | | | |
| 6 | V211-360-802-00 | BOLT,SP/M8X20 | * | 4 | | | | | |
| 7 | 2233-710-002-00 | PIN/10X122 | * | 1 | | | | | |
| 8 | 3505-704-003-00 | PIN,HAIR (10) | * | 1 | | | | | |

# FIG.105 ADJUSTMENT(ROLLING)SYSTEM

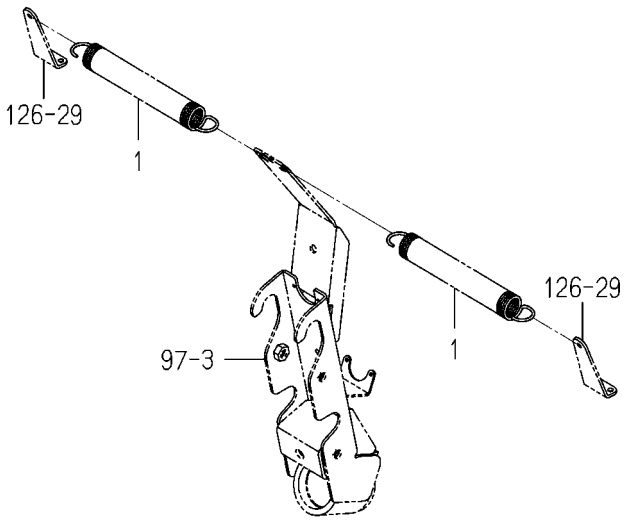


2233-617 -0100

| KEY | PART CODE | DESCRIPTION | SPC | TYPE OF MODEL NP80D | E16 | ITC | COL | GRP | REMARKS |
|---|---|---|---|---|---|---|---|---|---|
| 1 | 2146-640-001-60 | SPRING/HE232 | * | 2 | | | | | |

# FIG.106 AUTOMATIC CONTROL(ROLLING)SYSTEM

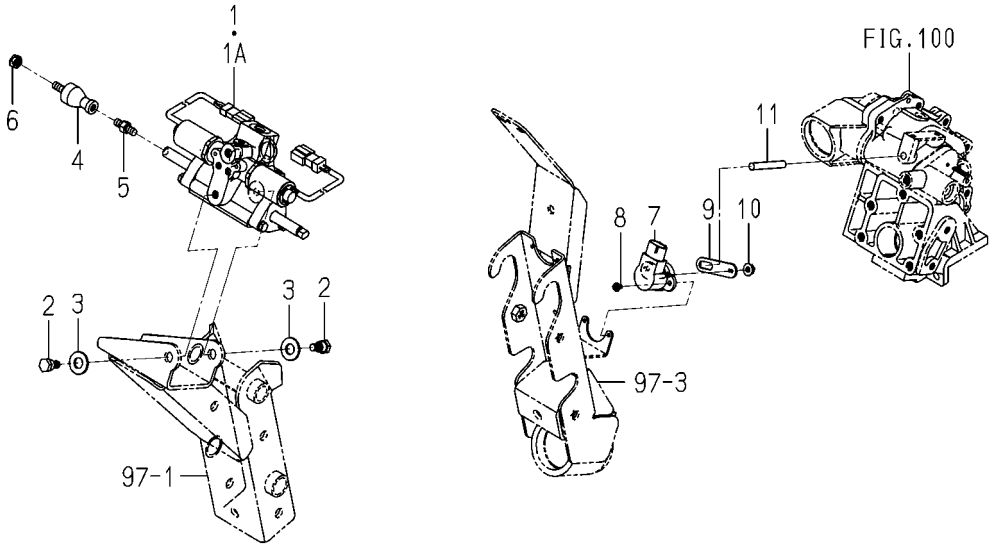


2233-618 -0100

| KEY | PART CODE | DESCRIPTION | SPC | TYPE OF MODEL NP80D E16 | | ITC | COL | GRP | REMARKS |
|---|---|---|---|---|---|---|---|---|---|
| 1 | K116-029-000-50 | UNIT/VALVE/CYLINDER/ | * | 1 -80 | | | | | FIG 152 |
| 1A | K116-029-000-60 | UNIT/VALVE/CYLINDER/ | * | 1 81- | | 1 | | | FIG 152 |
| 2 | 2186-436-007-00 | BOLT | * | 2 | | | | | |
| 3 | V411-260-012-00 | WASHER,PL/M12 | * | 2 | | | | | |
| 4 | 2190-436-001-00 | JOINT | * | 1 | | | | | |
| 5 | 2186-436-008-00 | ROD | * | 1 | | | | | |
| 6 | 2144-117-002-00 | NUT/M8 | * | 1 | | | | | |
| 7 | 1729-662-340-00 | SENSOR/ANGLE/110/R | * | 1 | | | | | |
| 8 | V120-364-001-00 | SCREW,SP/M4X10 | * | 2 | | | | | |
| 9 | 2233-618-002-00 | ARM/SENSOR/ROLLING | * | 1 | | | | | |
| 10 | V360-260-006-00 | NUT/WASHER/M6 | * | 2 | | | | | |
| 11 | 2233-618-001-00 | PIN/08X59 | * | 1 | | | | | |

# FIG.107 RAKE SYSTEM

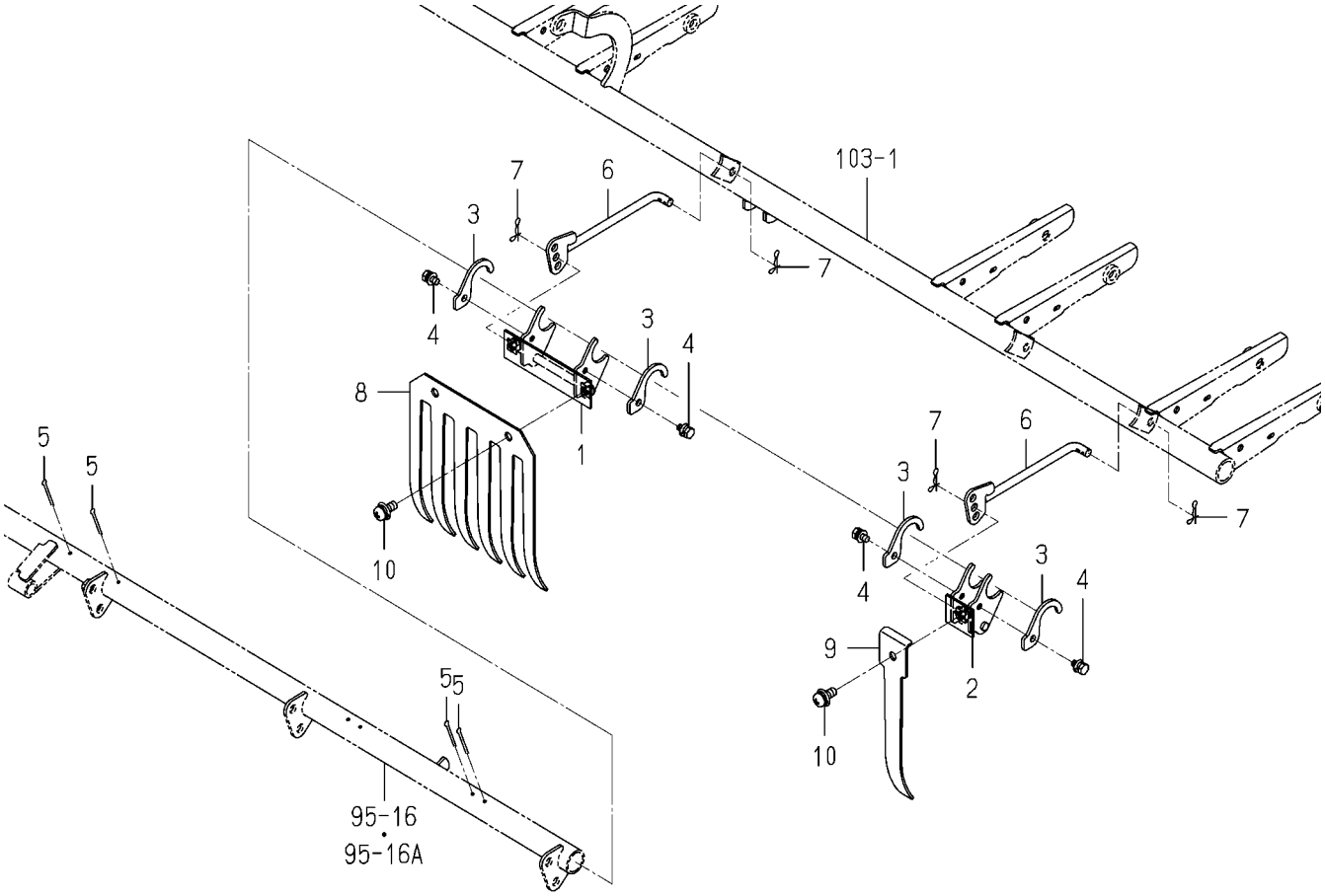


2233-619 -0100

| KEY | PART CODE | DESCRIPTION | SPC | TYPE OF MODEL NP80D E16 | | ITC | COL | GRP | REMARKS |
|---|---|---|---|---|---|---|---|---|---|
| 1 | 2232-619-240-00 | RAKE/CENTER COMP | * | 2 | | | | | |
| 2 | 2232-619-250-00 | RAKE/SIDE COMP | * | 2 | | | | | |
| 3 | 2232-619-002-00 | PLATE/HOLDER | * | 8 | | | | | |
| 4 | V210-360-601-20 | BOLT,SP/M6X12 | * | 8 | | | | | |
| 5 | 2204-582-015-00 | PIN,SPLIT/3X30/SUS | * | 8 | | | | | |
| 6 | 2232-619-260-10 | ROD/LAKE COMP | * | 4 | | | | | |
| 7 | 2161-735-006-00 | PIN/STOPPER/8 | * | 8 | | | | | |
| 8 | 2232-619-003-20 | RAKE/CENTER | * | 2 | | | | | |
| 9 | 2232-619-004-00 | RAKE/SIDE | * | 2 | | | | | |
| 10 | V120-368-002-00 | SCREW,SP/M8X20 | * | 6 | | | | | |

# FIG.108 DRIVE(FERTILIZER)SYSTEM(F TYPE)(1/2)

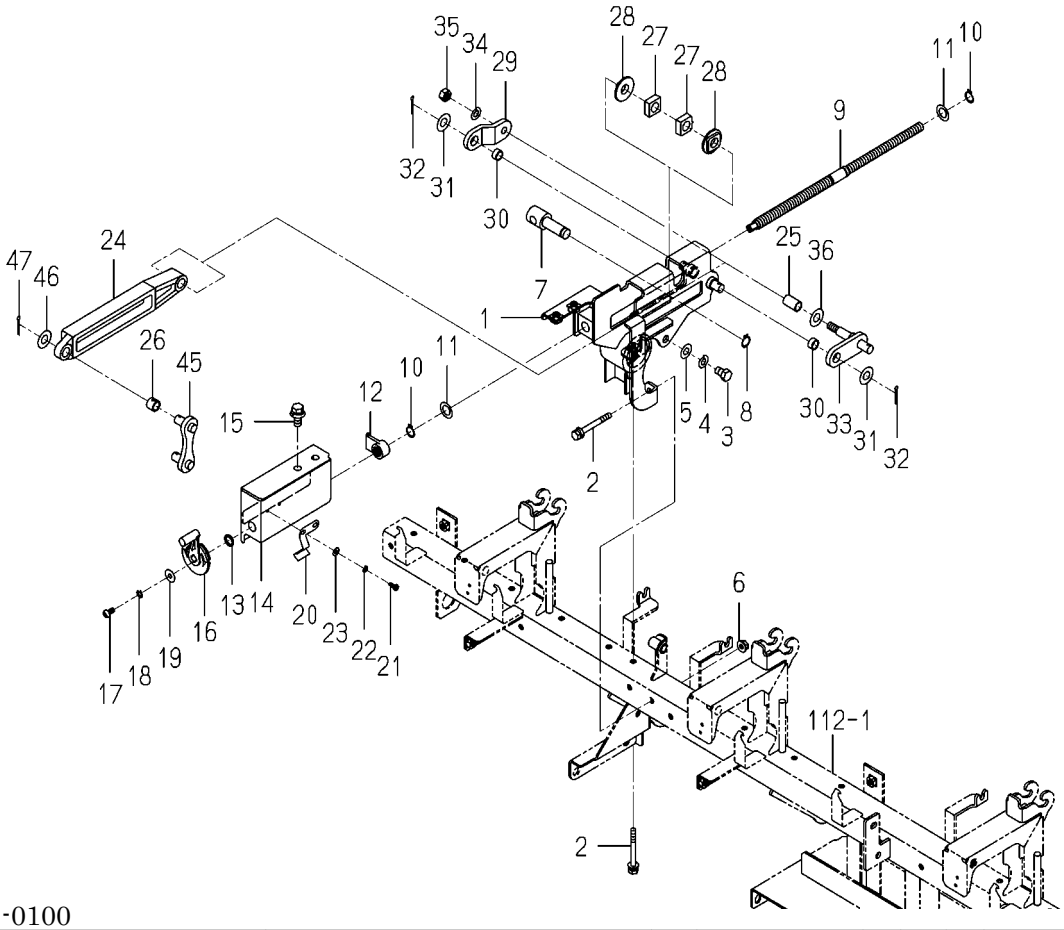


2233-648 -0100

| KEY | PART CODE | DESCRIPTION | SPC | TYPE OF MODEL NP80D E16 | | ITC | COL | GRP | REMARKS |
|---|---|---|---|---|---|---|---|---|---|
| 1 | 2233-648-320-00 | PLATE/ADJUST/D COMP | * | 1 | | | | | |
| 2 | 2232-645-022-00 | BOLT/SPM6X55/G | * | 3 | | | | | |
| 3 | V201-700-801-20 | BOLT,SUS/M8X12 | * | 1 | | | | | |
| 4 | V401-700-008-00 | WASHER,SP/M8 | * | 1 | | | | | |
| 5 | V411-700-008-00 | WASHER,PL/M8 | * | 1 | | | | | |
| 6 | 2204-803-068-00 | NUT/WASER/M6/SUS | * | 2 | | | | | |
| 7 | 2232-645-015-10 | PIVOT/DIAL | * | 1 | | | | | |
| 8 | 2145-774-003-00 | SNAPRING | * | 1 | | | | | |
| 9 | 2232-645-011-10 | ROD/DIALADJUST | * | 1 | | | | | |
| 10 | 2145-774-003-00 | SNAPRING | * | 2 | | | | | |
| 11 | 8836-703-055-00 | WASHER/M12X20X01 | * | 2 | | | | | |
| 12 | 2232-645-013-00 | NUT/ADJUST | * | 1 | | | | | |
| 13 | V720-101-901-00 | O-RING/1A,P10 | * | 1 | | | | | |
| 14 | 2232-645-018-00 | GUIDE/ADJUSUT | * | 81-1 | | | | | |
| 15 | 2232-645-023-00 | BOLT/SP/M8X20/G | * | 2 | | | | | |
| 16 | 2232-645-007-10 | HANDLE/ADJUST | * | 1 | | | | | |
| 17 | V111-705-001-00 | SCREW/M5X10 | * | 1 | | | | | |
| 18 | V401-700-005-00 | WASHER,SP/M5 | * | 1 | | | | | |
| 19 | 8843-404-009-00 | WASHER/05X16X01 | * | 1 | | | | | |
| 20 | 8843-404-006-00 | SPRING | * | 1 -150 | | | | | |
| 20A | 8843-404-006-10 | SPRING | * | 1 151- | | 1 | | | |
| 21 | 8844-405-028-00 | SCREW/04 | * | 2 | | | | | |
| 22 | V401-700-004-00 | WASHER,SP/M4 | * | 2 | | | | | |
| 23 | V411-700-004-00 | WASHER,PL/M4 | * | 2 | | | | | |
| 24 | 2233-648-012-00 | ARM/ADJUST/D | * | 1 | | | | | |
| 25 | 3924-312-003-00 | BUSH/10X12X20 | * | 1 | | | | | |
| 26 | 2233-648-001-00 | BUSH/10X13X10 | * | 1 | | | | | |
| 27 | 2232-645-014-20 | HUB/12X08 | * | 2 | | | | | |
| 28 | 2232-645-017-00 | HUB/12X05 | * | 2 | | | | | |
| 29 | 2232-645-016-00 | PLATE/Z/24X40 | * | 1 | | | | | |

# FIG.108 DRIVE(FERTILIZER)SYSTEM(F TYPE)(2/2)

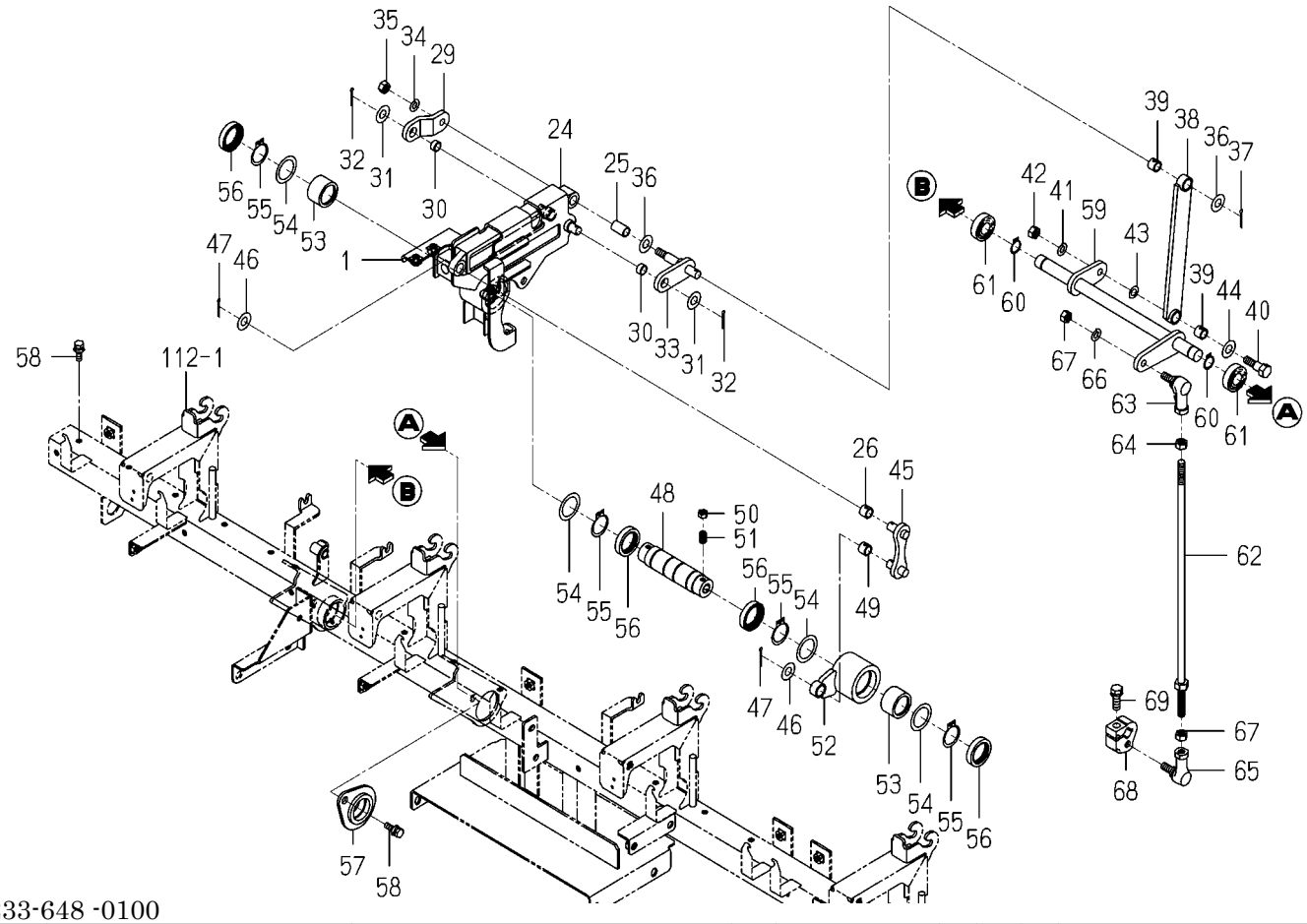


2233-648 -0100

| KEY | PART CODE | DESCRIPTION | SPC | TYPE OF MODEL NP80D E16 | | ITC | COL | GRP | REMARKS |
|---|---|---|---|---|---|---|---|---|---|
| 30 | 2232-645-025-00 | BUSH/10X12X06 | * | 2 | | | | | |
| 31 | V411-700-010-00 | WASHER,PL/M10 | * | 2 | | | | | |
| 32 | 2188-208-015-00 | PIN,COTTER/2.5X20/SU | * | 2 | | | | | |
| 33 | 2232-645-420-00 | SHAFT/COUNTER COMP | * | 1 | | | | | |
| 34 | V401-700-008-00 | WASHER,SP/M8 | * | 1 | | | | | |
| 35 | V304-700-008-00 | NUT,SUS/M8 | * | 1 | | | | | |
| 36 | V411-700-010-00 | WASHER,PL/M10 | * | 2 | | | | | |
| 37 | 2188-208-015-00 | PIN,COTTER/2.5X20/SU | * | 1 | | | | | |
| 38 | 2233-648-330-00 | ARM/DRIVE/D COMP | * | 1 | | | | | |
| 39 | 2233-648-001-00 | BUSH/10X13X10 | * | 2 | | | | | |
| 40 | 2233-648-006-10 | PIN/10X36 | * | 1 | | | | | |
| 41 | V401-700-008-00 | WASHER,SP/M8 | * | 1 | | | | | |
| 42 | V304-700-008-00 | NUT,SUS/M8 | * | 1 | | | | | |
| 43 | 2183-880-018-00 | SIM/8X16X0.3 | * | 1 | | | | | |
| 44 | V411-700-010-00 | WASHER,PL/M10 | * | 1 | | | | | |
| 45 | 2233-648-350-00 | ARM/COUNTER/50/ COMP | * | 1 | | | | | |
| 46 | V411-700-010-00 | WASHER,PL/M10 | * | 2 | | | | | |
| 47 | 2188-208-015-00 | PIN,COTTER/2.5X20/SU | * | 2 | | | | | |
| 48 | 8843-704-004-00 | HUB/ROLLER CLUTCH | * | 1 | | | | | |
| 49 | 2233-648-001-00 | BUSH/10X13X10 | * | 1 | | | | | |
| 50 | V301-700-006-00 | NUT,SUS/M6 | * | 2 | | | | | |
| 51 | V180-446-001-20 | SCREW,SET/M6X12 | * | 2 | | | | | |
| 52 | 2233-678-220-00 | HUB/ROLLER CLUTCH/NP | * | 1 | | | | | |
| 53 | 8843-704-251-00 | CLUTCH,ROLLER/FC-25 | * | 2 | | | | | |
| 54 | 8843-704-005-00 | WASHER/25X35X01 | * | 4 | | | | | |
| 55 | V704-140-025-00 | RING,SNAP/25 C | * | 4 | | | | | |
| 56 | V744-125-350-70 | SEAL,OIL/TC25357 | * | 4 | | | | | |
| 57 | 2233-648-220-00 | PLATE/FULCRUM/DRIVE/ | * | 1 | | | | | |
| 58 | 2232-645-021-00 | BOLT/SP/M6X20/G | * | 5 | | | | | |
| 59 | 2233-648-210-00 | ARM/DRIBVE/8Z COMP | * | 1 | | | | | |

# FIG.108 DRIVE(FERTILIZER)SYSTEM(F TYPE)(2/2)

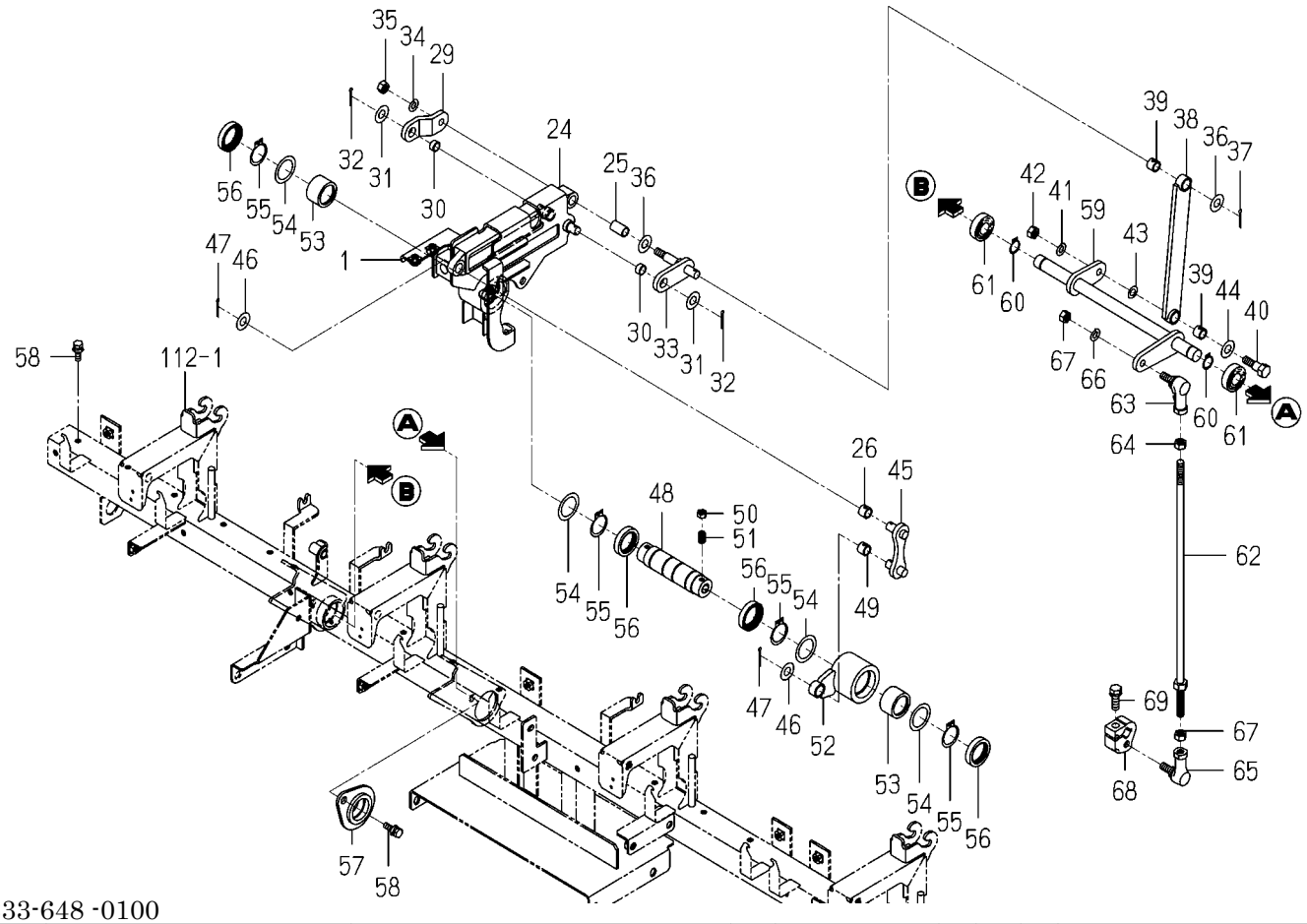


2233-648 -0100

| KEY | PART CODE | DESCRIPTION | SPC | TYPE OF MODEL NP80D | TYPE OF MODEL E16 | ITC | COL | GRP | REMARKS |
|---|---|---|---|---|---|---|---|---|---|
| 60 | 2145-770-014-00 | RING, SNAP | * | 2 | | | | | |
| 61 | V600-150-600-20 | BEARING,RB/6002SS | * | 2 | | | | | |
| 62 | 2232-645-310-00 | ROD/DRIVE/NP COMP | * | 1 | | | | | |
| 63 | 1560-695-022-00 | JOINT BALL M08LH | * | 1 | | | | | |
| 64 | 1560-132-007-30 | NUT/LH/M08 | * | 1 | | | | | |
| 65 | 1560-695-021-00 | JOINT BALL M08RH | * | 1 | | | | | |
| 66 | V401-160-008-00 | WASHER,SP/M8 | * | 1 | | | | | |
| 67 | V304-260-008-00 | NUT/M8 | * | 2 | | | | | |
| 68 | 2232-645-019-10 | ARM/FERTILIZEDRIVE | * | 1 | | | | | |
| 69 | V211-560-802-50 | BOLT,S/M8X25/7T | * | 1 | | | | | |

# FIG.109 HARNESS,SENSOR& SWITCH(FERTILIZER)SYSTEM(F TYPE)

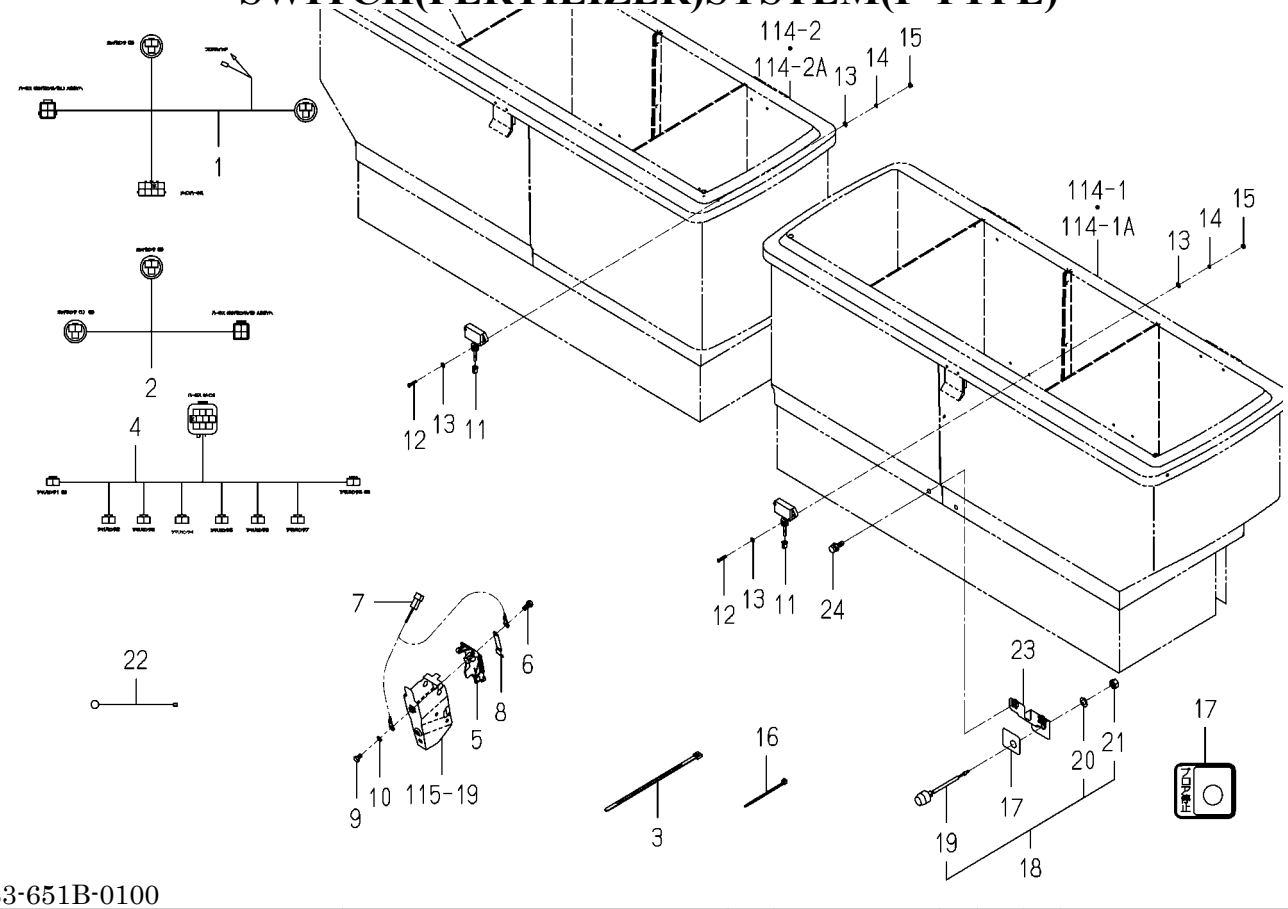


2233-651B-0100

| KEY | PART CODE | DESCRIPTION | SPC | TYPE OF MODEL NP80D | E16 | ITC | COL | GRP | REMARKS |
|---|---|---|---|---|---|---|---|---|---|
| 1 | 2233-651-210-10 | HARNESS/HOPPER SENS0 | * | 1 | | | | | |
| 2 | 2233-651-220-00 | HARNESS/HOPPER SENNS | * | 1 | | | | | |
| 3 | 1376-402-003-00 | BAND,WIRE/140 | * | 2 | | | | | |
| 4 | 2233-651-230-00 | HARNESS/BLOCK SENS0R | * | 1 | | | | | |
| 5 | 2232-651-002-00 | COVER/DICTHER/NP | * | 8 | | | | | |
| 6 | 8836-601-011-00 | SCREW,TAPPING | * | 8 | | | | | |
| 7 | 8844-535-002-00 | HARNESS/SENCER/PZ | * | 8 | | | | | |
| 8 | 2232-651-003-00 | SENSOR/CLOGGED/NP | * | 8 | | | | | |
| 9 | 2513-801-042-00 | BOLT | * | 8 | | | | | |
| 10 | V401-700-005-00 | WASHER,SP/M5 | * | 8 | | | | | |
| 11 | 8842-535-250-10 | SENSOR,HOPPPER | * | 4 | | | | | |
| 12 | V111-703-001-60 | SCREW/M3X16 | * | 8 | | | | | |
| 13 | V411-700-003-00 | WASHER,PL/M3 | * | 16 | | | | | |
| 14 | V401-700-003-00 | WASHER,SP/M3 | * | 8 | | | | | |
| 15 | V301-700-003-00 | NUT,SUS/M3 | * | 8 | | | | | |
| 16 | 2132-545-008-00 | WIRE BAND(92) | * | 2 | | | | | |
| 17 | 2232-651-004-00 | LABEL/SWITCH/E16 | * | 1 | | | | | |
| 18 | 2145-542-230-00 | SWITCH,PUSH | * | 1 | | | | | |
| 19 | 2145-542-232-10 | BOOT | * | 1 | | | | | |
| 20 | V401-160-008-00 | WASHER,SP/M8 | * | 1 | | | | | |
| 21 | V335-260-008-00 | NUT/M8 | * | 1 | | | | | |
| 22 | 8836-502-203-00 | HARNESS/SWGND | * | 1 | | | | | |
| 23 | 2233-688-300-00 | STAY/SWITCH/8 COMP | * | 1 | | | | | |
| 24 | 2232-645-021-00 | BOLT/SP/M6X20/G | * | 2 | | | | | |

# FIG.110 SENSOR(SEND OUT/FERTILIZER)SYSTEM (F TYPE)

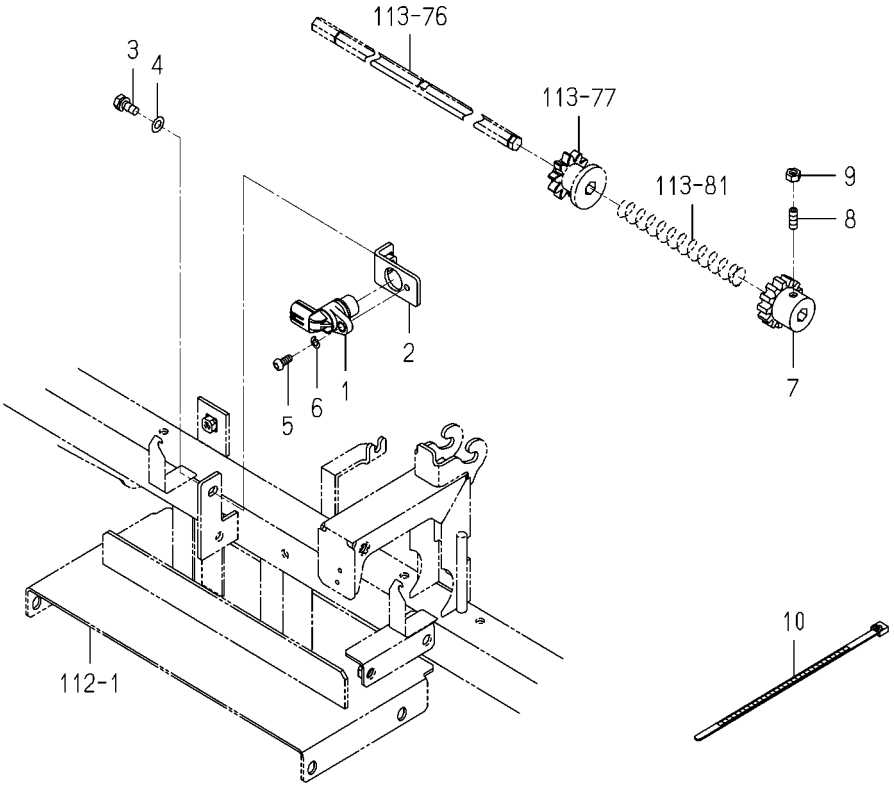


2233-652 -0100

| KEY | PART CODE | DESCRIPTION | SPC | TYPE OF MODEL NP80D E16 | | ITC | COL | GRP | REMARKS |
|---|---|---|---|---|---|---|---|---|---|
| 1 | 3888-281-200-00 | SENSOR/SPEED/GEAR | * | 1 | | | | | |
| 2 | 2233-652-200-00 | STAY/SENSOR COMP | * | 1 | | | | | |
| 3 | 2204-738-059-00 | BOLT/M6X16 | * | 1 | | | | | |
| 4 | V411-700-006-00 | WASHER,PL/M6 | * | 1 | | | | | |
| 5 | V111-705-001-20 | SCREW/M5X12 | * | 1 | | | | | |
| 6 | V401-700-005-00 | WASHER,SP/M5 | * | 1 | | | | | |
| 7 | 2233-651-300-00 | GEAR/SENSOR COMP | * | 1 | | | | | |
| 8 | 2186-421-033-00 | BOLT M6 | * | 1 | | | | | |
| 9 | V301-700-006-00 | NUT,SUS/M6 | * | 1 | | | | | |
| 10 | 1376-402-003-00 | BAND,WIRE/140 | * | 1 | | | | | |

# FIG.111 AIR CHAMBER(FERTILIZER)SYSTEM(F TYPE)

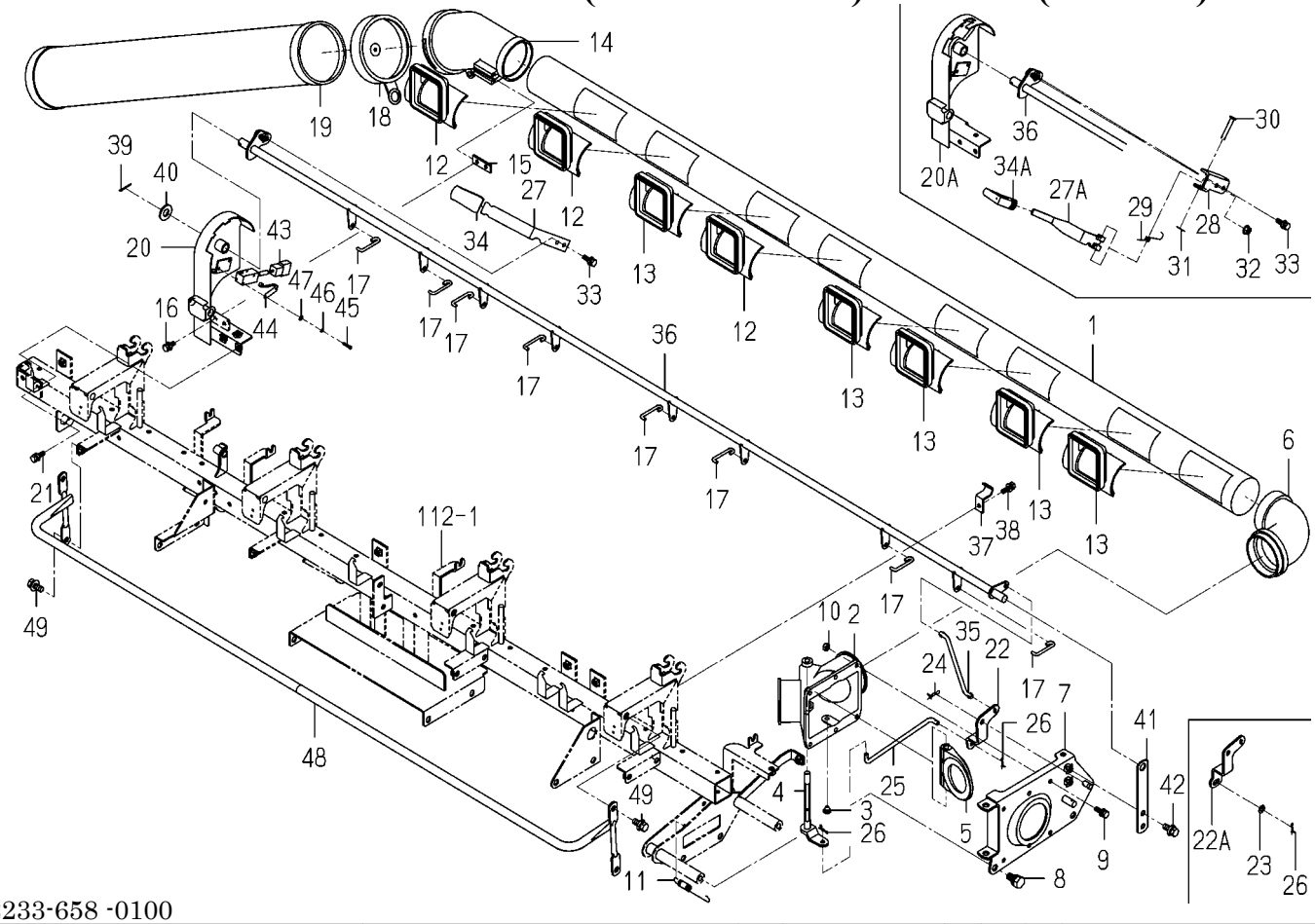


2233-658 -0100

| KEY | PART CODE | DESCRIPTION | SPC | TYPE OF MODEL NP80D E16 | | ITC | COL | GRP | REMARKS |
|---|---|---|---|---|---|---|---|---|---|
| 1 | 2233-658-005-00 | TUBE/DISCHARGE/8 | * | 1 | | | | | |
| 2 | 2232-655-002-00 | CASE/SUTTER | * | 1 | | | | | |
| 3 | 8842-505-007-00 | CAP,SHUTTER | * | 1 | | | | | |
| 4 | 2232-655-008-00 | SUTTERCHANGE | * | 1 | | | | | |
| 5 | 2232-655-001-00 | SUTTER | * | 1 | | | | | |
| 6 | 2232-655-003-00 | JOINT/DISCHARGE | * | 1 | | | | | |
| 7 | 2232-665-500-10 | STAY/AIRCHAMBER COMP | * | 1 | | | | | |
| 8 | 8842-505-035-00 | BOLT/M10X20 | * | 2 | | | | | |
| 9 | 2232-645-021-00 | BOLT/SP/M6X20/G | * | 6 | | | | | |
| 10 | 8842-505-032-00 | NUT/M6 | * | 6 | | | | | |
| 11 | 8842-505-019-00 | SPRING/HE079 | * | 1 | | | | | |
| 12 | 2232-655-015-00 | BOOT/DISCHARGE/RH | * | 3 | | | | | |
| 13 | 2232-655-016-00 | BOOT/DISCHARGE/C | * | 5 | | | | | |
| 14 | 2232-655-006-10 | DUCT/DISCHARGE | * | 1 | | | | | |
| 15 | 2232-655-007-00 | PLATE/I/14X40 | * | 1 | | | | | |
| 16 | 8843-534-002-00 | BOLT/M6X16/SP/SUS | * | 2 | | | | | |
| 17 | 2232-656-020-00 | ROD/SHUTTER | * | 8 | | | | | |
| 18 | 8842-515-015-00 | CAP,DUCT/EXHAUST | * | 1 | | | | | |
| 19 | 8843-514-300-00 | REMAINDER/SHOOT COMP | * | 1 | | | | | |
| 20 | 2232-655-260-10 | PANEL/DISCHARGE COMP | * | 1 -180 | | | 6G | | |
| 20A | 2233-658-260-00 | PANEL/DISCHARGE COMP | * | 1 181- | | | | | |
| 21 | 2232-645-021-00 | BOLT/SP/M6X20/G | * | 3 | | | | | |
| 22 | 2232-655-009-00 | ARM/DISCHARGE | * | 1 -180 | | | | | |
| 22A | 2233-658-009-00 | ARM/DISCHARGE/8 | * | 1 181- | | | | | |
| 23 | V411-700-006-00 | WASHER,PL/M6 | * | 1 181- | | | | | |
| 24 | 2161-735-006-00 | PIN/STOPPER/8 | * | 1 | | | | | |
| 25 | 2232-655-010-10 | ROD/DISCHARGE | * | 1 | | | | | |
| 26 | 2161-735-005-00 | PIN | * | 2 | | | | | |
| 27 | 2232-655-012-10 | LEVER/DISCHARGE | * | 1 -180 | | | | | |
| 27A | 2233-658-002-00 | LEVER/DISCHARGE/8 | * | 1 181- | | | | | |

# FIG.111 AIR CHAMBER(FERTILIZER)SYSTEM(F TYPE)

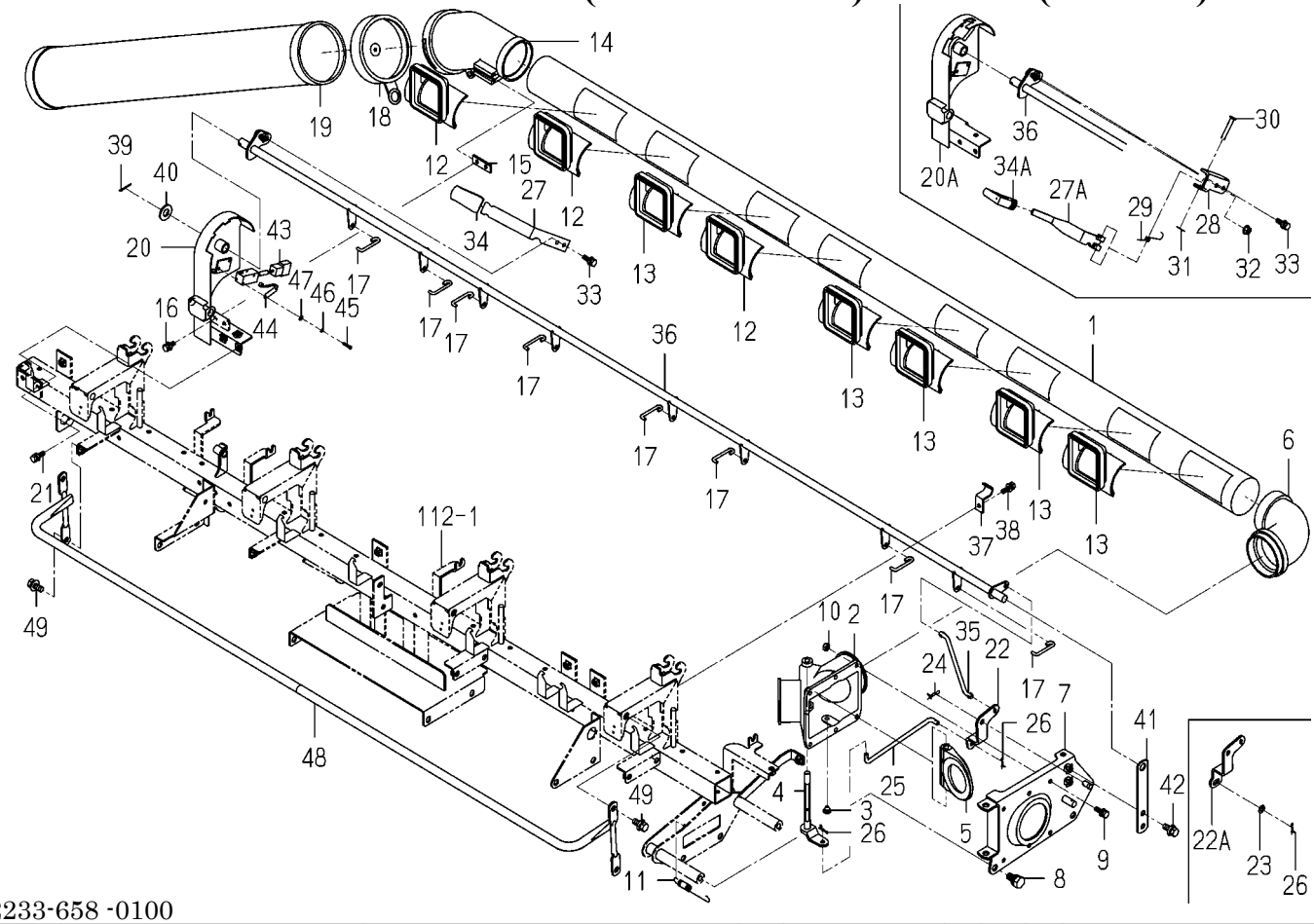


2233-658 -0100

| KEY | PART CODE | DESCRIPTION | SPC | TYPE OF MODEL NP80D E16 | | ITC | COL | GRP | REMARKS |
|---|---|---|---|---|---|---|---|---|---|
| 28 | 2233-658-001-00 | PLATE/U/24X60 | * | 1 181- | | | | | |
| 29 | 2233-658-003-00 | SPRING/HT008 | * | 1 181- | | | | | |
| 30 | 2232-322-001-00 | PIN/06X36 | * | 1 181- | | | | | |
| 31 | 2161-735-005-00 | PIN | * | 1 181- | | | | | |
| 32 | 2204-803-068-00 | NUT/WASER/M6/SUS | * | 1 181- | | | | | |
| 33 | 2232-645-021-00 | BOLT/SP/M6X20/G | * | 1 | | | | | |
| 34 | 2145-751-004-00 | GRIP | * | 1 -180 | | | | | |
| 34A | 2194-117-001-00 | GRIP,AXLE | * | 1 181- | | | | | |
| 35 | 2232-655-011-10 | ROD/COUNTER/DISCHARG | * | 1 | | | | | |
| 36 | 2233-658-400-00 | SHAFT/DISCHARGE/8 | * | 1 | | | | | |
| 37 | 2232-656-022-00 | HOLDDER/DISCHARGE | * | 4 | | | | | |
| 38 | 2232-645-021-00 | BOLT/SP/M6X20/G | * | 2 | | | | | |
| 39 | 2188-208-015-00 | PIN,COTTER/2.5X20/SU | * | 1 | | | | | |
| 40 | V411-700-012-00 | WASHER,PL/M12 | * | 1 | | | | | |
| 41 | 2232-656-021-00 | HOLDDER/DISCHARGE/SI | * | 1 | | | | | |
| 42 | 2232-645-023-00 | BOLT/SP/M8X20/G | * | 2 | | | | | |
| 43 | 3807-836-350-00 | SWITCH ASSY | * | 1 | | | | | |
| 44 | 3807-836-400-00 | ACTUATOR ASSY | * | 1 | | | | | |
| 45 | V111-163-001-60 | SCREW/M3X16 | * | 2 | | | | | |
| 46 | V401-160-003-00 | WASHER,SP/M3 | * | 2 | | | | | |
| 47 | V411-260-003-00 | WASHER,PL/M3 | * | 2 | | | | | |
| 48 | 2233-698-200-00 | STAY/DUCTGUARD COMP | * | 1 | | | | | |
| 49 | 2232-645-023-00 | BOLT/SP/M8X20/G | * | 4 | | | | | |

# FIG.112 FRAME(FERTILIZER)SYSTEM(F TYPE)(1/2)

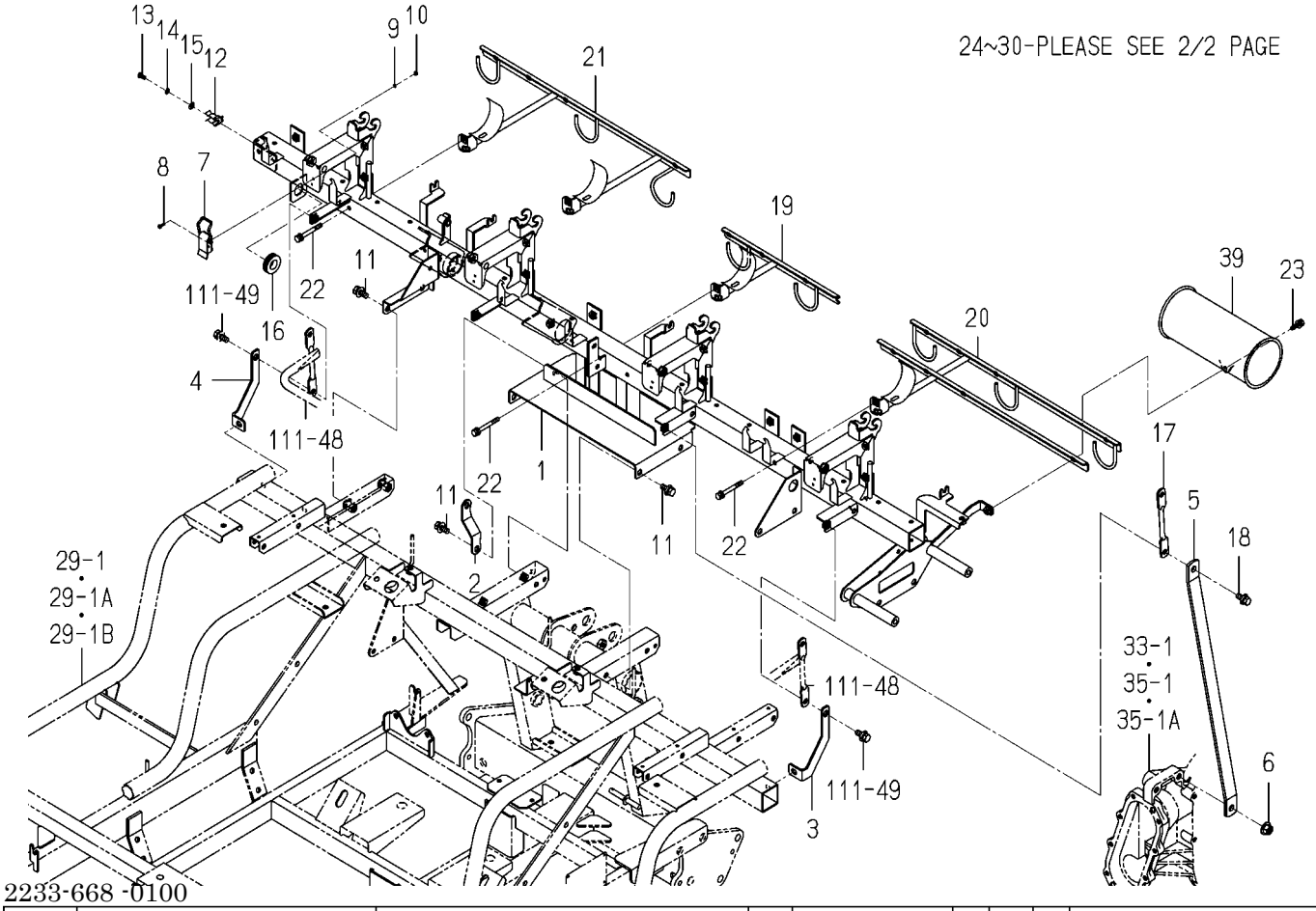


| KEY | PART CODE | DESCRIPTION | SPC | TYPE OF MODEL NP80D | TYPE OF MODEL E16 | ITC | COL | GRP | REMARKS |
|---|---|---|---|---|---|---|---|---|---|
| 1 | 2233-668-250-10 | FRAME/8/NP COMP | * | 1 | | | | | |
| 2 | 2233-668-003-00 | PLATE/Z/18X149 | * | 1 | | | | | |
| 3 | 2233-668-004-00 | PLATE/SUPPORT/Y/LH | * | 1 | | | | | |
| 4 | 2233-668-005-00 | PLATE/SUPPORT/Y/RH | * | 1 | | | | | |
| 5 | 2233-668-008-00 | PLATE/I/25X470 | * | 2 | | | | | |
| 6 | V363-260-010-00 | NUT/WASHER/M10 | * | 2 | | | | | |
| 7 | 8836-508-001-00 | HOOK | * | 4 | | | | | |
| 8 | 8836-506-005-00 | SCREW,TAPPING/M3 | * | 8 | | | | | |
| 9 | V401-700-003-00 | WASHER,SP/M3 | * | 8 | | | | | |
| 10 | V301-700-003-00 | NUT,SUS/M3 | * | 8 | | | | | |
| 11 | V211-360-802-00 | BOLT,SP/M8X20 | * | 8 | | | | | |
| 12 | 2194-508-016-00 | HOOK/BONNET/PQ | * | 1 | | | | | |
| 13 | V111-705-001-00 | SCREW/M5X10 | * | 1 | | | | | |
| 14 | V401-700-005-00 | WASHER,SP/M5 | * | 1 | | | | | |
| 15 | V411-700-005-00 | WASHER,PL/M5 | * | 1 | | | | | |
| 16 | 1575-616-005-00 | GROMMET/17X21X3 | * | 1 | | | | | |
| 17 | 2232-665-002-10 | ROD/121 | * | 2 | | | | | |
| 18 | 2232-645-023-00 | BOLT/SP/M8X20/G | * | 4 | | | | | |
| 19 | 2232-692-220-20 | STAY/DUCT/REAR COMP | * | 1 | | | | | |
| 20 | 2233-692-220-00 | STAY/DUCT/REAR/8LH | * | 1 | | | | | |
| 21 | 2233-692-230-00 | STAY/DUCT/REAR/8RH | * | 1 | | | | | |
| 22 | 2232-645-022-00 | BOLT/SPM6X55/G | * | 4 | | | | | |
| 23 | 2232-645-021-00 | BOLT/SP/M6X20/G | * | 1 | | | | | |
| 24 | 8844-629-300-20 | BLOWER/FZ/B ASSY | * | 1 | | | | | |
| 25 | 8844-629-310-10 | MOTORBRUSH/FZ ASSY | * | 1 | | | | | |
| 26 | 8844-629-307-00 | MOTORCAP/LARGE | * | 1 | | | | | |
| 27 | 8842-625-409-00 | BOLT/M6X2 | * | 6 | | | | | |
| 28 | 8842-625-408-00 | SCREW/M3X | * | 9 | | | | | |
| 29 | V301-700-003-00 | NUT,SUS/M3 | * | 9 | | | | | |
| 30 | 8844-629-304-10 | CASING/IN/FZ | * | 1 | | | | | |

# FIG.112 FRAME(FERTILIZER)SYSTEM(F TYPE)(2/2)

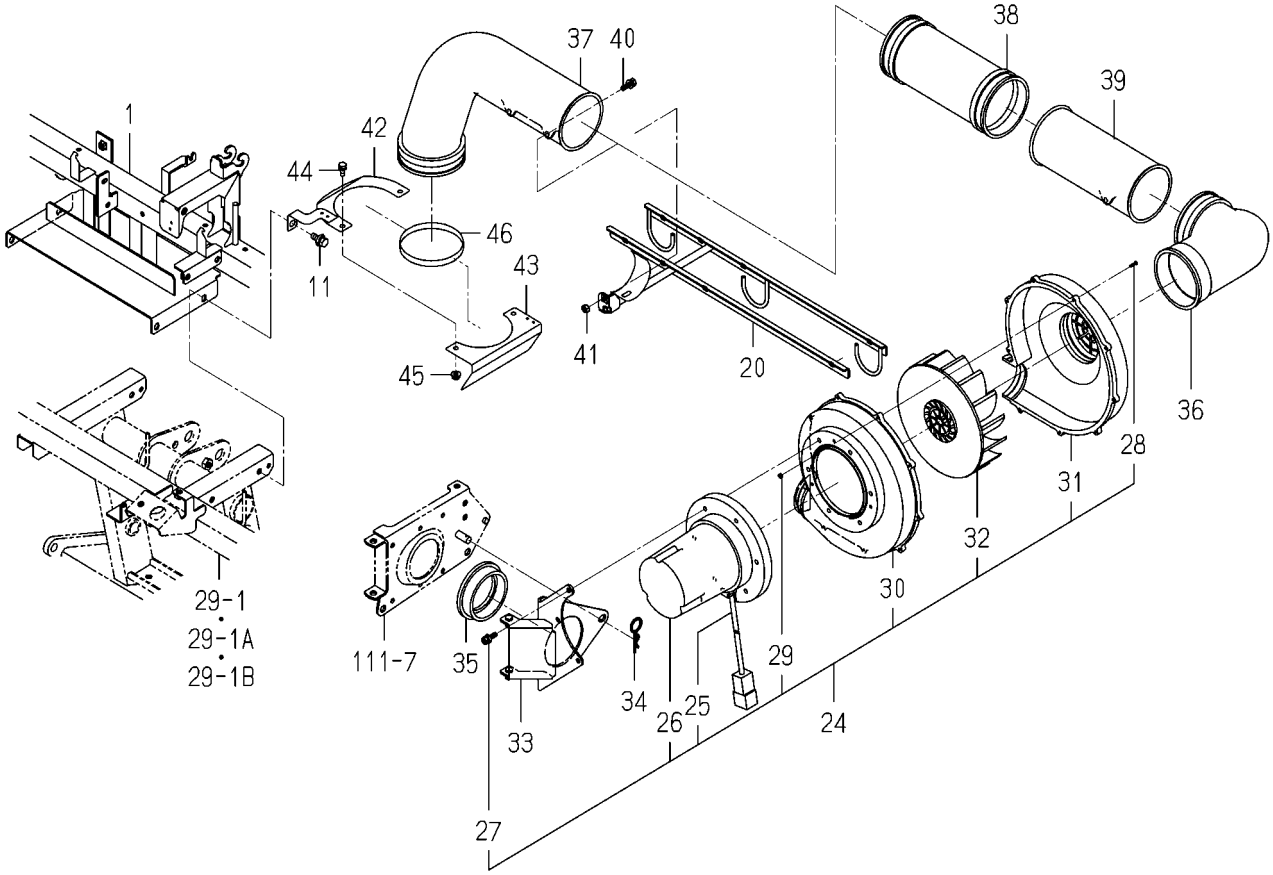


2233-668 -0100

| KEY | PART CODE | DESCRIPTION | SPC | TYPE OF MODEL NP80D | TYPE OF MODEL E16 | ITC | COL | GRP | REMARKS |
|---|---|---|---|---|---|---|---|---|---|
| 31 | 8844-629-305-00 | CASING/OUT/FZ | * | 1 | | | | | |
| 32 | 8844-629-306-00 | FAN | * | 1 | | | | | |
| 33 | 2232-665-510-10 | STAY/BLOWER COMP | * | 1 | | | | | |
| 34 | 7957-405-003-00 | PIN/HAIR | * | 1 | | | | | |
| 35 | 8843-624-004-00 | JOINT,BLOWER | * | 1 | | | | | |
| 36 | 2232-665-005-10 | JOINT/BLOWER | * | 1 | | | | | |
| 37 | 2232-665-006-20 | DUCTHOSE/REAR/5 | * | 1 | | | | | |
| 38 | 2233-668-001-10 | JOINT/FERTILIZE/DUCT | * | 1 | | | | | |
| 39 | 2233-668-002-10 | DUCTHOSE/REAR/8 | * | 1 | | | | | |
| 40 | 2232-645-021-00 | BOLT/SP/M6X20/G | * | 3 | | | | | |
| 41 | V301-700-006-00 | NUT,SUS/M6 | * | 3 | | | | | |
| 42 | 2233-668-600-00 | COVER/DUCT/UPPER/8 | * | 1 | | | | | |
| 43 | 2232-665-601-00 | COVER/DUCT/LOWER | * | 1 | | | | | |
| 44 | 2204-738-059-00 | BOLT/M6X16 | * | 2 | | | | | |
| 45 | 2204-803-068-00 | NUT/WASER/M6/SUS | * | 2 | | | | | |
| 46 | 2232-666-005-00 | RUBBERBAND | * | 1 | | | | | |

# FIG.113 SEND OUT(FERTILIZER)SYSTEM(F TYPE)(1/3)

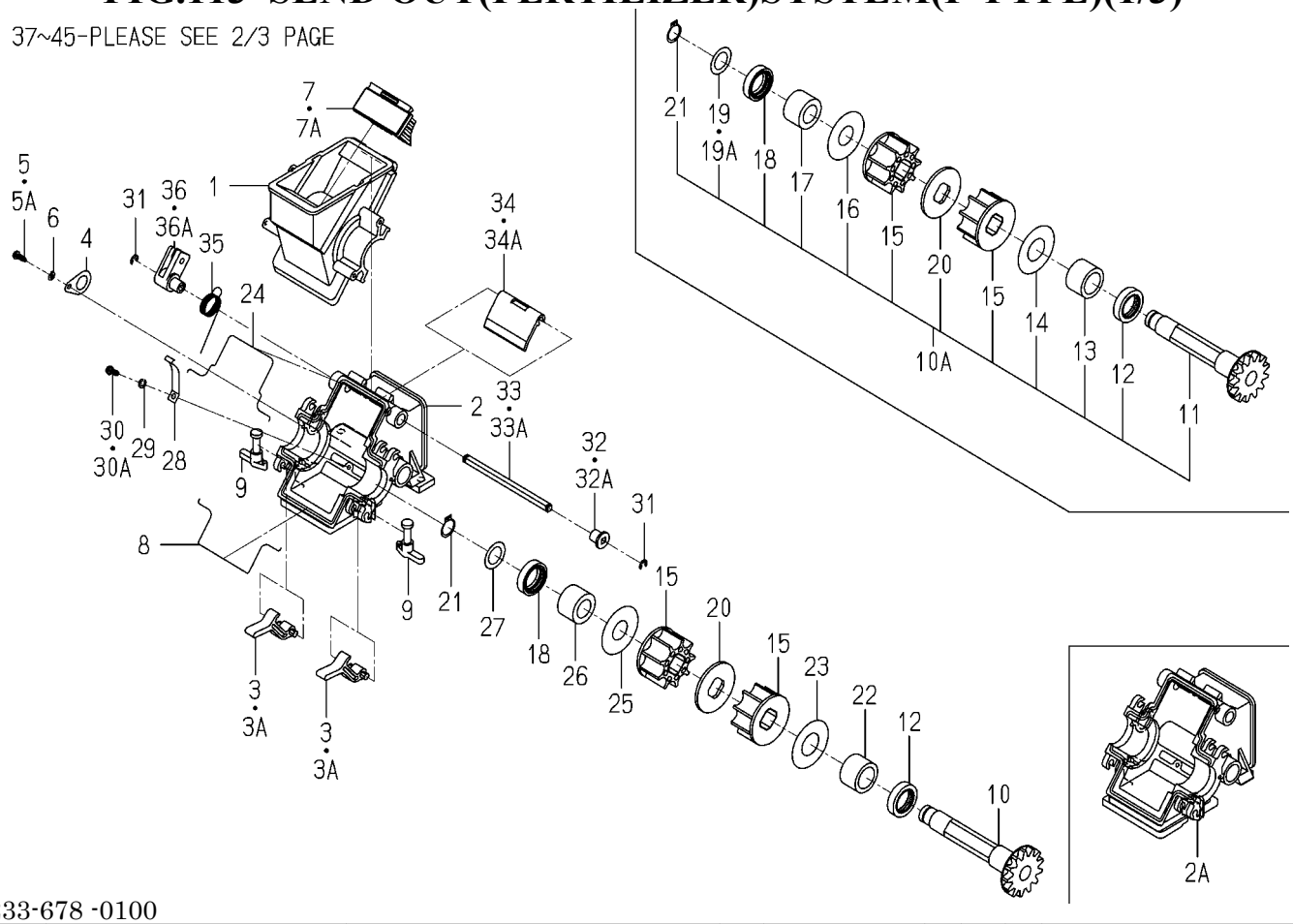


2233-678 -0100

| KEY | PART CODE | DESCRIPTION | SPC | TYPE OF MODEL NP80D E16 | | ITC | COL | GRP | REMARKS |
|---|---|---|---|---|---|---|---|---|---|
| 1 | 2232-675-201-00 | CAPSULE/UPPER/PZN | * | 4 | | | | | |
| 2 | 2232-675-202-00 | CAPSULE/LOWER/PZN | * | 4 -170 | | | | | |
| 2A | 2232-675-202-10 | CAPSULE/LOWER/NP | * | 4 171- | | 1 | | | |
| 3 | 8842-705-223-00 | HOOK,COUPSULE | * | 8 -170 | | | | | |
| 3A | 2232-675-259-00 | HOOK/CAPSULE | * | 8 171- | | | | | |
| 4 | 2232-675-213-00 | PALTE/GEAR | * | 4 | | | | | |
| 5 | V111-704-001-00 | SCREW/M4X10 | * | 4 -170 | | | | | |
| 5A | 2232-675-251-00 | SCREW/TAPPING | * | 4 171- | | | | | |
| 6 | V401-700-004-00 | WASHER,SP/M4 | * | 4 | | | | | |
| 7 | 2232-675-220-00 | BURUSH COMP | * | 4 -170 | | | | | |
| 7A | 2232-675-240-00 | BURUSH COMP | * | 4 171- | | | | | |
| 8 | 2232-675-205-00 | PACKING/CAPSULE/LOWE | * | 4 | | | | | |
| 9 | 2232-675-212-10 | HOOK/FUNNEL | * | 8 | | | | | |
| 10 | 8842-705-214-10 | GEAR,SPUR/13 | * | 4 -170 | | | | | |
| 10A | 2232-675-270-00 | ROLL/FERTILIZE ASSY | * | 4 | | | | | |
| 11 | 2232-675-254-00 | GEAR/SPUR/13 | * | 4 171- | | | | | |
| 12 | V744-120-300-70 | SEAL,OIL/TC20307 | * | 4 | | | | | |
| 13 | 2232-675-255-00 | BUSH/GEAR | * | 4 171- | | | | | |
| 14 | 2232-675-256-00 | WASHER/21X45X01 | * | 4 171- | | | | | |
| 15 | 2232-675-217-00 | ROLL | * | 8 | | | | | |
| 16 | 2232-675-261-00 | WASHER/18X45X1 | * | 4 171- | | | | | |
| 17 | 2232-675-257-00 | BUSH/17X28X19 | * | 4 171- | | | | | |
| 18 | V744-115-300-70 | SEAL,OIL/TC15307 | * | 4 | | | | | |
| 19 | 2232-675-258-00 | WASHER/16X25X0.4 | * | 4 -175 | | | | | |
| 19A | 2232-675-258-10 | WASHER/16X25X1.0 | * | 4 176- | | | | | |
| 20 | 2232-675-218-00 | COLLER/47X3 | * | 4 | | | | | |
| 21 | 2145-770-014-00 | RING, SNAP | * | 4 | | | | | |
| 22 | 8842-705-215-00 | BUSH,GEAR | * | 4 -170 | | | | | |
| 23 | 8842-705-216-00 | WASHER/21X45X01 | * | 4 -170 | | | | | |
| 24 | 2232-675-204-00 | PACKING/CAPSULE/UPPE | * | 4 | | | | | |

# FIG.113 SEND OUT(FERTILIZER)SYSTEM(F TYPE)(1/3)

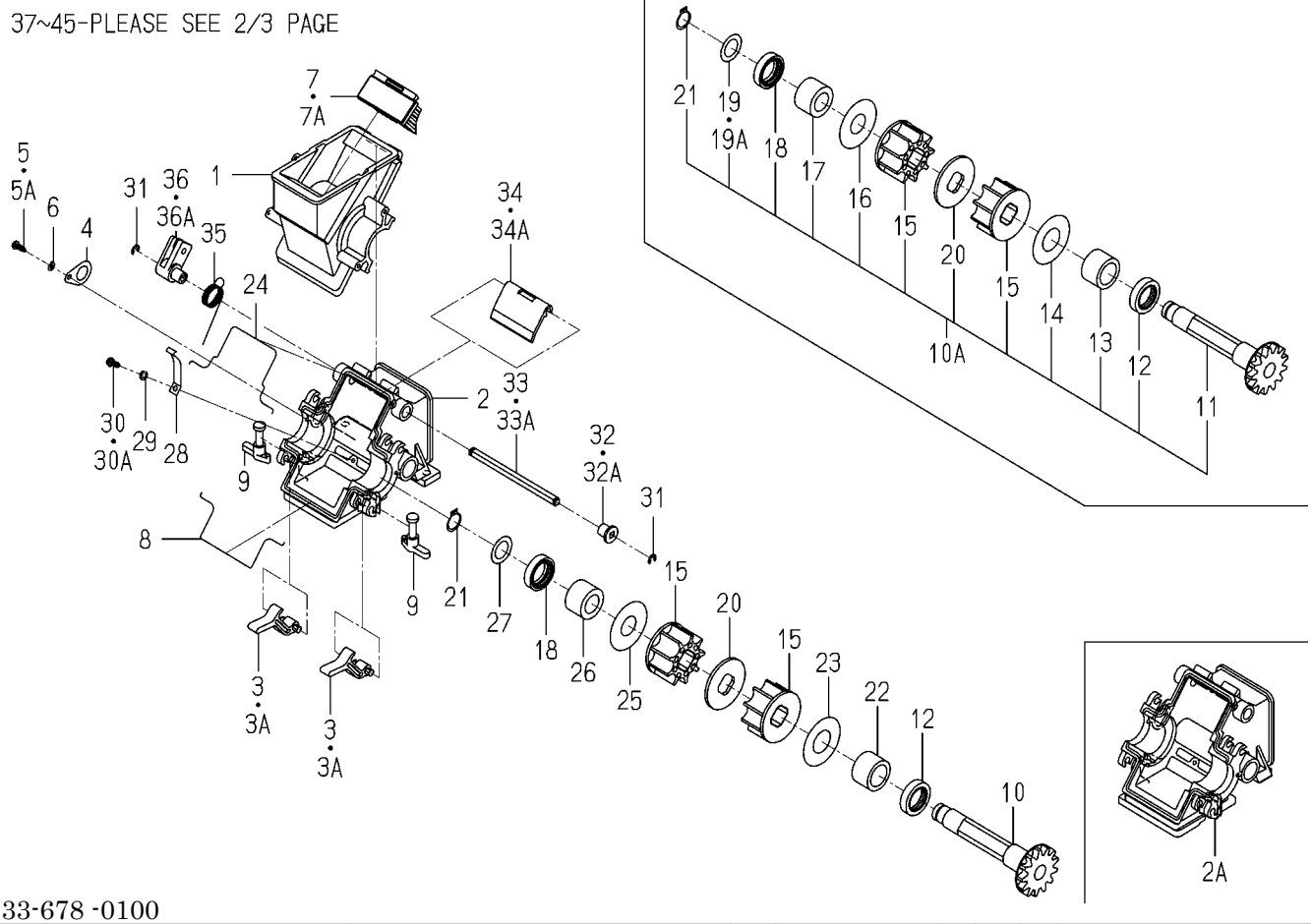


2233-678 -0100

| KEY | PART CODE | DESCRIPTION | SPC | TYPE OF MODEL NP80D E16 | | ITC | COL | GRP | REMARKS |
|---|---|---|---|---|---|---|---|---|---|
| 25 | 8842-705-224-00 | WASHER/18X45X1 | * | 4 -170 | | | | | |
| 26 | 8842-705-218-00 | BUSH/17X28X19 | * | 4 -170 | | | | | |
| 27 | 8842-705-219-00 | WASHER/16X25X0.4 | * | 4 -170 | | | | | |
| 28 | 2232-675-207-00 | PLATE/CAPSULE | * | 4 | | | | | |
| 29 | V401-700-004-00 | WASHER,SP/M4 | * | 4 | | | | | |
| 30 | 8842-705-032-00 | SCREW/TAPPING/M4X12 | * | 4 -170 | | | | | |
| 30A | 2232-675-251-00 | SCREW/TAPPING | * | 4 171- | | | | | |
| 31 | 8841-536-011-00 | RING, SNAP | * | 8 | | | | | |
| 32 | 8842-705-208-00 | BUSH,EXHAUST LEVER | * | 4 -170 | | | | | |
| 32A | 2232-675-252-00 | BUSH/DISCHARGELEVER | * | 4 171- | | | | | |
| 33 | 8842-705-211-10 | SHAFT/DISCHARGE | * | 4 -170 | | | | | |
| 33A | 2232-675-253-00 | SHAFT/DISCHARGE | * | 4 171- | | | | | |
| 34 | 2232-675-209-00 | SHUTTER/DISCHARGE | * | 4 -175 | | | | | |
| 34A | 2232-675-209-10 | SHUTTER/DISCHARGE | * | 4 176- | | 1 | | | |
| 35 | 2232-675-214-00 | SPRING/HT019/LH/Z | * | 4 | | | | | |
| 36 | 2232-675-211-00 | ARM/DISCHARGE | * | 4 -170 | | | | | |
| 36A | 2232-675-211-10 | ARM/DISCHARGE | * | 4 171- | | 1 | | | |
| 37 | 2232-675-201-00 | CAPSULE/UPPER/PZN | * | 4 | | | | | |
| 38 | 2232-675-202-00 | CAPSULE/LOWER/PZN | * | 4 -170 | | | | | |
| 38A | 2232-675-202-10 | CAPSULE/LOWER/NP | * | 4 171- | | 1 | | | |
| 39 | 8842-705-223-00 | HOOK,COUPSULE | * | 8 -170 | | | | | |
| 39A | 2232-675-259-00 | HOOK/CAPSULE | * | 8 171- | | | | | |
| 40 | 2232-675-213-00 | PALTE/GEAR | * | 4 | | | | | |
| 41 | V111-704-001-00 | SCREW/M4X10 | * | 4 -170 | | | | | |
| 41A | 2232-675-251-00 | SCREW/TAPPING | * | 4 171- | | | | | |
| 42 | V401-700-004-00 | WASHER,SP/M4 | * | 4 | | | | | |
| 43 | 2232-675-220-00 | BURUSH COMP | * | 4 -170 | | | | | |
| 43A | 2232-675-240-00 | BURUSH COMP | * | 4 171- | | | | | |
| 44 | 2232-675-205-00 | PACKING/CAPSULE/LOWE | * | 4 | | | | | |
| 45 | 2232-675-212-10 | HOOK/FUNNEL | * | 8 | | | | | |

# FIG.113 SEND OUT(FERTILIZER)SYSTEM(F TYPE)(2/3)

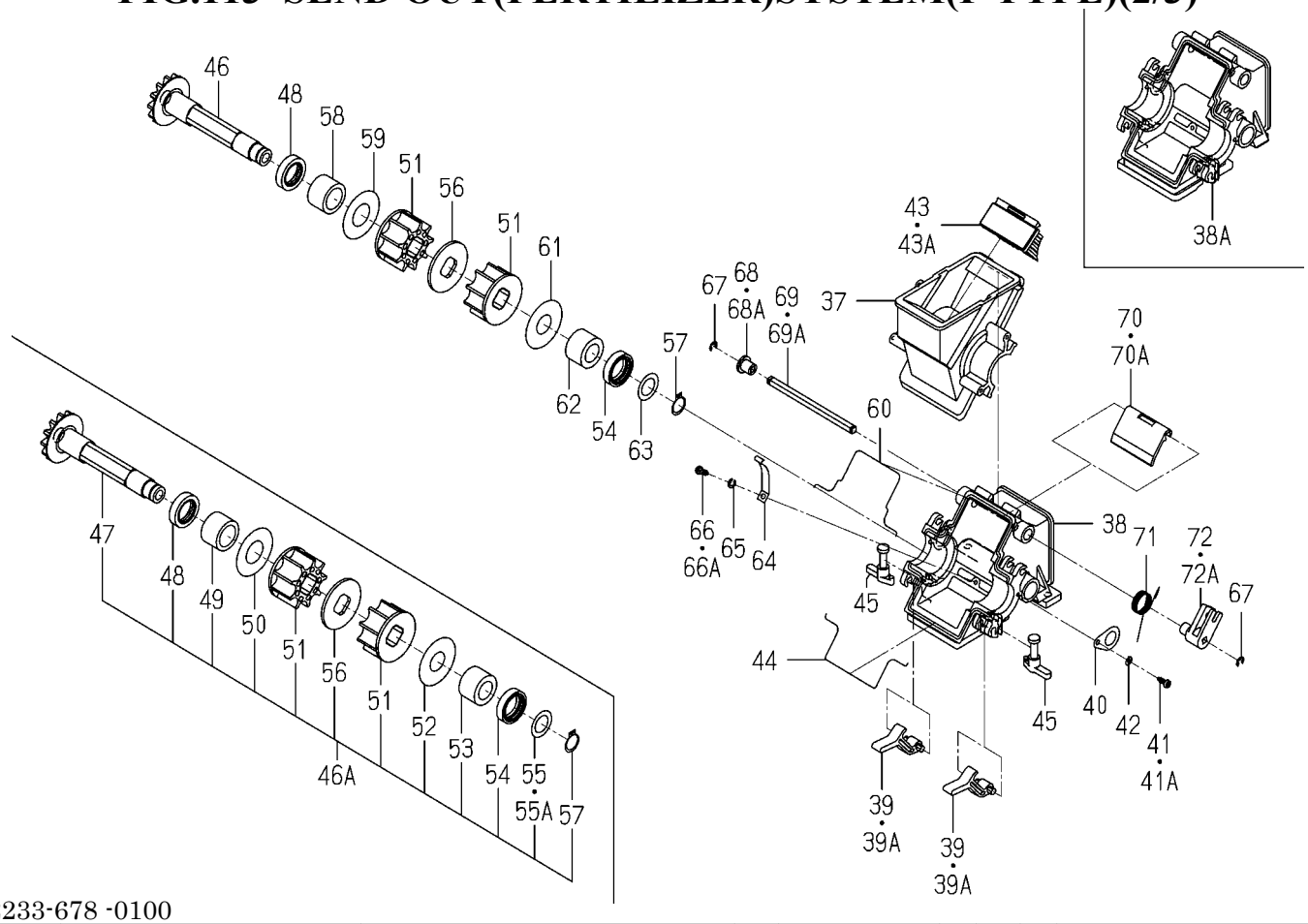


2233-678 -0100

| KEY | PART CODE | DESCRIPTION | SPC | TYPE OF MODEL NP80D | TYPE OF MODEL E16 | ITC | COL | GRP | REMARKS |
|---|---|---|---|---|---|---|---|---|---|
| 46 | 8842-705-214-10 | GEAR,SPUR/13 | * | 4 -170 | | | | | |
| 46A | 2232-675-270-00 | ROLL/FERTILIZE ASSY | * | 4 | | | | | |
| 47 | 2232-675-254-00 | GEAR/SPUR/13 | * | 4 171- | | | | | |
| 48 | V744-120-300-70 | SEAL,OIL/TC20307 | * | 4 | | | | | |
| 49 | 2232-675-255-00 | BUSH/GEAR | * | 4 171- | | | | | |
| 50 | 2232-675-256-00 | WASHER/21X45X01 | * | 4 171- | | | | | |
| 51 | 2232-675-217-00 | ROLL | * | 8 | | | | | |
| 52 | 2232-675-261-00 | WASHER/18X45X1 | * | 4 171- | | | | | |
| 53 | 2232-675-257-00 | BUSH/17X28X19 | * | 4 171- | | | | | |
| 54 | V744-115-300-70 | SEAL,OIL/TC15307 | * | 4 | | | | | |
| 55 | 2232-675-258-00 | WASHER/16X25X0.4 | * | 4 -175 | | | | | |
| 55A | 2232-675-258-10 | WASHER/16X25X1.0 | * | 4 176- | | | | | |
| 56 | 2232-675-218-00 | COLLER/47X3 | * | 4 | | | | | |
| 57 | 2145-770-014-00 | RING, SNAP | * | 4 | | | | | |
| 58 | 8842-705-215-00 | BUSH,GEAR | * | 4 -170 | | | | | |
| 59 | 8842-705-216-00 | WASHER/21X45X01 | * | 4 -170 | | | | | |
| 60 | 2232-675-204-00 | PACKING/CAPSULE/UPPE | * | 4 | | | | | |
| 61 | 8842-705-224-00 | WASHER/18X45X1 | * | 4 -170 | | | | | |
| 62 | 8842-705-218-00 | BUSH/17X28X19 | * | 4 -170 | | | | | |
| 63 | 8842-705-219-00 | WASHER/16X25X0.4 | * | 4 -170 | | | | | |
| 64 | 2232-675-207-00 | PLATE/CAPSULE | * | 4 | | | | | |
| 65 | V401-700-004-00 | WASHER,SP/M4 | * | 4 | | | | | |
| 66 | 8842-705-032-00 | SCREW/TAPPING/M4X12 | * | 4 -170 | | | | | |
| 66A | 2232-675-251-00 | SCREW/TAPPING | * | 4 171- | | | | | |
| 67 | 8841-536-011-00 | RING, SNAP | * | 8 | | | | | |
| 68 | 8842-705-208-00 | BUSH,EXHAUST LEVER | * | 4 -170 | | | | | |
| 68A | 2232-675-252-00 | BUSH/DISCHARGELEVER | * | 4 171- | | | | | |
| 69 | 8842-705-211-10 | SHAFT/DISCHARGE | * | 4 -170 | | | | | |
| 69A | 2232-675-253-00 | SHAFT/DISCHARGE | * | 4 171- | | | | | |
| 70 | 2232-675-209-00 | SHUTTER/DISCHARGE | * | 4 -175 | | | | | |

# FIG.113 SEND OUT(FERTILIZER)SYSTEM(F TYPE)(3/3)

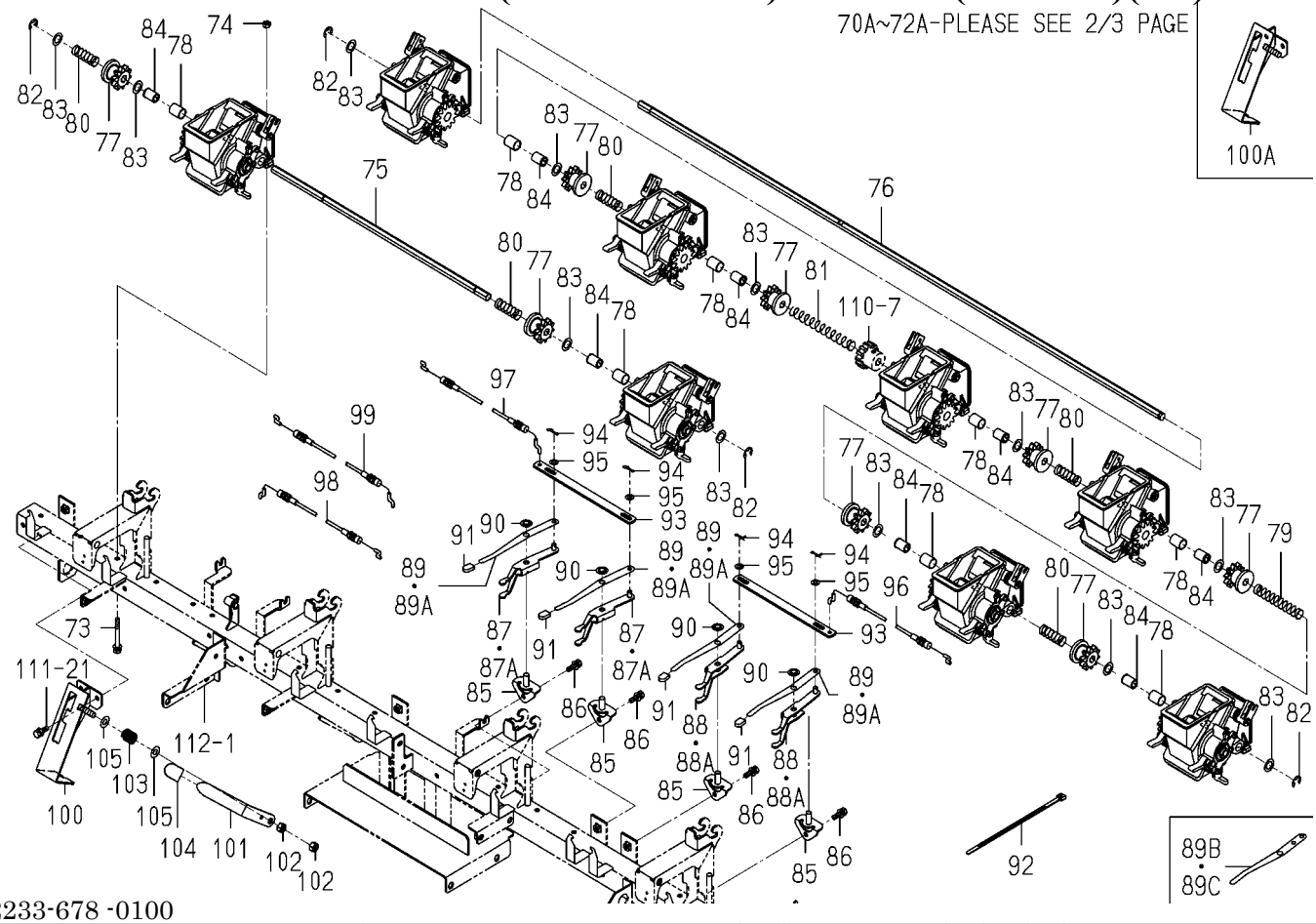


2233-678 -0100

| KEY | PART CODE | DESCRIPTION | SPC | TYPE OF MODEL NP80D | E16 | ITC | COL | GRP | REMARKS |
|---|---|---|---|---|---|---|---|---|---|
| 70A | 2232-675-209-10 | SHUTTER/DISCHARGE | * | 4 176- | | 1 | | | |
| 71 | 2232-675-215-00 | SPRING/HT019/RH/Z | * | 4 | | | | | |
| 72 | 2232-675-211-00 | ARM/DISCHARGE | * | 4 -170 | | | | | |
| 72A | 2232-675-211-10 | ARM/DISCHARGE | * | 4 171- | | 1 | | | |
| 73 | 2232-645-022-00 | BOLT/SPM6X55/G | * | 16 | | | | | |
| 74 | V301-700-006-00 | NUT,SUS/M6 | * | 16 | | | | | |
| 75 | 2232-676-001-10 | SHAFT/FERTILIZE/6RH | * | 1 | | | | | |
| 76 | 2233-678-003-00 | SHAFT/FERTILIZE/8RH | * | 1 | | | | | |
| 77 | 2232-675-004-00 | GEAR/SPUR/10 | * | 8 | | | | | |
| 78 | 3646-102-011-10 | BUSH/14X16X20 | * | 8 | | | | | |
| 79 | 2232-675-006-00 | SPRING/HC093 | * | 1 | | | | | |
| 80 | 2232-675-008-00 | SPRING/HC044 | * | 5 | | | | | |
| 81 | 2232-675-007-00 | SPRING/HC128 | * | 1 | | | | | |
| 82 | 8842-515-022-00 | RING, SNAP | * | 4 | | | | | |
| 83 | 8836-703-055-00 | WASHER/M12X20X01 | * | 12 | | | | | |
| 84 | 2186-805-003-00 | BUSH,SEEDLING | * | 8 | | | | | |
| 85 | 2232-675-230-10 | CLUTCHFULCRUM | * | 8 | | | | | |
| 86 | 2232-645-021-00 | BOLT/SP/M6X20/G | * | 8 | | | | | |
| 87 | 2232-676-300-20 | FORK/CULTCH/LH/ COMP | * | 4 -275 | | | | | |
| 87A | 2232-676-300-30 | FORK/CLUTCH/LH/ COMP | * | 4 276- | | 1 | | | |
| 88 | 2232-676-310-20 | FORK/CULTCH/RH/ COMP | * | 4 -275 | | | | | |
| 88A | 2232-676-310-30 | FORK/CLUTCH/RH/Z | * | 4 276- | | 1 | | | |
| 89 | 2232-676-031-10 | LEVER/FERTILIZE CLUT | * | 8 -175 | | | | | |
| 89A | 2232-676-031-20 | LEVER/FERTILIZE CLUT | * | 8 -275 | | 1 | | | |
| 89B | 2232-676-031-30 | LEVER/FERTILIZE/CLUT | * | 8 -275 | | 1 | | | |
| 89C | 2232-676-031-40 | LEVER/FERTILIZE/CLUT | * | 8 276- | | 1 | | | |
| 90 | 2232-676-035-00 | PUSHNUT/08/SUS | * | 8 | | | | | |
| 91 | 2232-676-032-00 | CAP/FERTILIZECLUTCH | * | 8 | | | | | |
| 92 | 1376-402-003-00 | BAND,WIRE/140 | * | 8 | | | | | |
| 93 | 2232-675-001-10 | PLATE/IR/16X211 | * | 4 | | | | | |

# FIG.113 SEND OUT(FERTILIZER)SYSTEM(F TYPE)(3/3)

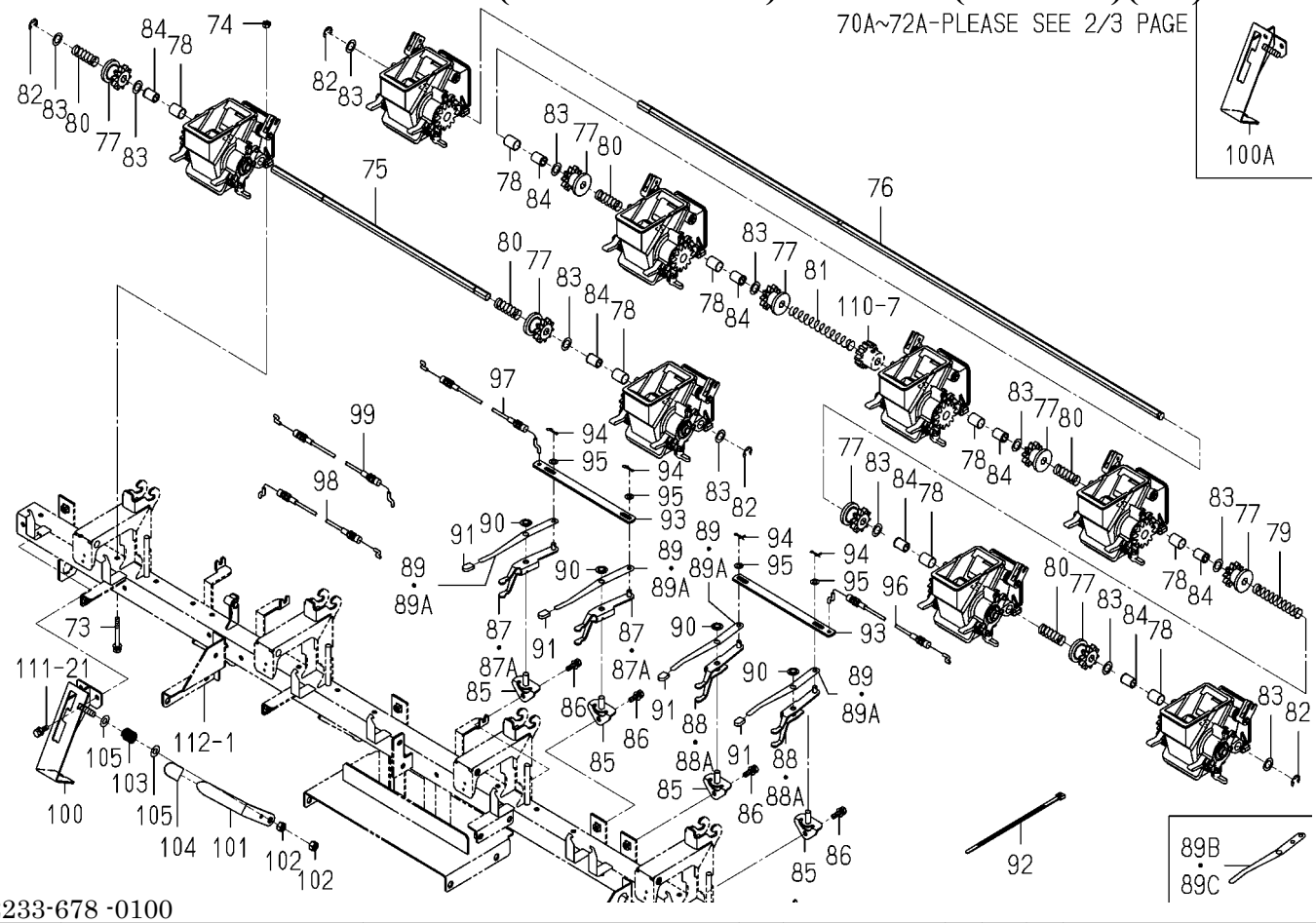


2233-678 -0100

| KEY | PART CODE | DESCRIPTION | SPC | TYPE OF MODEL NP80D E16 | | ITC | COL | GRP | REMARKS |
|---|---|---|---|---|---|---|---|---|---|
| 94 | 2161-735-005-00 | PIN | * | 8 | | | | | |
| 95 | V411-700-006-00 | WASHER,PL/M6 | * | 8 | | | | | |
| 96 | 2233-678-510-00 | CABLE/FERTILIZE/8L | * | 1 | | | | | |
| 97 | 2233-678-520-00 | CABLE/FERTILIZE/8CL | * | 1 | | | | | |
| 98 | 2233-678-530-00 | CABLE/FERTILIZE/8CR | * | 1 | | | | | |
| 99 | 2233-678-540-00 | CABLE/FERTILIZE/8R | * | 1 | | | | | |
| 100 | 2233-678-200-00 | BASE/TOTALCLUTC COMP | * | 1 -175 | | | | | |
| 100A | 2233-678-200-10 | BASE/TOTALCLUTC COMP | * | 1 176- | | 1 | | | |
| 101 | 2233-678-004-00 | LEVER/TOTALCLUTCH | * | 1 | | | | | |
| 102 | V304-260-008-00 | NUT/M8 | * | 2 | | | | | |
| 103 | 2172-124-004-00 | SPRING | * | 1 | | | | | |
| 104 | 8841-536-018-00 | CAP | * | 1 | | | | | |
| 105 | V411-700-008-00 | WASHER,PL/M8 | * | 2 | | | | | |

# FIG.114 HOPPER(FERTILIZER)SYSTEM(F TYPE)

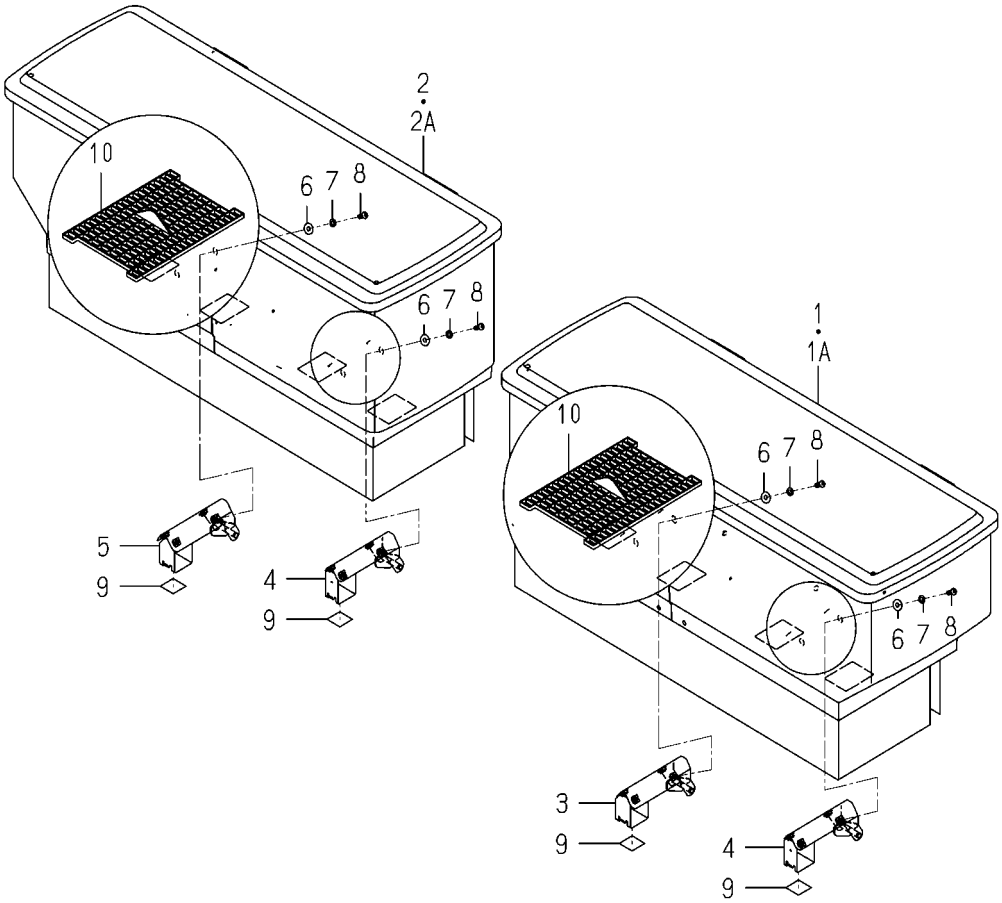


2233-688 -0100

| KEY | PART CODE | DESCRIPTION | SPC | TYPE OF MODEL NP80D E16 | | ITC | COL | GRP | REMARKS |
|---|---|---|---|---|---|---|---|---|---|
| 1 | 2233-688-250-60 | HOPPER/4/LH COMP | * | 1 -80 | | | | | FIG 157 |
| 1A | 2233-688-310-00 | HOPPER/4/LH COMP | * | 1 81- | | | | | FIG 159 |
| 2 | 2233-688-270-60 | HOPPER/4/RH COMP | * | 1 -80 | | | | | FIG 158 |
| 2A | 2233-688-320-00 | HOPPER/4/RH COMP | * | 1 81- | | | | | FIG 160 |
| 3 | 2233-688-200-10 | STAY/HOPPER/LH/ COMP | * | 1 | | | | | |
| 4 | 2233-688-210-10 | STAY/HOPPER/OUT COMP | * | 2 | | | | | |
| 5 | 2233-688-220-10 | STAY/HOPPER/RH/ COMP | * | 1 | | | | | |
| 6 | 2182-803-008-00 | WASHER/07X18X1.5 | * | 16 | | | | | |
| 7 | V401-700-006-00 | WASHER,SP/M6 | * | 16 | | | | | |
| 8 | V111-706-001-60 | SCREW/M6X16 | * | 16 | | | | | |
| 9 | 8842-605-004-10 | PLATE,RUBBER/20X25X0 | * | 4 | | | | | |
| 10 | 2232-685-002-00 | HOPPERNET | * | 8 | | | | | |

# FIG.115 PIPING(FERTILIZER)SYSTEM(F TYPE)

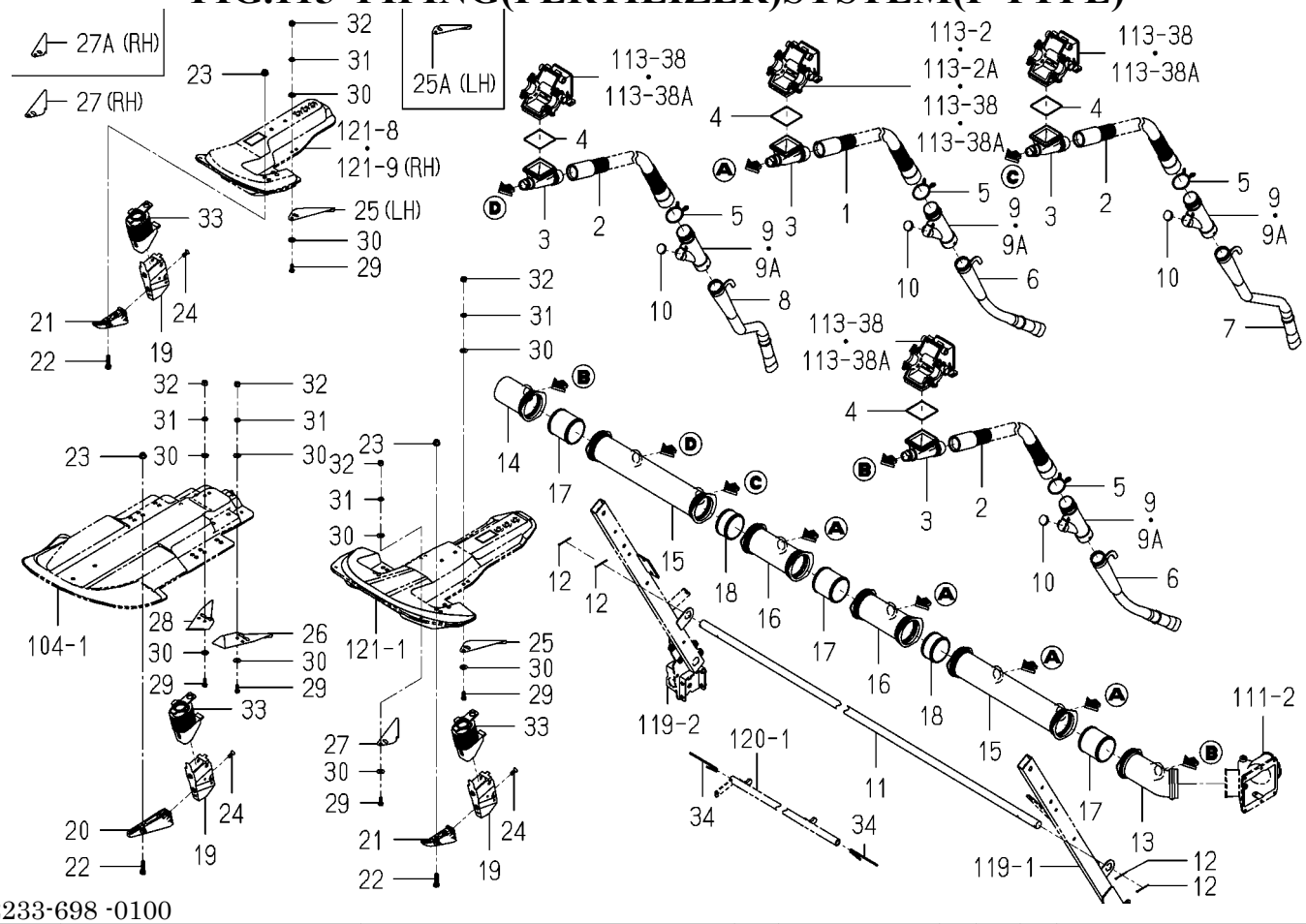


2233-698 -0100

| KEY | PART CODE | DESCRIPTION | SPC | TYPE OF MODEL NP80D E16 | | ITC | COL | GRP | REMARKS |
|---|---|---|---|---|---|---|---|---|---|
| 1 | 8844-726-220-00 | HOSE/FERTILIZER/6 | * | 4 | | | | | |
| 2 | 8844-727-200-00 | HOSE/FERTILIZER/7 | * | 4 | | | | | |
| 3 | 2232-672-007-00 | ROHTO | * | 8 | | | | | |
| 4 | 2232-672-008-10 | PACKING/ROHTO | * | 8 | | | | | |
| 5 | 8836-706-006-10 | CLAMP,SPRING/4 | * | 8 | | | | | |
| 6 | 2232-691-057-20 | HOSE/FERTILIZER/STRA | * | 6 | | | | | |
| 7 | 2232-691-058-20 | HOSE/FERTILIZER/LH | * | 1 | | | | | |
| 8 | 2232-691-059-20 | HOSE/FERTILIZER/RH | * | 1 | | | | | |
| 9 | 2232-691-300-00 | HOSE/FERTILIZER/UPPE | * | 8 -39 | | | | | |
| 9A | 2232-691-300-10 | HOSE/FERTILIZER/UPPE | * | 8 40- | | 1 | | | |
| 10 | 8845-724-270-00 | HOSE/WEIGHT/PPZ | * | 8 | | | | | |
| 11 | 2233-692-001-00 | TUBE/HOSE/8 | * | 1 | | | | | |
| 12 | V500-162-503-50 | PIN,SPLIT/2.5X35 | * | 4 | | | | | |
| 13 | 2232-675-021-00 | JOINT/FERTLIZE/LH | * | 1 | | | | | |
| 14 | 2232-675-023-00 | JOINT/FERTLIZE/RH | * | 1 | | | | | |
| 15 | 2232-675-022-00 | JOINT/FERTLIZE/CENTE | * | 2 | | | | | |
| 16 | 2232-675-025-00 | JOINT/FERTLIZE/1 | * | 2 | | | | | |
| 17 | 2232-675-024-00 | JOINT/66 | * | 3 | | | | | |
| 18 | 2233-678-001-00 | JOINT/38 | * | 2 | | | | | |
| 19 | 2232-696-300-00 | DICTHER/NP | * | 8 | | | | | |
| 20 | 2232-692-004-00 | GUIDE/DICTHER/CENTER | * | 2 | | | | | |
| 21 | 2232-692-005-00 | GUIDE/DICTHER/SIDE | * | 6 | | | | | |
| 22 | V200-700-803-00 | BOLT,SUS/M8X30 | * | 8 | | | | | |
| 23 | 8844-746-008-00 | NUT/WASHER | * | 8 | | | | | |
| 24 | 8844-745-013-00 | SCREW/6 | * | 8 | | | | | |
| 25 | 2232-691-054-00 | PLATE/SOIL COVERING/ | * | 3 -80 | | | | | |
| 25A | 2232-691-054-10 | PLATE/SOIL COVERING/ | * | 3 81- | | 1 | | | |
| 26 | 8836-602-005-10 | PLATE/SOIL COVERING/ | * | 1 | | | | | |
| 27 | 2232-691-055-00 | PLATE/SOIL COVERING/ | * | 3 -80 | | | | | |
| 27A | 2232-691-055-10 | PLATE/SOIL COVERING/ | * | 3 81- | | 1 | | | |

# FIG.115 PIPING(FERTILIZER)SYSTEM(F TYPE)

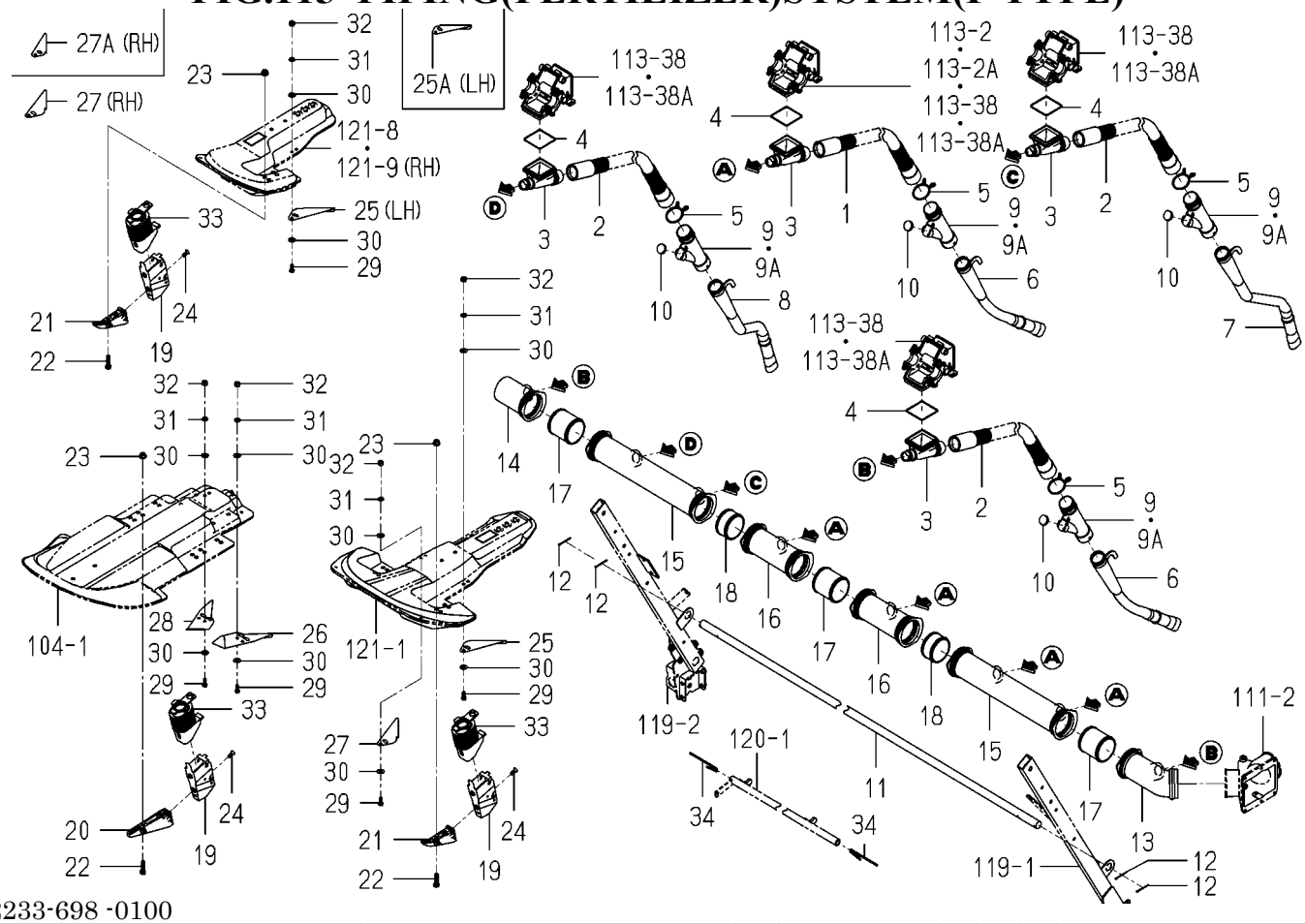


2233-698 -0100

| KEY | PART CODE | DESCRIPTION | SPC | TYPE OF MODEL NP80D | TYPE OF MODEL E16 | ITC | COL | GRP | REMARKS |
|---|---|---|---|---|---|---|---|---|---|
| 28 | 8836-602-006-10 | PLATE/SOIL COVERING/ | * | 1 | | | | | |
| 29 | V200-700-601-60 | BOLT,SUS/M6X16 | * | 16 | | | | | |
| 30 | V411-700-006-00 | WASHER,PL/M6 | * | 32 | | | | | |
| 31 | V401-700-006-00 | WASHER,SP/M6 | * | 16 | | | | | |
| 32 | V301-700-006-00 | NUT,SUS/M6 | * | 16 | | | | | |
| 33 | 8844-746-007-00 | CAP | * | 8 | | | | | |
| 34 | 2233-698-001-00 | GUIDE/FERTILIZERHOSE | * | 2 | | | | | |

# FIG.116 FRAME(SIDE)SYSTEM

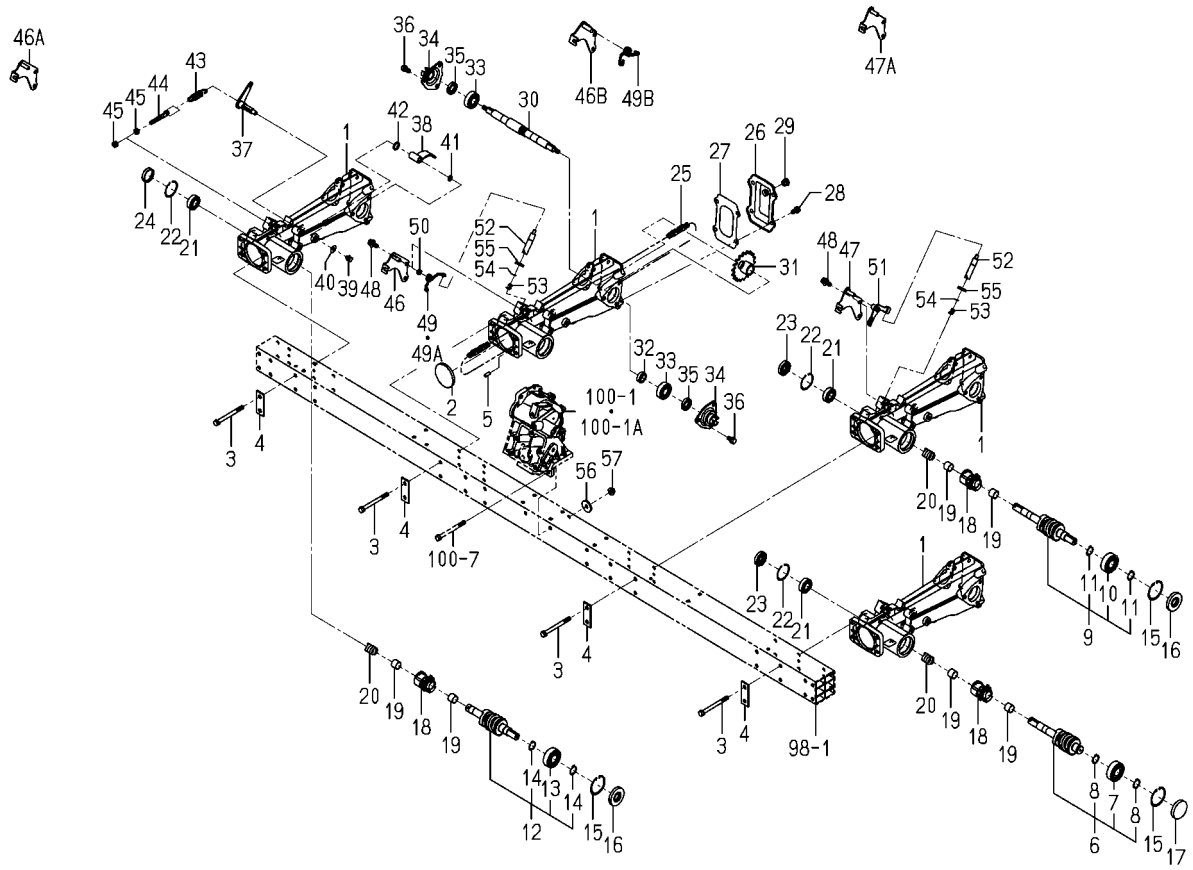


2233-701 -0100

| KEY | PART CODE | DESCRIPTION | SPC | TYPE OF MODEL NP80D | TYPE OF MODEL E16 | ITC | COL | GRP | REMARKS |
|---|---|---|---|---|---|---|---|---|---|
| 1 | 2233-701-002-20 | CASE/SUPPORTFRAME/8 | * | 4 | | 1 | | | |
| 2 | 3640-547-007-00 | PLUG,CAP/62X6 | * | 4 | | | | | |
| 3 | 2232-603-003-10 | BOLT/M8X90 | * | 16 | | | | | |
| 4 | 2232-603-002-10 | PLATE/I/24X64 | * | 8 | | | | | |
| 5 | V522-100-601-60 | PIN,ST,A/6X16 | * | 8 | | | | | |
| 6 | 2232-701-310-00 | SAFETY CLUTCH/NP/LH | * | 1 | | | | | |
| 7 | V600-110-620-40 | BEARING,RB/6204 | * | 1 | | | | | |
| 8 | V704-140-020-00 | RING,SNAP/20 C | * | 2 | | | | | |
| 9 | 2232-701-330-00 | SAFETY CLUTCH/NP/CEN | * | 2 | | | | | |
| 10 | V600-110-620-40 | BEARING,RB/6204 | * | 2 | | | | | |
| 11 | V704-140-020-00 | RING,SNAP/20 C | * | 4 | | | | | |
| 12 | 2232-701-350-00 | SAFETY CLUTCH/NP/RH | * | 1 | | | | | |
| 13 | V600-110-620-40 | BEARING,RB/6204 | * | 1 | | | | | |
| 14 | V704-140-020-00 | RING,SNAP/20 C | * | 2 | | | | | |
| 15 | V705-140-047-00 | RING,SNAP/47 C | * | 4 | | | | | |
| 16 | V744-120-470-70 | SEAL,OIL/TC20477 | * | 3 | | | | | |
| 17 | 2194-701-010-00 | PLUG/47 | * | 1 | | | | | |
| 18 | 2232-701-002-00 | SPROCKET/CLUTCH | * | 4 | | | | | |
| 19 | 2213-701-023-00 | BUSH/17X19X15 | * | 8 | | | | | |
| 20 | 2194-701-020-00 | SPRING | * | 4 | | | | | |
| 21 | V600-110-600-30 | BEARING,RB/6003 | * | 4 | | | | | |
| 22 | V705-140-035-00 | RING,SNAP/35 C | * | 4 | | | | | |
| 23 | V744-117-350-70 | SEAL,OIL/TC17357 | * | 3 | | | | | |
| 24 | 3737-211-007-00 | CAP/35 | * | 1 | | | | | |
| 25 | 2232-701-017-00 | CHAIN/ROLLER/60 | * | 4 | | | | | |
| 26 | 2161-701-005-10 | COVER/FRAME | * | 4 | | | | | |
| 27 | 2161-701-006-10 | GASKET | * | 4 | | | | | |
| 28 | 2232-701-068-00 | BOLT/S/M8X16/G | * | 16 | | | | | |
| 29 | 2142-736-236-00 | PLUG | * | 4 | | | | | |
| 30 | 2232-701-004-00 | SHAFT/PLANTINGARM | * | 4 | | | | | |

# FIG.116 FRAME(SIDE)SYSTEM

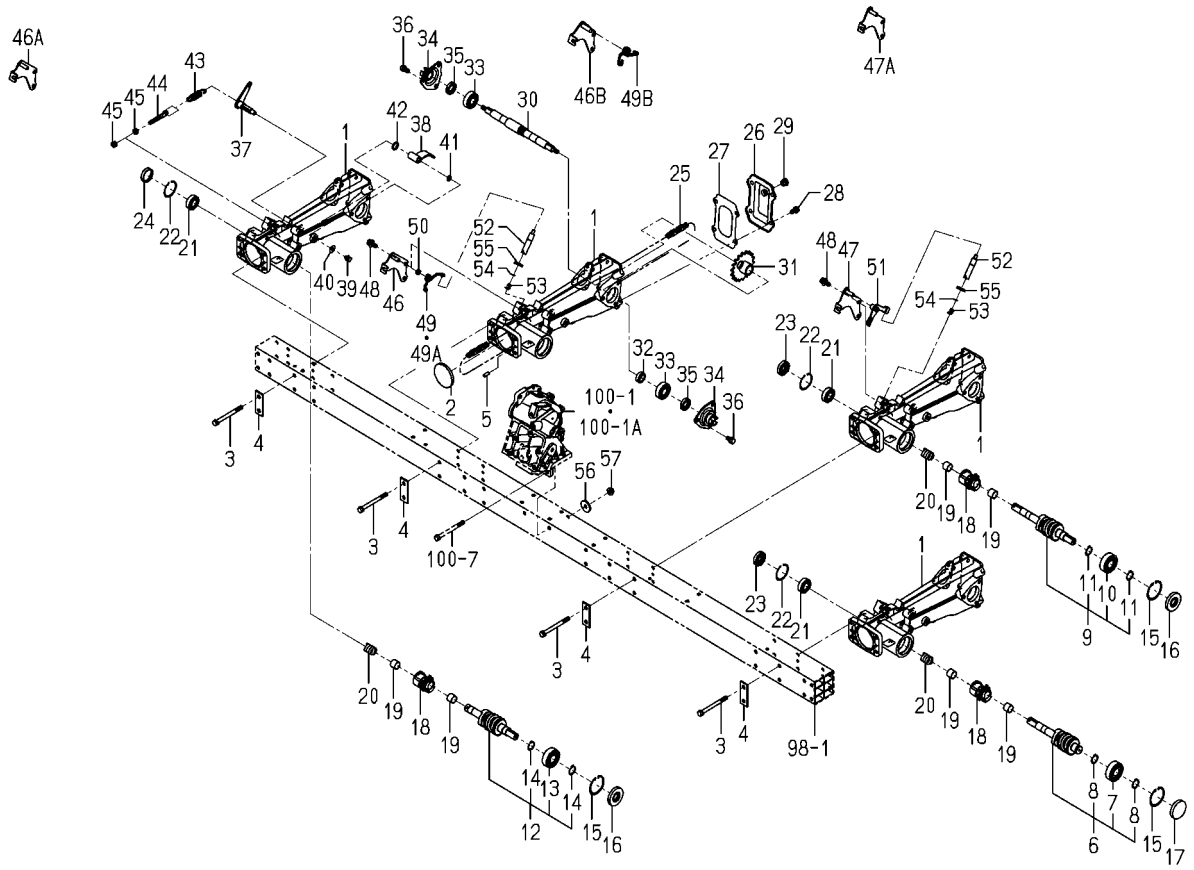


2233-701 -0100

| KEY | PART CODE | DESCRIPTION | SPC | TYPE OF MODEL NP80D E16 | | ITC | COL | GRP | REMARKS |
|---|---|---|---|---|---|---|---|---|---|
| 31 | 2232-701-022-30 | SPROCKET/18 | * | 4 | | | | | |
| 32 | 2232-701-003-00 | COLLAR/17X25X08 | * | 4 | | | | | |
| 33 | V600-110-620-30 | BEARING,RB/6203 | * | 8 | | | | | |
| 34 | 2186-703-220-02 | METAL/S COMP | * | 8 | | | 5N | | |
| 35 | V740-117-300-60 | SEAL,OIL/SC17306 | * | 8 | | | | | |
| 36 | V211-260-801-60 | BOLT,S/M8X16 | * | 24 | | | | | |
| 37 | 2233-701-210-00 | ARM/TENSIONER COMP | * | 4 | | | | | |
| 38 | 2233-701-220-00 | TENSIONER/CHAIN COMP | * | 4 | | | | | |
| 39 | V210-260-601-20 | BOLT,S/M6X12 | * | 4 | | | | | |
| 40 | 3560-503-302-00 | WASHER,WIRE TENSION | * | 4 | | | | | |
| 41 | V720-101-900-90 | O-RING/1A,P9 | * | 4 | | | | | |
| 42 | V720-102-401-50 | O-RING/1A,P15 | * | 4 | | | | | |
| 43 | 2137-107-002-10 | SPRING/CHANGE/HE057 | * | 4 | | | | | |
| 44 | 2233-701-003-00 | ROD/TENSIONER | * | 4 | | | | | |
| 45 | V304-460-008-00 | NUT/M8/7T | * | 8 | | | | | |
| 46 | 2232-701-220-20 | STAY/AZECLUTCH COMP | * | 3 -80 | | | | | |
| 46A | 2232-701-220-30 | STAY/AZECLUTCH COMP | * | 3 -173 | | 1 | | | |
| 46B | 2232-701-220-40 | STAY/AZECLUTCH COMP | * | 4 174- | | 3 | | | |
| 47 | 2232-701-260-30 | STAY/AZECLUTCH COMP | * | 1 -80 | | | | | |
| 47A | 2232-701-260-40 | STAY/AZECLUTCH COMP | * | 1 -175 | | 1 | | | |
| 48 | V211-360-802-00 | BOLT,SP/M8X20 | * | 4 | | | | | |
| 49 | 2232-701-024-00 | SPRING/HT013 | * | 3 -80 | | | | | |
| 49A | 2232-701-024-10 | SPRING/HT013 | * | 3 -173 | | 1 | | | |
| 49B | 2232-701-024-20 | SPRING/HT016 | * | 4 174- | | 3 | | | |
| 50 | 2232-701-067-00 | COLLAR/08X12X05) | * | 3 -173 | | | | | |
| 51 | 2232-701-270-10 | ARM/CLUTCH/AZE COMP | * | 1 -175 | | | | | |
| 52 | 2232-701-012-20 | PIN/AZECLUTCH | * | 4 | | | | | |
| 53 | 2232-701-013-10 | SPRING/HC015 | * | 4 | | | | | |
| 54 | V704-140-012-00 | RING,SNAP/12 C | * | 4 | | | | | |
| 55 | 2145-751-003-00 | SEAL,OIL | * | 4 | | | | | |

# FIG.116 FRAME(SIDE)SYSTEM

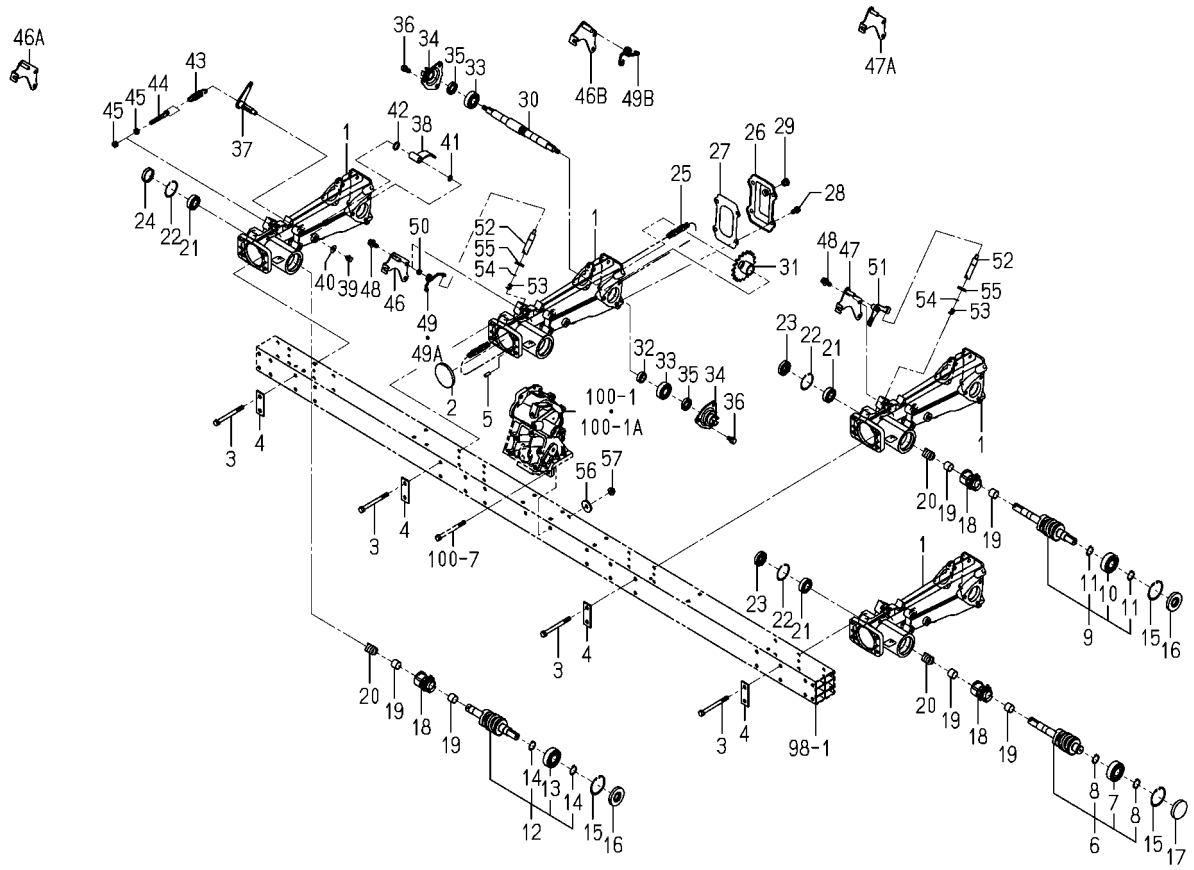


2233-701 -0100

| KEY | PART CODE | DESCRIPTION | SPC | TYPE OF MODEL NP80D E16 | | ITC | COL | GRP | REMARKS |
|---|---|---|---|---|---|---|---|---|---|
| 56 | 3740-314-017-00 | WASHER,TENSION | * | 2 | | | | | |
| 57 | V362-260-008-00 | NUT/WASHER/M8 | * | 2 | | | | | |

# FIG.117 DRIVE(PLANTING)SYSTEM

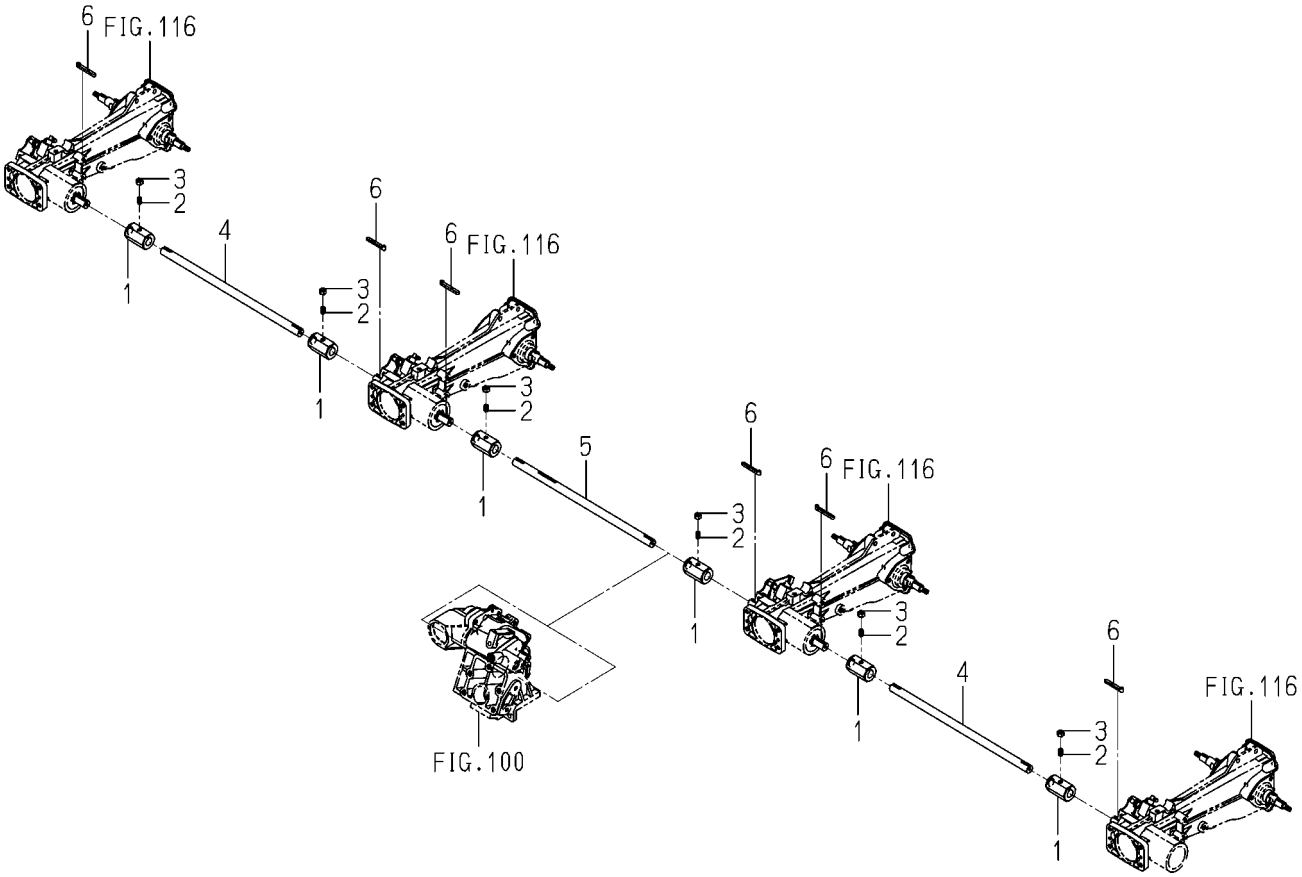


2233-702 -0100

| KEY | PART CODE | DESCRIPTION | SPC | TYPE OF MODEL NP80D E16 | | ITC | COL | GRP | REMARKS |
|---|---|---|---|---|---|---|---|---|---|
| 1 | 2232-702-001-10 | COUPLING/DRAIVE | * | 6 | | | | | |
| 2 | 3922-420-211-00 | SCREW/SET | * | 6 | | | | | |
| 3 | V304-260-008-00 | NUT/M8 | * | 6 | | | | | |
| 4 | 2232-702-002-10 | SHAFT/DRIVE/6 | * | 2 | | | | | |
| 5 | 2233-702-001-10 | SHAFT/DRIVE/8 | * | 1 | | | | | |
| 6 | 2232-702-007-00 | KEY/05X05X51 | * | 6 | | | | | |

# FIG.118 PUMP(OILING/SLIDER)SYSTEM

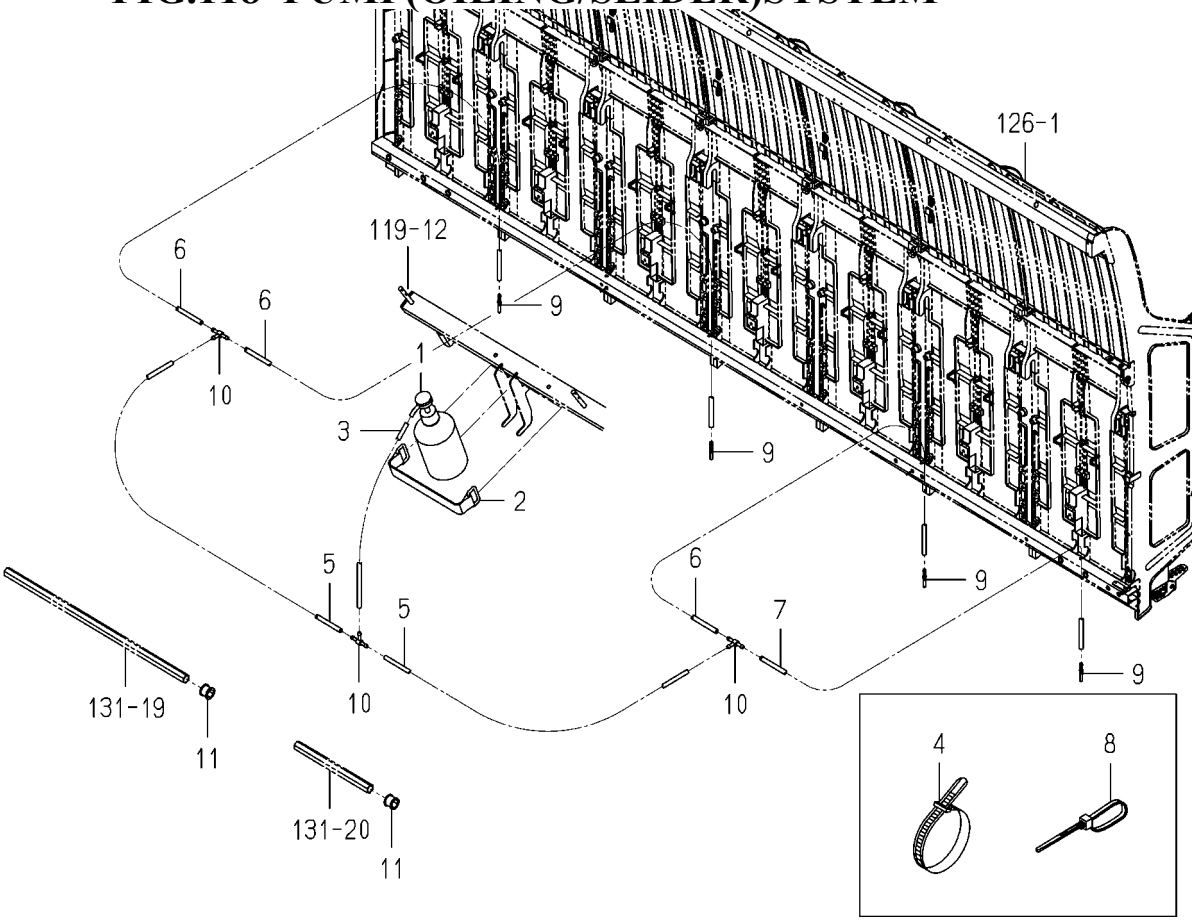


2233-703 -0100

| KEY | PART CODE | DESCRIPTION | SPC | TYPE OF MODEL NP80D E16 | | ITC | COL | GRP | REMARKS |
|---|---|---|---|---|---|---|---|---|---|
| 1 | 2213-703-210-10 | PUMP/OILSET | * | 1 | | | | | |
| 2 | 3640-260-200-30 | BATTERYSTAY COMP | * | 1 | | | | | |
| 3 | 2220-703-001-00 | HOSE/08X1160 | * | 1 | | | | | |
| 4 | 1376-402-003-00 | BAND,WIRE/140 | * | 1 | | | | | |
| 5 | 2213-801-005-00 | HOSE/08X800 | * | 2 | | | | | |
| 6 | 2213-801-007-00 | HOSE/08X530 | * | 3 | | | | | |
| 7 | 2213-801-008-00 | HOSE/08X430 | * | 1 | | | | | |
| 8 | 2132-545-008-00 | WIRE BAND(92) | * | 1 | | | | | |
| 9 | 2213-801-014-00 | NOZZLE/OIL | * | 4 | | | | | |
| 10 | 3632-360-036-00 | JOINTT-TYPE 2 | * | 3 | | | | | |
| 11 | 2186-805-011-00 | BUSH,SEEDLING | * | 4 | | | | | |

# FIG.119 FRAME(TANK/SEEDLING)SYSTEM

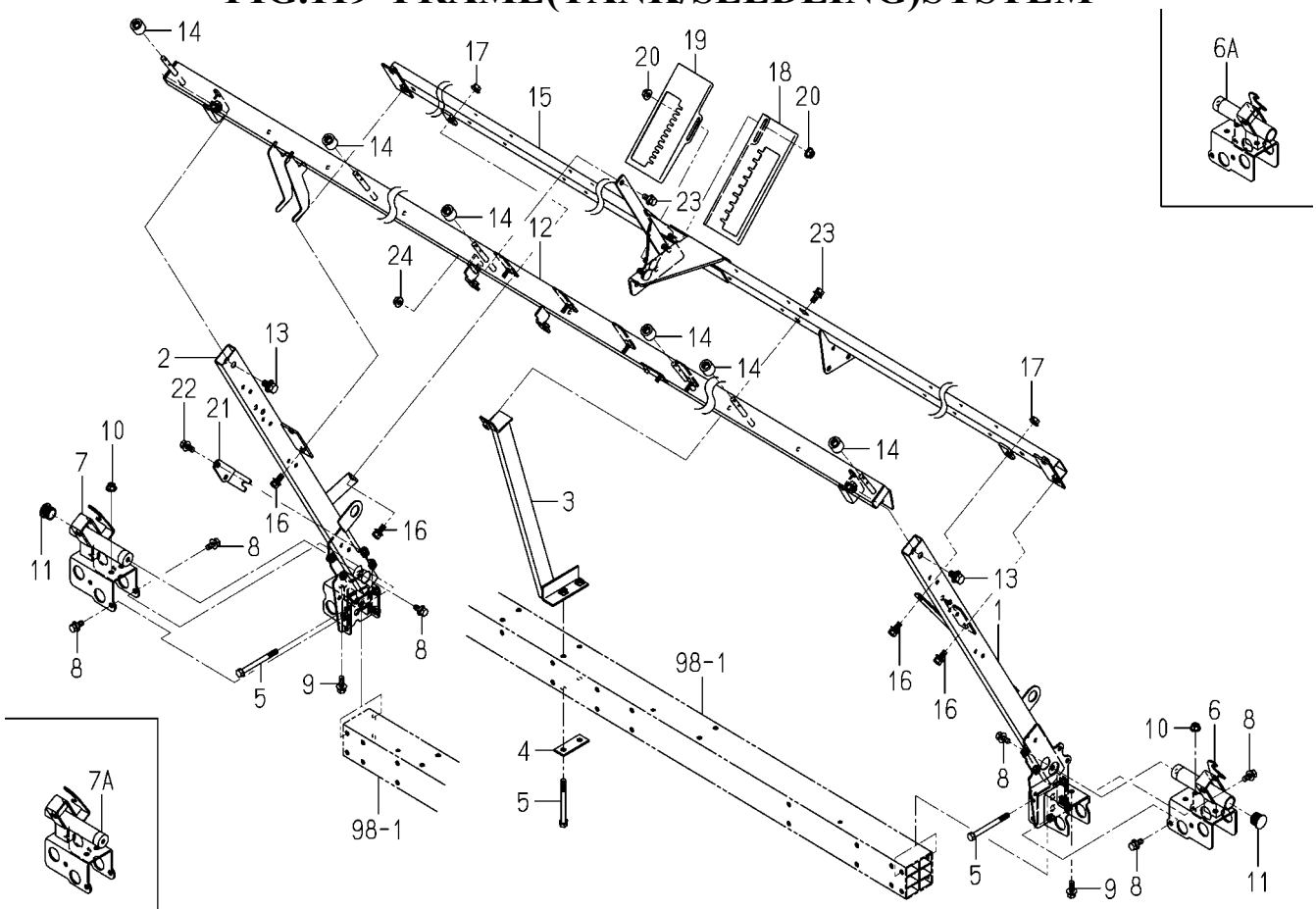


2233-705D-0100

| KEY | PART CODE | DESCRIPTION | SPC | TYPE OF MODEL NP80D E16 | | ITC | COL | GRP | REMARKS |
|---|---|---|---|---|---|---|---|---|---|
| 1 | 2233-705-300-00 | STAY/SEEDLING TANK/E | * | 1 | | | | | |
| 2 | 2233-705-310-00 | STAY/SEEDLING TANK/E | * | 1 | | | | | |
| 3 | 2232-705-250-00 | STAY/SEEDLING TANK/C | * | 1 | | | | | |
| 4 | 2232-603-002-10 | PLATE/I/24X64 | * | 1 | | | | | |
| 5 | 2232-603-003-10 | BOLT/M8X90 | * | 6 | | | | | |
| 6 | 2233-705-280-00 | SYAY/MARKER/8L COMP | * | 1 -80 | | | | | |
| 6A | 2233-705-280-10 | SYAY/MARKER/8L COMP | * | 1 81- | | 1 | | | |
| 7 | 2233-705-290-00 | SYAY/MARKER/8R COMP | * | 1 -80 | | | | | |
| 7A | 2233-705-290-10 | SYAY/MARKER/8R COMP | * | 1 81- | | 1 | | | |
| 8 | V211-360-802-00 | BOLT,SP/M8X20 | * | 6 | | | | | |
| 9 | V211-360-802-50 | BOLT,SP/M8X25 | * | 4 | | | | | |
| 10 | V362-260-008-00 | NUT/WASHER/M8 | * | 4 | | | | | |
| 11 | 2213-516-006-00 | CAP/22X15 | * | 2 | | | | | |
| 12 | 2233-705-220-10 | FRAME/UPPER/8 COMP | * | 1 | | | | | |
| 13 | V211-361-002-00 | BOLT,SP/M10X20 | * | 2 | | | | | |
| 14 | 2130-802-011-10 | ROLLER,SEEDLING TANK | * | 6 | | | | | |
| 15 | 2233-705-600-00 | FRAME/LOWER/8/E16 | * | 1 | | | | | |
| 16 | V211-360-802-00 | BOLT,SP/M8X20 | * | 6 | | | | | |
| 17 | V362-260-008-00 | NUT/WASHER/M8 | * | 2 | | | | | |
| 18 | 2232-705-001-10 | PLATE/GUIDE/DEPTH | * | 1 | | | | | |
| 19 | 2232-705-002-10 | PLATE/GUIDE/PICKING | * | 1 | | | | | |
| 20 | V362-260-008-00 | NUT/WASHER/M8 | * | 4 | | | | | |
| 21 | 2232-705-004-00 | HOLDER/CABLE/SEND | * | 1 | | | | | |
| 22 | V211-360-802-00 | BOLT,SP/M8X20 | * | 2 | | | | | |
| 23 | V211-360-802-00 | BOLT,SP/M8X20 | * | 2 | | | | | |
| 24 | V362-260-008-00 | NUT/WASHER/M8 | * | 1 | | | | | |

# FIG.120 LEVER(PICKING/SEEDLING)SYSTEM

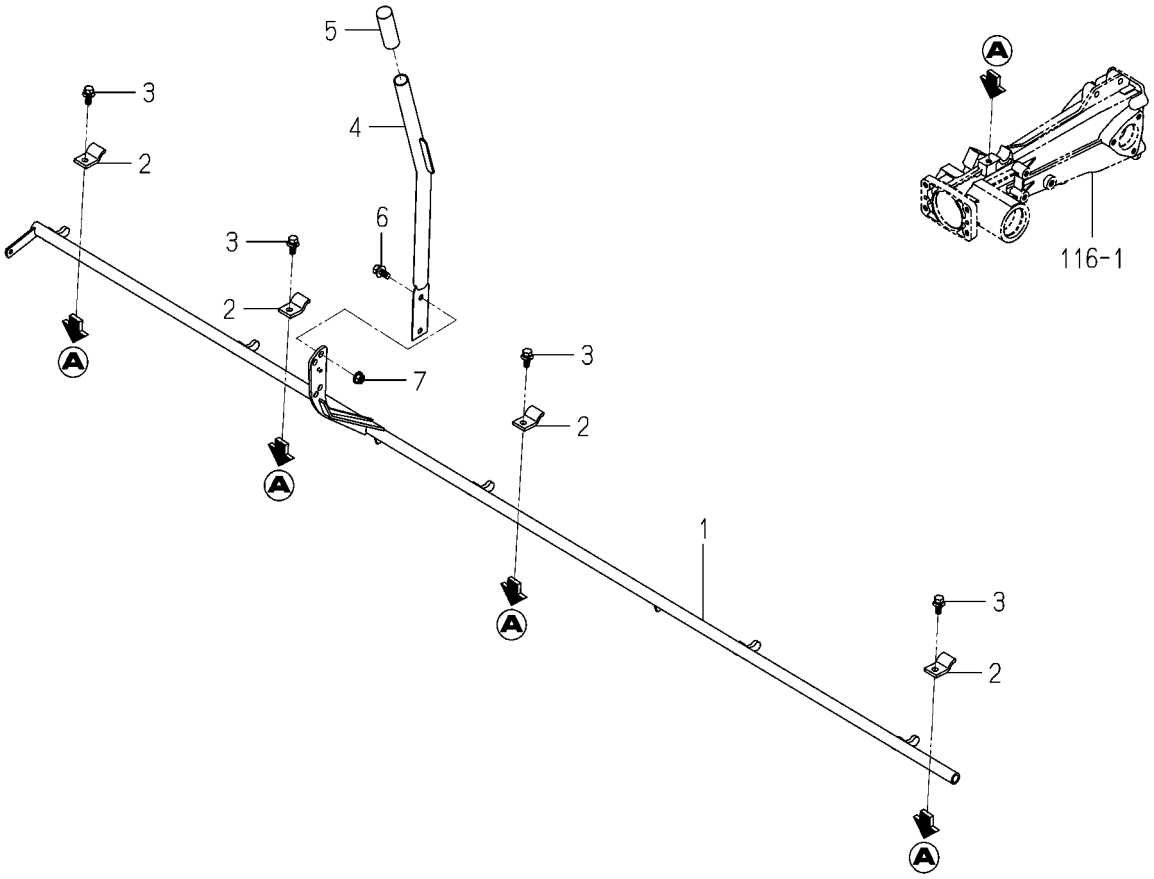


2233-706 -0100

| KEY | PART CODE | DESCRIPTION | SPC | TYPE OF MODEL NP80D E16 | | ITC | COL | GRP | REMARKS |
|---|---|---|---|---|---|---|---|---|---|
| 1 | 2233-706-200-00 | TUBE/SEEDLING PICKIN | * | 1 | | | | | |
| 2 | 2204-706-011-10 | PLATE/HOLDER/PLANTIN | * | 4 | | | | | |
| 3 | V211-360-802-00 | BOLT,SP/M8X20 | * | 4 | | | | | |
| 4 | 2232-706-210-00 | LEVER/PICKING COMP | * | 1 | | | | | |
| 5 | 2183-613-003-00 | GRIP | * | 1 | | | | | |
| 6 | V211-360-802-00 | BOLT,SP/M8X20 | * | 2 | | | | | |
| 7 | V362-260-008-00 | NUT/WASHER/M8 | * | 2 | | | | | |

# FIG.121 FLOAT(SIDE)SYSTEM

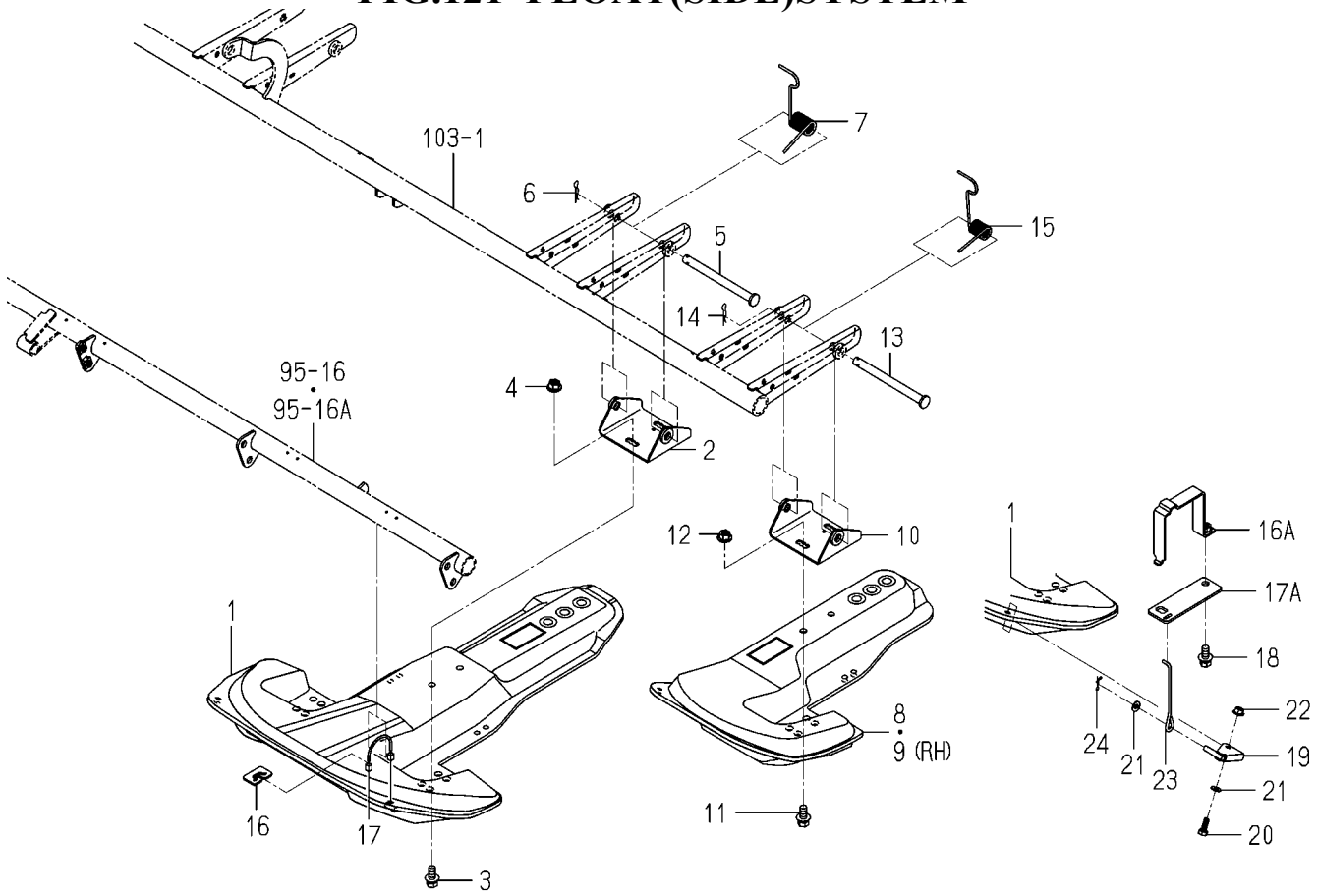


2233-710 -0100

| KEY | PART CODE | DESCRIPTION | SPC | TYPE OF MODEL NP80D E16 | | ITC | COL | GRP | REMARKS |
|---|---|---|---|---|---|---|---|---|---|
| 1 | 2232-710-012-00 | FLOAT/SIDE/NP | * | 2 | | | | | |
| 2 | 2233-710-200-20 | STAY/FLOAT/SIDE/LH | * | 2 | | | | | |
| 3 | V211-360-802-00 | BOLT,SP/M8X20 | * | 4 | | | | | |
| 4 | V362-260-008-00 | NUT/WASHER/M8 | * | 4 | | | | | |
| 5 | 2233-710-002-00 | PIN/10X122 | * | 2 | | | | | |
| 6 | 3505-704-003-00 | PIN,HAIR (10) | * | 2 | | | | | |
| 7 | 2232-710-017-10 | SPRING/HT017/S | * | 2 | | | | | |
| 8 | 2232-710-013-00 | FLOAT/SIDE/LH | * | 1 | | | | | |
| 9 | 2232-710-014-00 | FLOAT/SIDE/RH | * | 1 | | | | | |
| 10 | 2233-710-200-20 | STAY/FLOAT/SIDE/LH | * | 2 | | | | | |
| 11 | V211-360-802-00 | BOLT,SP/M8X20 | * | 4 | | | | | |
| 12 | V362-260-008-00 | NUT/WASHER/M8 | * | 4 | | | | | |
| 13 | 2233-710-002-00 | PIN/10X122 | * | 2 | | | | | |
| 14 | 3505-704-003-00 | PIN,HAIR (10) | * | 2 | | | | | |
| 15 | 2232-710-015-00 | SPRING/HT015/B | * | 2 | | | | | |
| 16 | 2232-710-019-00 | PLATE/HOOK/FLOAT | * | 2 -80 | | | | | |
| 16A | 2232-710-290-00 | HOLDER/STOPPER/FLOAT | * | 2 81- | | | | | |
| 17 | 2232-710-020-10 | CABLE/FLOAT/7 | * | 2 -80 | | | | | |
| 17A | 2232-710-023-00 | PLATE/HOOK | * | 2 81- | | | | | |
| 18 | V211-360-802-00 | BOLT,SP/M8X20 | * | 2 81- | | | | | |
| 19 | 2232-710-280-00 | PLATE/STOPPER/FLOAT | * | 2 81- | | | | | |
| 20 | V200-700-601-60 | BOLT,SUS/M6X16 | * | 2 81- | | | | | |
| 21 | V411-700-006-00 | WASHER,PL/M6 | * | 4 81- | | | | | |
| 22 | 2204-803-068-00 | NUT/WASER/M6/SUS | * | 2 81- | | | | | |
| 23 | 2232-710-022-00 | ROD/STOPPER/FLOAT | * | 2 81- | | | | | |
| 24 | 2161-735-005-00 | PIN | * | 2 81- | | | | | |

# FIG.122 MARKER SYSTEM

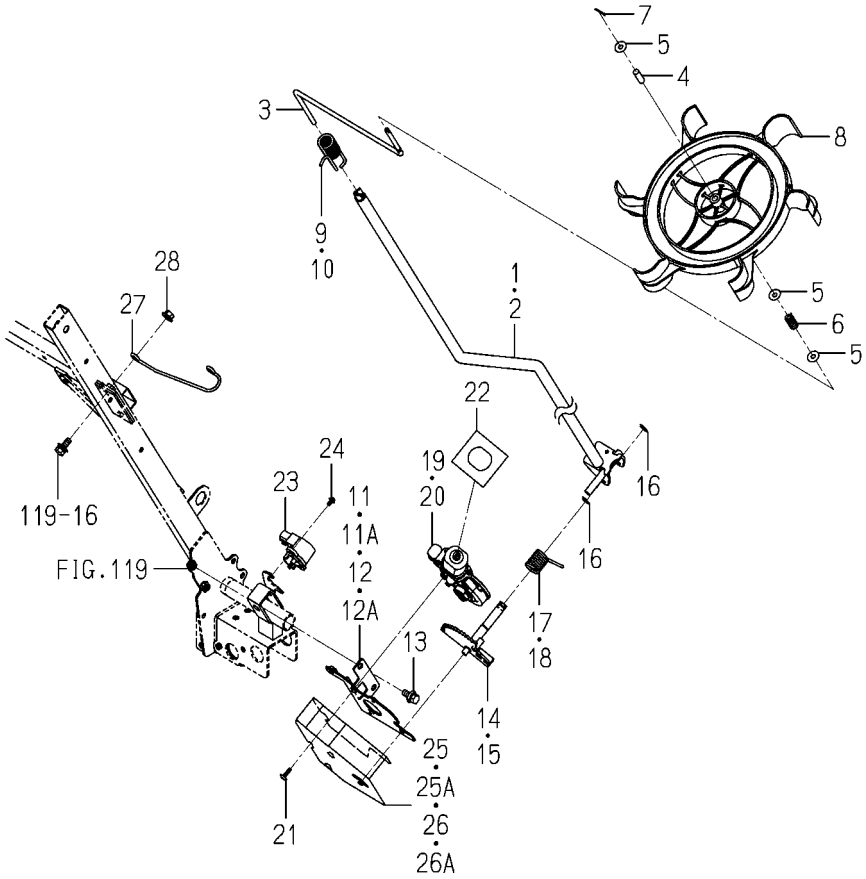


2233-711F-0100

| KEY | PART CODE | DESCRIPTION | SPC | TYPE OF MODEL NP80D | TYPE OF MODEL E16 | ITC | COL | GRP | REMARKS |
|---|---|---|---|---|---|---|---|---|---|
| 1 | 2233-711-200-00 | TUBE/MARKER/8L COMP | * | 1 | | | | | |
| 2 | 2233-711-210-00 | TUBE/MARKER/8R COMP | * | 1 | | | | | |
| 3 | 2232-711-005-00 | ROD/MARKER/WATER WHE | * | 2 | | | | | |
| 4 | 2183-526-001-10 | HUB,MARKER | * | 2 | | | | | |
| 5 | 3560-503-302-00 | WASHER,WIRE TENSION | * | 6 | | | | | |
| 6 | 2186-707-006-00 | SPRING/HC029 | * | 2 | | | | | |
| 7 | 2186-707-001-00 | PIN,COTTER/2.5X15/SU | * | 2 | | | | | |
| 8 | 2232-711-014-00 | LINEMARKER/NP | * | 2 | | | | | |
| 9 | 2232-711-007-00 | SPRING/MARKER/REAR/L | * | 1 | | | | | |
| 10 | 2232-711-008-00 | SPRING/MARKER/REAR/R | * | 1 | | | | | |
| 11 | 2232-711-200-10 | BASE/MARKER/LH COMP | * | 1 -80 | | | | | |
| 11A | 2232-711-200-20 | BASE/MARKER/LH COMP | * | 1 81- | | 1 | | | |
| 12 | 2232-711-210-10 | BASE/MARKER/RH COMP | * | 1 -80 | | | | | |
| 12A | 2232-711-210-20 | BASE/MARKER/RH COMP | * | 1 81- | | 1 | | | |
| 13 | V211-360-802-00 | BOLT,SP/M8X20 | * | 4 | | | | | |
| 14 | 2232-711-220-50 | GEAR/MARKER/LH COMP | * | 1 | | | | | |
| 15 | 2232-711-230-50 | GEAR/MARKER/RH COMP | * | 1 | | | | | |
| 16 | V704-140-012-00 | RING,SNAP/12 C | * | 4 | | | | | |
| 17 | 2232-711-003-10 | SPRING/HT020/LH | * | 1 | | | | | |
| 18 | 2232-711-004-10 | SPRING/HT020/RH | * | 1 | | | | | |
| 19 | 3888-726-200-00 | MOTOR/LH ASSY | * | 1 | | | | | |
| 20 | 2232-711-270-00 | MOTOR/RH ASSY | * | 1 | | | | | |
| 21 | 3888-218-001-00 | TAPPINGSCREW/M5X16 | * | 6 | | | | | |
| 22 | 2232-711-011-00 | COVER/MOTOR | * | 2 | | | | | |
| 23 | 1729-662-340-00 | SENSOR/ANGLE/110/R | * | 2 | | | | | |
| 24 | V120-364-001-00 | SCREW,SP/M4X10 | * | 4 | | | | | |
| 25 | 2232-711-001-00 | COVER/MARKER/LH | * | 1 -80 | | | 5N | | |
| 25A | 2232-711-001-10 | COVER/MARKER/LH | * | 1 81- | | 1 | 5N | | |
| 26 | 2232-711-002-00 | COVER/MARKER/RH | * | 1 -80 | | | 5N | | |
| 26A | 2232-711-002-10 | COVER/MARKER/RH | * | 1 81- | | 1 | 5N | | |

# FIG.122 MARKER SYSTEM

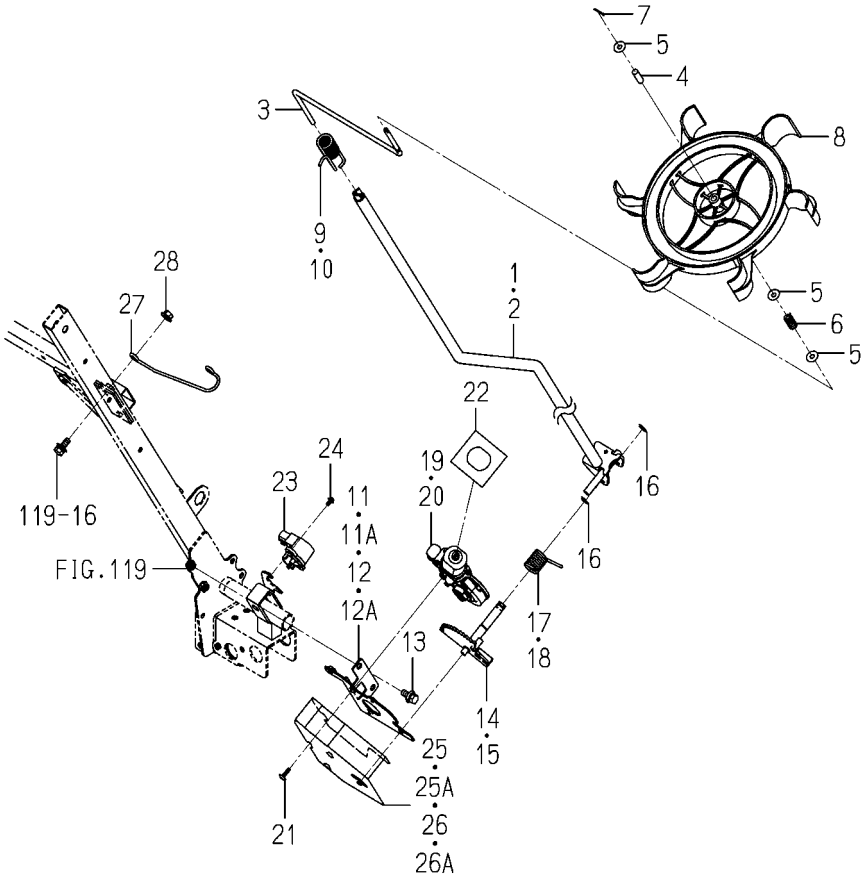


2233-711F-0100

| KEY | PART CODE | DESCRIPTION | SPC | TYPE OF MODEL NP80D | TYPE OF MODEL E16 | ITC | COL | GRP | REMARKS |
|---|---|---|---|---|---|---|---|---|---|
| 27 | 2232-711-013-00 | HOOK/MARKER | * | 2 | | | | | |
| 28 | V362-260-008-00 | NUT/WASHER/M8 | * | 2 | | | | | |

# FIG.123 GUARD(PLATE/FRONT)SYSTEM

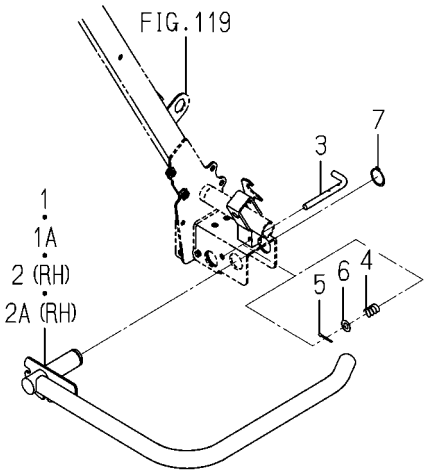


2233-713 -0100

| KEY | PART CODE | DESCRIPTION | SPC | TYPE OF MODEL NP80D E16 | | ITC | COL | GRP | REMARKS |
|---|---|---|---|---|---|---|---|---|---|
| 1 | 2233-713-200-10 | GUARD/RAIL/8/LH COMP | * | 1 -80 | | | | | |
| 1A | 2233-713-260-00 | GUARD/RAIL/8L/SCOMP | * | 1 81- | | | | | |
| 2 | 2233-713-210-10 | GUARD/RAIL/8/RH COMP | * | 1 -80 | | | | | |
| 2A | 2233-713-270-00 | GUARD/RAIL/8R/SCOMP | * | 1 81- | | | | | |
| 3 | 2232-713-002-00 | PIN/LOCK/STAND | * | 2 | | | | | |
| 4 | 2190-805-012-00 | SPRING,HC030 | * | 2 | | | | | |
| 5 | V500-163-002-00 | PIN,SPLIT/3X20 | * | 2 | | | | | |
| 6 | V411-260-008-00 | WASHER,PL/M8 | * | 2 | | | | | |
| 7 | V704-140-025-00 | RING,SNAP/25 C | * | 2 | | | | | |

# FIG.124 PLANTER(LH)SYSTEM

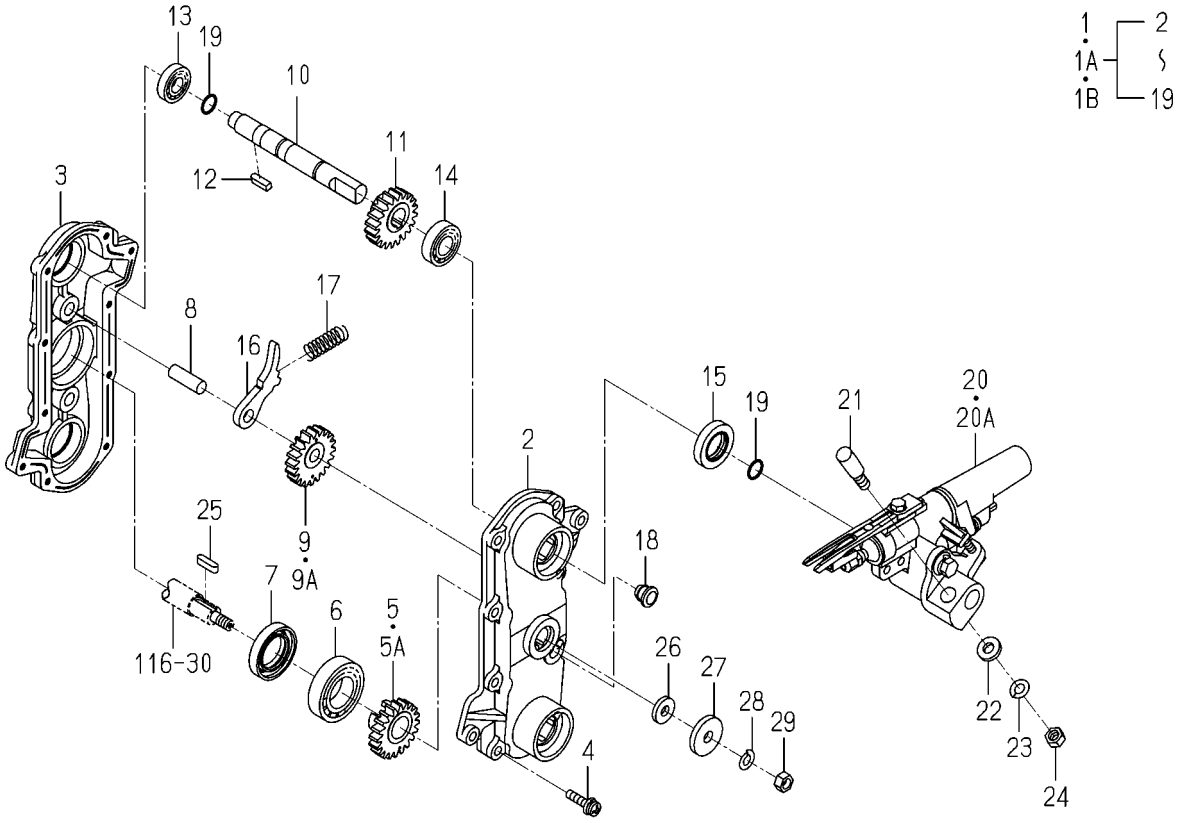


2213-738K-0100

| KEY | PART CODE | DESCRIPTION | SPC | TYPE OF MODEL NP80D E16 | | ITC | COL | GRP | REMARKS |
|---|---|---|---|---|---|---|---|---|---|
| 1 | 2204-738-440-60 | ROTARY PLANTING/K/LH | * | 4 -107 | | | | | |
| 1A | 2204-738-440-70 | ROTARY PLANTING/K/LH | * | 4 -150 | | 1 | | | |
| 1B | 2204-738-440-80 | ROTARY PLANTING/K/LH | * | 4 151- | | 1 | | | |
| 2 | 2204-738-340-10 | CASE/ROTARY/OUT/LH | * | 4 | | | | | |
| 3 | 2204-738-282-20 | CASE/ROTARY/IN/LH | * | 4 | | | | | |
| 4 | V120-366-002-50 | SCREW,SP/M6X25 | * | 40 | | | | | |
| 5 | 2204-738-273-00 | GEAR,SUN/LH | * | 4 -150 | | | | | |
| 5A | 2204-738-283-00 | GEAR/SUN/LH/E | * | 4 151- | | | | | |
| 6 | V600-110-600-50 | BEARING,RB/6005 | * | 4 | | | | | |
| 7 | 2142-736-224-00 | SEAL,OIL | * | 4 | | | | | |
| 8 | 2142-736-214-00 | PIN,COUNTER,GEAR | * | 8 | | | | | |
| 9 | 2204-738-274-00 | GEAR,COUNTER | * | 8 -150 | | | | | |
| 9A | 2204-738-284-00 | GEAR/COUNTER/E | * | 8 151- | | | | | |
| 10 | 2204-738-275-20 | SHAFT/PLANTING ARM/L | * | 8 | | | | | |
| 11 | 2204-738-277-00 | GEAR/LH | * | 8 | | | | | |
| 12 | 2142-736-271-00 | KEY,05X05X18 PLUS | * | 8 | | | | | |
| 13 | V600-110-620-10 | BEARING,RB/6201 | * | 8 | | | | | |
| 14 | V600-110-600-20 | BEARING,RB/6002 | * | 8 | | | | | |
| 15 | 2144-738-216-00 | SEAL,OIL | * | 8 | | | | | |
| 16 | 2161-738-611-00 | ARM LH | * | 8 | | | | | |
| 17 | 2142-736-221-00 | SPRING/HC037 | * | 8 | | | | | |
| 18 | 2186-738-038-20 | CAP/10 | * | 4 | | | | | |
| 19 | 2161-738-008-00 | O-RING/OR | * | 16 | | | | | |
| 20 | 2204-738-450-20 | PLANTINGARM/K/L ASSY | * | 8 -107 | | | | | FIG 154 |
| 20A | 2204-738-450-30 | PLANTINGARM/K/L ASSY | * | 8 108- | | 1 | | | FIG 154 |
| 21 | 2204-738-313-00 | PIN/LOCKED | * | 8 | | | | | |
| 22 | 2204-738-323-00 | WASHER/09X18X03 | * | 8 | | | | | |
| 23 | V401-700-008-00 | WASHER,SP/M8 | * | 8 | | | | | |
| 24 | V304-700-008-00 | NUT,SUS/M8 | * | 8 | | | | | |
| 25 | 3750-231-013-00 | KEY,SPROCKET | * | 4 | | | | | |

# FIG.124 PLANTER(LH)SYSTEM

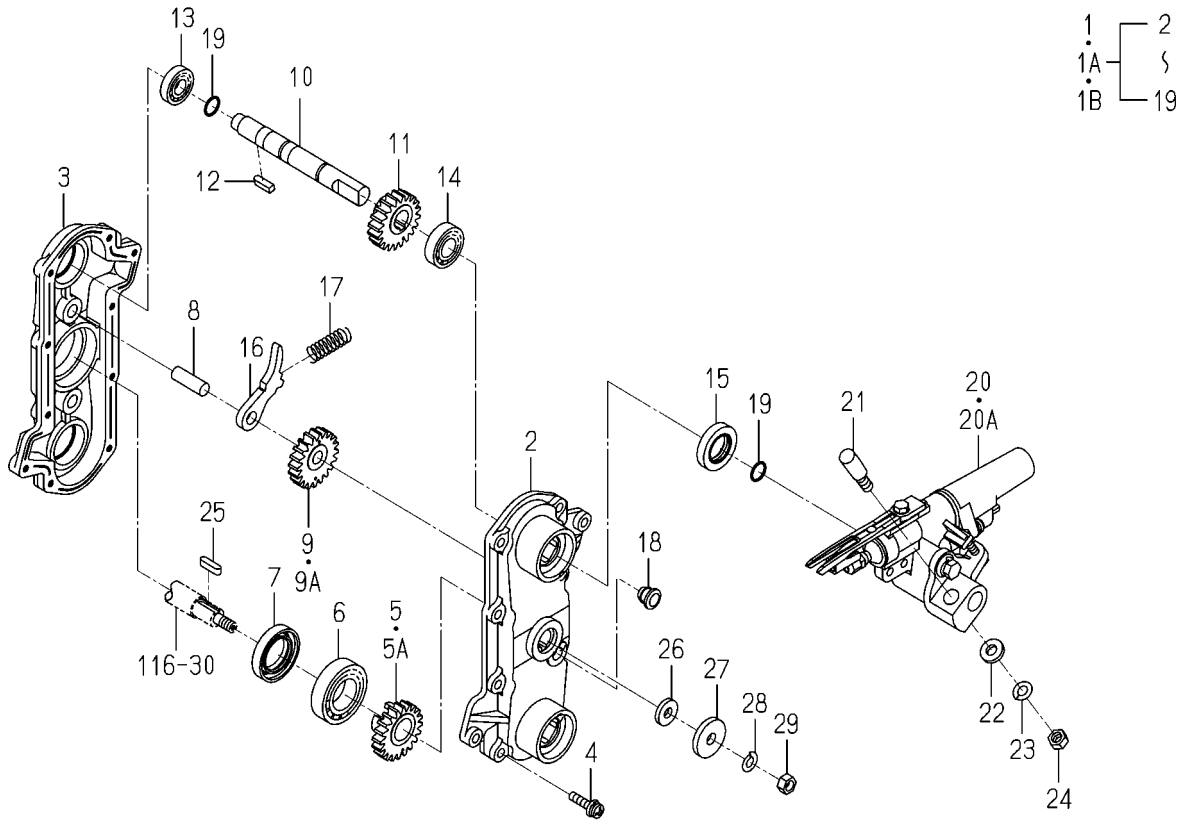


2213-738K-0100

| KEY | PART CODE | DESCRIPTION | SPC | TYPE OF MODEL NP80D E16 | | ITC | COL | GRP | REMARKS |
|---|---|---|---|---|---|---|---|---|---|
| 26 | 2142-736-203-10 | PACKING | * | 4 | | | | | |
| 27 | 2132-161-005-00 | WASHER,PULLEY | * | 4 | | | | | |
| 28 | V401-160-008-00 | WASHER,SP/M8 | * | 4 | | | | | |
| 29 | V304-460-008-00 | NUT/M8/7T | * | 4 | | | | | |

# FIG.125 PLANTER(RH)SYSTEM

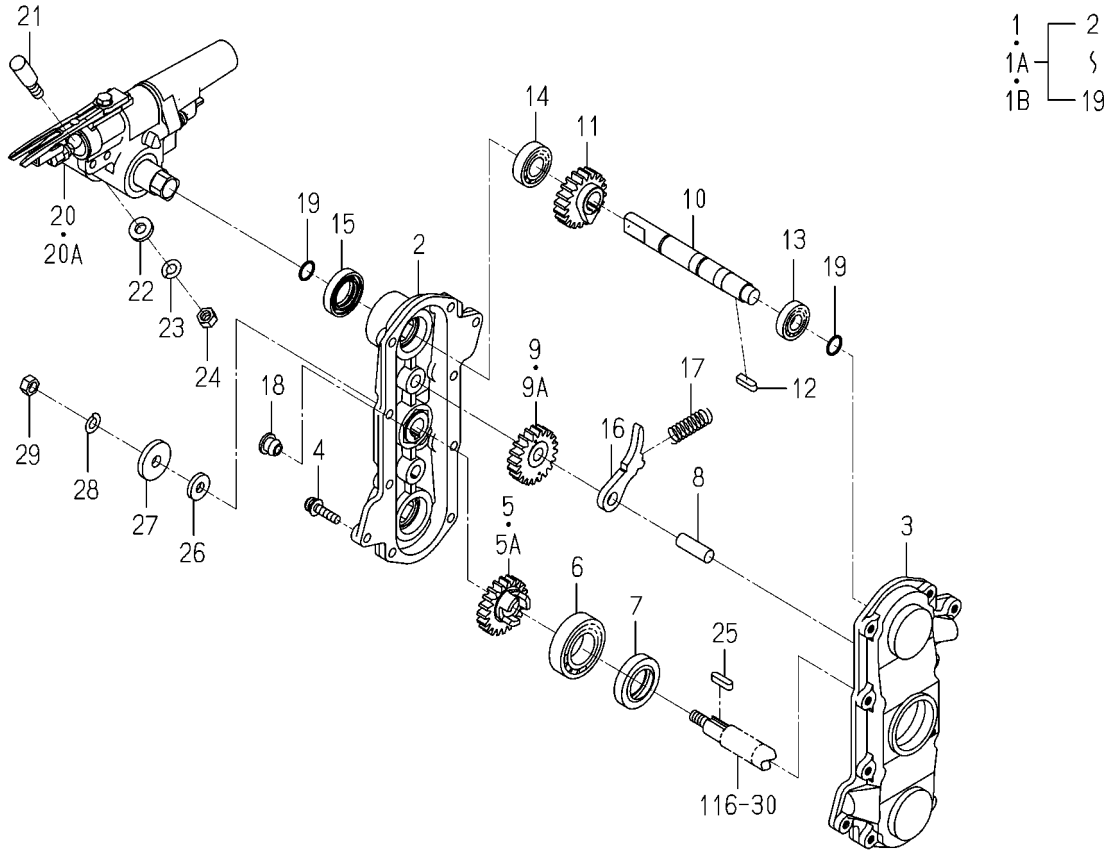


2213-739K-0100

| KEY | PART CODE | DESCRIPTION | SPC | TYPE OF MODEL NP80D E16 | | ITC | COL | GRP | REMARKS |
|---|---|---|---|---|---|---|---|---|---|
| 1 | 2204-739-440-60 | ROTARY PLANTING/K/RH | * | 4 -107 | | | | | |
| 1A | 2204-739-440-70 | ROTARY PLANTING/K/RH | * | 4 -150 | | 1 | | | |
| 1B | 2204-739-440-80 | ROTARY PLANTING/K/RH | * | 4 151- | | 1 | | | |
| 2 | 2204-739-340-10 | CASE/ROTARY/OUT/RH | * | 4 | | | | | |
| 3 | 2204-739-282-20 | CASE/ROTARY/IN/RH | * | 4 | | | | | |
| 4 | V120-366-002-50 | SCREW,SP/M6X25 | * | 40 | | | | | |
| 5 | 2204-739-273-00 | GEAR/SUN/RH | * | 4 -150 | | | | | |
| 5A | 2204-739-283-00 | GEAR/SUN/RH/E | * | 4 151- | | | | | |
| 6 | V600-110-600-50 | BEARING,RB/6005 | * | 4 | | | | | |
| 7 | 2142-736-224-00 | SEAL,OIL | * | 4 | | | | | |
| 8 | 2142-736-214-00 | PIN,COUNTER,GEAR | * | 8 | | | | | |
| 9 | 2204-738-274-00 | GEAR,COUNTER | * | 8 -150 | | | | | |
| 9A | 2204-738-284-00 | GEAR/COUNTER/E | * | 8 151- | | | | | |
| 10 | 2204-739-275-20 | SHAFT/PLANTING ARM/R | * | 8 | | | | | |
| 11 | 2204-739-277-00 | GEAR/RH | * | 8 | | | | | |
| 12 | 2142-736-271-00 | KEY,05X05X18 PLUS | * | 8 | | | | | |
| 13 | V600-110-620-10 | BEARING,RB/6201 | * | 8 | | | | | |
| 14 | V600-110-600-20 | BEARING,RB/6002 | * | 8 | | | | | |
| 15 | 2144-738-216-00 | SEAL,OIL | * | 8 | | | | | |
| 16 | 2161-739-611-00 | ARM RH | * | 8 | | | | | |
| 17 | 2142-736-221-00 | SPRING/HC037 | * | 8 | | | | | |
| 18 | 2186-738-038-20 | CAP/10 | * | 4 | | | | | |
| 19 | 2161-738-008-00 | O-RING/OR | * | 16 | | | | | |
| 20 | 2204-739-450-20 | PLANTINGARM/K/R ASSY | * | 8 -107 | | | | | FIG 155 |
| 20A | 2204-739-450-30 | PLANTINGARM/K/R ASSY | * | 8 108- | | 1 | | | FIG 155 |
| 21 | 2204-738-313-00 | PIN/LOCKED | * | 8 | | | | | |
| 22 | 2204-738-323-00 | WASHER/09X18X03 | * | 8 | | | | | |
| 23 | V401-700-008-00 | WASHER,SP/M8 | * | 8 | | | | | |
| 24 | V304-700-008-00 | NUT,SUS/M8 | * | 8 | | | | | |
| 25 | 3750-231-013-00 | KEY,SPROCKET | * | 4 | | | | | |

# FIG.125 PLANTER(RH)SYSTEM

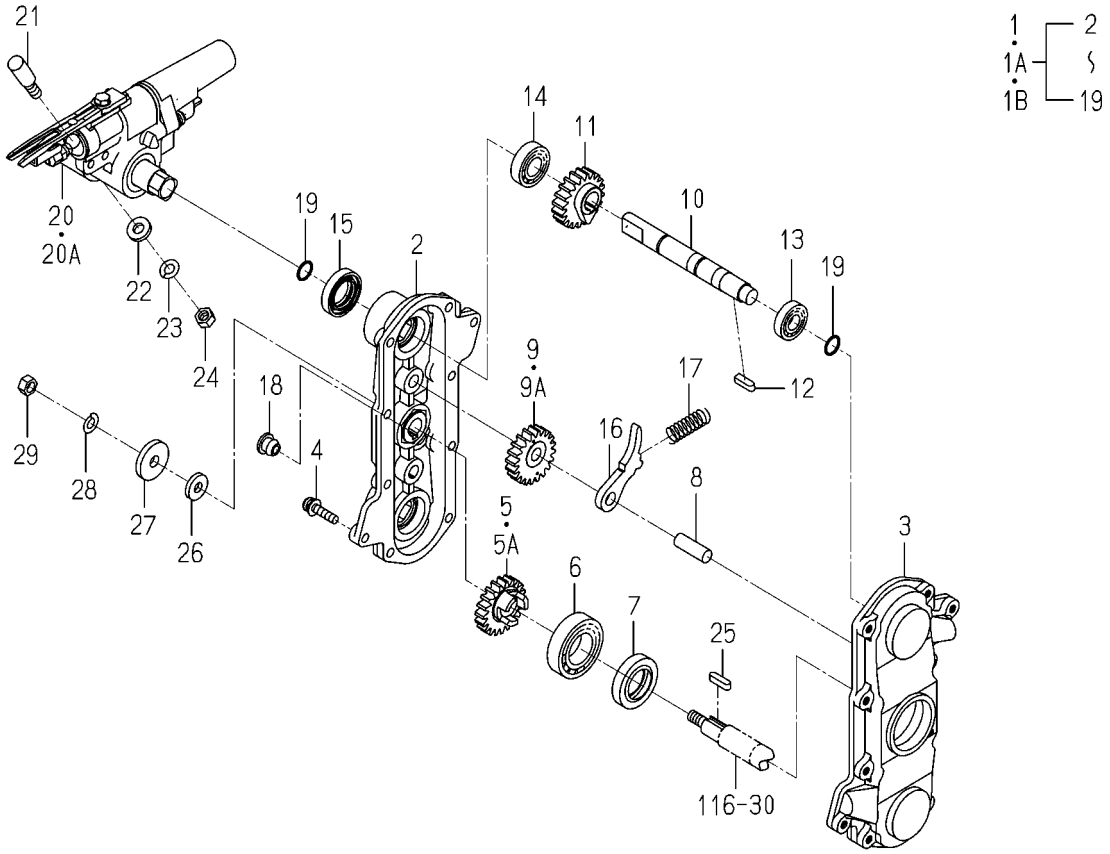


2213-739K-0100

| KEY | PART CODE | DESCRIPTION | SPC | TYPE OF MODEL NP80D E16 | | ITC | COL | GRP | REMARKS |
|---|---|---|---|---|---|---|---|---|---|
| 26 | 2142-736-203-10 | PACKING | * | 4 | | | | | |
| 27 | 2132-161-005-00 | WASHER,PULLEY | * | 4 | | | | | |
| 28 | V401-160-008-00 | WASHER,SP/M8 | * | 4 | | | | | |
| 29 | V304-460-008-00 | NUT/M8/7T | * | 4 | | | | | |

# FIG.126 TANK(SEEDLING)SYSTEM

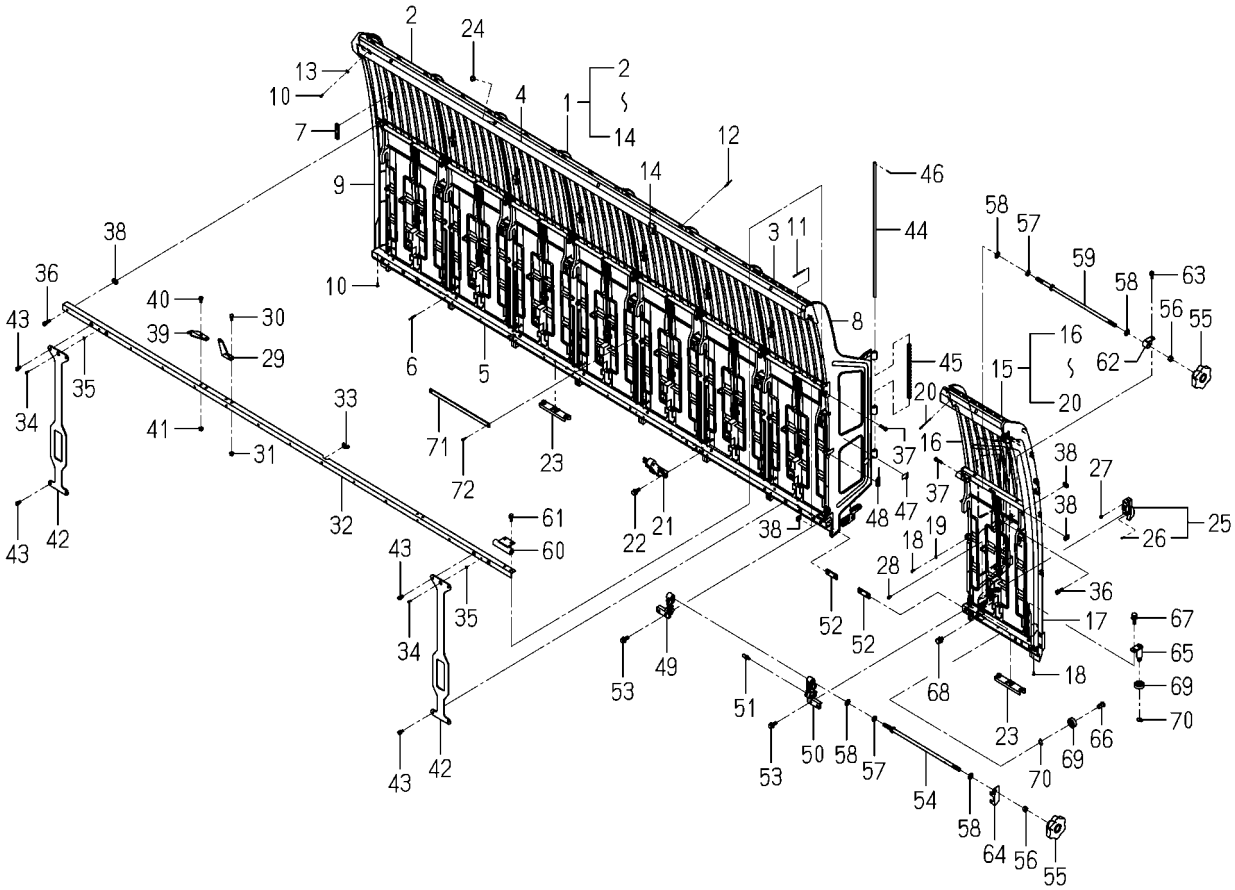

2233-801E-0100

| KEY | PART CODE | DESCRIPTION | SPC | TYPE OF MODEL NP80D E16 | | ITC | COL | GRP | REMARKS |
|---|---|---|---|---|---|---|---|---|---|
| 1 | 2233-801-300-00 | SEEDLING TANK/CENTER | * | 1 | | | | | |
| 2 | 2161-831-231-30 | SEEDLINGTANK | * | 6 | | | | | |
| 3 | 2162-831-401-30 | SEEDLINGTANK/LH | * | 1 | | | | | |
| 4 | 2233-801-301-00 | RAIL/SEEDLINNG UPPER | * | 1 | | | | | |
| 5 | 2233-801-210-00 | RAIL/LOWER/8 COMP | * | 1 | | | | | |
| 6 | 2130-802-208-00 | RIVET,POP | * | 37 | | | | | |
| 7 | 2161-834-004-00 | PLATE | * | 14 | | | | | |
| 8 | 2232-801-430-00 | FENCE/LH/SUB COMP | * | 1 | | | | | |
| 9 | 2186-801-702-00 | COVER,SEEDING TANK/M | * | 1 | | | | | |
| 10 | 2161-831-211-00 | PIN, TAPPING | * | 3 | | | | | |
| 11 | 2172-831-005-00 | RIVET/STEM/3.2X | * | 7 | | | | | |
| 12 | 2161-831-209-00 | B-RIVET/ALMI | * | 21 | | | | | |
| 13 | V411-260-004-00 | WASHER,PL/M4 | * | 2 | | | | | |
| 14 | 2232-801-220-00 | SENSOR/STOP SWITCH | * | 1 | | | | | |
| 15 | 2233-801-350-00 | SEEDLING TANK/LH/E12 | * | 1 | | | | | |
| 16 | 2232-801-460-00 | FENCE/OUTER/LH COMP | * | 1 | | | | | |
| 17 | 2232-801-451-00 | COVER/SEEDLING TANK/ | * | 1 | | | | | |
| 18 | 2161-831-211-00 | PIN, TAPPING | * | 4 | | | | | |
| 19 | V411-260-004-00 | WASHER,PL/M4 | * | 3 | | | | | |
| 20 | 2172-831-005-00 | RIVET/STEM/3.2X | * | 4 | | | | | |
| 21 | 2232-801-001-00 | ARM/SEEDLINGTANK | * | 1 | | | | | |
| 22 | V211-360-802-50 | BOLT,SP/M8X25 | * | 2 | | | | | |
| 23 | 2161-831-003-10 | SLIDER PLATE(E12) | * | 5 | | | | | |
| 24 | 2186-738-038-20 | CAP/10 | * | 6 | | | | | |
| 25 | 2132-801-220-10 | SWITCH ASSY | * | 8 | | | | | |
| 26 | V195-102-504-40 | SCREW/TAPPING | * | 8 | | | | | |
| 27 | V120-364-000-80 | SCREW,SP/M4X8 | * | 8 | | | | | |
| 28 | V120-364-001-20 | SCREW,SP/M4X12 | * | 8 | | | | | |
| 29 | 2232-801-006-00 | PLATE/HOOK/SEEDLING | * | 2 | | | | | |
| 30 | V210-260-601-60 | BOLT,S/M6X16 | * | 4 | | | | | |

# FIG.126 TANK(SEEDLING)SYSTEM

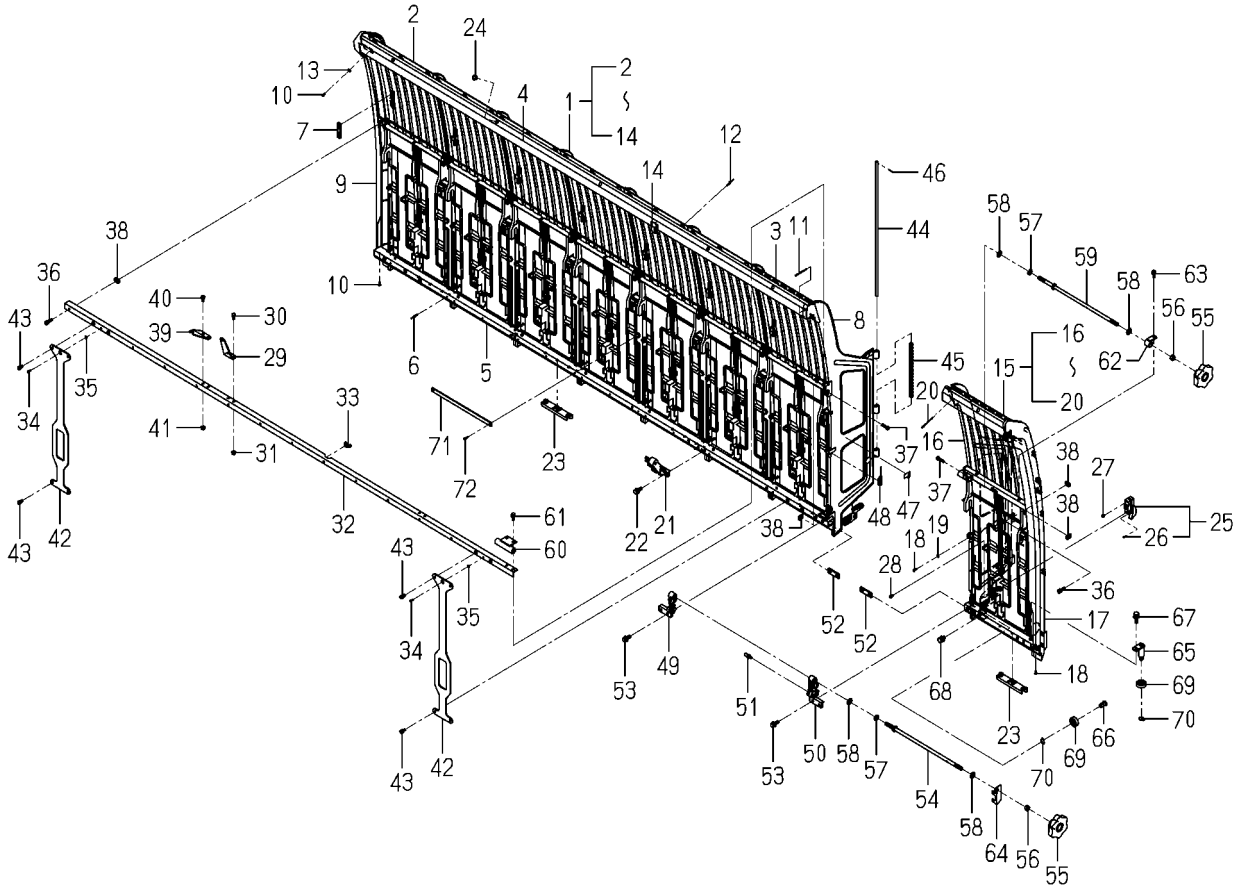

2233-801E-0100

| KEY | PART CODE | DESCRIPTION | SPC | TYPE OF MODEL NP80D E16 | | ITC | COL | GRP | REMARKS |
|---|---|---|---|---|---|---|---|---|---|
| 31 | V360-260-006-00 | NUT/WASHER/M6 | * | 4 | | | | | |
| 32 | 2233-801-220-00 | RAIL/SEEDLING TANK/I | * | 1 | | | | | |
| 33 | 2186-801-001-00 | GROMMET/20/SEEDING T | * | 1 | | | | | |
| 34 | 2161-831-211-00 | PIN, TAPPING | * | 7 | | | | | |
| 35 | V411-260-004-00 | WASHER,PL/M4 | * | 7 | | | | | |
| 36 | V210-360-602-50 | BOLT,SP/M6X25 | * | 8 | | | | | |
| 37 | V200-260-602-50 | BOLT/M6X25 | * | 2 | | | | | |
| 38 | 2161-831-007-00 | PLATE | * | 10 | | | | | |
| 39 | 2232-801-005-00 | PLATE/SEEDLING FEED | * | 1 | | | | | |
| 40 | V210-260-601-60 | BOLT,S/M6X16 | * | 2 | | | | | |
| 41 | V360-260-006-00 | NUT/WASHER/M6 | * | 2 | | | | | |
| 42 | 2232-801-014-00 | PLATE/REINFORCEMENT/ | * | 2 | | | | | |
| 43 | V210-260-601-60 | BOLT,S/M6X16 | * | 8 | | | | | |
| 44 | 2232-801-015-00 | PIN/SEEDLING TANK SW | * | 1 | | | | | |
| 45 | 2232-801-034-10 | SPRING/HC210 | * | 1 | | | | | |
| 46 | V500-162-501-50 | PIN,SPLIT/2.5X15 | * | 2 | | | | | |
| 47 | 1426-621-038-00 | CLAMP,HARNESS | * | 4 | | | | | |
| 48 | 2132-545-008-00 | WIRE BAND(92) | * | 2 | | | | | |
| 49 | 2232-801-031-00 | ARM/SWIVEL/INSIDE/LH | * | 1 | | | | | |
| 50 | 2232-801-032-00 | ARM/SWIVEL/OUTSIDE/L | * | 1 | | | | | |
| 51 | 2162-831-033-00 | PIN,KNOCKED | * | 1 | | | | | |
| 52 | 2162-831-003-00 | PLATE,RAIL/OUTER | * | 2 | | | | | |
| 53 | V211-360-802-50 | BOLT,SP/M8X25 | * | 4 | | | | | |
| 54 | 2232-801-480-20 | BOLT/HANDLE/LOWER | * | 1 | | | | | |
| 55 | 2213-801-016-00 | KNOB/HANDLE | * | 2 | | | | | |
| 56 | V304-260-010-00 | NUT/M10 | * | 2 | | | | | |
| 57 | V401-160-010-00 | WASHER,SP/M10 | * | 2 | | | | | |
| 58 | V410-260-010-00 | WASHER,PL/M10 | * | 4 | | | | | |
| 59 | 2162-831-350-00 | ROD,JOINT/ARM | * | 1 | | | | | |
| 60 | 2162-831-250-00 | NUT, HOLDER | * | 1 | | | | | |

# FIG.126 TANK(SEEDLING)SYSTEM

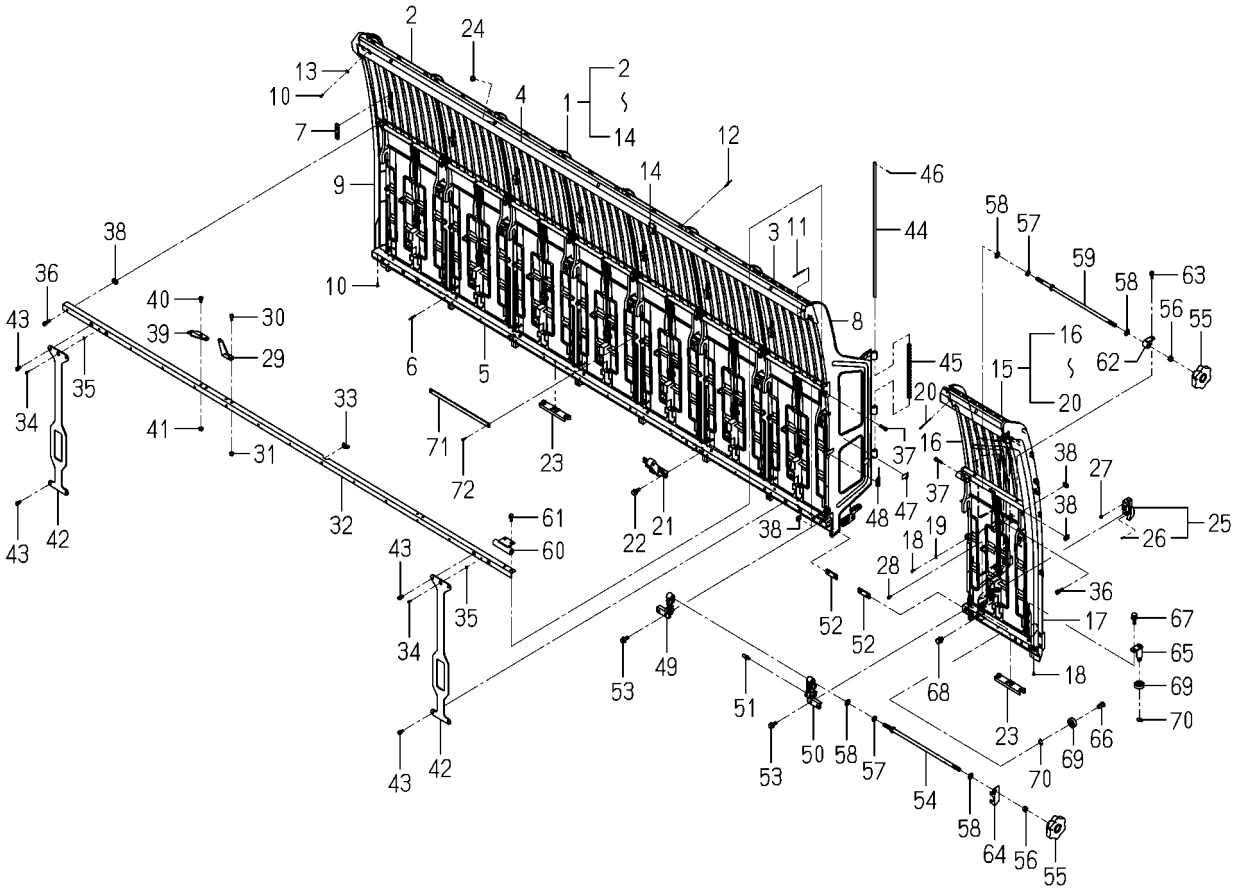


2233-801E-0100

| KEY | PART CODE | DESCRIPTION | SPC | TYPE OF MODEL NP80D E16 | | ITC | COL | GRP | REMARKS |
|---|---|---|---|---|---|---|---|---|---|
| 61 | V210-360-602-00 | BOLT,SP/M6X20 | * | 2 | | | | | |
| 62 | 2162-831-370-00 | PLATE,STOPPER | * | 1 | | | | | |
| 63 | V210-360-602-00 | BOLT,SP/M6X20 | * | 1 | | | | | |
| 64 | 2232-801-033-00 | HOLDER/BOLTHANDOLE | * | 1 | | | | | |
| 65 | 2162-831-360-00 | PIN,RAIL/LOWER/OUTER | * | 1 | | | | | |
| 66 | 2162-831-032-00 | PIN/BEARING/FRONT PL | * | 1 | | | | | |
| 67 | V210-360-602-00 | BOLT,SP/M6X20 | * | 1 | | | | | |
| 68 | V210-360-601-20 | BOLT,SP/M6X12 | * | 1 | | | | | |
| 69 | V600-150-600-00 | BEARING,RB/6000SS | * | 2 | | | | | |
| 70 | V704-140-010-00 | RING,SNAP/10 C | * | 2 | | | | | |
| 71 | 2186-805-026-00 | PLATE/1R/13X280 | * | 8 | | | | | |
| 72 | V195-164-016-10 | SCREW/TAPPING | * | 16 | | | | | |

# FIG.127 LAMP(TURN SIGNAL)SYSTEM

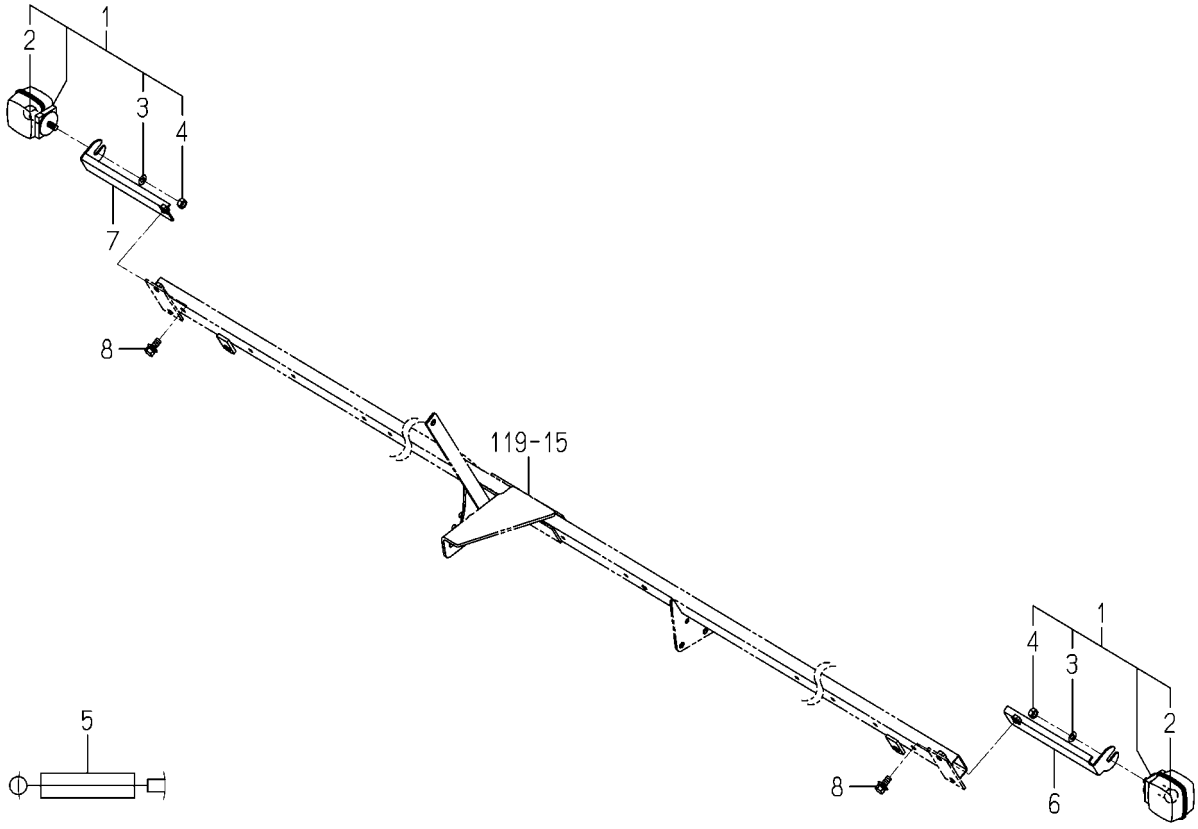


2233-802 -0100

| KEY | PART CODE | DESCRIPTION | SPC | TYPE OF MODEL NP80D | E16 | ITC | COL | GRP | REMARKS |
|---|---|---|---|---|---|---|---|---|---|
| 1 | 2132-544-200-10 | LAMP/TURNSIGNAL ASSY | * | 2 | | | | | |
| 2 | 1444-621-242-00 | BULB/12V 20W | * | 2 | | | | | |
| 3 | V401-160-008-00 | WASHER,SP/M8 | * | 2 | | | | | |
| 4 | V304-260-008-00 | NUT/M8 | * | 2 | | | | | |
| 5 | 2186-802-051-00 | HARNESS,WINKER WIRE/ | * | 2 | | | | | |
| 6 | 2232-802-500-00 | STAY/WINKER/LH COMP | * | 1 | | | | | |
| 7 | 2232-802-510-00 | STAY/UINKER/RH COMP | * | 1 | | | | | |
| 8 | V211-360-802-00 | BOLT,SP/M8X20 | * | 2 | | | | | |

# FIG.128 REFLECTOR SYSTEM

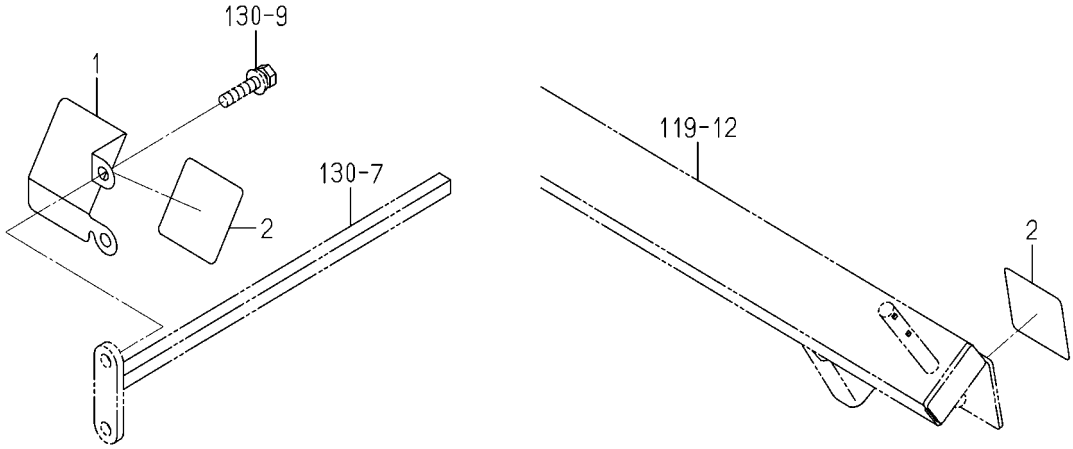


2232-802A-0100

| KEY | PART CODE | DESCRIPTION | SPC | TYPE OF MODEL NP80D E16 | | ITC | COL | GRP | REMARKS |
|---|---|---|---|---|---|---|---|---|---|
| 1 | 2232-802-002-00 | PLATE/REFLECTOR/RH | * | 1 | | | | | |
| 2 | 2194-901-016-00 | LABEL/FRASH | * | 2 | | | | | |

# FIG.129 PLATE(FRONT)SYSTEM

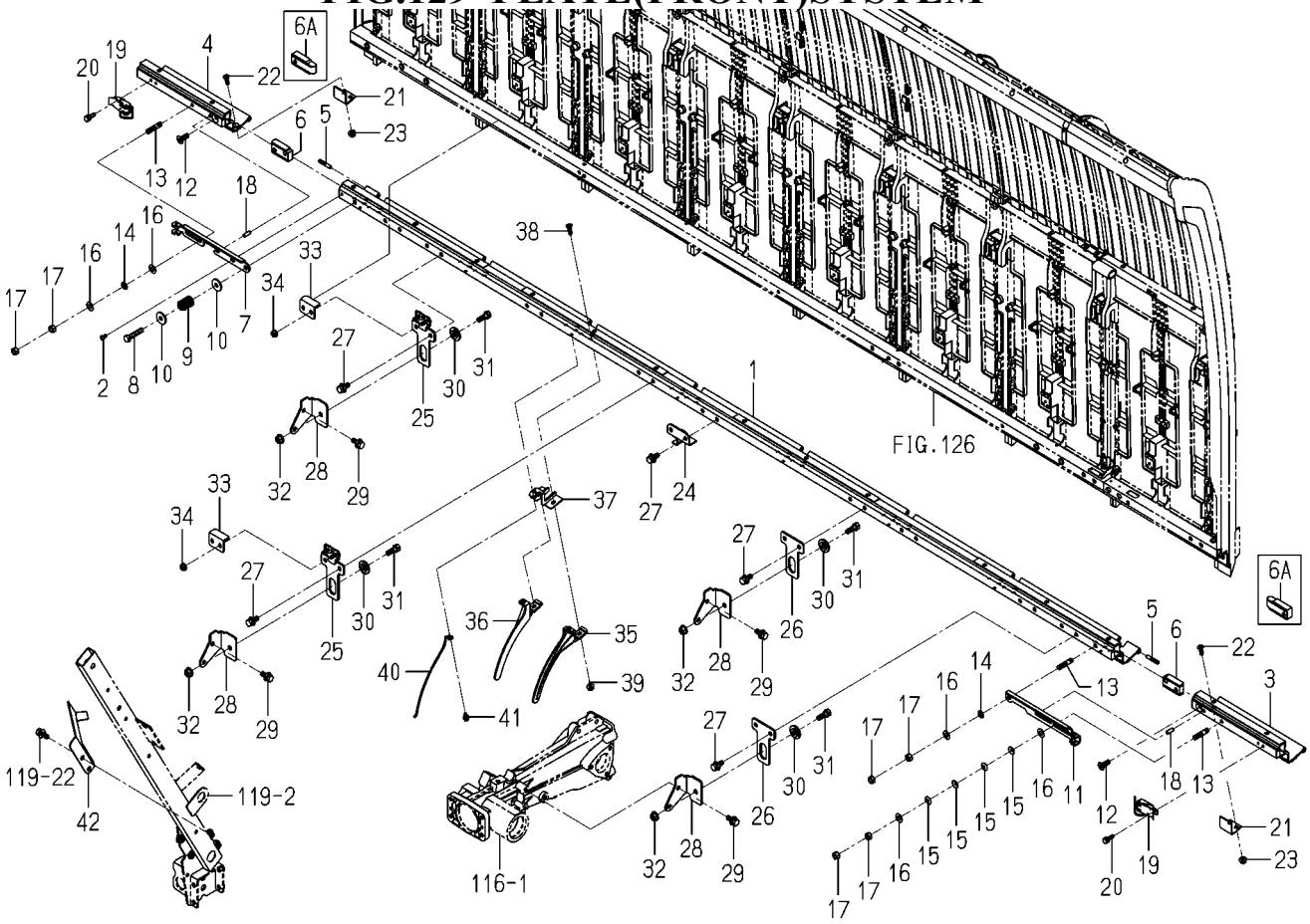


2233-803B-0100

| KEY | PART CODE | DESCRIPTION | SPC | TYPE OF MODEL NP80D E16 | | ITC | COL | GRP | REMARKS |
|---|---|---|---|---|---|---|---|---|---|
| 1 | 2233-803-400-00 | RAIL_NAE_TANK/CENTER | * | 1 | | | | | |
| 2 | V120-265-001-00 | SCREW,SEMS/M5X10 | * | 1 | | | | | |
| 3 | 2213-803-210-10 | FRONT PLATE/SIDE/LH | * | 1 | | | | | |
| 4 | 2213-803-230-10 | FRONT PLATE/SIDE/RH | * | 1 | | | | | |
| 5 | 2162-833-001-00 | PLATE | * | 2 | | | | | |
| 6 | 2233-803-023-00 | JOINT/RAILL/NP8 | * | 2 -175 | | | | | |
| 6A | 2233-803-023-10 | JOINT/RAILL/NP8 | * | 2 176- | | 1 | | | |
| 7 | 2233-803-021-10 | PLATE/RAIL/8RH | * | 1 | | | | | |
| 8 | V201-260-804-00 | BOLT/M8X40 | * | 1 | | | | | |
| 9 | 2186-528-004-00 | SPRING | * | 1 | | | | | |
| 10 | 3560-201-015-00 | WASHER,BINDING SHAFT | * | 2 | | | | | |
| 11 | 2213-803-007-10 | PLATE/RAIL/8LH | * | 1 | | | | | |
| 12 | V112-168-002-00 | SCREW,FLAT/M8X20 | * | 2 | | | | | |
| 13 | V251-260-802-50 | STUD/M8X25 | * | 3 | | | | | |
| 14 | 3533-306-001-00 | SPAC/M8 | * | 2 | | | | | |
| 15 | 3560-203-004-00 | SPRING,CONE | * | 4 | | | | | |
| 16 | V411-260-008-00 | WASHER,PL/M8 | * | 5 | | | | | |
| 17 | V304-460-008-00 | NUT/M8/7T | * | 6 | | | | | |
| 18 | V522-100-601-60 | PIN,ST,A/6X16 | * | 2 | | | | | |
| 19 | 2157-508-230-00 | CLAMP | * | 2 | | | | | |
| 20 | V210-260-602-00 | BOLT,S/M6X20 | * | 4 | | | | | |
| 21 | 2162-833-051-00 | PLATE,CONNECTING | * | 2 | | | | | |
| 22 | V112-706-002-00 | SCREW,FLAT/M6X20 | * | 2 | | | | | |
| 23 | 2204-803-068-00 | NUT/WASER/M6/SUS | * | 2 | | | | | |
| 24 | 2232-803-220-00 | STAY/RAIL COMP | * | 5 | | | | | |
| 25 | 2232-803-210-00 | PLATE/SLIDER/HOOK | * | 2 | | | | | |
| 26 | 2232-803-003-00 | PLATE/SLIDER | * | 2 | | | | | |
| 27 | V211-360-802-00 | BOLT,SP/M8X20 | * | 18 | | | | | |
| 28 | 2232-803-001-00 | STAY/SLIDER/OUTER | * | 4 | | | | | |
| 29 | V211-360-802-00 | BOLT,SP/M8X20 | * | 8 | | | | | |

# FIG.129 PLATE(FRONT)SYSTEM

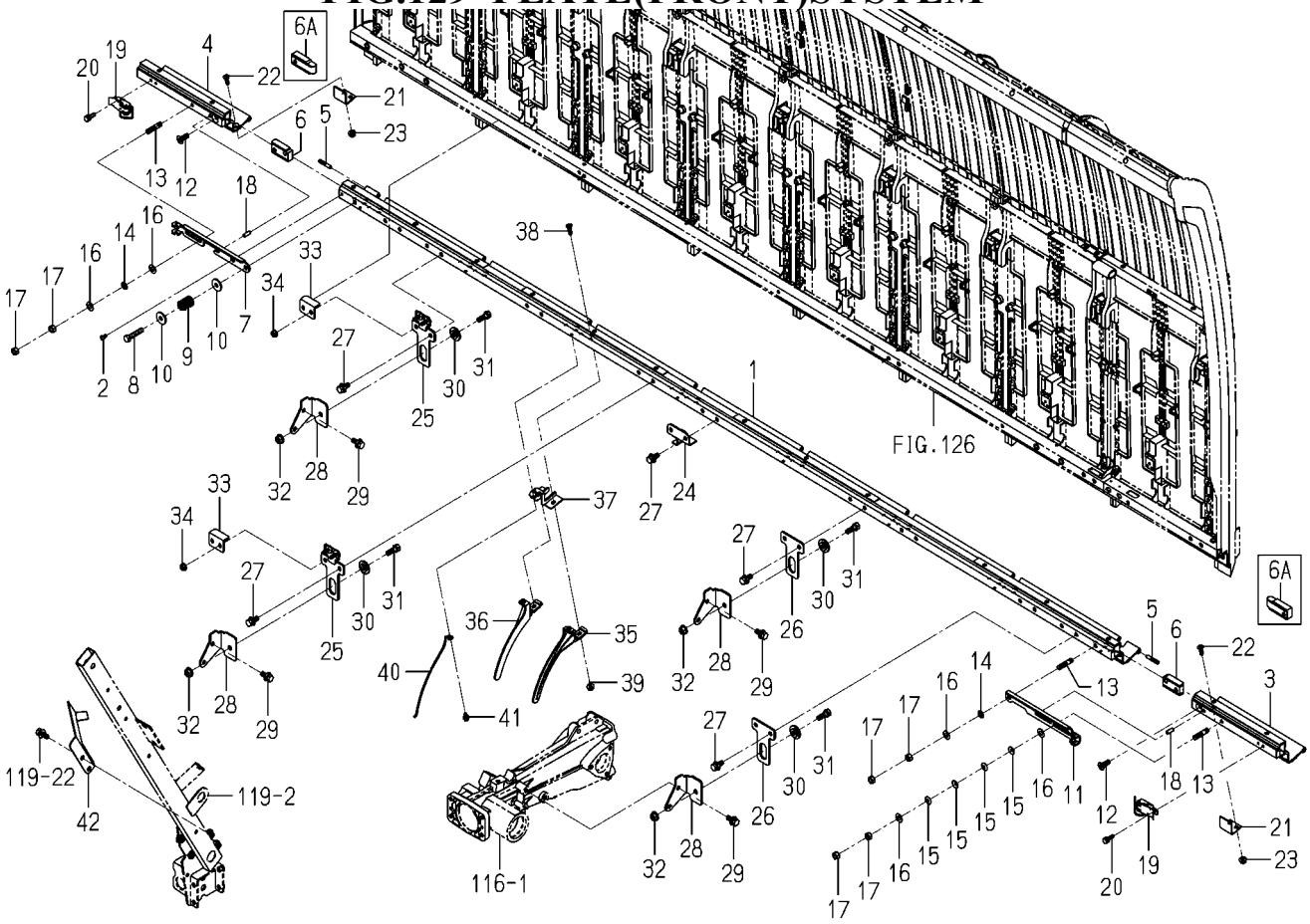


2233-803B-0100

| KEY | PART CODE | DESCRIPTION | SPC | TYPE OF MODEL NP80D E16 | | ITC | COL | GRP | REMARKS |
|---|---|---|---|---|---|---|---|---|---|
| 30 | 2139-807-005-00 | COLLAR SLIDE METAL | * | 4 | | | | | |
| 31 | V211-260-802-50 | BOLT,S/M8X25 | * | 4 | | | | | |
| 32 | V362-260-008-00 | NUT/WASHER/M8 | * | 4 | | | | | |
| 33 | 2213-803-009-10 | PLATE/STOPPER/TANK/8 | * | 2 | | | | | |
| 34 | V360-260-006-00 | NUT/WASHER/M6 | * | 4 | | | | | |
| 35 | 2204-803-015-20 | GUIDE/SEEDLING/LH/PZ | * | 8 | | | | | |
| 36 | 2204-803-016-20 | GUIDE/SEEDLING/RH/PZ | * | 8 | | | | | |
| 37 | 2204-803-350-00 | PLATE/GUIDE/E16 COMP | * | 8 | | | | | |
| 38 | V112-706-002-00 | SCREW,FLAT/M6X20 | * | 16 | | | | | |
| 39 | 2204-803-068-00 | NUT/WASER/M6/SUS | * | 16 | | | | | |
| 40 | 2204-803-025-00 | WIRE,SEEDING GUIDE/P | * | 8 | | | | | |
| 41 | 2204-803-024-00 | BOLT/M5X12/SP/STAINL | * | 8 | | | | | |
| 42 | 2233-803-007-10 | PLATE/STOPPER/RAIL | * | 1 | | | | | |

# FIG.130 HOLDER(SEEDLING)SYSTEM(1/2)

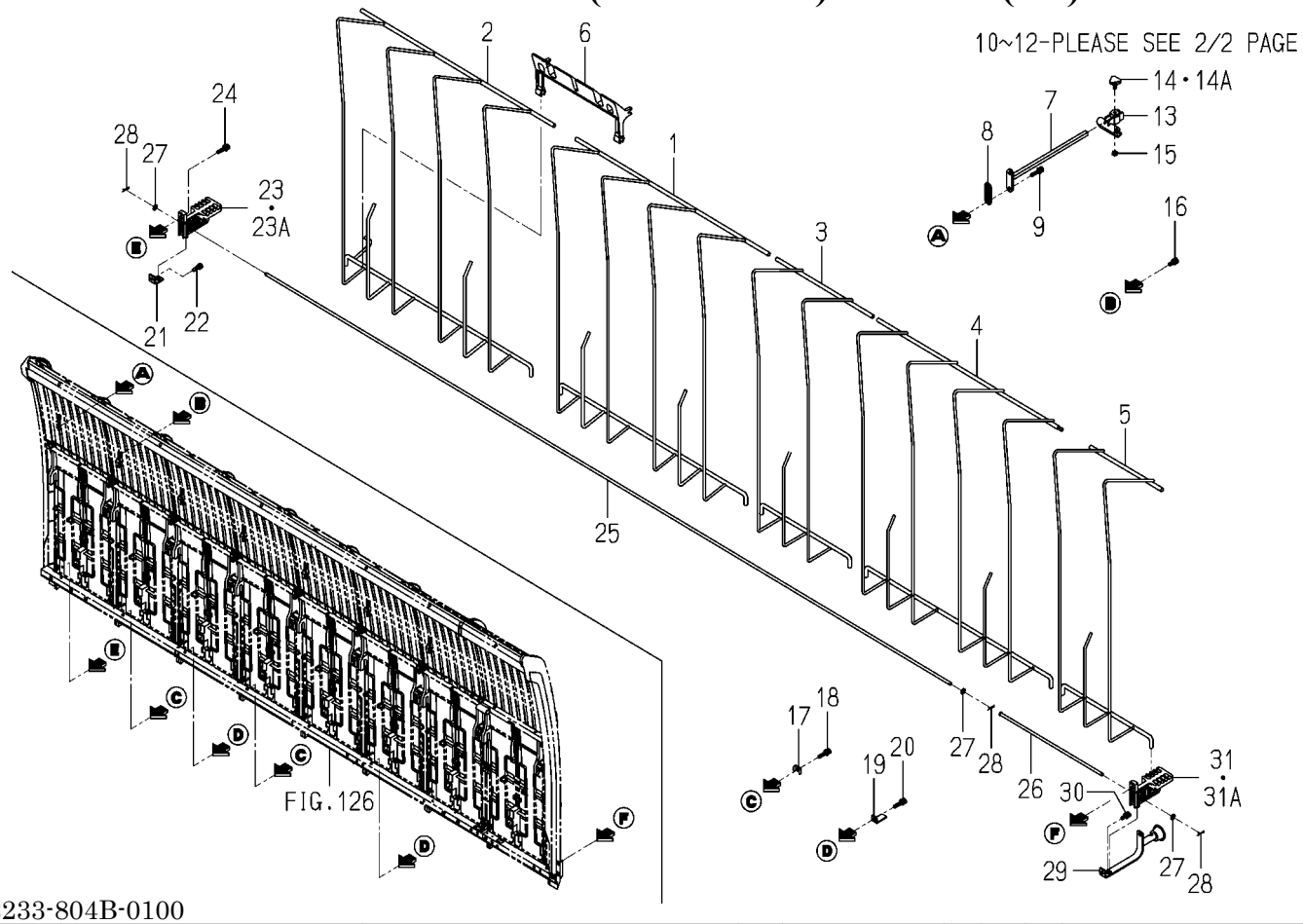


2233-804B-0100

| KEY | PART CODE | DESCRIPTION | SPC | TYPE OF MODEL NP80D | TYPE OF MODEL E16 | ITC | COL | GRP | REMARKS |
|---|---|---|---|---|---|---|---|---|---|
| 1 | 2186-804-300-00 | STAY,6/M COMP | * | 1 | | | | | |
| 2 | 2204-804-400-00 | FRAME/6/PZ | * | 1 | | | | | |
| 3 | 2186-834-210-10 | SEEDLING HOLDER/5/PG | * | 1 | | | | | |
| 4 | 2232-804-200-10 | SEEDLING HOLDER/2LIN | * | 1 | | | | | |
| 5 | 2232-804-300-00 | SEEDLING HOLDER/1LIN | * | 1 | | | | | |
| 6 | 2188-804-004-00 | STOPPER,SEED/6/K | * | 1 | | | | | |
| 7 | 2232-804-400-00 | HOLDER/SEEDLING HOLD | * | 4 | | | | | |
| 8 | 2213-804-007-00 | SPACER/OUTER/RH | * | 4 | | | | | |
| 9 | V210-360-603-00 | BOLT,SP/M6X30 | * | 8 | | | | | |
| 10 | 2232-804-450-00 | HOLDER/SEEDLING HOLD | * | 1 | | | | | |
| 11 | 2232-804-460-00 | HOLDER/SEEDLING HOLD | * | 1 | | | | | |
| 12 | V360-260-006-00 | NUT/WASHER/M6 | * | 4 | | | | | |
| 13 | 2232-804-001-00 | HOLDER/SEEDLING HOLD | * | 7 | | | | | |
| 14 | 1716-601-003-00 | BOLT/KNOB/M06X13 | * | 7 -80 | | | | | |
| 14A | 1716-601-003-10 | BOLT/KNOB/M06X13 | * | 7 81- | | 1 | | | |
| 15 | V301-260-006-00 | NUT/M6 | * | 7 | | | | | |
| 16 | V210-360-602-00 | BOLT,SP/M6X20 | * | 4 | | | | | |
| 17 | 2204-831-001-00 | PLATE/SEEDLINGTANK | * | 2 | | | | | |
| 18 | V210-360-603-00 | BOLT,SP/M6X30 | * | 2 | | | | | |
| 19 | 2232-804-002-00 | PLATE/L/12X30 | * | 3 | | | | | |
| 20 | V210-260-603-00 | BOLT,S/M6X30 | * | 3 | | | | | |
| 21 | 2161-834-007-00 | PLATE | * | 4 | | | | | |
| 22 | V210-360-602-00 | BOLT,SP/M6X20 | * | 4 | | | | | |
| 23 | 2161-834-001-40 | HOLDER/RESISTANTBAR | * | 4 -80 | | | | | |
| 23A | 2161-834-001-50 | HOLDER/RESISTANTBAR | * | 4 81- | | 1 | | | |
| 24 | V210-360-603-00 | BOLT,SP/M6X30 | * | 4 | | | | | |
| 25 | 2233-804-002-00 | SHAFT/RESISTANCE/8/C | * | 1 | | | | | |
| 26 | 2190-804-002-00 | PIN/83E16 | * | 1 | | | | | |
| 27 | V411-260-006-00 | WASHER,PL/M6 | * | 3 | | | | | |
| 28 | 2130-601-018-00 | PIN,SNAP/6 | * | 3 | | | | | |

# FIG.130 HOLDER(SEEDLING)SYSTEM(2/2)

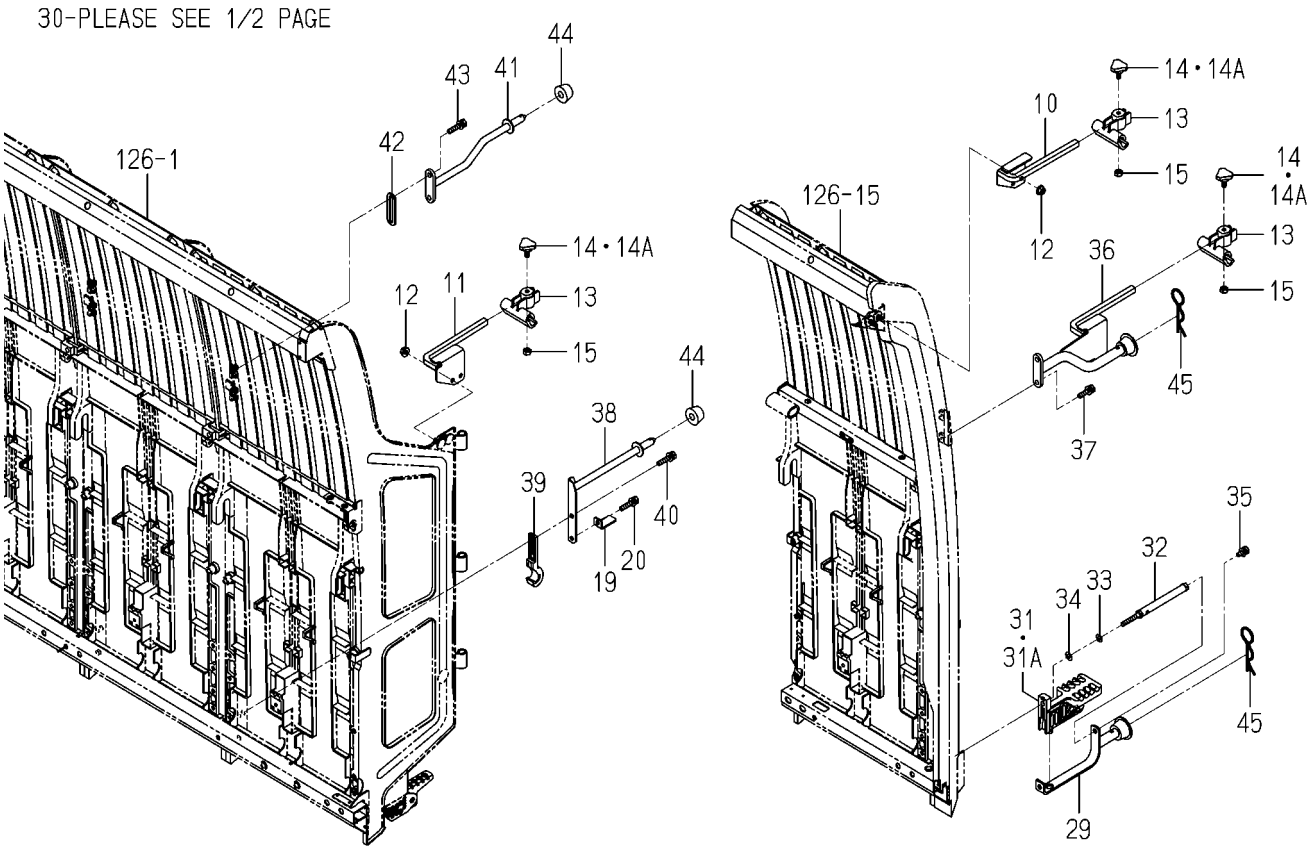


2233-804B-0100

| KEY | PART CODE | DESCRIPTION | SPC | TYPE OF MODEL NP80D | E16 | ITC | COL | GRP | REMARKS |
|---|---|---|---|---|---|---|---|---|---|
| 29 | 2232-804-470-10 | HOLDER/SWIVEL/OUTSID | * | 1 | | | | | |
| 30 | V210-360-602-00 | BOLT,SP/M6X20 | * | 1 | | | | | |
| 31 | 2161-834-001-40 | HOLDER/RESISTANTBAR | * | 1 -80 | | | | | |
| 31A | 2161-834-001-50 | HOLDER/RESISTANTBAR | * | 1 81- | | 1 | | | |
| 32 | 2232-804-480-10 | STAY/SEEDLING HOLDER | * | 1 | | | | | |
| 33 | V401-160-006-00 | WASHER,SP/M6 | * | 1 | | | | | |
| 34 | V411-260-006-00 | WASHER,PL/M6 | * | 1 | | | | | |
| 35 | V210-360-601-60 | BOLT,SP/M6X16 | * | 1 | | | | | |
| 36 | 2232-804-420-00 | HOLDER/SWIVEL/OUTSID | * | 1 | | | | | |
| 37 | V210-360-602-50 | BOLT,SP/M6X25 | * | 2 | | | | | |
| 38 | 2232-804-440-20 | HOLDER/SWIVEL/INSIDE | * | 1 | | | | | |
| 39 | 2161-834-005-20 | HOLDER | * | 1 | | | | | |
| 40 | V210-360-603-00 | BOLT,SP/M6X30 | * | 1 | | | | | |
| 41 | 2232-804-430-00 | HOLDER/SWIVEL/INSIDE | * | 1 | | | | | |
| 42 | 2213-804-007-00 | SPACER/OUTER/RH | * | 1 | | | | | |
| 43 | V210-360-603-00 | BOLT,SP/M6X30 | * | 2 | | | | | |
| 44 | 2162-804-005-00 | CUSHION | * | 2 | | | | | |
| 45 | 1416-509-007-00 | PIN,HAIR/19 | * | 2 | | | | | |

# FIG.131 FEED(SEEDLING)SYSTEM(1/2)

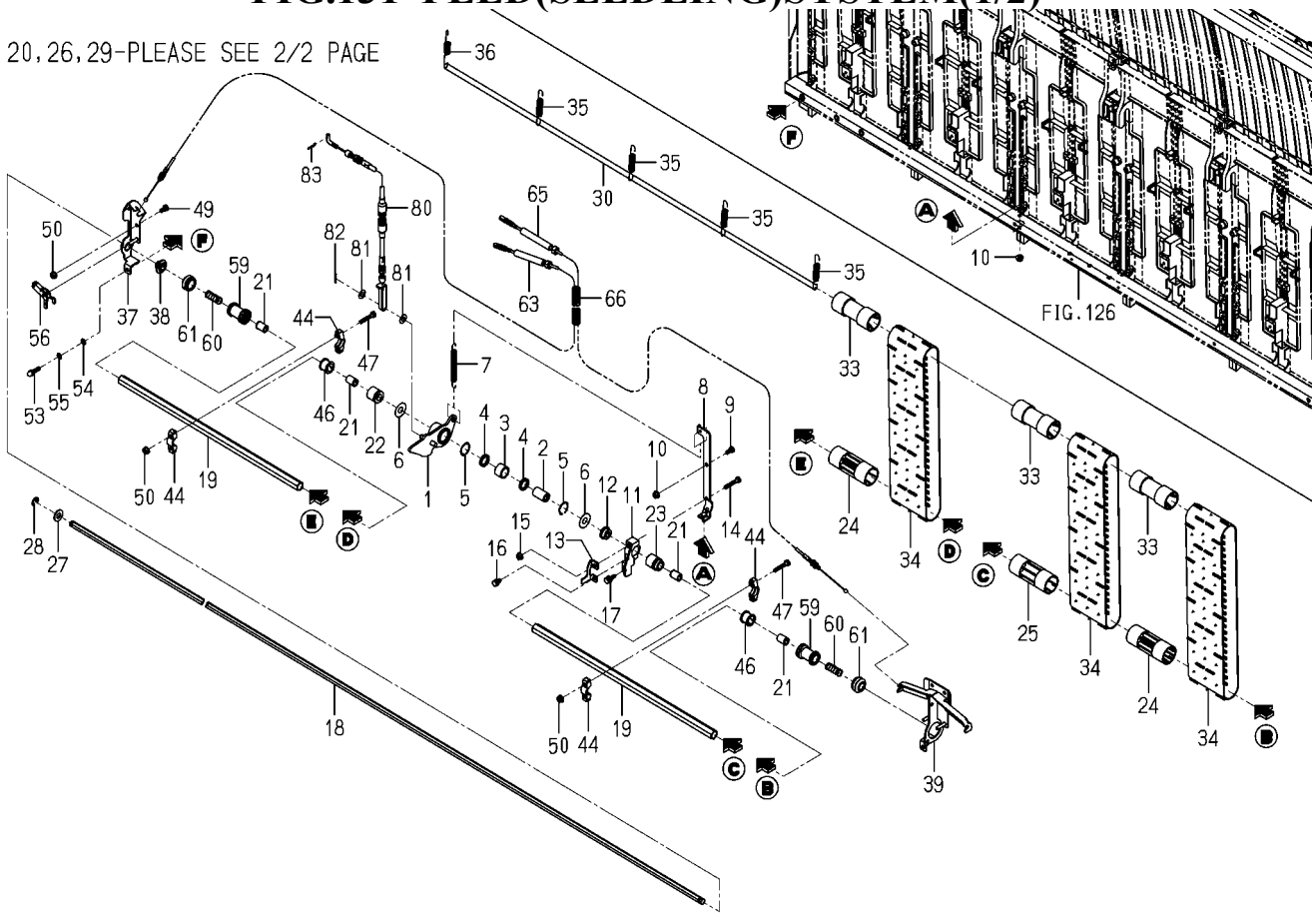


2233-805 -0100

| KEY | PART CODE | DESCRIPTION | SPC | TYPE OF MODEL NP80D | TYPE OF MODEL E16 | ITC | COL | GRP | REMARKS |
|---|---|---|---|---|---|---|---|---|---|
| 1 | 2233-805-200-00 | ARM/SEEDLING FEED/8 | * | 1 | | | | | |
| 2 | 2232-805-013-20 | SHAFT/ROLLER CLUTCH/ | * | 1 | | | | | |
| 3 | 2232-805-021-00 | ROLLERCLUTCH/HF1816 | * | 1 | | | | | |
| 4 | 2232-805-022-10 | OILSEAL/SDO18243.5/T | * | 2 | | | | | |
| 5 | 2232-805-029-00 | RING/SNAP | * | 2 | | | | | |
| 6 | 2232-805-028-00 | WASHER/12X30X01 | * | 2 | | | | | |
| 7 | 2232-805-011-10 | SPRING/HE104 | * | 1 | | | | | |
| 8 | 2232-805-210-00 | HOLDER/SPRING COMP | * | 1 | | | | | |
| 9 | V200-260-601-20 | BOLT/M6X12 | * | 1 | | | | | |
| 10 | V360-260-006-00 | NUT/WASHER/M6 | * | 2 | | | | | |
| 11 | 2233-805-001-00 | HOLDER/SEEDLINGARM/8 | * | 1 | | | | | |
| 12 | 2232-805-006-00 | BUSH/SEEDLINGFEED/20 | * | 1 | | | | | |
| 13 | 2233-805-002-00 | STOPPER/SEEDLING FEE | * | 1 | | | | | |
| 14 | V200-260-603-50 | BOLT/M6X35 | * | 1 | | | | | |
| 15 | V360-260-006-00 | NUT/WASHER/M6 | * | 1 | | | | | |
| 16 | V210-260-601-20 | BOLT,S/M6X12 | * | 1 | | | | | |
| 17 | V210-360-602-00 | BOLT,SP/M6X20 | * | 1 | | | | | |
| 18 | 2233-805-008-00 | SHAFT/SEEDLINGFEED/8 | * | 1 | | | | | |
| 19 | 2232-805-002-00 | SHAFT/SEEDLINGFEED/2 | * | 3 | | | | | |
| 20 | 2232-805-016-00 | SHAFT/SEEDLINGFEED/1 | * | 1 | | | | | |
| 21 | 2186-805-003-00 | BUSH,SEEDLING | * | 8 | | | | | |
| 22 | 2204-805-005-10 | BUSH/SEEDLING FEED/C | * | 2 | | | | | |
| 23 | 2186-805-005-00 | BUSH,SEEDING OUT | * | 1 | | | | | |
| 24 | 2232-805-003-00 | ROLLER/SEEDLINNG | * | 4 | | | | | |
| 25 | 2186-805-004-20 | ROLLER/SEEDLING | * | 12 | | | | | |
| 26 | 2190-805-024-00 | CLUTCH | * | 1 | | | | | |
| 27 | V411-260-012-00 | WASHER,PL/M12 | * | 1 | | | | | |
| 28 | 8841-725-002-00 | RETAINING RING/E TYP | * | 1 | | | | | |
| 29 | V710-140-006-00 | RING,SNAP/6 E | * | 1 | | | | | |
| 30 | 2194-805-032-00 | SHAFT/SEEDRING FEED/ | * | 1 | | | | | |

# FIG.131 FEED(SEEDLING)SYSTEM(2/2)

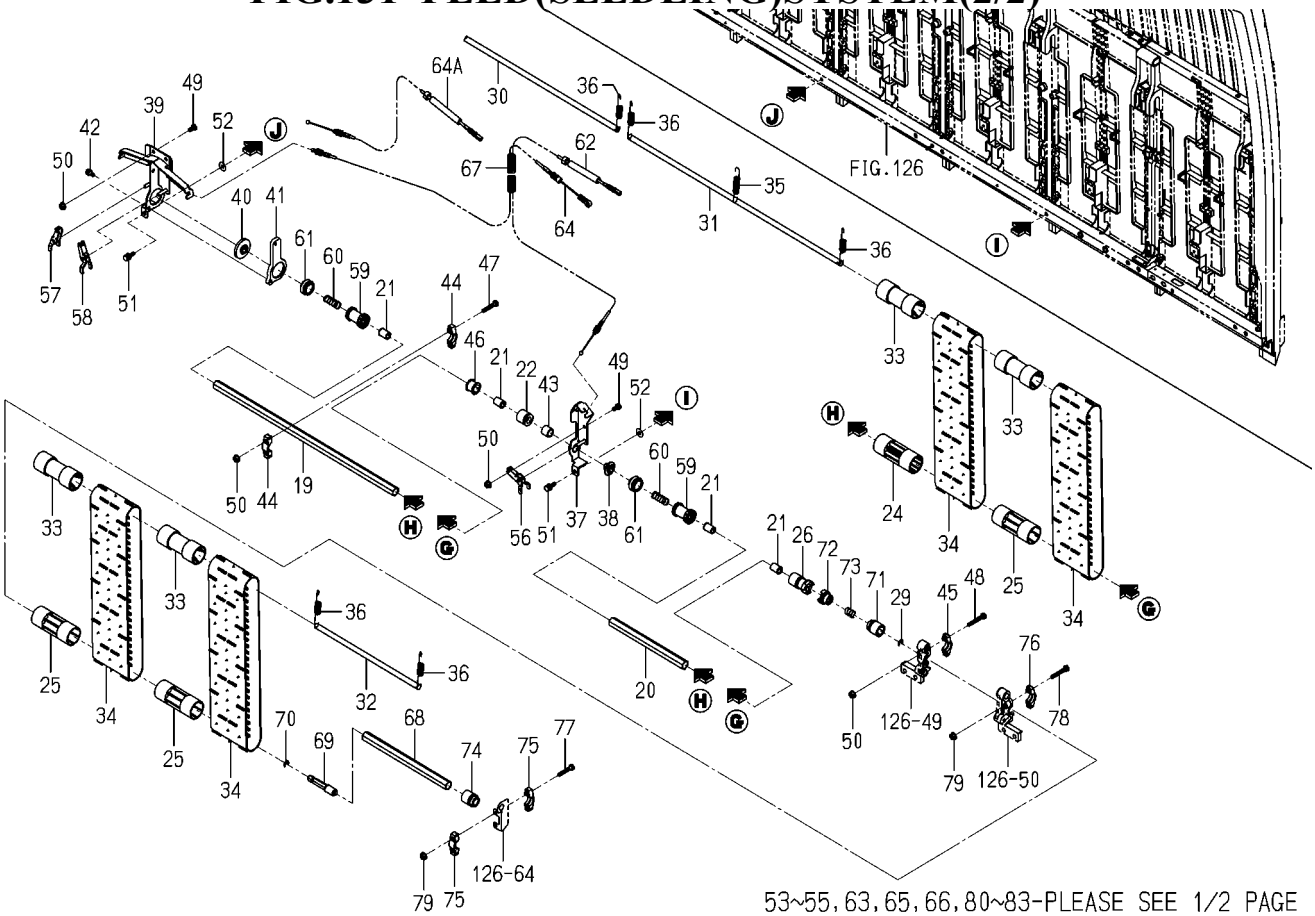


2233-805 -0100

| KEY | PART CODE | DESCRIPTION | SPC | TYPE OF MODEL NP80D E16 | | ITC | COL | GRP | REMARKS |
|---|---|---|---|---|---|---|---|---|---|
| 31 | 2204-805-010-10 | SHAFT/SEEDRING FEED/ | * | 1 | | | | | |
| 32 | 2204-805-064-00 | SHAFT | * | 1 | | | | | |
| 33 | 2161-835-019-00 | ROLLER,SEEDLING,UPPE | * | 16 | | | | | |
| 34 | 2204-805-025-00 | BELT/PLANT/PZ | * | 16 | | | | | |
| 35 | 2161-835-021-00 | SPRING,BELT/8 | * | 5 | | | | | |
| 36 | 2161-835-022-00 | SPRING,BELT/4 | * | 6 | | | | | |
| 37 | 2232-805-230-20 | PLATE/CLUTCH/RH COMP | * | 2 | | | | | |
| 38 | 2232-805-024-00 | BUSH/HOLDER/CLUTCH/N | * | 2 | | | | | |
| 39 | 2232-805-300-30 | PLATE/CLUTCH/7/ COMP | * | 1 | | | | | |
| 40 | 2232-805-030-00 | BUSH/HOLDER/CLUTCH/C | * | 1 | | | | | |
| 41 | 2232-805-031-00 | HOLDER/SEEDING | * | 1 | | | | | |
| 42 | V210-260-601-20 | BOLT,S/M6X12 | * | 2 | | | | | |
| 43 | 2232-805-010-10 | COLLAR/13X18X17 | * | 1 | | | | | |
| 44 | 2186-805-008-00 | HOLDER,SEEDLONG,UPPE | * | 6 | | | | | |
| 45 | 2232-805-034-00 | HOLDER/SEEDLING FEED | * | 1 | | | | | |
| 46 | 2186-805-011-00 | BUSH,SEEDLING | * | 3 | | | | | |
| 47 | V200-260-603-50 | BOLT/M6X35 | * | 6 | | | | | |
| 48 | V200-260-604-00 | BOLT/M6X40 | * | 1 | | | | | |
| 49 | V200-260-601-20 | BOLT/M6X12 | * | 6 | | | | | |
| 50 | V360-260-006-00 | NUT/WASHER/M6 | * | 13 | | | | | |
| 51 | V210-360-602-00 | BOLT,SP/M6X20 | * | 2 | | | | | |
| 52 | 3560-503-302-00 | WASHER,WIRE TENSION | * | 2 | | | | | |
| 53 | 2233-805-003-00 | PIN/STOPPER | * | 1 | | | | | |
| 54 | V411-260-006-00 | WASHER,PL/M6 | * | 1 | | | | | |
| 55 | V401-160-006-00 | WASHER,SP/M6 | * | 1 | | | | | |
| 56 | 2232-805-025-10 | ARM/CLUTCH/SEEDLING | * | 2 | | | | | |
| 57 | 2232-805-032-10 | ARM/CLUTCH/SEEDLING | * | 1 | | | | | |
| 58 | 2232-805-033-10 | ARM/CLUTCH/SEEDLING | * | 1 | | | | | |
| 59 | 2232-805-004-00 | CLUTCH/SEEDLING FEED | * | 4 | | | | | |
| 60 | 2232-805-007-00 | SPRING/HC034 | * | 4 | | | | | |

# FIG.131 FEED(SEEDLING)SYSTEM(2/2)

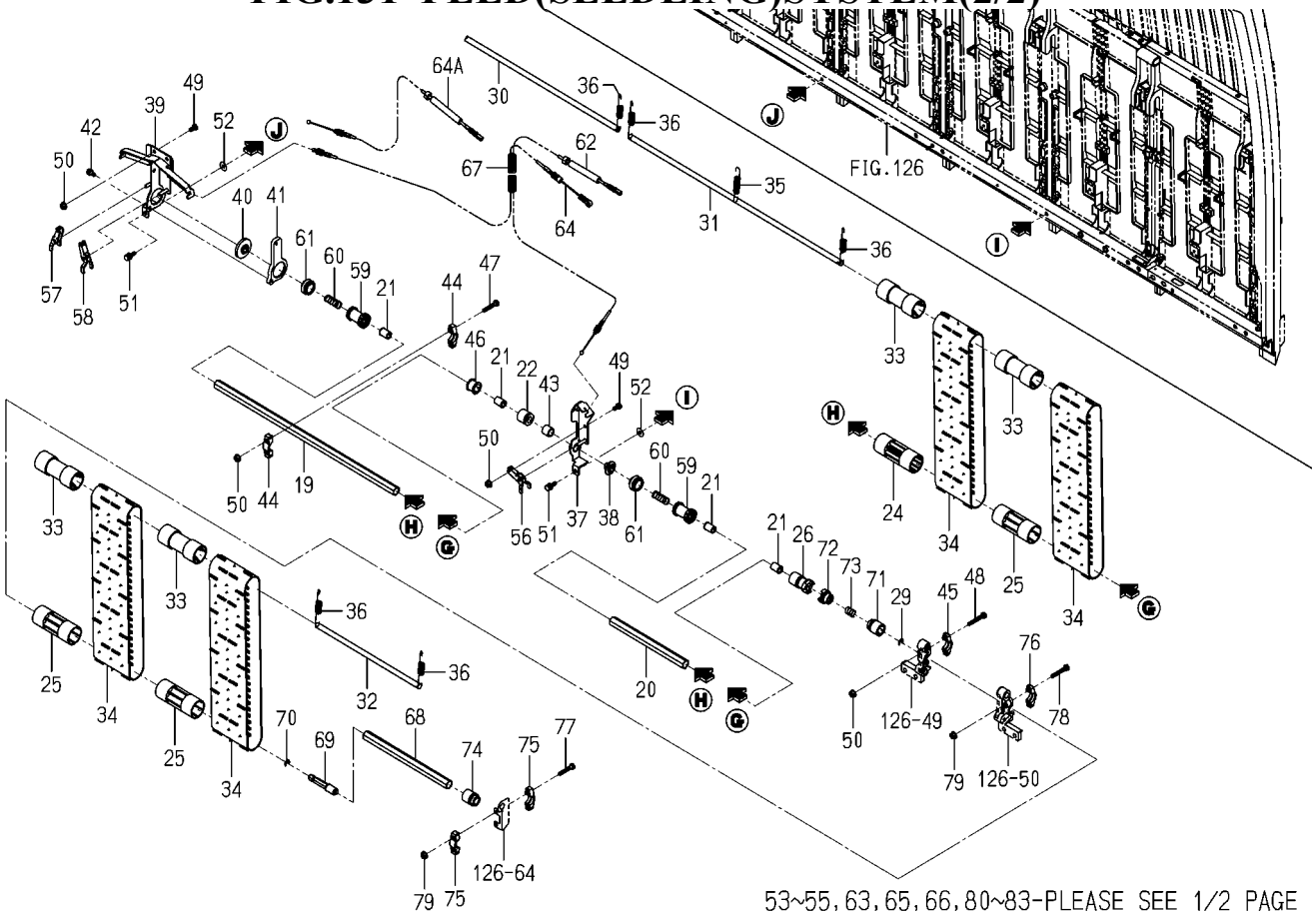


2233-805 -0100

| KEY | PART CODE | DESCRIPTION | SPC | TYPE OF MODEL NP80D E16 | | ITC | COL | GRP | REMARKS |
|---|---|---|---|---|---|---|---|---|---|
| 61 | 2232-805-023-00 | BOOT/SEEDLING FEED C | * | 4 | | | | | |
| 62 | 2232-805-051-10 | CABLE/SEEDLING FEED | * | 1 | | | | | |
| 63 | 2232-805-052-10 | CABLE/SEEDLING FEED | * | 1 | | | | | |
| 64 | 2233-805-051-00 | CABLE/SEEDLING FEED | * | 1 -175 | | | | | |
| 64A | 2232-805-052-10 | CABLE/SEEDLING FEED | * | 1 176- | | | | | |
| 65 | 2233-805-052-00 | CABLE/SEEDLING FEED | * | 1 | | | | | |
| 66 | 2232-805-056-00 | CORRUGATED TUBE/10X6 | * | 1 | | | | | |
| 67 | 2233-805-056-00 | CORRUGATED TUBE/10X7 | * | 1 | | | | | |
| 68 | 2186-805-052-00 | SHAFT,SEEDLING | * | 1 | | | | | |
| 69 | 2190-805-330-00 | PIN,CLUTCH | * | 1 | | | | | |
| 70 | V710-140-006-00 | RING,SNAP/6 E | * | 1 | | | | | |
| 71 | 2190-805-017-00 | BUSH,SEEDLING,FEED | * | 1 | | | | | |
| 72 | 2190-805-023-00 | CLUTCH | * | 1 | | | | | |
| 73 | 2190-805-012-00 | SPRING,HC030 | * | 1 | | | | | |
| 74 | 2186-805-005-00 | BUSH,SEEDING OUT | * | 1 | | | | | |
| 75 | 2186-805-008-00 | HOLDER,SEEDLONG,UPPE | * | 2 | | | | | |
| 76 | 2232-805-034-00 | HOLDER/SEEDLING FEED | * | 1 | | | | | |
| 77 | V200-260-603-50 | BOLT/M6X35 | * | 2 | | | | | |
| 78 | V200-260-604-00 | BOLT/M6X40 | * | 1 | | | | | |
| 79 | V360-260-006-00 | NUT/WASHER/M6 | * | 3 | | | | | |
| 80 | 2232-805-014-20 | CABLE/SEEDLING FEED | * | 1 | | | | | |
| 81 | V411-260-008-00 | WASHER,PL/M8 | * | 2 | | | | | |
| 82 | V500-162-501-50 | PIN,SPLIT/2.5X15 | * | 1 | | | | | |
| 83 | 2161-735-005-00 | PIN | * | 1 | | | | | |

# FIG.132 EXTENSION(TANK/SEEDLING)SYSTEM

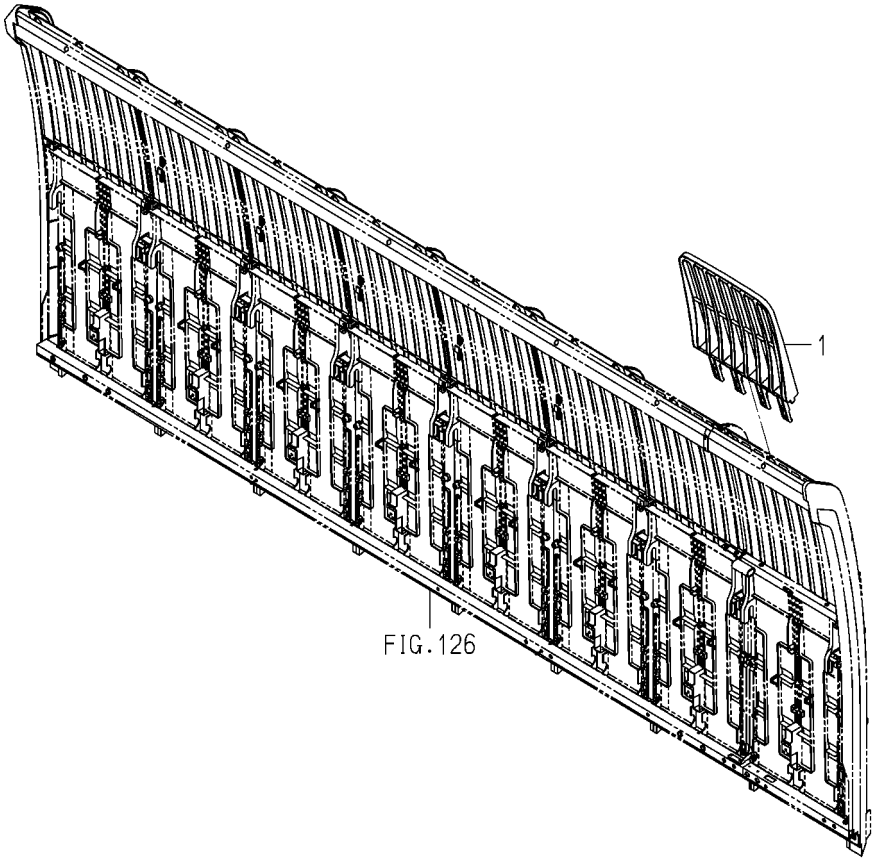


2233-806 -0100

| KEY | PART CODE | DESCRIPTION | SPC | TYPE OF MODEL NP80D E16 | | ITC | COL | GRP | REMARKS |
|---|---|---|---|---|---|---|---|---|---|
| 1 | 2232-806-001-10 | SEEDLINGTANK/EXTEND | * | 8 | | | | | |

# FIG.133 SWITCH(STOPPER/TANK/SLIDE)SYSTEM

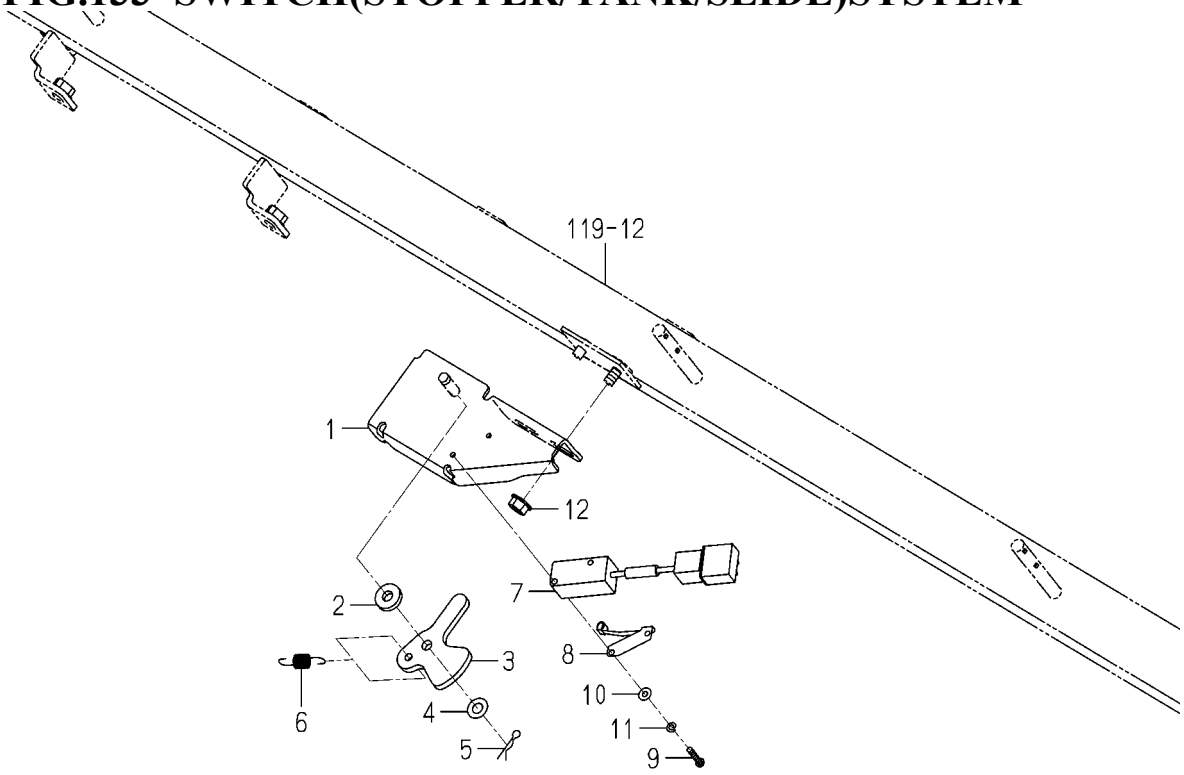


2232-807 -0100

| KEY | PART CODE | DESCRIPTION | SPC | TYPE OF MODEL NP80D E16 | | ITC | COL | GRP | REMARKS |
|---|---|---|---|---|---|---|---|---|---|
| 1 | 2232-807-200-10 | STAY/STOPSWITCH COMP | * | 1 | | 1 | | | |
| 2 | 2209-801-203-00 | WASHER/07X16X03 | * | 1 | | | | | |
| 3 | 2232-807-001-00 | CAM/STOPSWITCH | * | 1 | | | | | |
| 4 | V411-260-006-00 | WASHER,PL/M6 | * | 1 | | | | | |
| 5 | 2130-601-018-00 | PIN,SNAP/6 | * | 1 | | | | | |
| 6 | 2232-807-002-00 | SPRING/STOPSWITCH | * | 1 | | | | | |
| 7 | 3807-836-350-00 | SWITCH ASSY | * | 1 | | | | | |
| 8 | 3807-836-400-00 | ACTUATOR ASSY | * | 1 | | | | | |
| 9 | V111-163-001-60 | SCREW/M3X16 | * | 2 | | | | | |
| 10 | V411-260-003-00 | WASHER,PL/M3 | * | 2 | | | | | |
| 11 | V401-160-003-00 | WASHER,SP/M3 | * | 2 | | | | | |
| 12 | V360-260-006-00 | NUT/WASHER/M6 | * | 1 | | | | | |

# FIG.134 LABEL(CAUTION)(EXCEPT R TYPE)

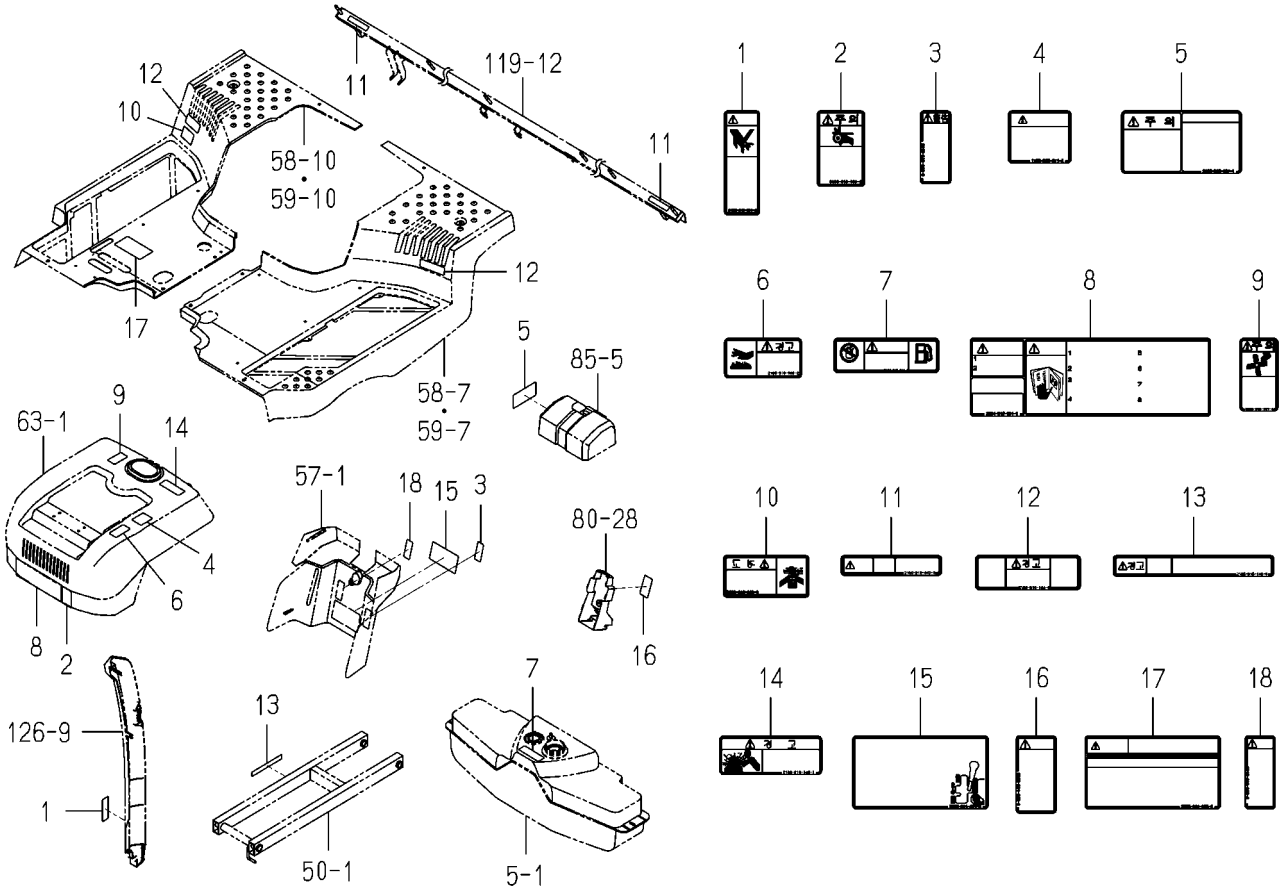


2233-901H-0100

| KEY | PART CODE | DESCRIPTION | SPC | TYPE OF MODEL NP80D E16 | | ITC | COL | GRP | REMARKS |
|---|---|---|---|---|---|---|---|---|---|
| 1 | 2186-916-001-20 | LABEL/CAUTION/CHECK/ | * | 1 | | | | | |
| 2 | 2186-916-002-20 | LABEL/CAUTION/BELT/ | * | 1 | | | | | |
| 3 | 2213-916-002-00 | LABEL/WARNING/PEDAL/ | * | 1 | | | | | |
| 4 | 1756-905-071-00 | LABEL/CAUTION/COVER/ | * | 1 | | | | | |
| 5 | 2186-916-007-10 | LABEL/CAUTION/BATTER | * | 1 | | | | | |
| 6 | 2186-916-009-20 | LABEL/WARNING/MUFFLE | * | 1 | | | | | |
| 7 | 2186-916-010-30 | LABEL/CAUTION | * | 1 | | | | | |
| 8 | 2204-916-001-00 | LABEL/CAUTION/DRIVE/ | * | 1 | | | | | |
| 9 | 3829-905-001-00 | LABEL/CAUTION/FAN/K | * | 1 | | | | | |
| 10 | 2186-916-042-00 | LABEL/WARNING/GAS/K | * | 1 | | | | | |
| 11 | 2186-916-043-00 | LABEL/CAUTION/MARKER | * | 2 | | | | | |
| 12 | 2186-916-044-00 | LABEL/WARNING | * | 2 | | | | | |
| 13 | 2186-916-045-00 | LABEL/WARNING/SHAFT | * | 1 | | | | | |
| 14 | 2186-916-046-00 | LABEL/WARNING/RADIAT | * | 1 | | | | | |
| 15 | 2232-901-031-00 | LABEL/CAUTION/JUST/P | * | 1 | | | | | |
| 16 | 2232-901-032-00 | LABEL/WARNING/JUST/P | * | 1 | | | | | |
| 17 | 2232-901-033-00 | LABEL/WARNING/PLANT | * | 1 | | | | | |
| 18 | 2213-916-003-00 | LABEL/WARNING/BRAKE/ | * | 1 | | | | | |

# FIG.135 LABEL(CAUTION)(R TYPE)

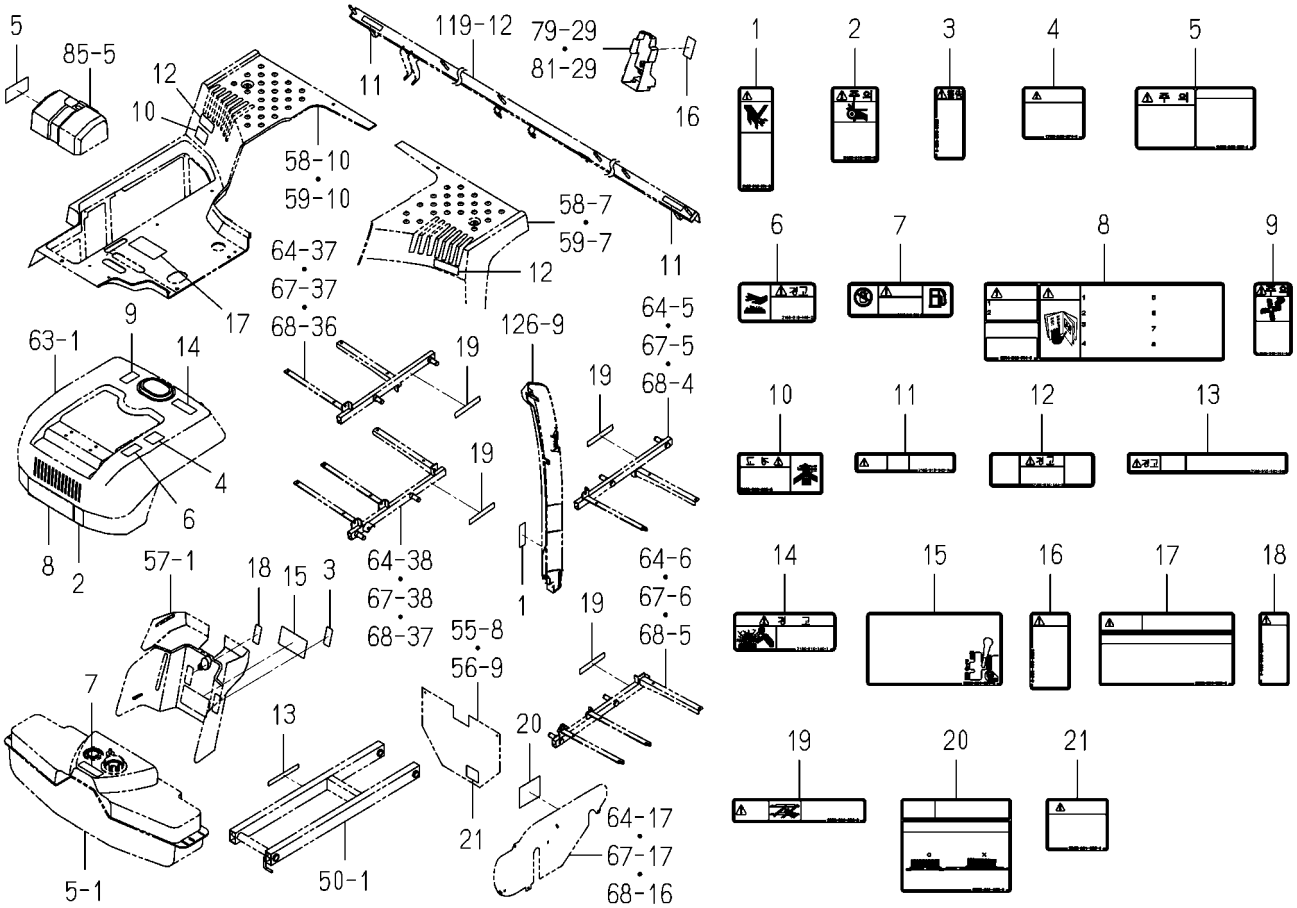


2233-901O-0100

| KEY | PART CODE | DESCRIPTION | SPC | TYPE OF MODEL NP80D E16 | | ITC | COL | GRP | REMARKS |
|---|---|---|---|---|---|---|---|---|---|
| 1 | 2186-916-001-20 | LABEL/CAUTION/CHECK/ | * | 1 | | | | | |
| 2 | 2186-916-002-20 | LABEL/CAUTION/BELT/ | * | 1 | | | | | |
| 3 | 2213-916-002-00 | LABEL/WARNING/PEDAL/ | * | 1 | | | | | |
| 4 | 1756-905-071-00 | LABEL/CAUTION/COVER/ | * | 1 | | | | | |
| 5 | 2186-916-007-10 | LABEL/CAUTION/BATTER | * | 1 | | | | | |
| 6 | 2186-916-009-20 | LABEL/WARNING/MUFFLE | * | 1 | | | | | |
| 7 | 2186-916-010-30 | LABEL/CAUTION | * | 1 | | | | | |
| 8 | 2204-916-001-00 | LABEL/CAUTION/DRIVE/ | * | 1 | | | | | |
| 9 | 3829-905-001-00 | LABEL/CAUTION/FAN/K | * | 1 | | | | | |
| 10 | 2186-916-042-00 | LABEL/WARNING/GAS/K | * | 1 | | | | | |
| 11 | 2186-916-043-00 | LABEL/CAUTION/MARKER | * | 2 | | | | | |
| 12 | 2186-916-044-00 | LABEL/WARNING | * | 2 | | | | | |
| 13 | 2186-916-045-00 | LABEL/WARNING/SHAFT | * | 1 | | | | | |
| 14 | 2186-916-046-00 | LABEL/WARNING/RADIAT | * | 1 | | | | | |
| 15 | 2232-901-031-00 | LABEL/CAUTION/JUST/P | * | 1 | | | | | |
| 16 | 2232-901-032-00 | LABEL/WARNING/JUST/P | * | 1 | | | | | |
| 17 | 2232-901-033-00 | LABEL/WARNING/PLANT | * | 1 | | | | | |
| 18 | 2213-916-003-00 | LABEL/WARNING/BRAKE/ | * | 1 | | | | | |
| 19 | 2232-901-034-00 | LABEL/CAUTION/Z LINK | * | 4 | | | | | |
| 20 | 2232-901-035-00 | LABEL/CAUTION/SEEDLI | * | 1 | | | | | |
| 21 | 2232-901-036-00 | LABEL/CAUTION/WASHIN | * | 1 | | | | | |

# FIG.136 LABEL(CAUTION)(Z TYPE)

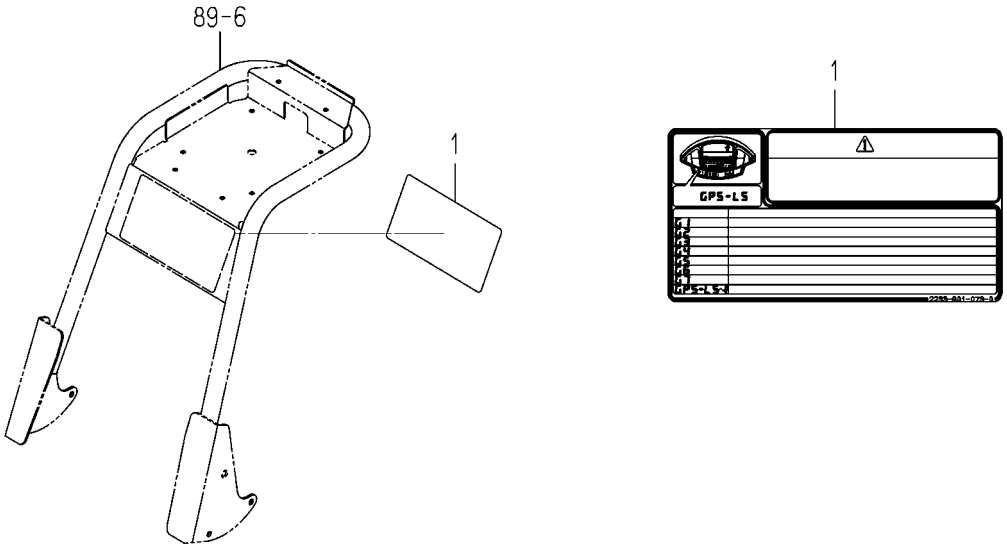


2233-901P-0100

| KEY | PART CODE | DESCRIPTION | SPC | TYPE OF MODEL NP80D E16 | | ITC | COL | GRP | REMARKS |
|---|---|---|---|---|---|---|---|---|---|
| 1 | 2233-901-073-00 | LABEL/WARNING/Z/E16 | * | 1 | | | | | |

# FIG.137 ORNAMENT&LABEL(EXCEPT R TYPE)

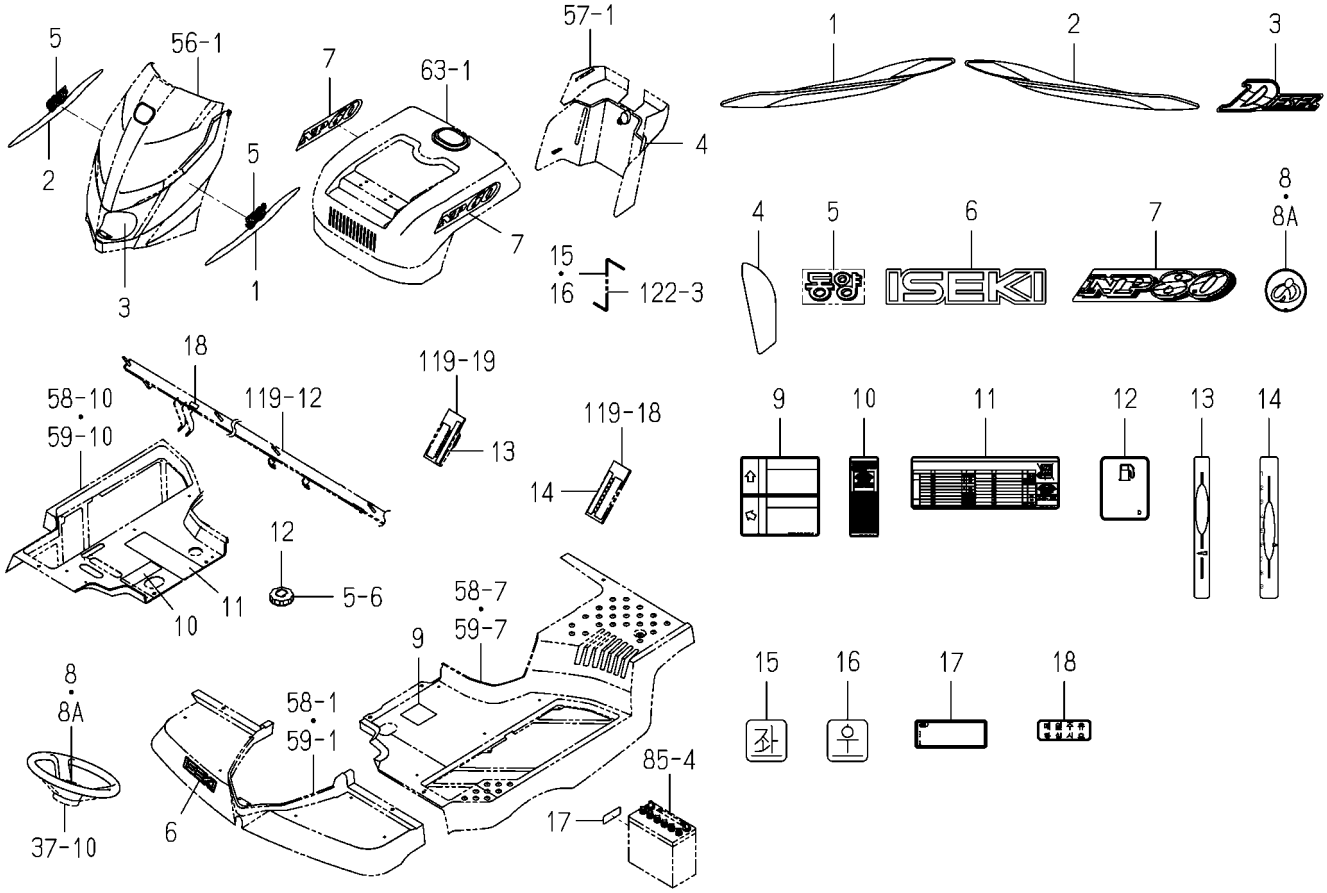


2233-912J-0100

| KEY | PART CODE | DESCRIPTION | SPC | TYPE OF MODEL NP80D E16 | | ITC | COL | GRP | REMARKS |
|---|---|---|---|---|---|---|---|---|---|
| 1 | 2232-912-003-00 | MOLDING/HOOD/LH | * | 1 | | | | | |
| 2 | 2232-912-004-00 | MOLDING/HOOD/RH | * | 1 | | | | | |
| 3 | 2233-912-002-00 | ORNAMENT/DIESEL | * | 1 | | | | | |
| 4 | 2232-912-027-00 | LABEL/HOOD/REAR | * | 1 | | | | | |
| 5 | 2232-912-054-00 | ORNAMENT/TONGYANG/NP | * | 2 | | | | | |
| 6 | 1716-901-016-00 | ORNAMENT/ISEKI | * | 1 | | | | | |
| 7 | 2233-912-001-00 | ORNAMENT/NP80 | * | 2 | | | | | |
| 8 | 2232-912-021-00 | ORNAMENT/STEERING | * | 1 -80 | | | | | |
| 8A | 2232-912-021-10 | ORNAMENT/STEERING | * | 1 81- | | 1 | | | |
| 9 | 2232-912-046-00 | LABEL/OILING/NP/E16 | * | 1 | | | | | |
| 10 | 2232-912-058-00 | LABEL/ERROR VIEW/NP/ | * | 1 81- | | | | | |
| 11 | 2232-912-059-00 | LABEL/CONTROLLER SET | * | 1 81- | | | | | |
| 12 | 2213-916-005-00 | LABEL/DIESELFUEL/K | * | 1 | | | | | |
| 13 | 2232-912-047-00 | LABEL/SEEDLING PICKI | * | 1 | | | | | |
| 14 | 2232-912-048-00 | LABEL/DEPTH/E16 | * | 1 | | | | | |
| 15 | 2190-916-007-00 | LABEL/LEFT/E16 | * | 1 | | | | | |
| 16 | 2190-916-008-00 | LABEL/RIGHT/E16 | * | 1 | | | | | |
| 17 | 2186-916-035-10 | LABEL/BATTERY/K | * | 1 | | | | | |
| 18 | 2186-916-019-10 | LABEL/OIL/K | * | 1 | | | | | |

# FIG.138 ORNAMENT&LABEL(R TYPE)

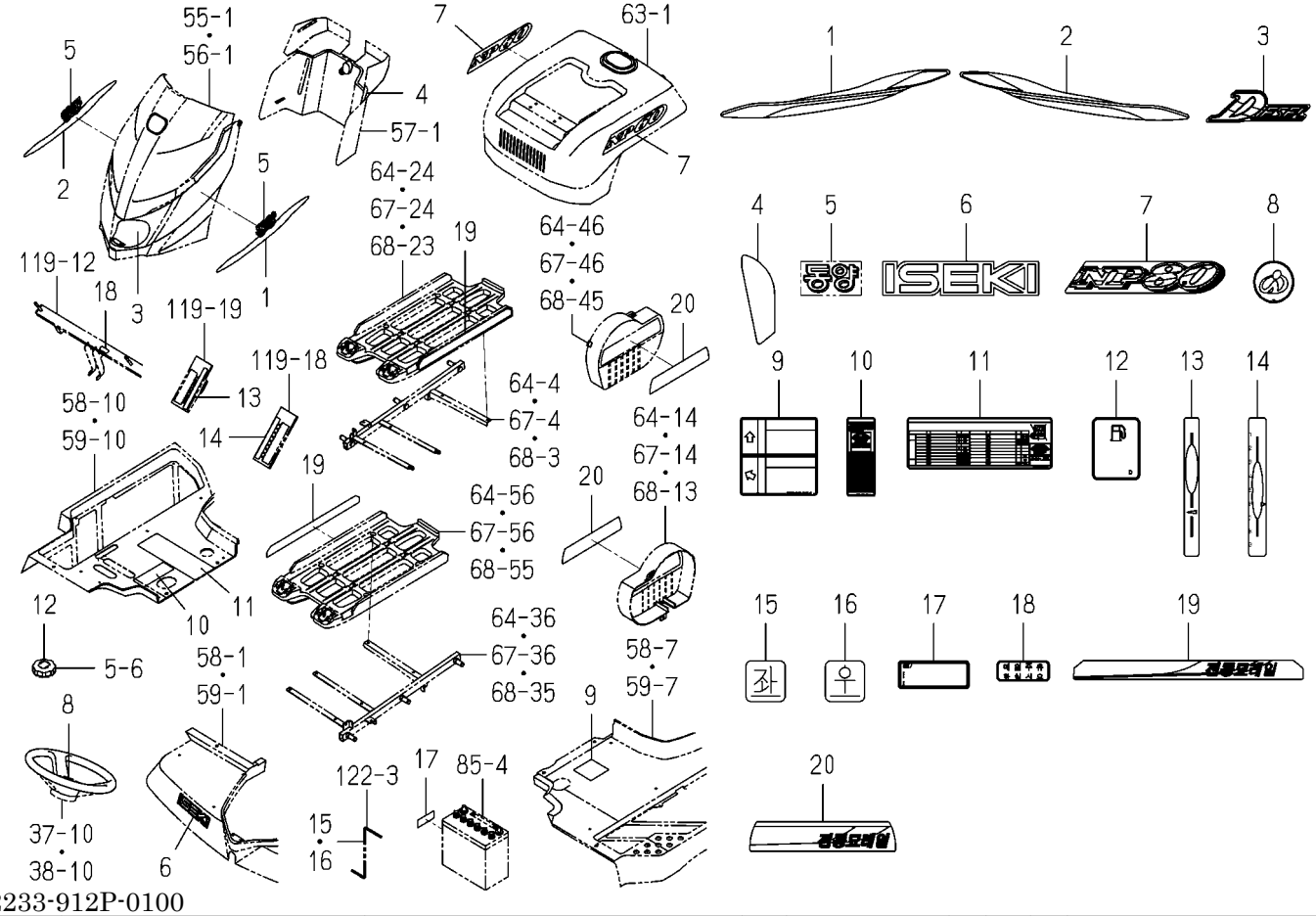


2233-912P-0100

| KEY | PART CODE | DESCRIPTION | SPC | TYPE OF MODEL NP80D E16 | | ITC | COL | GRP | REMARKS |
|---|---|---|---|---|---|---|---|---|---|
| 1 | 2232-912-003-00 | MOLDING/HOOD/LH | * | 1 | | | | | |
| 2 | 2232-912-004-00 | MOLDING/HOOD/RH | * | 1 | | | | | |
| 3 | 2233-912-002-00 | ORNAMENT/DIESEL | * | 1 | | | | | |
| 4 | 2232-912-027-00 | LABEL/HOOD/REAR | * | 1 | | | | | |
| 5 | 2232-912-054-00 | ORNAMENT/TONGYANG/NP | * | 2 | | | | | |
| 6 | 1716-901-016-00 | ORNAMENT/ISEKI | * | 1 | | | | | |
| 7 | 2233-912-001-00 | ORNAMENT/NP80 | * | 2 | | | | | |
| 8 | 2232-912-021-10 | ORNAMENT/STEERING | * | 1 | | | | | |
| 9 | 2232-912-046-00 | LABEL/OILING/NP/E16 | * | 1 | | | | | |
| 10 | 2232-912-058-00 | LABEL/ERROR VIEW/NP/ | * | 1 | | | | | |
| 11 | 2232-912-059-00 | LABEL/CONTROLLER SET | * | 1 | | | | | |
| 12 | 2213-916-005-00 | LABEL/DIESELFUEL/K | * | 1 | | | | | |
| 13 | 2232-912-047-00 | LABEL/SEEDLING PICKI | * | 1 | | | | | |
| 14 | 2232-912-048-00 | LABEL/DEPTH/E16 | * | 1 | | | | | |
| 15 | 2190-916-007-00 | LABEL/LEFT/E16 | * | 1 | | | | | |
| 16 | 2190-916-008-00 | LABEL/RIGHT/E16 | * | 1 | | | | | |
| 17 | 2186-916-035-10 | LABEL/BATTERY/K | * | 1 | | | | | |
| 18 | 2186-916-019-10 | LABEL/OIL/K | * | 1 | | | | | |
| 19 | 2232-912-037-00 | ORNAMENT/NAERAIL/1/E | * | 2 | | | | | |
| 20 | 2232-912-038-00 | ORNAMENT/NAERAIL/2/E | * | 2 | | | | | |

# FIG.139 ORNAMENT&LABEL(Z TYPE)

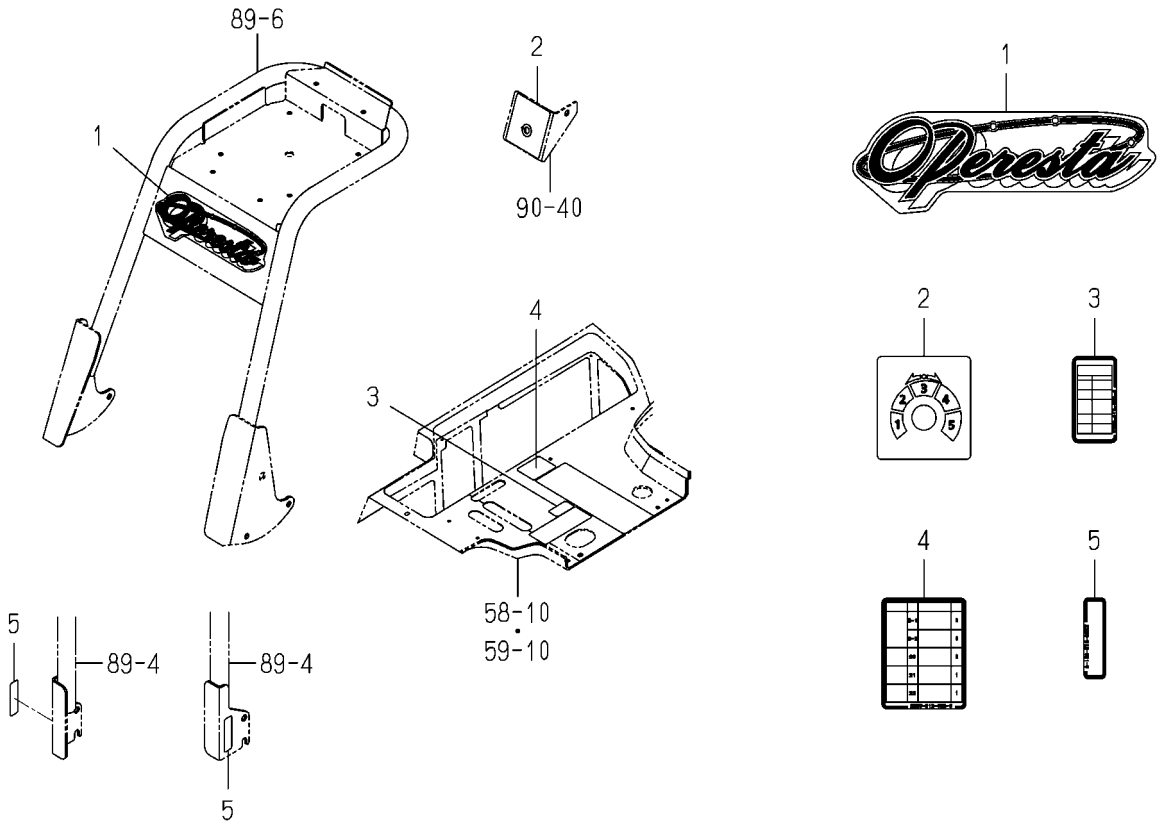


2233-912W-0100

| KEY | PART CODE | DESCRIPTION | SPC | TYPE OF MODEL NP80D E16 | | ITC | COL | GRP | REMARKS |
|---|---|---|---|---|---|---|---|---|---|
| 1 | 2233-912-082-00 | ORNAMENT/OPERESTA | * | 1 | | | | | |
| 2 | 2233-912-087-00 | LABEL/STEERING AMOUN | * | 1 | | | | | |
| 3 | 2233-912-088-00 | LABEL/ERROR | * | 1 | | | | | |
| 4 | 2233-912-089-00 | LABEL/CONTROLLER/Z/E | * | 1 | | | | | |
| 5 | 2233-912-091-00 | LABEL/ROPE/LENGTH/E1 | * | 2 | | | | | |

# FIG.140 LABEL(PLANT INTERVAL)

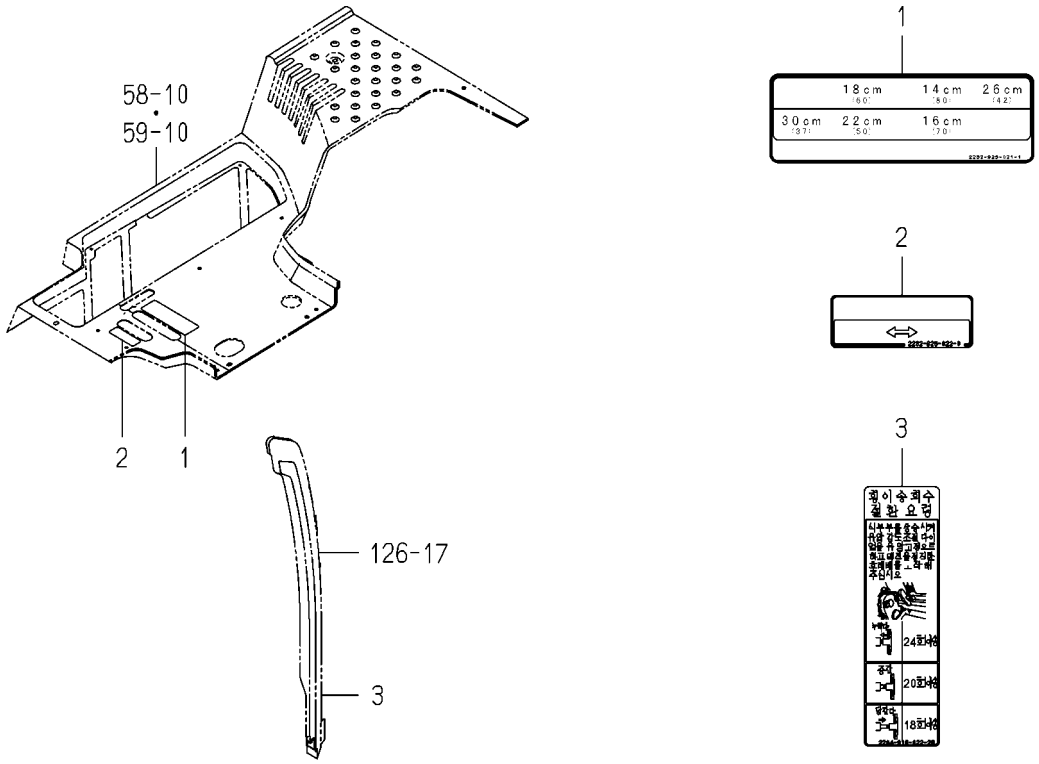


2232-925G-0100

| KEY | PART CODE | DESCRIPTION | SPC | TYPE OF MODEL NP80D | TYPE OF MODEL E16 | ITC | COL | GRP | REMARKS |
|---|---|---|---|---|---|---|---|---|---|
| 1 | 2232-925-021-10 | LABEL/PLANT INTERVAL | * | 1 | | | | | |
| 2 | 2232-925-022-00 | LABEL/PLANT INTERVAL | * | 1 | | | | | |
| 3 | 2204-916-022-20 | LABEL/SLIDER/LEVER/K | * | 1 | | | | | |

# FIG.141 LABEL(CAUTION,CONTROL) (F TYPE EXCEPT R)

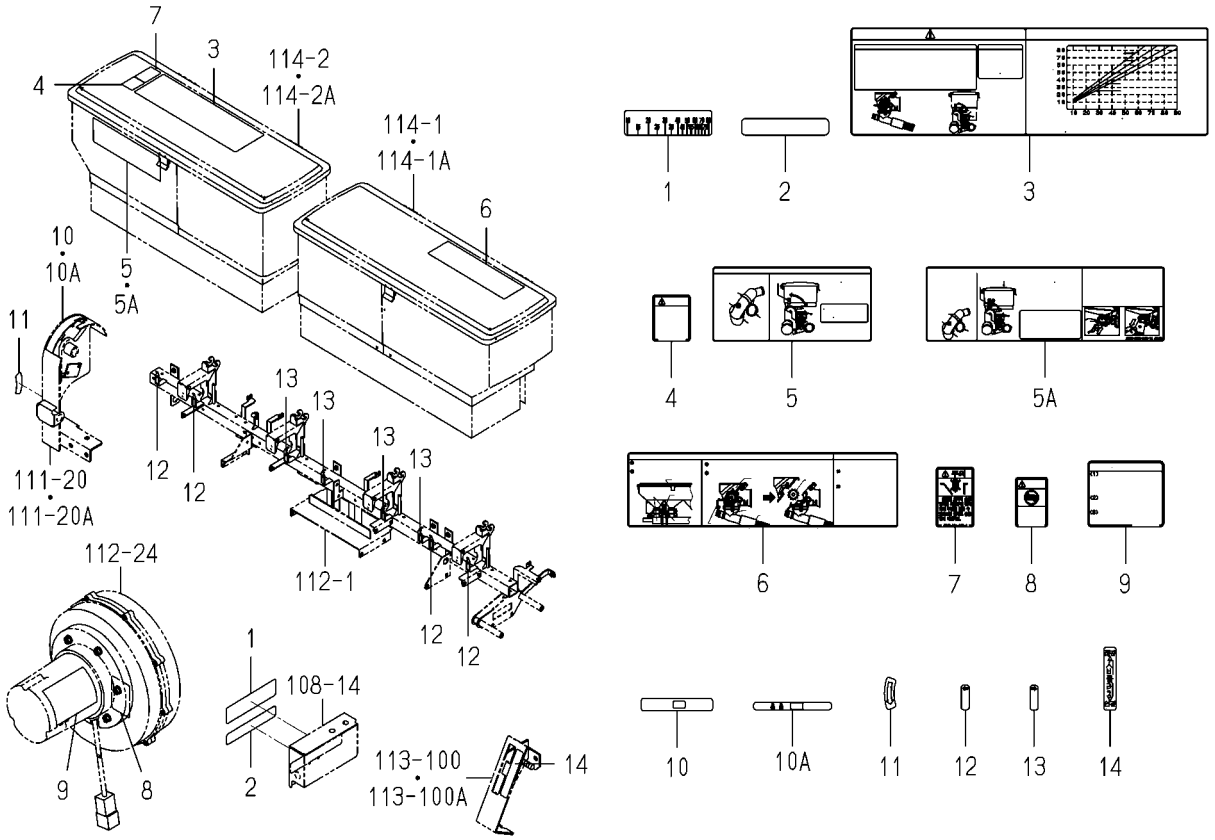


2233-928B-0100

| KEY | PART CODE | DESCRIPTION | SPC | TYPE OF MODEL NP80D E16 | | ITC | COL | GRP | REMARKS |
|---|---|---|---|---|---|---|---|---|---|
| 1 | 2232-926-051-00 | LABEL/FERTILIZER/NP/ | * | 1 | | | | | |
| 2 | 2232-926-009-00 | LABEL/A MOUNT OF FER | * | 1 | | | | | |
| 3 | 2232-926-052-00 | LABEL/CAUTION/FERTIL | * | 1 | | | | | |
| 4 | 2232-926-053-00 | LABEL/CAUTION/HOPPER | * | 1 | | | | | |
| 5 | 2232-926-054-00 | LABEL/DISCHARGE OPER | * | 1 -180 | | | | | |
| 5A | 2233-926-006-10 | LABEL/DISCHARGE OPER | * | 1 181- | | 1 | | | |
| 6 | 2232-926-055-00 | LABEL/CLEANING/CAPSU | * | 1 | | | | | |
| 7 | 8842-905-042-00 | LABEL/CAUTION/HOPPER | * | 1 | | | | | |
| 8 | 3829-905-052-00 | LABEL/CAUTION/HAND | * | 1 | | | | | |
| 9 | 2232-926-056-00 | LABEL/CAUTION/BLOWER | * | 1 | | | | | |
| 10 | 2232-926-057-00 | LABEL/DISCHARGE LEVE | * | 1 -180 | | | | | |
| 10A | 2233-926-007-00 | LABEL/DISCHARGELEVER | * | 1 181- | | | | | |
| 11 | 2232-926-011-00 | LABEL/HANDLE | * | 1 | | | | | |
| 12 | 2232-926-058-00 | LABEL/CLUTCH/LH/E16 | * | 4 | | | | | |
| 13 | 2232-926-059-00 | LABEL/CLUTCH/RH/E16 | * | 4 | | | | | |
| 14 | 8844-906-006-00 | LABEL/TOTALCLUTCH/K | * | 1 | | | | | |

# FIG.142 LABEL(CAUTION,CONTROL)(RF TYPE)

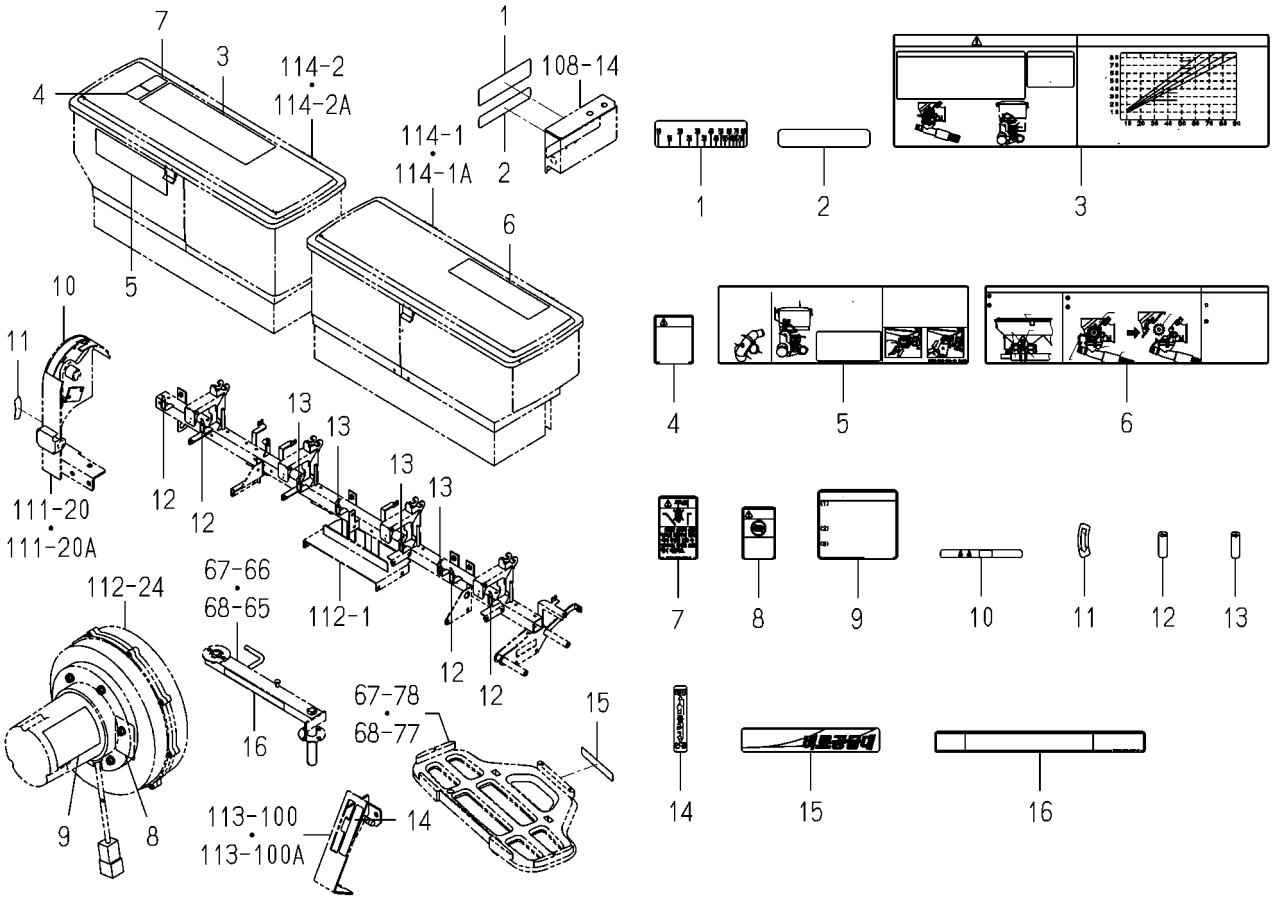


2233-928F-0100

| KEY | PART CODE | DESCRIPTION | SPC | TYPE OF MODEL NP80D E16 | | ITC | COL | GRP | REMARKS |
|---|---|---|---|---|---|---|---|---|---|
| 1 | 2232-926-051-00 | LABEL/FERTILIZER/NP/ | * | 1 | | | | | |
| 2 | 2232-926-009-00 | LABEL/A MOUNT OF FER | * | 1 | | | | | |
| 3 | 2232-926-052-00 | LABEL/CAUTION/FERTIL | * | 1 | | | | | |
| 4 | 2232-926-053-00 | LABEL/CAUTION/HOPPER | * | 1 | | | | | |
| 5 | 2233-926-006-10 | LABEL/DISCHARGE OPER | * | 1 | | | | | |
| 6 | 2232-926-055-00 | LABEL/CLEANING/CAPSU | * | 1 | | | | | |
| 7 | 8842-905-042-00 | LABEL/CAUTION/HOPPER | * | 1 | | | | | |
| 8 | 3829-905-052-00 | LABEL/CAUTION/HAND | * | 1 | | | | | |
| 9 | 2232-926-056-00 | LABEL/CAUTION/BLOWER | * | 1 | | | | | |
| 10 | 2233-926-007-00 | LABEL/DISCHARGELEVER | * | 1 | | | | | |
| 11 | 2232-926-011-00 | LABEL/HANDLE | * | 1 | | | | | |
| 12 | 2232-926-058-00 | LABEL/CLUTCH/LH/E16 | * | 4 | | | | | |
| 13 | 2232-926-059-00 | LABEL/CLUTCH/RH/E16 | * | 4 | | | | | |
| 14 | 8844-906-006-00 | LABEL/TOTALCLUTCH/K | * | 1 | | | | | |
| 15 | 2232-912-039-00 | ORNAMENT/ARM/E16 | * | 1 | | | | | |
| 16 | 2232-901-037-00 | LABEL/CAUTION/FERTIL | * | 1 | | | | | |

# FIG.143 MANUAL(OPERATION), BRUSH&HANDLE(SEND OUT)SYSTEM(F TYPE)

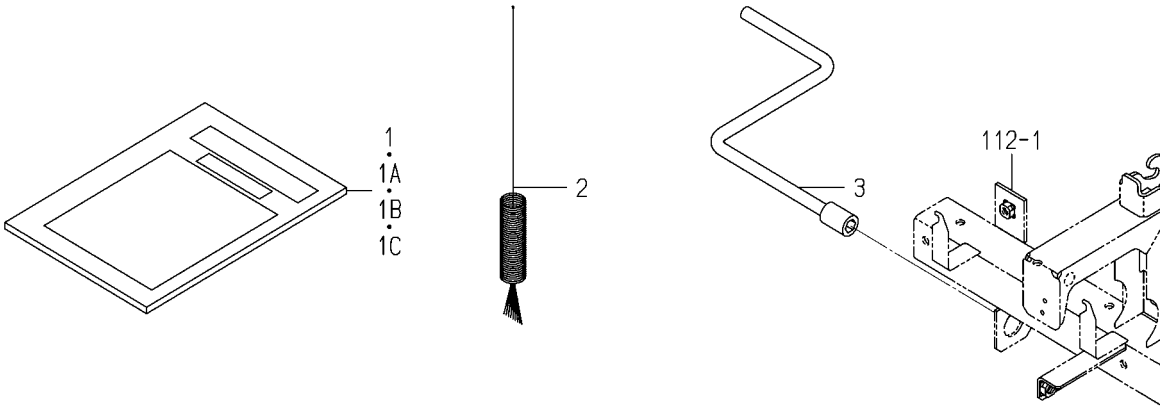


2232-955 -0100

| KEY | PART CODE | DESCRIPTION | SPC | TYPE OF MODEL NP80D | TYPE OF MODEL E16 | ITC | COL | GRP | REMARKS |
|---|---|---|---|---|---|---|---|---|---|
| 1 | 2232-955-002-10 | MANUAL/OPERATION/F | * | 1 -175 | | | | | |
| 1A | 2232-955-002-20 | MANUAL/OPERATION/F | * | 1 -183 | | 1 | | | |
| 1B | 2232-955-002-30 | MANUAL/OPERATION/F | * | 1 -275 | | 3 | | | |
| 1C | 2232-955-002-50 | MANUAL/OPERATION/F | * | 1 276- | | 1 | | | |
| 2 | 8842-919-002-10 | BRUSH | * | 1 | | | | | |
| 3 | 2232-655-500-10 | HANDLE/DELIVERY COMP | * | 1 | | | | | |

# FIG.144 ACCESSORY(FORK&GREASE)

2233-971E-0100

| KEY | PART CODE | DESCRIPTION | SPC | TYPE OF MODEL NP80D E16 | | ITC | COL | GRP | REMARKS |
|---|---|---|---|---|---|---|---|---|---|
| 1 | 2204-738-080-10 | PIECE/FORK/PK | * | 16 | | | | | |
| 2 | 8849-001-200-00 | GREASE,PLANTING/300G | * | 1 | | | | | |

# FIG.145 GREASE(PLANTER)ASSY(OPTION)

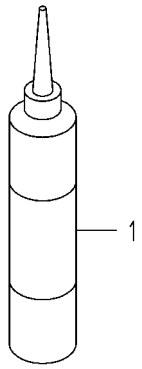


8849-001A-0100

| KEY | PART CODE | DESCRIPTION | SPC | TYPE OF MODEL NP80D E16 | | ITC | COL | GRP | REMARKS |
|---|---|---|---|---|---|---|---|---|---|
| 1 | 8849-001-300-00 | GREASE | T | 1 | | | | | |

# FIG.146 HYDRAULIC LOCK(6/8/5D/7D)SET(OPTION)

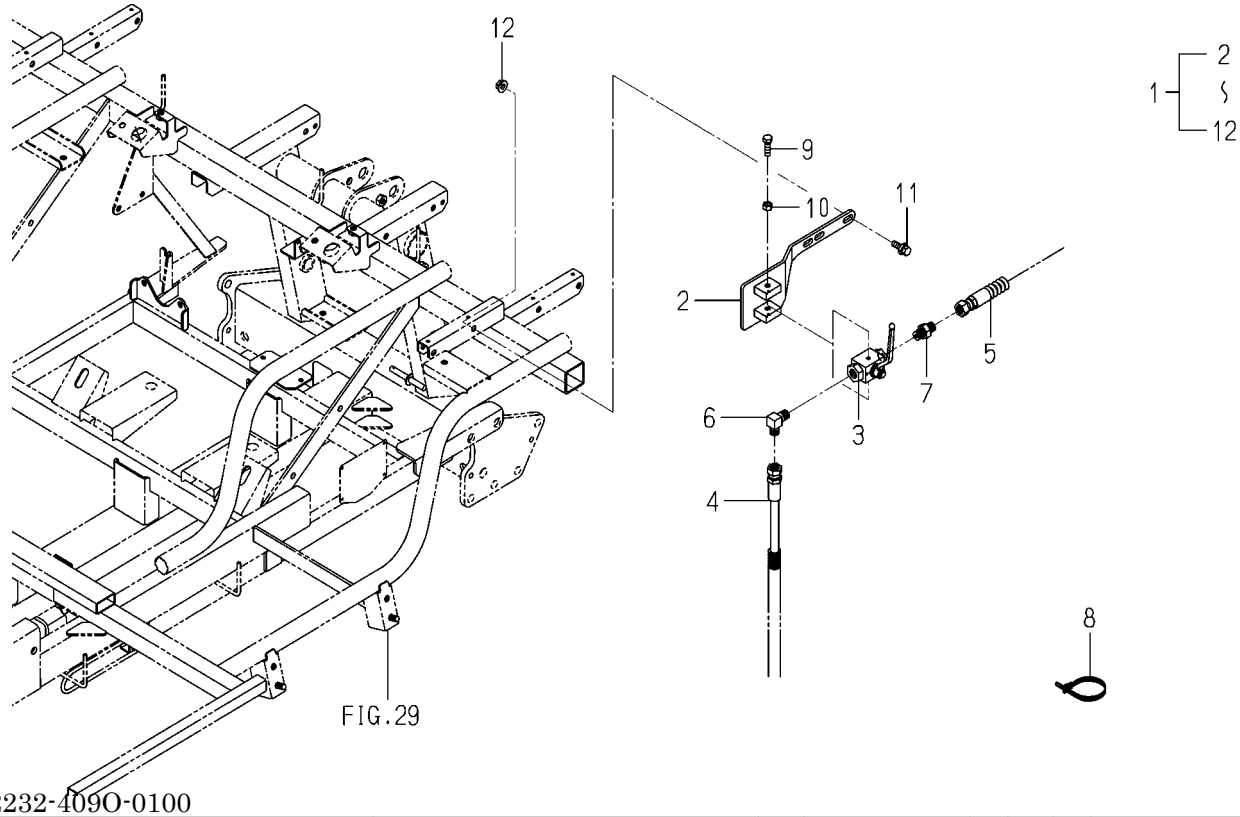


2232-409O-0100

| KEY | PART CODE | DESCRIPTION | SPC | TYPE OF MODEL NP80D E16 | | ITC | COL | GRP | REMARKS |
|---|---|---|---|---|---|---|---|---|---|
| 1 | 2232-409-300-00 | HYDRAULIC LOCK/6/8/5 | T | 1 | | | | | |
| 2 | 2233-409-800-00 | STAY/HYDRAULIC LOCK | T | 1 | | | | | |
| 3 | 2232-409-320-00 | BALLVALVE/LOCK ASSY | T | 1 | | | | | |
| 4 | 2204-409-051-00 | HOSE/1430/H | T | 1 | | | | | |
| 5 | 1705-408-320-00 | HOSE/HYDRO/1000 ASSY | T | 1 | | | | | |
| 6 | 3768-185-022-10 | ADAPTER/90DEG/PUMP | T | 1 | | | | | |
| 7 | 3676-352-001-00 | ADAPTOR/STRAIGHT | T | 1 | | | | | |
| 8 | 1421-621-038-00 | BAND,WIRE/170 | T | 1 | | | | | |
| 9 | V201-260-802-50 | BOLT/M8X25 | T | 1 | | | | | |
| 10 | V304-260-008-00 | NUT/M8 | T | 1 | | | | | |
| 11 | V211-360-802-50 | BOLT,SP/M8X25 | T | 2 | | | | | |
| 12 | V362-260-008-00 | NUT/WASHER/M8 | T | 2 | | | | | |

# FIG.147 LINK(FLOAT/NP)SET(REPAIR)

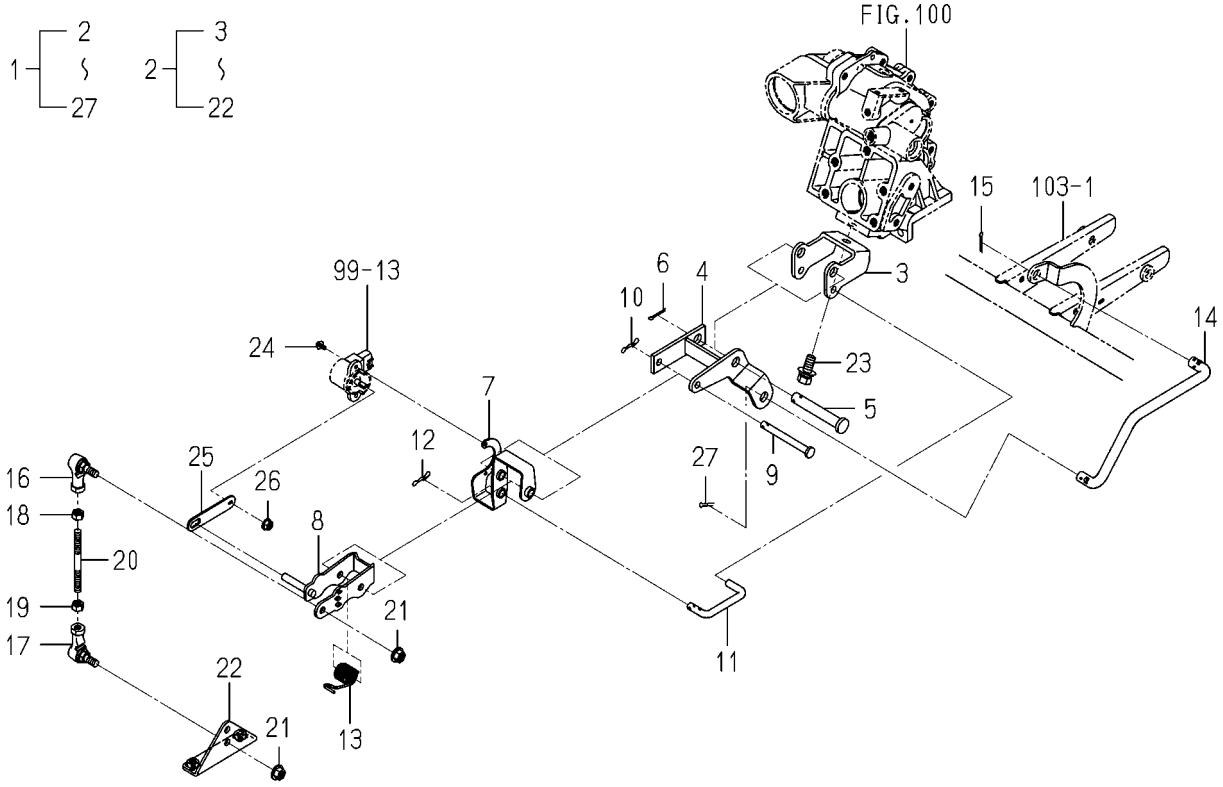


2232-605R-0100

| KEY | PART CODE | DESCRIPTION | SPC | TYPE OF MODEL NP80D | TYPE OF MODEL E16 | ITC | COL | GRP | REMARKS |
|---|---|---|---|---|---|---|---|---|---|
| 1 | 2232-605-900-00 | LINK/FLOAT/NP/REP | R | 1 | | | | | |
| 2 | 2232-605-910-00 | LINK/FLOAT/NP ASSY | R | 1 | | | | | |
| 3 | 2232-605-007-10 | STAY/ANGLE | R | 1 | | | | | |
| 4 | 2232-605-210-40 | STAY/FLOAT/CENTER | R | 1 | | | | | |
| 5 | 2232-605-008-00 | PIN/12X82 | R | 1 | | | | | |
| 6 | V500-163-002-00 | PIN,SPLIT/3X20 | R | 1 | | | | | |
| 7 | 2232-605-240-10 | PLATE/LINK/SENSOR | R | 1 | | | | | |
| 8 | 2232-605-230-40 | ARM/EFLOATSENSE COMP | R | 1 | | | | | |
| 9 | 2137-330-004-00 | PIN,FLOAT | R | 1 | | | | | |
| 10 | 2161-735-006-00 | PIN/STOPPER/8 | R | 1 | | | | | |
| 11 | 2232-605-012-10 | ROD/LINK | R | 1 | | | | | |
| 12 | 2161-735-006-00 | PIN/STOPPER/8 | R | 1 | | | | | |
| 13 | 2232-605-011-10 | SPRING/HT018 | R | 1 | | | | | |
| 14 | 2232-605-006-20 | ROD/ANGLE | R | 1 | | | | | |
| 15 | V500-163-002-00 | PIN,SPLIT/3X20 | R | 1 | | | | | |
| 16 | 1560-695-021-00 | JOINT BALL M08RH | R | 1 | | | | | |
| 17 | 1560-695-022-00 | JOINT BALL M08LH | R | 1 | | | | | |
| 18 | V304-260-008-00 | NUT/M8 | R | 1 | | | | | |
| 19 | 1560-132-007-30 | NUT/LH/M08 | R | 1 | | | | | |
| 20 | 2232-605-016-20 | ROD/FLOAT | R | 1 | | | | | |
| 21 | V362-260-008-00 | NUT/WASHER/M8 | R | 2 | | | | | |
| 22 | 2232-616-220-20 | PLATE/CENTER/FLOAT | R | 1 | | | | | |
| 23 | 2232-605-017-00 | BOLT/SP/M10X25/G | R | 1 | | | | | |
| 24 | V120-364-001-00 | SCREW,SP/M4X10 | R | 2 | | | | | |
| 25 | 2232-605-010-10 | PLATE/SENSOR/FLOAT | R | 1 | | | | | |
| 26 | V360-260-006-00 | NUT/WASHER/M6 | R | 1 | | | | | |
| 27 | V500-163-002-00 | PIN,SPLIT/3X20 | R | 1 | | | | | |

# FIG.148 CLUTCH(SAFETY/NP)SET(REPAIR)

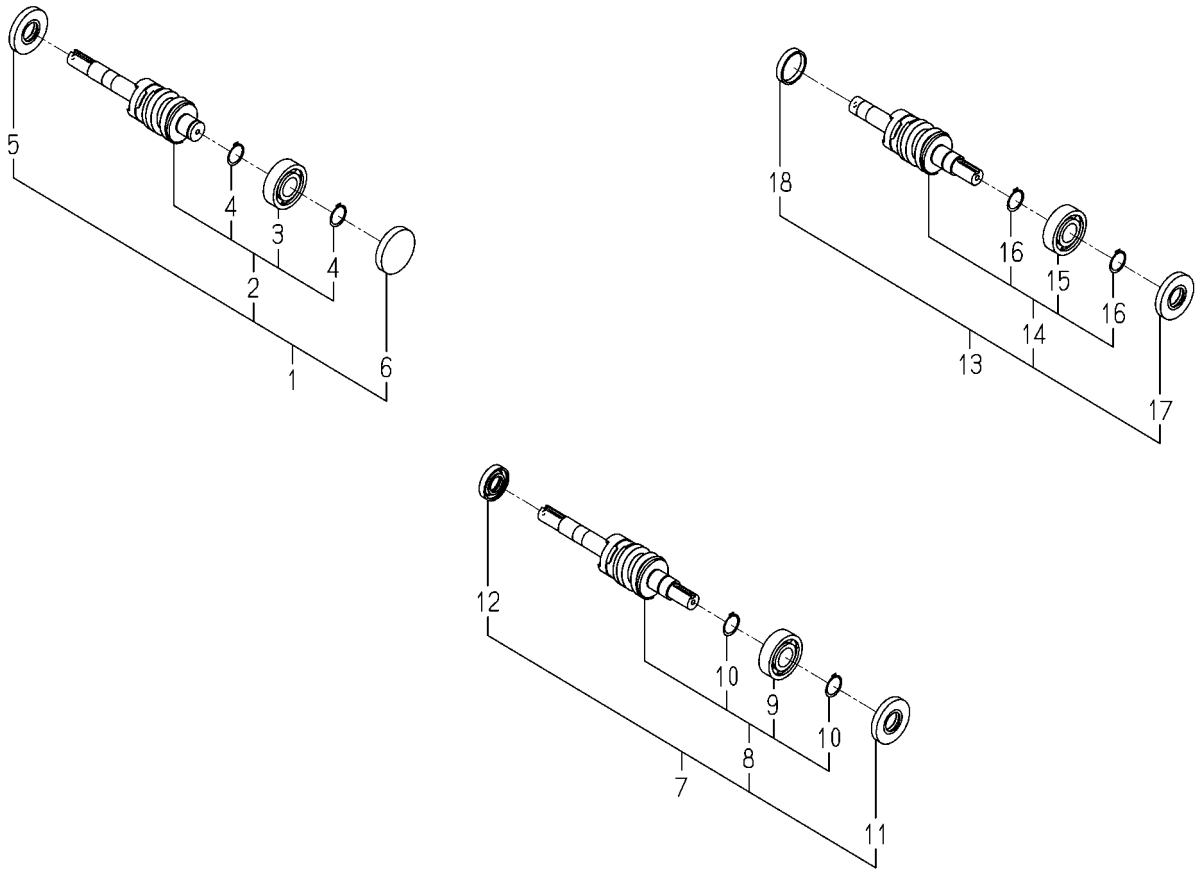


2232-701R-0100

| KEY | PART CODE | DESCRIPTION | SPC | TYPE OF MODEL NP80D E16 | | ITC | COL | GRP | REMARKS |
|---|---|---|---|---|---|---|---|---|---|
| 1 | 2232-701-300-00 | SAFETY CLUTCH/NP/LH | R | 1 | | | | | |
| 2 | 2232-701-310-00 | SAFETY CLUTCH/NP/LH | R | 1 | | | | | |
| 3 | V600-110-620-40 | BEARING,RB/6204 | R | 1 | | | | | |
| 4 | V704-140-020-00 | RING,SNAP/20 C | R | 2 | | | | | |
| 5 | V744-117-350-70 | SEAL,OIL/TC17357 | R | 1 | | | | | |
| 6 | 2194-701-010-00 | PLUG/47 | R | 1 | | | | | |
| 7 | 2232-701-320-00 | SAFETY CLUTCH/NP/CEN | R | 1 | | | | | |
| 8 | 2232-701-330-00 | SAFETY CLUTCH/NP/CEN | R | 1 | | | | | |
| 9 | V600-110-620-40 | BEARING,RB/6204 | R | 1 | | | | | |
| 10 | V704-140-020-00 | RING,SNAP/20 C | R | 2 | | | | | |
| 11 | V744-120-470-70 | SEAL,OIL/TC20477 | R | 1 | | | | | |
| 12 | V744-117-350-70 | SEAL,OIL/TC17357 | R | 1 | | | | | |
| 13 | 2232-701-340-00 | SAFETY CLUTCH/NP/RH | R | 1 | | | | | |
| 14 | 2232-701-350-00 | SAFETY CLUTCH/NP/RH | R | 1 | | | | | |
| 15 | V600-110-620-40 | BEARING,RB/6204 | R | 1 | | | | | |
| 16 | V704-140-020-00 | RING,SNAP/20 C | R | 2 | | | | | |
| 17 | V744-120-470-70 | SEAL,OIL/TC20477 | R | 1 | | | | | |
| 18 | 3737-211-007-00 | CAP/35 | R | 1 | | | | | |

# FIG.149 PLATE(BREAKWATER)SET(OPTION)

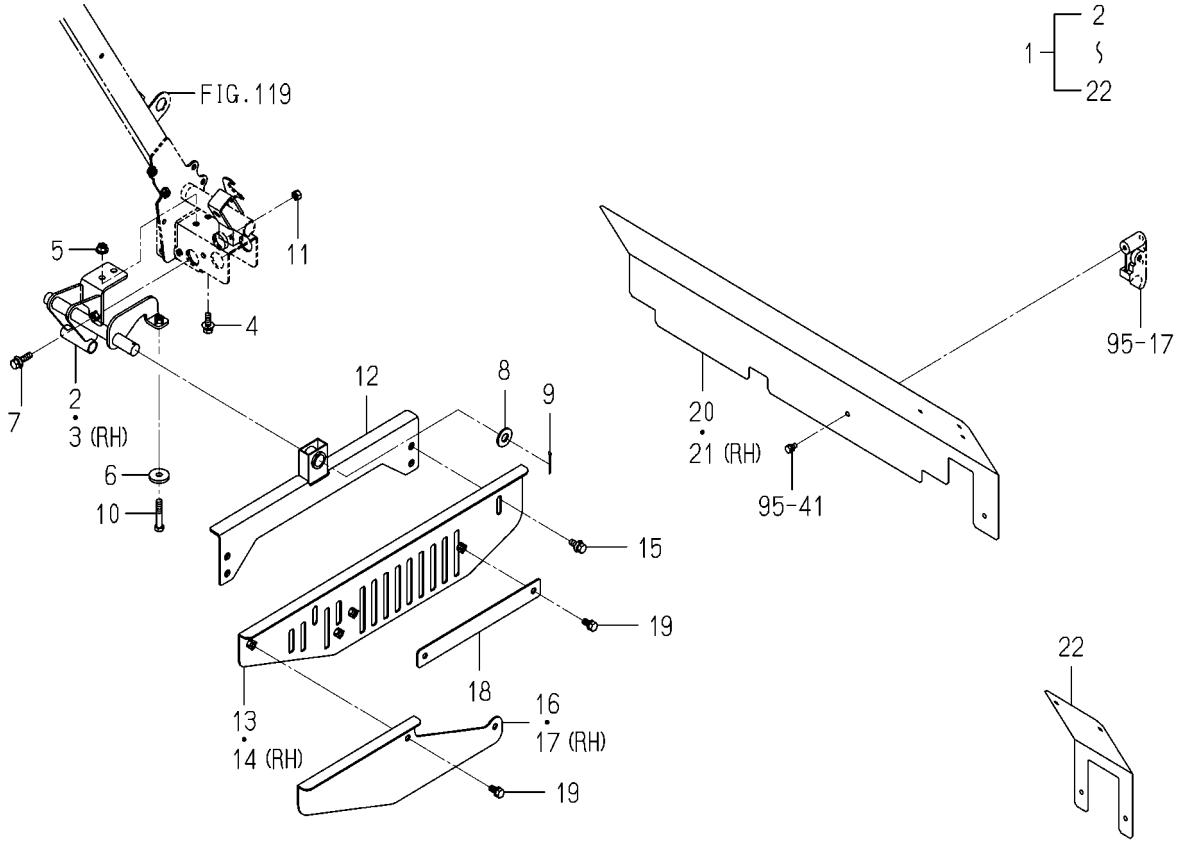


2233-715 -0100

| KEY | PART CODE | DESCRIPTION | SPC | TYPE OF MODEL NP80D E16 | | ITC | COL | GRP | REMARKS |
|---|---|---|---|---|---|---|---|---|---|
| 1 | 2233-715-500-00 | GUARDPLATE SET | T | 1 | | | | | |
| 2 | 2233-715-200-10 | STAY/GUARD PLATE/LH | T | 1 | | | | | |
| 3 | 2233-715-210-10 | STAY/GUARD PLATE/RH | T | 1 | | | | | |
| 4 | V211-360-802-50 | BOLT,SP/M8X25 | T | 4 | | | | | |
| 5 | V362-260-008-00 | NUT/WASHER/M8 | T | 4 | | | | | |
| 6 | 2132-161-005-00 | WASHER,PULLEY | T | 2 | | | | | |
| 7 | V211-360-803-00 | BOLT,SP/M8X30 | T | 2 | | | | | |
| 8 | 4502-205-021-00 | WASHER/18X29X02 | T | 2 | | | | | |
| 9 | V500-163-003-50 | PIN,SPLIT/3X35 | T | 2 | | | | | |
| 10 | V201-260-804-50 | BOLT/M8X45 | T | 2 | | | | | |
| 11 | V304-260-008-00 | NUT/M8 | T | 2 | | | | | |
| 12 | 2233-715-220-00 | HOLDER/GUARD PLATE | T | 2 | | | | | |
| 13 | 2213-715-350-00 | PLATE/GUARD/LH COMP | T | 1 | | | | | |
| 14 | 2213-715-360-00 | PLATE/GUARD/RH COMP | T | 1 | | | | | |
| 15 | V211-360-802-00 | BOLT,SP/M8X20 | T | 4 | | | | | |
| 16 | 2213-715-005-00 | PLATE/F/LH | T | 1 | | | | | |
| 17 | 2213-715-006-00 | PLATE/F/RH | T | 1 | | | | | |
| 18 | 2213-715-007-00 | PLATE/I/30X260 | T | 2 | | | | | |
| 19 | V211-260-801-60 | BOLT,S/M8X16 | T | 8 | | | | | |
| 20 | 2233-583-020-00 | COVER/ROTOR/8L/GUARD | T | 1 | | | | | |
| 21 | 2233-583-021-00 | COVER/ROTOR/8R/GUARD | T | 1 | | | | | |
| 22 | 2233-583-019-00 | COVER/ROTOR/8A/GUARD | T | 2 | | | | | |

# FIG.150 HOLDER(SEEDLING)(OPTION)

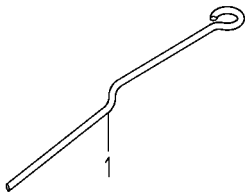


2212-738O-0100

| KEY | PART CODE | DESCRIPTION | SPC | TYPE OF MODEL NP80D E16 | | ITC | COL | GRP | REMARKS |
|---|---|---|---|---|---|---|---|---|---|
| 1 | 2212-738-001-00 | SEEDLINGHOLDER | T | 1 | | | | | |

# FIG.151 COVER(HOPPER/NP80)(F TYPE)(OPTION)

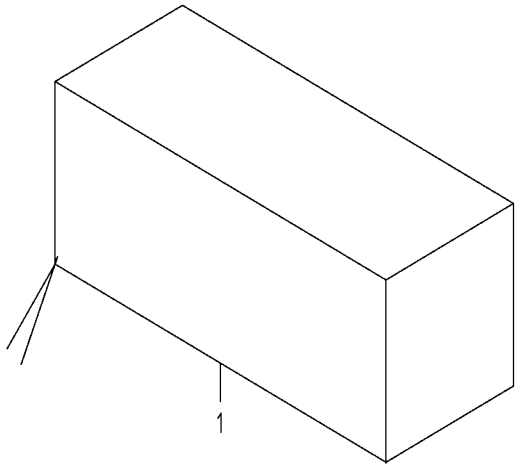


2233-938 -0100

| KEY | PART CODE | DESCRIPTION | SPC | TYPE OF MODEL NP80D E16 | | ITC | COL | GRP | REMARKS |
|---|---|---|---|---|---|---|---|---|---|
| 1 | 2233-938-001-00 | COVER/HOPPER/NP80 | T | 2 | | | | | |

# FIG.152 COMPONENT PARTS FOR K116-029-000-60 ON Fig.106

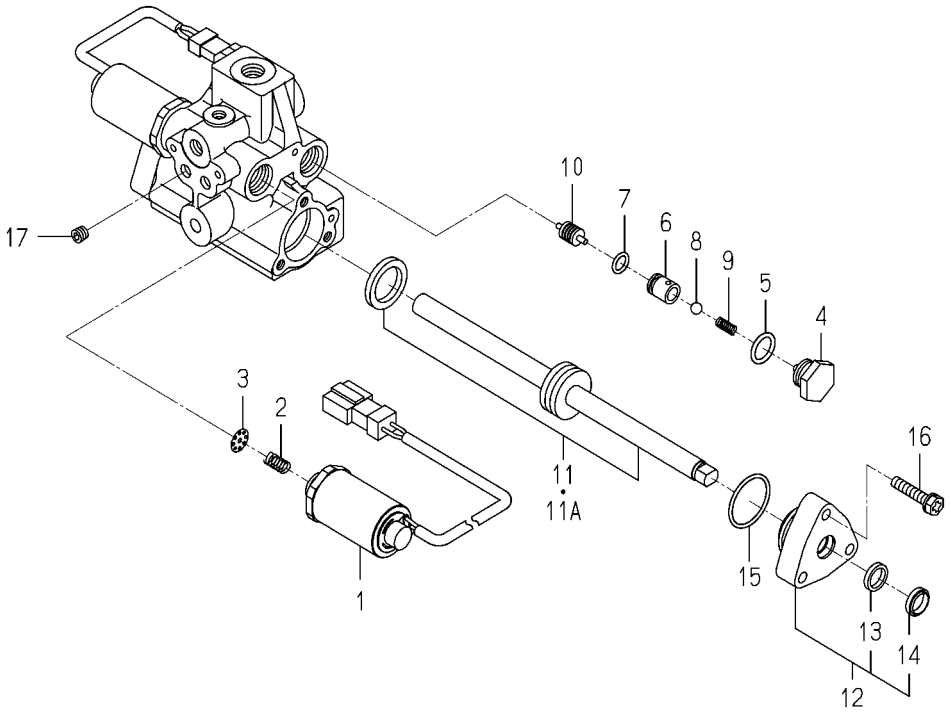


K116-029-000-6J

| KEY | PART CODE | DESCRIPTION | SPC | TYPE OF MODEL NP80D E16 | | ITC | COL | GRP | REMARKS |
|---|---|---|---|---|---|---|---|---|---|
| 1 | K116-024-200-00 | SOLENOID SET | * | 2 | | | | | |
| 2 | K116-024-003-00 | SPRING | * | 2 | | | | | |
| 3 | K116-024-004-00 | COLLAR | * | 2 | | | | | |
| 4 | K116-024-005-00 | PLUG | * | 2 | | | | | |
| 5 | V720-112-401-40 | O-RING/1B,P14 | * | 2 | | | | | |
| 6 | K116-024-006-20 | COLLAR/CHECK | * | 2 | | | | | |
| 7 | V720-111-900-90 | O-RING/1B,P9 | * | 2 | | | | | |
| 8 | V682-200-000-80 | BALL,STEEL | * | 2 | | | | | |
| 9 | K116-024-007-00 | SPRING | * | 2 | | | | | |
| 10 | K116-024-008-10 | SPOOL | * | 1 | | | | | |
| 11 | K116-029-400-00 | ROD/PISTON/029 SET | * | 1 -80 | | | | | |
| 11A | K116-029-400-10 | ROD/PISTON/029 SET | * | 1 81- | | 1 | | | |
| 12 | K116-029-300-00 | COVER,ROD | * | 2 | | | | | |
| 13 | V724-122-901-20 | PACKING,ROD | * | 2 | | | | | |
| 14 | V793-112-160-40 | SEAL,DUST | * | 2 | | | | | |
| 15 | V723-112-002-90 | O-RING/1B,S29 | * | 2 | | | | | |
| 16 | V210-560-603-00 | BOLT,S/M6X30/7T | * | 6 | | | | | |
| 17 | V780-140-000-1T | PLUG/SCREW/SEAL | * | 7 | | | | | |

# FIG.153 COMPONENT PARTS FOR K510-022-000-00 ON Fig.8

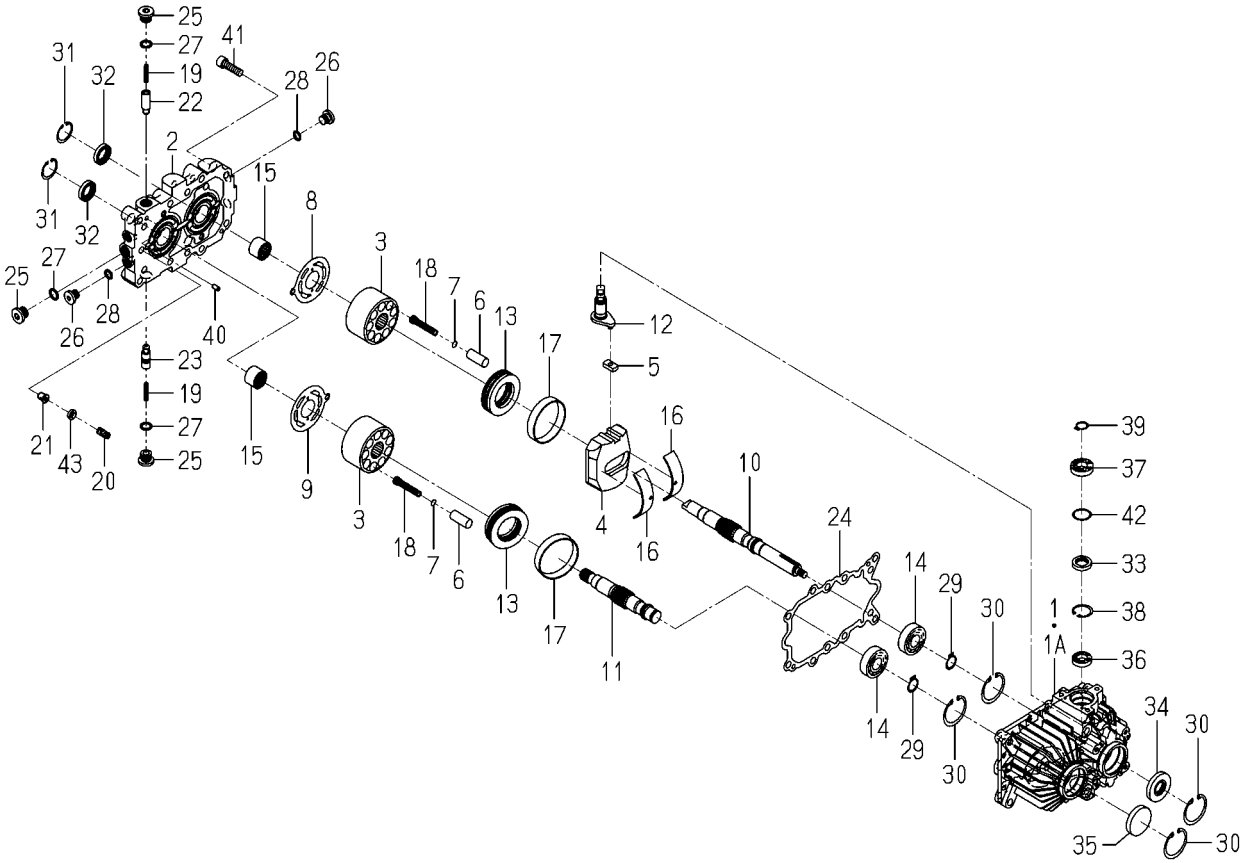


K510-022-000-0G

| KEY | PART CODE | DESCRIPTION | SPC | TYPE OF MODEL NP80D E16 | | ITC | COL | GRP | REMARKS |
|---|---|---|---|---|---|---|---|---|---|
| 1 | K510-022-001-00 | CASE/HMS1/022 | * | 1 -275 | | | | | |
| 1A | K510-027-001-00 | CASE/HMS1/027 | * | 1 276- | | | | | |
| 2 | K510-022-004-00 | BLOCK/PORT/HMS1/022 | * | 1 | | | | | |
| 3 | K510-019-005-10 | BLOCK/CYLINDER/23CC | * | 2 | | | | | |
| 4 | K510-010-006-10 | PLATE/SWASH | * | 1 | | | | | |
| 5 | K510-001-007-00 | METAL/SLIDE | * | 1 | | | | | |
| 6 | K510-006-008-00 | PISTON | * | 18 | | | | | |
| 7 | K510-010-009-00 | SHIM/1.8 | * | 18 | | | | | |
| 8 | K510-001-010-00 | PLATE/VALVE/PUMP | * | 1 | | | | | |
| 9 | K510-001-011-00 | PLATE/VALVE/MOTOR | * | 1 | | | | | |
| 10 | K510-006-012-30 | SHAFT/PUMP | * | 1 | | | | | |
| 11 | K510-001-013-20 | SHAFT/MOTOR | * | 1 | | | | | |
| 12 | K510-006-014-00 | ARM/TRUNNION/HMS1/00 | * | 1 | | | | | |
| 13 | K510-001-015-00 | BEARING/THRUST | * | 2 | | | | | |
| 14 | V600-110-620-40 | BEARING,RB/6204 | * | 2 | | | | | |
| 15 | K510-001-016-00 | NEEDLE | * | 2 | | | | | |
| 16 | K510-001-017-00 | BUSH/95X100X22 | * | 2 | | | | | |
| 17 | K510-001-018-00 | BUSH/68X71X14 | * | 2 | | | | | |
| 18 | K510-001-019-00 | SPRING/HC053 | * | 18 | | | | | |
| 19 | K510-001-020-00 | SPRING/HC030 | * | 2 | | | | | |
| 20 | K510-003-021-00 | SPRING/HC021 | * | 1 | | | | | |
| 21 | K510-003-022-00 | POPPET/RELIEF | * | 1 | | | | | |
| 22 | K500-001-023-00 | POPPET/CHECK | * | 1 | | | | | |
| 23 | K510-001-024-00 | POPPET(CHECK/1.6) | * | 1 | | | | | |
| 24 | K510-001-026-00 | GASKET | * | 1 | | | | | |
| 25 | K510-001-029-00 | PLUG(G3/8) | * | 3 | | | | | |
| 26 | K275-001-003-00 | PLUG(PF1/4) | * | 4 | | | | | |
| 27 | V720-112-401-40 | O-RING/1B,P14 | * | 3 | | | | | |
| 28 | V720-112-401-10 | O-RING/1B,P11 | * | 4 | | | | | |
| 29 | V704-140-020-00 | RING,SNAP/20 C | * | 2 | | | | | |

# FIG.153 COMPONENT PARTS FOR K510-022-000-00 ON Fig.8

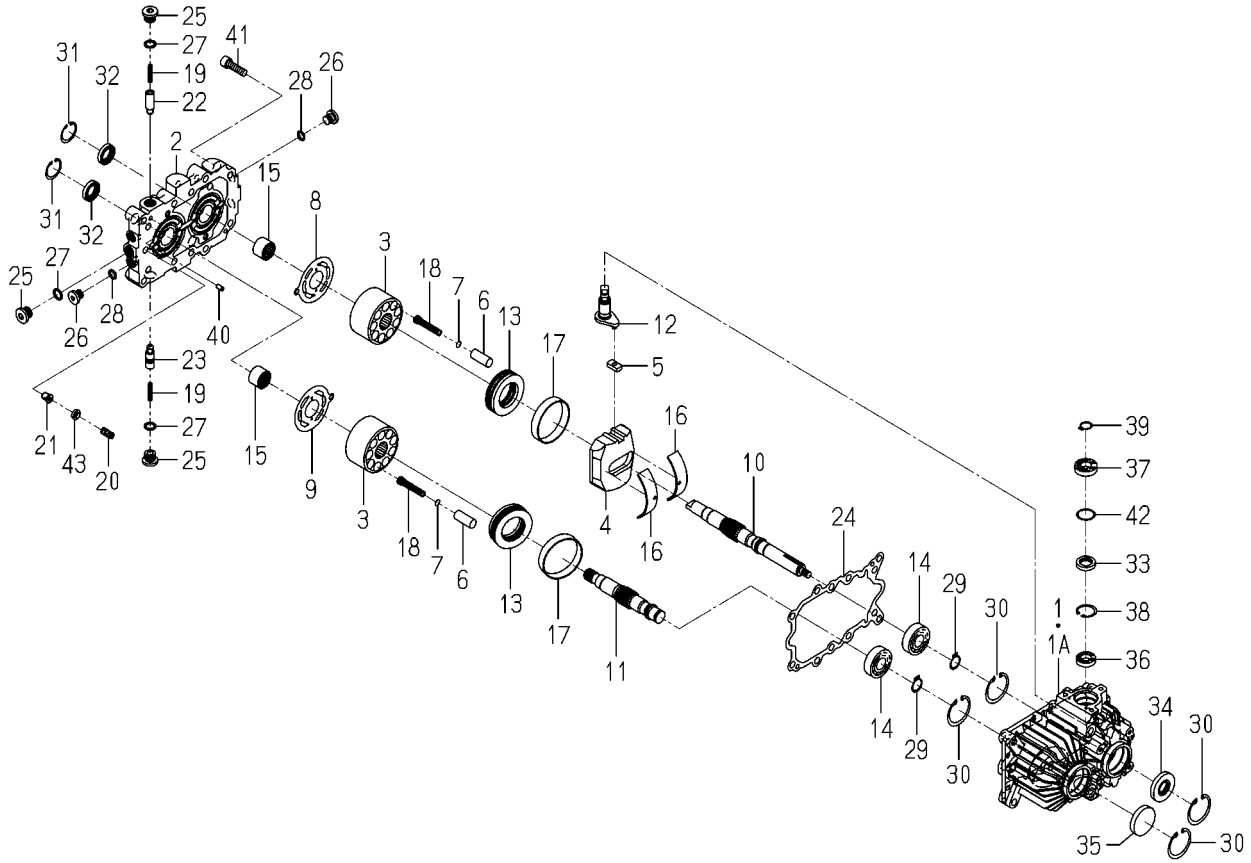


K510-022-000-0G

| KEY | PART CODE | DESCRIPTION | SPC | TYPE OF MODEL NP80D E16 | | ITC | COL | GRP | REMARKS |
|---|---|---|---|---|---|---|---|---|---|
| 30 | V705-140-047-00 | RING,SNAP/47 C | * | 4 | | | | | |
| 31 | V705-140-032-00 | RING,SNAP/32 C | * | 2 | | | | | |
| 32 | K510-001-039-00 | OIL SEAL | * | 2 | | | | | |
| 33 | K510-001-031-00 | SEAL/OIL | * | 1 | | | | | |
| 34 | V744-120-470-70 | SEAL,OIL/TC20477 | * | 1 | | | | | |
| 35 | 1421-201-002-00 | SEAL/47 | * | 1 | | | | | |
| 36 | K510-017-047-00 | BEARING,RB/6903 | * | 1 | | | | | |
| 37 | K510-017-048-00 | BEARING,RB/6003SS | * | 1 | | | | | |
| 38 | V705-140-030-00 | RING,SNAP/30 C | * | 1 | | | | | |
| 39 | V704-140-017-00 | RING,SNAP/17 C | * | 1 | | | | | |
| 40 | K510-001-036-00 | PIN,ST | * | 4 | | | | | |
| 41 | V220-541-003-50 | SCREW,SOCKET/M10X35 | * | 8 | | | | | |
| 42 | K510-001-034-00 | WASHER/25X30X1 | * | 1 | | | | | |
| 43 | K510-003-037-00 | PLATE/SPRING | * | 1 | | | | | |

# FIG.154 COMPONENT PARTS FOR 2204-738-450-30 ON Fig.124

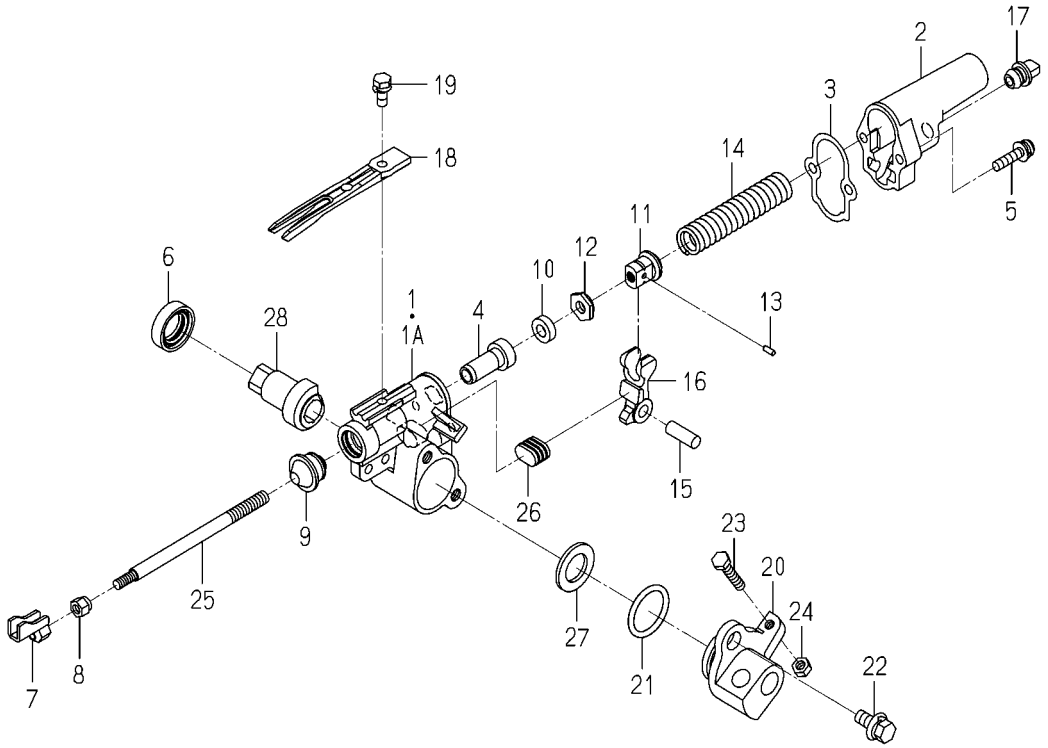


2204-738-450-3D

| KEY | PART CODE | DESCRIPTION | SPC | TYPE OF MODEL NP80D E16 | | ITC | COL | GRP | REMARKS |
|---|---|---|---|---|---|---|---|---|---|
| 1 | 2213-738-301-30 | ARM,PLANTING/E/LH | * | 8 -107 | | | 4L | | |
| 1A | 2213-738-301-40 | ARM,PLANTING/LH/E | * | 8 108- | | 1 | 4L | | |
| 2 | 2204-738-412-10 | COVER/PLANTING/PZ/E | * | 8 | | | | | |
| 3 | 2142-736-235-00 | GASKET | * | 8 | | | | | |
| 4 | 2204-738-304-20 | BUSH/08X18X36 | * | 8 | | | | | |
| 5 | V120-366-003-00 | SCREW,SP/M6X30 | * | 16 | | | | | |
| 6 | 2161-738-222-00 | SEAL,OIL | * | 8 | | | | | |
| 7 | 2204-738-240-20 | FROK/PLANT COMP | * | 8 | | | | | |
| 8 | 2204-738-004-00 | LOCKNUT | * | 8 | | | | | |
| 9 | 2232-738-304-00 | PLANTINGSEAL | * | 8 | | | | | |
| 10 | 2703-501-006-00 | CUSHION | * | 8 | | | | | |
| 11 | 2204-738-414-10 | PUSHINGOUTNUT/E | * | 8 | | | | | |
| 12 | 2703-501-008-00 | NUT,LOCK PUSH OUT | * | 8 | | | | | |
| 13 | V523-100-300-80 | PIN,ST,B/3X8 | * | 8 | | | | | |
| 14 | 2204-738-413-10 | SPRING/HC086 | * | 8 | | | | | |
| 15 | 2142-736-239-00 | PIN,ARM PUSH-OUT | * | 8 | | | | | |
| 16 | 2204-738-318-10 | ARM/PUSH-OUT/PZ | * | 8 | | | | | |
| 17 | 2204-738-001-10 | CAP/YELLOW/10/KNOB | * | 8 | | | | | |
| 18 | 2186-740-033-20 | FINGER/14/G | * | 8 | | | | | |
| 19 | 2204-738-059-00 | BOLT/M6X16 | * | 8 | | | | | |
| 20 | 2204-738-312-00 | HUB/PLANTING ARM | * | 8 | | | 4L | | |
| 21 | V720-103-502-80 | O-RING/1A,P28 | * | 8 | | | | | |
| 22 | 2186-738-059-00 | BOLT/M8X20/SP/S | * | 16 | | | | | |
| 23 | V200-700-603-00 | BOLT,SUS/M6X30 | * | 8 | | | | | |
| 24 | V301-700-006-00 | NUT,SUS/M6 | * | 8 | | | | | |
| 25 | 2204-738-005-00 | SHAFT/FORK/PLANTING/ | * | 8 | | | | | |
| 26 | 2204-738-319-00 | CUSHION/ARM/PZ | * | 8 | | | | | |
| 27 | 2204-738-325-00 | WASHER/M18 | * | 8 | | | | | |
| 28 | 2204-738-307-00 | CAM/PUSHED OUT/LH | * | 8 | | | | | |
| | | | | | | | | | |

# FIG.155 COMPONENT PARTS FOR 2204-739-450-30 ON Fig.125

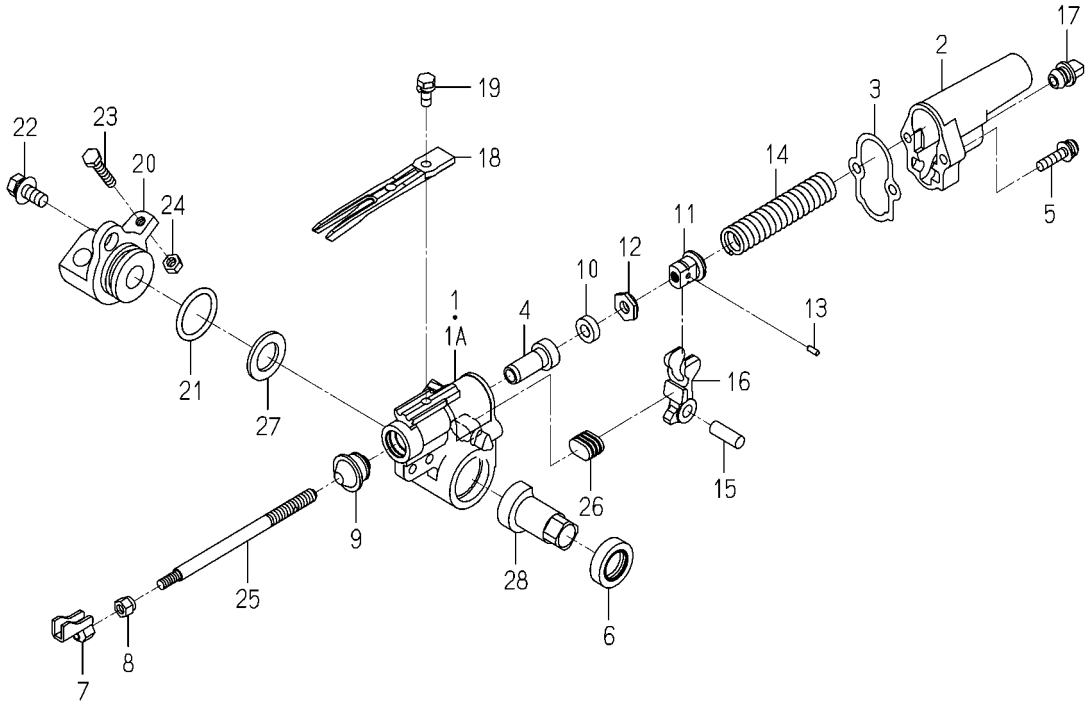


2204-739-450-3D

| KEY | PART CODE | DESCRIPTION | SPC | TYPE OF MODEL NP80D E16 | | ITC | COL | GRP | REMARKS |
|---|---|---|---|---|---|---|---|---|---|
| 1 | 2213-739-301-30 | ARM,PLANTING/E/RH | * | 8 -107 | | | 4L | | |
| 1A | 2213-739-301-40 | ARM,PLANTING/RH/E | * | 8 108- | | 1 | 4L | | |
| 2 | 2204-738-412-10 | COVER/PLANTING/PZ/E | * | 8 | | | | | |
| 3 | 2142-736-235-00 | GASKET | * | 8 | | | | | |
| 4 | 2204-738-304-20 | BUSH/08X18X36 | * | 8 | | | | | |
| 5 | V120-366-003-00 | SCREW,SP/M6X30 | * | 16 | | | | | |
| 6 | 2161-738-222-00 | SEAL,OIL | * | 8 | | | | | |
| 7 | 2204-738-240-20 | FROK/PLANT COMP | * | 8 | | | | | |
| 8 | 2204-738-004-00 | LOCKNUT | * | 8 | | | | | |
| 9 | 2232-738-304-00 | PLANTINGSEAL | * | 8 | | | | | |
| 10 | 2703-501-006-00 | CUSHION | * | 8 | | | | | |
| 11 | 2204-738-414-10 | PUSHINGOUTNUT/E | * | 8 | | | | | |
| 12 | 2703-501-008-00 | NUT,LOCK PUSH OUT | * | 8 | | | | | |
| 13 | V523-100-300-80 | PIN,ST,B/3X8 | * | 8 | | | | | |
| 14 | 2204-738-413-10 | SPRING/HC086 | * | 8 | | | | | |
| 15 | 2142-736-239-00 | PIN,ARM PUSH-OUT | * | 8 | | | | | |
| 16 | 2204-738-318-10 | ARM/PUSH-OUT/PZ | * | 8 | | | | | |
| 17 | 2204-738-001-10 | CAP/YELLOW/10/KNOB | * | 8 | | | | | |
| 18 | 2186-740-033-20 | FINGER/14/G | * | 8 | | | | | |
| 19 | 2204-738-059-00 | BOLT/M6X16 | * | 8 | | | | | |
| 20 | 2204-738-312-00 | HUB/PLANTING ARM | * | 8 | | | 4L | | |
| 21 | V720-103-502-80 | O-RING/1A,P28 | * | 8 | | | | | |
| 22 | 2186-738-059-00 | BOLT/M8X20/SP/S | * | 16 | | | | | |
| 23 | V200-700-603-00 | BOLT,SUS/M6X30 | * | 8 | | | | | |
| 24 | V301-700-006-00 | NUT,SUS/M6 | * | 8 | | | | | |
| 25 | 2204-738-005-00 | SHAFT/FORK/PLANTING/ | * | 8 | | | | | |
| 26 | 2204-738-319-00 | CUSHION/ARM/PZ | * | 8 | | | | | |
| 27 | 2204-738-325-00 | WASHER/M18 | * | 8 | | | | | |
| 28 | 2204-739-307-00 | CAM/PUSHED OUT/RH | * | 8 | | | | | |
| | | | | | | | | | |

# FIG.156 COMPONENT PARTS FOR 2233-207-250-40 ON Fig.15

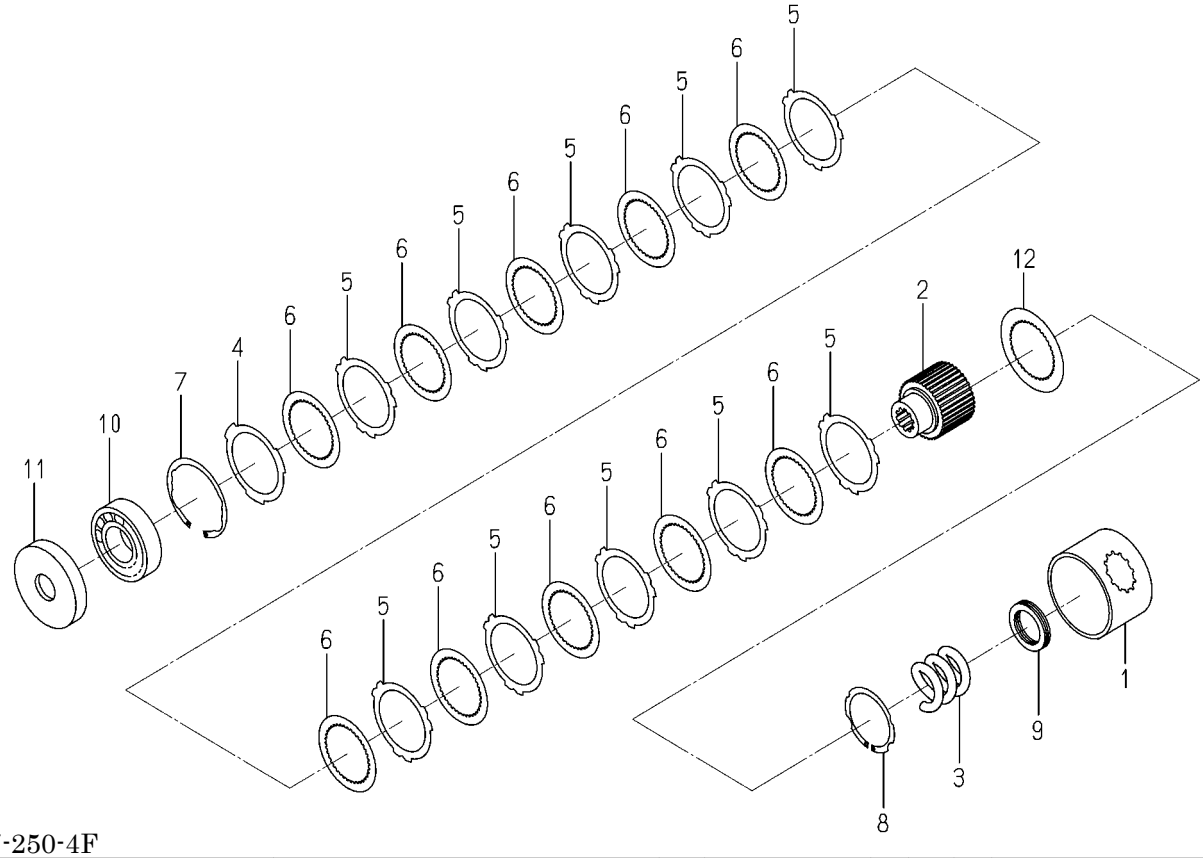


2233-207-250-4F

| KEY | PART CODE | DESCRIPTION | SPC | TYPE OF MODEL NP80D E16 | | ITC | COL | GRP | REMARKS |
|---|---|---|---|---|---|---|---|---|---|
| 1 | 2233-207-251-00 | CASE | * | 2 | | | | | |
| 2 | 2232-207-202-00 | SPLINEBOSS | * | 2 | | | | | |
| 3 | 2232-207-203-00 | SPRING | * | 2 | | | | | |
| 4 | 2232-207-204-00 | PLATE/1.6 | * | 2 | | | | | |
| 5 | 2232-207-205-00 | PLATE/0.8 | * | 20 | | | | | |
| 6 | 2232-207-206-00 | DISC | * | 20 | | | | | |
| 7 | 2232-207-207-00 | SNAPRING/HOLE | * | 2 | | | | | |
| 8 | 2232-207-208-00 | SNAPRING/SHAFT | * | 2 | | | | | |
| 9 | 2232-207-209-00 | THRUSTCOLLAR | * | 2 | | | | | |
| 10 | 2232-207-211-00 | BEARINGBALL | * | 2 | | | | | |
| 11 | 2232-207-212-00 | BEARINGCOVER | * | 2 | | | | | |
| 12 | 2232-207-213-00 | PLATESPLINE1.6 | * | 2 | | | | | |

# FIG.157 COMPONENT PARTS FOR 2233-688-250-90 ON Fig.114

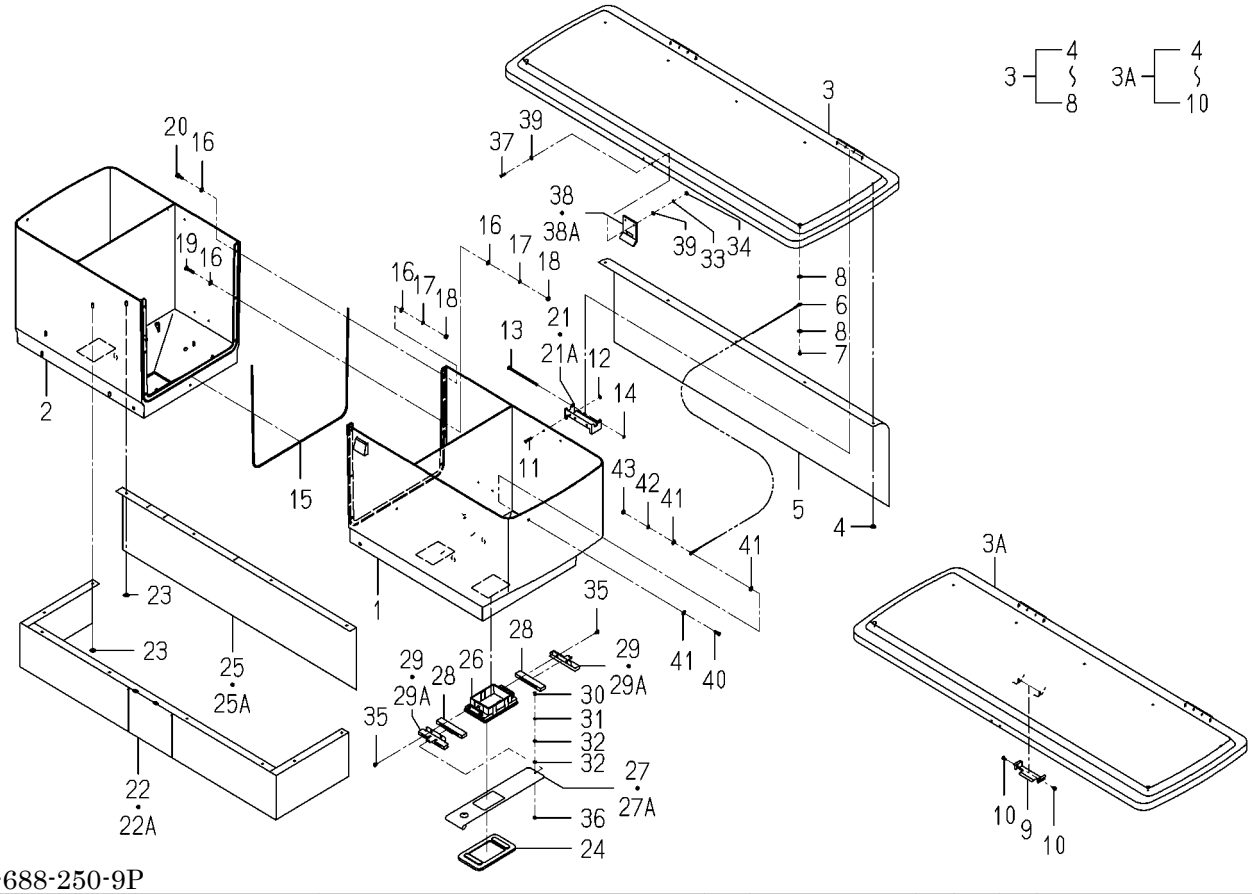


2233-688-250-9P

| KEY | PART CODE | DESCRIPTION | SPC | TYPE OF MODEL NP80D E16 | | ITC | COL | GRP | REMARKS |
|---|---|---|---|---|---|---|---|---|---|
| 1 | 2233-688-005-10 | HOPPER/2/LH/8/OUT | * | 1 | | | | | |
| 2 | 2233-688-002-10 | HOPPER/2/RH/8 | * | 1 | | | | | |
| 3 | 2233-688-260-20 | COVER/HOPPER/4 ASSY | * | 1 -80 | | | | | |
| 3A | 2233-688-280-10 | COVER/HOPPER/4/LH | * | 1 81- | | 1 | | | |
| 4 | 2151-250-003-00 | NUT,SPEED/4 | * | 5 | | | | | |
| 5 | 2233-688-007-00 | SHEET/HOPPER/8 | * | 1 | | | | | |
| 6 | 2232-687-007-00 | CABLE/HOPPER/NP/F | * | 2 | | | | | |
| 7 | 8841-716-009-00 | PIN/+ | * | 2 | | | | | |
| 8 | V411-700-004-00 | WASHER,PL/M4 | * | 4 | | | | | |
| 9 | 2232-686-024-00 | HOOK/BRUSH | * | 1 81- | | | | | |
| 10 | 8841-716-009-00 | PIN/+ | * | 2 81- | | | | | |
| 11 | 8836-730-215-00 | RIVET/BLIND/0 | * | 4 | | | | | |
| 12 | V411-700-003-00 | WASHER,PL/M3 | * | 4 | | | | | |
| 13 | 2232-686-016-00 | PIN/04X86 | * | 2 | | | | | |
| 14 | 2145-770-214-00 | RING, SNAP | * | 2 | | | | | |
| 15 | 2233-688-009-00 | PACKING/HOPPER/8 | * | 1 | | | | | |
| 16 | V411-700-004-00 | WASHER,PL/M4 | * | 14 | | | | | |
| 17 | V401-700-004-00 | WASHER,SP/M4 | * | 7 | | | | | |
| 18 | V301-700-004-00 | NUT,SUS/M4 | * | 7 | | | | | |
| 19 | 8841-716-011-00 | BOLT/M4X20/SUS | * | 4 | | | | | |
| 20 | 8836-730-216-00 | BOLT/M4X14/SUS | * | 3 | | | | | |
| 21 | 2233-688-017-00 | HING/HOPPER/8 | * | 2 -80 | | | | | |
| 21A | 2232-686-004-20 | HING/HOPPER | * | 2 81- | | | | | |
| 22 | 2233-688-016-10 | SHEET/HOPPER/8/LOWER | * | 1 -80 | | | | | |
| 22A | 2233-688-016-20 | SHEET/HOPPER/8/LOWER | * | 1 81- | | 1 | | | |
| 23 | 2151-250-003-00 | NUT,SPEED/4 | * | 12 | | | | | |
| 24 | 2232-686-012-10 | GASKET/HOPPER | * | 4 | | | | | |
| 25 | 2233-688-008-00 | SHEET/HOPPER/8/REAR | * | 1 -80 | | | | | |
| 25A | 2233-688-008-10 | SHEET/HOPPER/8/REAR | * | 1 81- | | 1 | | | |
| 26 | 2232-686-019-20 | HOPPERGUIDE | * | 4 | | | | | |

# FIG.157 COMPONENT PARTS FOR 2233-688-250-90 ON Fig.114

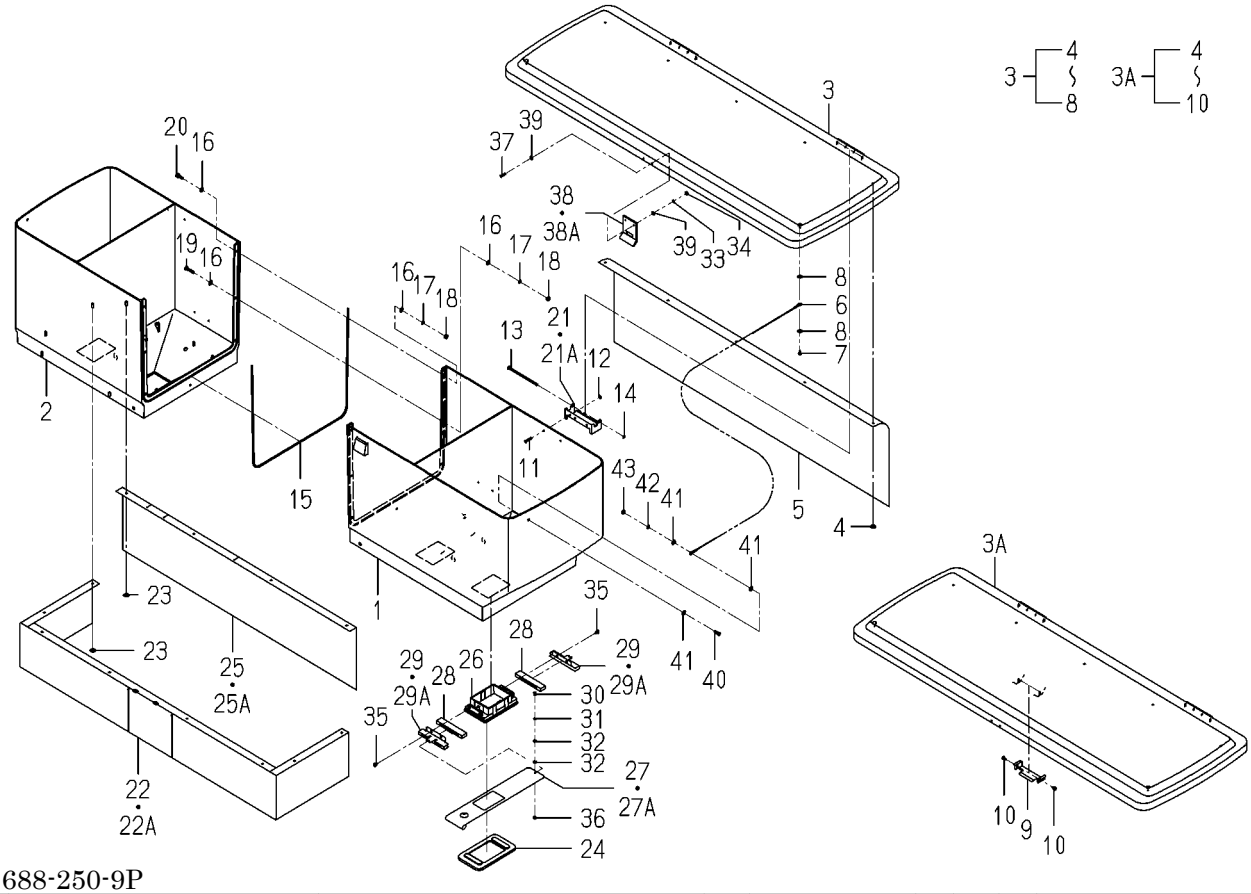


2233-688-250-9P

| KEY | PART CODE | DESCRIPTION | SPC | TYPE OF MODEL NP80D E16 | | ITC | COL | GRP | REMARKS |
|---|---|---|---|---|---|---|---|---|---|
| 27 | 2232-686-020-60 | SHUTTER | * | 4 -150 | | | | | |
| 27A | 2232-686-020-70 | SHUTTER | * | 4 151- | | 1 | | | |
| 28 | 2232-686-021-30 | PACKING/SHUTTER | * | 8 | | | | | |
| 29 | 2232-686-023-10 | PLATE/SHUTTERCOVER | * | 8 -80 | | | | | |
| 29A | 2232-686-023-20 | PLATE/SHUTTERCOVER | * | 8 81- | | 1 | | | |
| 30 | V111-703-000-60 | SCREW/M3X6 | * | 4 | | | | | |
| 31 | V401-700-003-00 | WASHER,SP/M3 | * | 4 | | | | | |
| 32 | V411-700-003-00 | WASHER,PL/M3 | * | 8 | | | | | |
| 33 | V401-700-003-00 | WASHER,SP/M3 | * | 2 | | | | | |
| 34 | V301-700-003-00 | NUT,SUS/M3 | * | 2 | | | | | |
| 35 | 2150-761-005-00 | SCREW/TAPPING | * | 16 | | | | | |
| 36 | V301-700-003-00 | NUT,SUS/M3 | * | 4 | | | | | |
| 37 | V111-703-001-20 | SCREW/M3X12 | * | 2 | | | | | |
| 38 | 2232-686-010-10 | HOOK,HOPPER | * | 1 -80 | | | | | |
| 38A | 2232-686-010-20 | HOPPERHOOK | * | 1 81- | | 1 | | | |
| 39 | V411-700-003-00 | WASHER,PL/M3 | * | 4 | | | | | |
| 40 | V111-164-001-20 | SCREW/M4X12 | * | 2 | | | | | |
| 41 | V411-700-004-00 | WASHER,PL/M4 | * | 6 | | | | | |
| 42 | V401-700-004-00 | WASHER,SP/M4 | * | 2 | | | | | |
| 43 | V301-700-004-00 | NUT,SUS/M4 | * | 2 | | | | | |

# FIG.158 COMPONENT PARTS FOR 2233-688-270-90 ON Fig.114

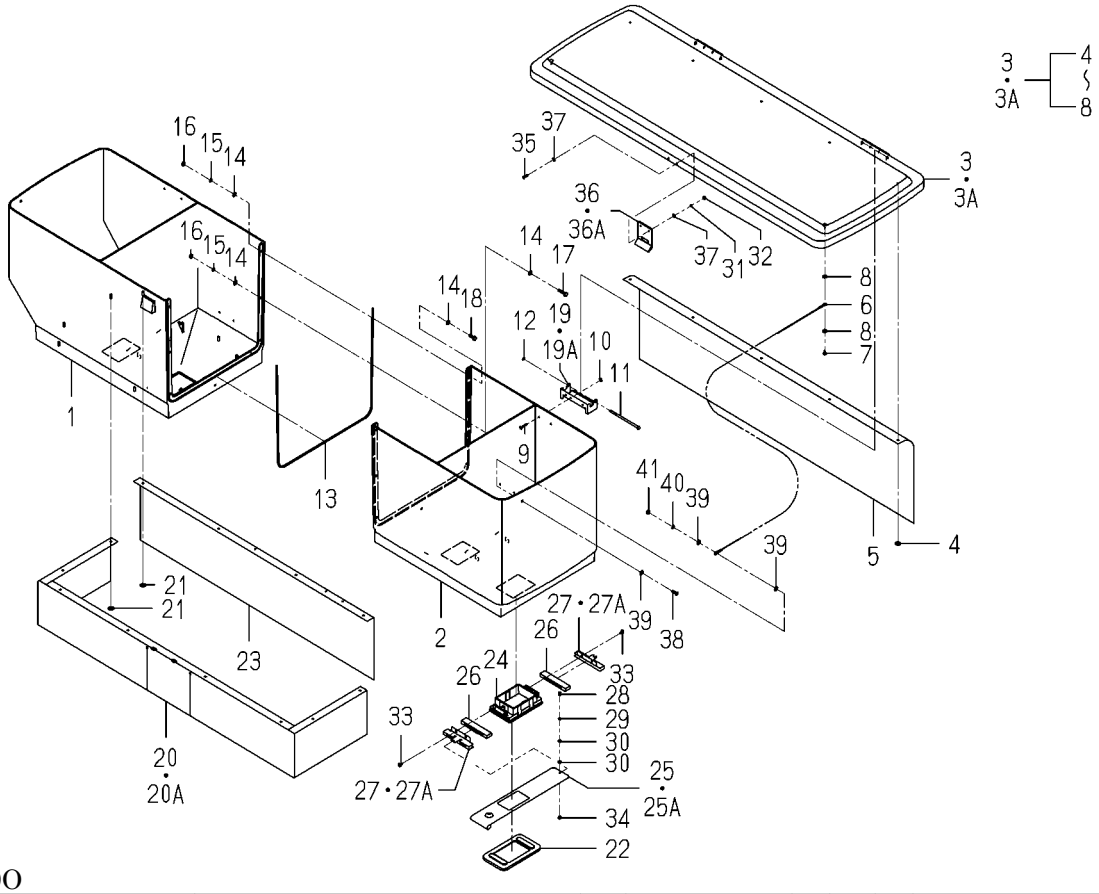


2233-688-270-90

| KEY | PART CODE | DESCRIPTION | SPC | TYPE OF MODEL NP80D E16 | | ITC | COL | GRP | REMARKS |
|---|---|---|---|---|---|---|---|---|---|
| 1 | 2233-688-006-10 | HOPPER/2/RH/8/OUT | * | 1 | | | | | |
| 2 | 2233-688-001-10 | HOPPER/2/LH/8 | * | 1 | | | | | |
| 3 | 2233-688-260-20 | COVER/HOPPER/4 ASSY | * | 1 -80 | | | | | |
| 3A | 2233-688-260-30 | COVER/HOPPER/4 ASSY | * | 1 81- | | 1 | | | |
| 4 | 2151-250-003-00 | NUT,SPEED/4 | * | 5 | | | | | |
| 5 | 2233-688-007-00 | SHEET/HOPPER/8 | * | 1 | | | | | |
| 6 | 2232-687-007-00 | CABLE/HOPPER/NP/F | * | 2 | | | | | |
| 7 | 8841-716-009-00 | PIN/+ | * | 2 | | | | | |
| 8 | V411-700-004-00 | WASHER,PL/M4 | * | 4 | | | | | |
| 9 | 8836-730-215-00 | RIVET/BLIND/0 | * | 4 | | | | | |
| 10 | V411-700-003-00 | WASHER,PL/M3 | * | 4 | | | | | |
| 11 | 2232-686-016-00 | PIN/04X86 | * | 2 | | | | | |
| 12 | 2145-770-214-00 | RING, SNAP | * | 2 | | | | | |
| 13 | 2233-688-009-00 | PACKING/HOPPER/8 | * | 1 | | | | | |
| 14 | V411-700-004-00 | WASHER,PL/M4 | * | 14 | | | | | |
| 15 | V401-700-004-00 | WASHER,SP/M4 | * | 7 | | | | | |
| 16 | V301-700-004-00 | NUT,SUS/M4 | * | 7 | | | | | |
| 17 | 8841-716-011-00 | BOLT/M4X20/SUS | * | 4 | | | | | |
| 18 | 8836-730-216-00 | BOLT/M4X14/SUS | * | 3 | | | | | |
| 19 | 2233-688-017-00 | HING/HOPPER/8 | * | 2 -80 | | | | | |
| 19A | 2232-686-004-20 | HING/HOPPER | * | 2 81- | | | | | |
| 20 | 2233-688-016-10 | SHEET/HOPPER/8/LOWER | * | 1 -80 | | | | | |
| 20A | 2233-688-016-20 | SHEET/HOPPER/8/LOWER | * | 1 81- | | 1 | | | |
| 21 | 2151-250-003-00 | NUT,SPEED/4 | * | 12 | | | | | |
| 22 | 2232-686-012-10 | GASKET/HOPPER | * | 4 | | | | | |
| 23 | 2233-688-019-00 | SHEET/HOPPER/8RH/REA | * | 1 | | | | | |
| 24 | 2232-686-019-20 | HOPPERGUIDE | * | 4 | | | | | |
| 25 | 2232-686-020-60 | SHUTTER | * | 4 -150 | | | | | |
| 25A | 2232-686-020-70 | SHUTTER | * | 4 151- | | 1 | | | |
| 26 | 2232-686-021-30 | PACKING/SHUTTER | * | 8 | | | | | |

# FIG.158 COMPONENT PARTS FOR 2233-688-270-90 ON Fig.114

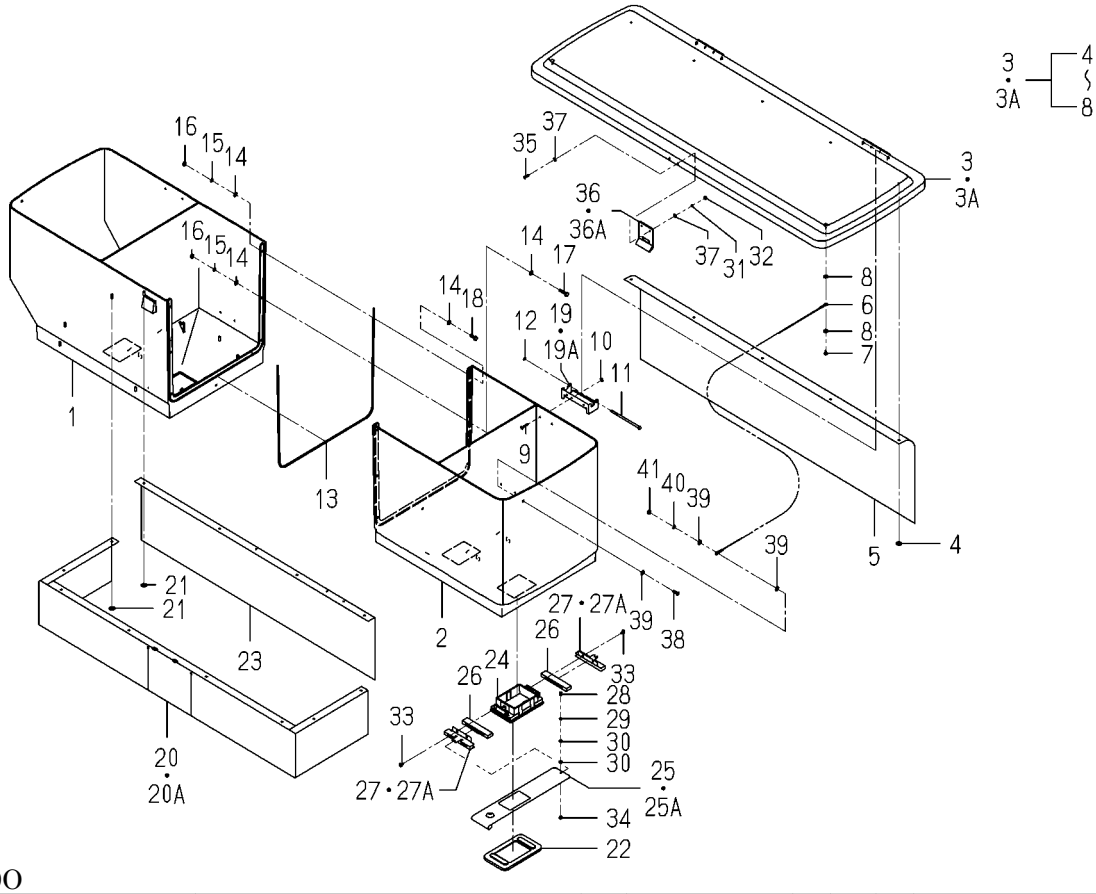


2233-688-270-90

| KEY | PART CODE | DESCRIPTION | SPC | TYPE OF MODEL NP80D E16 | | ITC | COL | GRP | REMARKS |
|---|---|---|---|---|---|---|---|---|---|
| 27 | 2232-686-023-10 | PLATE/SHUTTERCOVER | * | 8 -80 | | | | | |
| 27A | 2232-686-023-20 | PLATE/SHUTTERCOVER | * | 8 81- | | 1 | | | |
| 28 | V111-703-000-60 | SCREW/M3X6 | * | 4 | | | | | |
| 29 | V401-700-003-00 | WASHER,SP/M3 | * | 4 | | | | | |
| 30 | V411-700-003-00 | WASHER,PL/M3 | * | 8 | | | | | |
| 31 | V401-700-003-00 | WASHER,SP/M3 | * | 2 | | | | | |
| 32 | V301-700-003-00 | NUT,SUS/M3 | * | 2 | | | | | |
| 33 | 2150-761-005-00 | SCREW/TAPPING | * | 16 | | | | | |
| 34 | V301-700-003-00 | NUT,SUS/M3 | * | 4 | | | | | |
| 35 | V111-703-001-20 | SCREW/M3X12 | * | 2 | | | | | |
| 36 | 2232-686-010-10 | HOOK,HOPPER | * | 1 -80 | | | | | |
| 36A | 2232-686-010-20 | HOPPERHOOK | * | 1 81- | | 1 | | | |
| 37 | V411-700-003-00 | WASHER,PL/M3 | * | 4 | | | | | |
| 38 | V111-164-001-20 | SCREW/M4X12 | * | 2 | | | | | |
| 39 | V411-700-004-00 | WASHER,PL/M4 | * | 6 | | | | | |
| 40 | V401-700-004-00 | WASHER,SP/M4 | * | 2 | | | | | |
| 41 | V301-700-004-00 | NUT,SUS/M4 | * | 2 | | | | | |

# FIG.159 COMPONENT PARTS FOR 2233-688-310-00 ON Fig.114

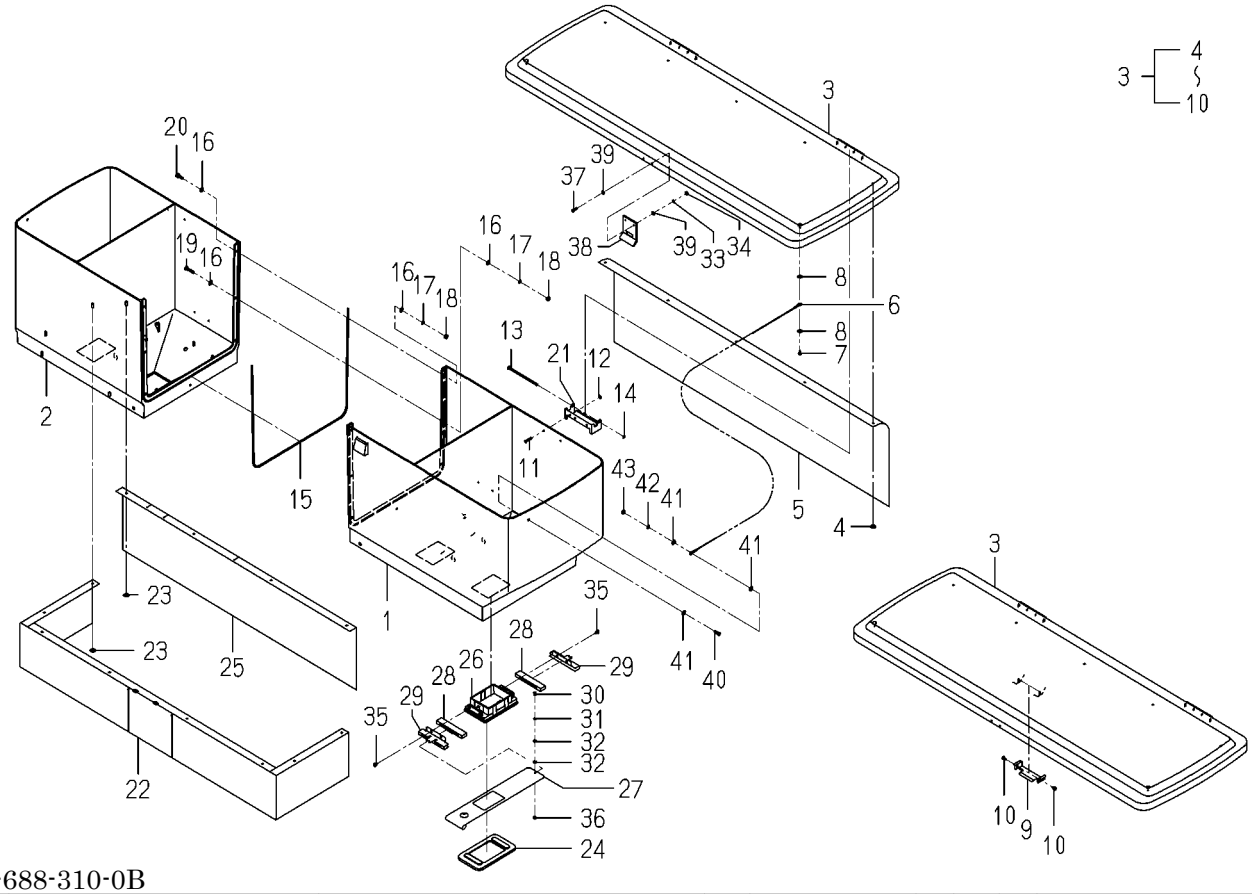


2233-688-310-0B

| KEY | PART CODE | DESCRIPTION | SPC | TYPE OF MODEL NP80D E16 | | ITC | COL | GRP | REMARKS |
|---|---|---|---|---|---|---|---|---|---|
| 1 | 2233-688-005-10 | HOPPER/2/LH/8/OUT | * | 1 81- | | | | | |
| 2 | 2233-688-002-10 | HOPPER/2/RH/8 | * | 1 81- | | | | | |
| 3 | 2233-688-280-10 | COVER/HOPPER/4/LH | * | 1 81- | | | | | |
| 4 | 2151-250-003-00 | NUT,SPEED/4 | * | 5 81- | | | | | |
| 5 | 2233-688-007-00 | SHEET/HOPPER/8 | * | 1 81- | | | | | |
| 6 | 2232-687-007-00 | CABLE/HOPPER/NP/F | * | 2 81- | | | | | |
| 7 | 8841-716-009-00 | PIN/+ | * | 2 81- | | | | | |
| 8 | V411-700-004-00 | WASHER,PL/M4 | * | 4 81- | | | | | |
| 9 | 2232-686-024-00 | HOOK/BRUSH | * | 1 81- | | | | | |
| 10 | 8841-716-009-00 | PIN/+ | * | 2 81- | | | | | |
| 11 | 8836-730-215-00 | RIVET/BLIND/0 | * | 4 81- | | | | | |
| 12 | V411-700-003-00 | WASHER,PL/M3 | * | 4 81- | | | | | |
| 13 | 2232-686-016-00 | PIN/04X86 | * | 2 81- | | | | | |
| 14 | 2145-770-214-00 | RING, SNAP | * | 2 81- | | | | | |
| 15 | 2233-688-009-00 | PACKING/HOPPER/8 | * | 1 81- | | | | | |
| 16 | V411-700-004-00 | WASHER,PL/M4 | * | 14 81- | | | | | |
| 17 | V401-700-004-00 | WASHER,SP/M4 | * | 7 81- | | | | | |
| 18 | V301-700-004-00 | NUT,SUS/M4 | * | 7 81- | | | | | |
| 19 | 8841-716-011-00 | BOLT/M4X20/SUS | * | 4 81- | | | | | |
| 20 | 8836-730-216-00 | BOLT/M4X14/SUS | * | 3 81- | | | | | |
| 21 | 2232-686-004-20 | HING/HOPPER | * | 2 81- | | | | | |
| 22 | 2233-688-016-20 | SHEET/HOPPER/8/LOWER | * | 1 81- | | | | | |
| 23 | 2151-250-003-00 | NUT,SPEED/4 | * | 12 81- | | | | | |
| 24 | 2232-686-012-10 | GASKET/HOPPER | * | 4 81- | | | | | |
| 25 | 2233-688-008-10 | SHEET/HOPPER/8/REAR | * | 1 81- | | | | | |
| 26 | 2232-686-019-20 | HOPPERGUIDE | * | 4 81- | | | | | |
| 27 | 2232-686-020-70 | SHUTTER | * | 4 81- | | | | | |
| 28 | 2232-686-021-30 | PACKING/SHUTTER | * | 8 81- | | | | | |
| 29 | 2232-686-023-20 | PLATE/SHUTTERCOVER | * | 8 81- | | | | | |
| 30 | V111-703-000-60 | SCREW/M3X6 | * | 4 81- | | | | | |

# FIG.159 COMPONENT PARTS FOR 2233-688-310-00 ON Fig.114

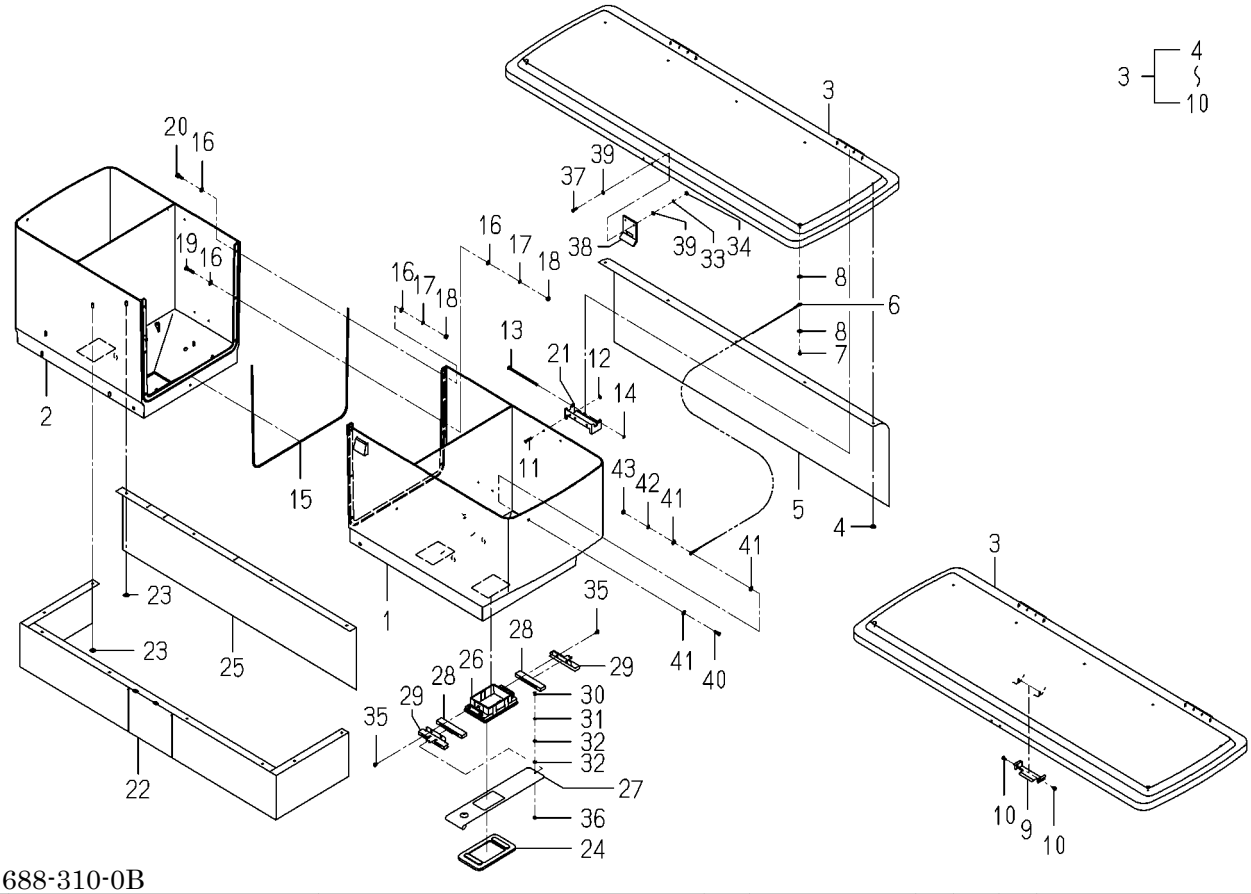


2233-688-310-0B

| KEY | PART CODE | DESCRIPTION | SPC | TYPE OF MODEL NP80D E16 | | ITC | COL | GRP | REMARKS |
|---|---|---|---|---|---|---|---|---|---|
| 31 | V401-700-003-00 | WASHER,SP/M3 | * | 4 81- | | | | | |
| 32 | V411-700-003-00 | WASHER,PL/M3 | * | 8 81- | | | | | |
| 33 | V401-700-003-00 | WASHER,SP/M3 | * | 2 81- | | | | | |
| 34 | V301-700-003-00 | NUT,SUS/M3 | * | 2 81- | | | | | |
| 35 | 2150-761-005-00 | SCREW/TAPPING | * | 16 81- | | | | | |
| 36 | V301-700-003-00 | NUT,SUS/M3 | * | 4 81- | | | | | |
| 37 | V111-703-001-20 | SCREW/M3X12 | * | 2 81- | | | | | |
| 38 | 2232-686-010-20 | HOPPERHOOK | * | 1 81- | | | | | |
| 39 | V411-700-003-00 | WASHER,PL/M3 | * | 4 81- | | | | | |
| 40 | V111-164-001-20 | SCREW/M4X12 | * | 2 81- | | | | | |
| 41 | V411-700-004-00 | WASHER,PL/M4 | * | 6 81- | | | | | |
| 42 | V401-700-004-00 | WASHER,SP/M4 | * | 2 81- | | | | | |
| 43 | V301-700-004-00 | NUT,SUS/M4 | * | 2 81- | | | | | |

# FIG.160 COMPONENT PARTS FOR 2233-688-320-00 ON Fig.114

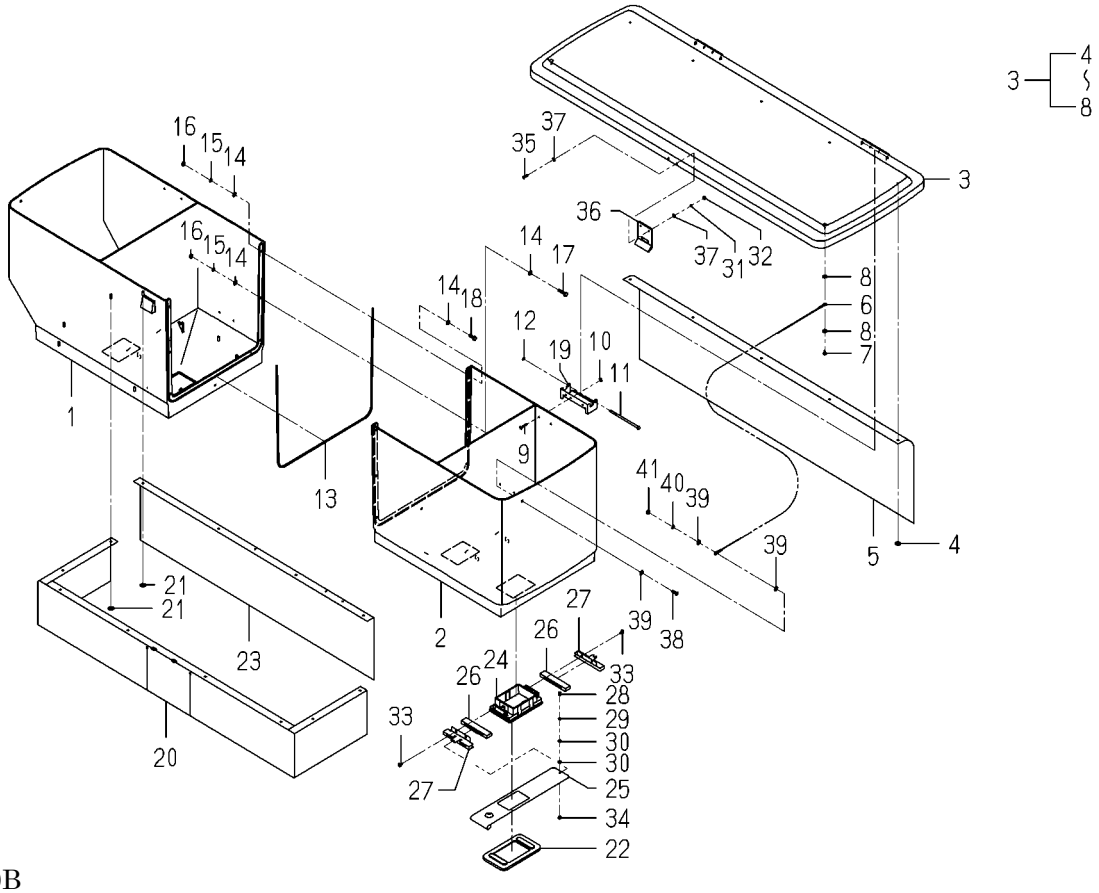


2233-688-320-0B

| KEY | PART CODE | DESCRIPTION | SPC | TYPE OF MODEL NP80D E16 | | ITC | COL | GRP | REMARKS |
|---|---|---|---|---|---|---|---|---|---|
| 1 | 2233-688-006-10 | HOPPER/2/RH/8/OUT | * | 1 81- | | | | | |
| 2 | 2233-688-001-10 | HOPPER/2/LH/8 | * | 1 81- | | | | | |
| 3 | 2233-688-260-30 | COVER/HOPPER/4 ASSY | * | 1 81- | | | | | |
| 4 | 2151-250-003-00 | NUT,SPEED/4 | * | 5 81- | | | | | |
| 5 | 2233-688-007-00 | SHEET/HOPPER/8 | * | 1 81- | | | | | |
| 6 | 2232-687-007-00 | CABLE/HOPPER/NP/F | * | 2 81- | | | | | |
| 7 | 8841-716-009-00 | PIN/+ | * | 2 81- | | | | | |
| 8 | V411-700-004-00 | WASHER,PL/M4 | * | 4 81- | | | | | |
| 9 | 8836-730-215-00 | RIVET/BLIND/0 | * | 4 81- | | | | | |
| 10 | V411-700-003-00 | WASHER,PL/M3 | * | 4 81- | | | | | |
| 11 | 2232-686-016-00 | PIN/04X86 | * | 2 81- | | | | | |
| 12 | 2145-770-214-00 | RING, SNAP | * | 2 81- | | | | | |
| 13 | 2233-688-009-00 | PACKING/HOPPER/8 | * | 1 81- | | | | | |
| 14 | V411-700-004-00 | WASHER,PL/M4 | * | 14 81- | | | | | |
| 15 | V401-700-004-00 | WASHER,SP/M4 | * | 7 81- | | | | | |
| 16 | V301-700-004-00 | NUT,SUS/M4 | * | 7 81- | | | | | |
| 17 | 8841-716-011-00 | BOLT/M4X20/SUS | * | 4 81- | | | | | |
| 18 | 8836-730-216-00 | BOLT/M4X14/SUS | * | 3 81- | | | | | |
| 19 | 2232-686-004-20 | HING/HOPPER | * | 2 81- | | | | | |
| 20 | 2233-688-016-20 | SHEET/HOPPER/8/LOWER | * | 1 81- | | | | | |
| 21 | 2151-250-003-00 | NUT,SPEED/4 | * | 12 81- | | | | | |
| 22 | 2232-686-012-10 | GASKET/HOPPER | * | 4 81- | | | | | |
| 23 | 2233-688-019-00 | SHEET/HOPPER/8RH/REA | * | 1 81- | | | | | |
| 24 | 2232-686-019-20 | HOPPERGUIDE | * | 4 81- | | | | | |
| 25 | 2232-686-020-70 | SHUTTER | * | 4 81- | | | | | |
| 26 | 2232-686-021-30 | PACKING/SHUTTER | * | 8 81- | | | | | |
| 27 | 2232-686-023-20 | PLATE/SHUTTERCOVER | * | 8 81- | | | | | |
| 28 | V111-703-000-60 | SCREW/M3X6 | * | 4 81- | | | | | |
| 29 | V401-700-003-00 | WASHER,SP/M3 | * | 4 81- | | | | | |
| 30 | V411-700-003-00 | WASHER,PL/M3 | * | 8 81- | | | | | |

# FIG.160 COMPONENT PARTS FOR 2233-688-320-00 ON Fig.114

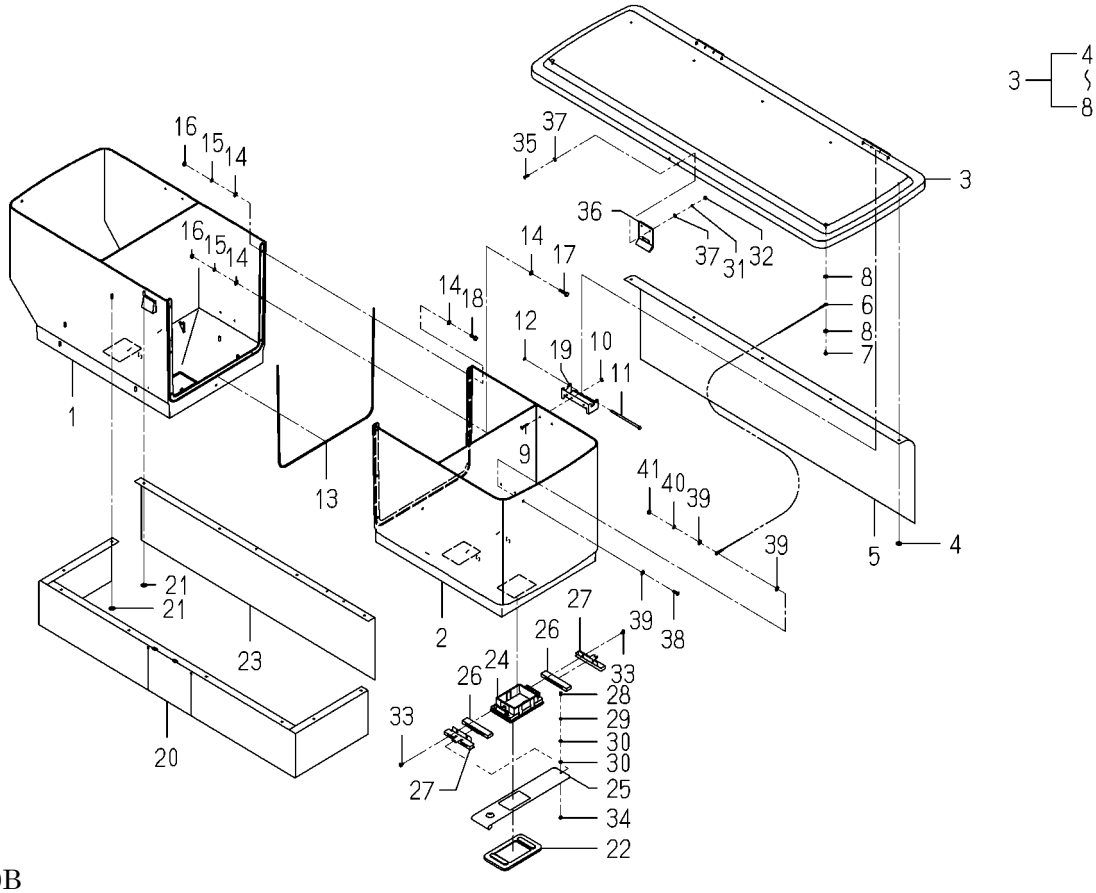


2233-688-320-0B

| KEY | PART CODE | DESCRIPTION | SPC | TYPE OF MODEL NP80D E16 | | ITC | COL | GRP | REMARKS |
|---|---|---|---|---|---|---|---|---|---|
| 31 | V401-700-003-00 | WASHER,SP/M3 | * | 2 81- | | | | | |
| 32 | V301-700-003-00 | NUT,SUS/M3 | * | 2 81- | | | | | |
| 33 | 2150-761-005-00 | SCREW/TAPPING | * | 16 81- | | | | | |
| 34 | V301-700-003-00 | NUT,SUS/M3 | * | 4 81- | | | | | |
| 35 | V111-703-001-20 | SCREW/M3X12 | * | 2 81- | | | | | |
| 36 | 2232-686-010-20 | HOPPERHOOK | * | 1 81- | | | | | |
| 37 | V411-700-003-00 | WASHER,PL/M3 | * | 4 81- | | | | | |
| 38 | V111-164-001-20 | SCREW/M4X12 | * | 2 81- | | | | | |
| 39 | V411-700-004-00 | WASHER,PL/M4 | * | 6 81- | | | | | |
| 40 | V401-700-004-00 | WASHER,SP/M4 | * | 2 81- | | | | | |
| 41 | V301-700-004-00 | NUT,SUS/M4 | * | 2 81- | | | | | |

# Numerical Index




| Part Code | Fig. | Key | Part Code | Fig. | Key | Part Code | Fig. | Key |
|---|---|---|---|---|---|---|---|---|
| 1373-121-001-00 | 24 | 4 | 6209-605-007-10 | 9 | 2 | 6211-312-004-20 | 9 | 33 |
| 1729-202-001-00 | 21 | 14 | 6209-610-001-10 | 5 | 3 | | 26 | 15 |
| 2182-104-520-00 | 24 | 1 | 6209-610-007-00 | 9 | 3 | 6211-341-081-00 | 8 | 1 |
| 2213-101-018-00 | 17 | 24 | 6209-610-008-00 | 5 | 7 | 6211-342-001-30 | 8 | 2 |
| | 18 | 23 | 6209-610-009-00 | 5 | 4 | 6211-361-104-00 | 7 | 1 |
| 2213-101-210-00 | 10 | 3 | 6209-625-001-00 | 5 | 14 | 6211-510-001-00 | 5 | 10 |
| 3625-540-004-00 | 9 | 31 | | 26 | 10 | 6211-510-021-00 | 5 | 10-A |
| 3643-586-001-00 | 22 | 7 | 6209-625-002-00 | 9 | 4 | 6211-511-003-00 | 5 | 11 |
| 3805-355-002-20 | 7 | 2 | | 26 | 12 | 6211-511-004-00 | 5 | 12 |
| 3817-401-001-00 | 9 | 7 | 6209-625-012-00 | 5 | 14-A | 6211-511-023-00 | 5 | 11-A |
| | 11 | 20 | 6209-630-002-10 | 25 | 6 | 6211-511-024-00 | 5 | 12-A |
| | 17 | 7 | | 26 | 21 | 6211-540-001-00 | 6 | 1 |
| | 17 | 12 | 6209-730-005-00 | 12 | 3 | 6211-540-018-00 | 6 | 1-A |
| | 18 | 7 | | 21 | 12 | 6211-560-001-00 | 6 | 3 |
| | 18 | 12 | 6209-730-006-00 | 15 | 4 | 6211-560-007-00 | 6 | 3-A |
| | 21 | 9 | 6209-740-001-00 | 9 | 22 | 6211-599-001-10 | 5 | 13 |
| 6209-000-002-00 | 11 | 18 | 6209-740-005-00 | 5 | 17 | | 6 | 2 |
| 6209-000-004-10 | 5 | 2 | 6209-749-001-20 | 5 | 15 | | 6 | 4 |
| 6209-000-043-00 | 15 | 9 | 6209-788-001-00 | 5 | 29 | 6211-599-012-00 | 5 | 13-A |
| 6209-000-044-00 | 1 | 7 | 6209-920-002-00 | 9 | 16 | | 6 | 2-A |
| 6209-030-043-00 | 21 | 18 | | 16 | 12 | | 6 | 4-A |
| 6209-044-001-00 | 21 | 26 | | 26 | 13 | 6211-751-001-10 | 2 | 2 |
| 6209-046-015-00 | 15 | 7 | 6209-940-004-00 | 11 | 14 | 6211-760-053-10 | 5 | 31 |
| 6209-050-001-00 | 9 | 28 | 6211-110-057-40 | 1 | 1 | 6211-766-009-10 | 5 | 32 |
| 6209-050-002-00 | 9 | 29 | 6211-110-057-50 | 1 | 1-A | 6211-777-007-30 | 10 | 1 |
| 6209-300-014-00 | 1 | 8 | 6211-141-029-20 | 1 | 6 | 6212-111-094-20 | 13 | 1 |
| 6209-360-006-00 | 22 | 6 | | 26 | 3 | 6212-114-094-20 | 14 | 1 |
| 6209-360-018-00 | 22 | 3 | 6211-170-004-20 | 2 | 1 | 6212-116-094-20 | 14 | 3 |
| 6209-360-028-20 | 2 | 6 | 6211-173-003-00 | 2 | 3 | 6212-121-014-20 | 13 | 2 |
| 6209-360-143-00 | 22 | 5 | | 26 | 4 | 6212-124-014-10 | 14 | 2 |
| 6209-409-001-00 | 9 | 14 | 6211-210-037-80 | 5 | 1 | 6212-126-014-10 | 14 | 4 |
| 6209-409-003-00 | 11 | 17 | 6211-210-037-90 | 5 | 1-A | 6212-211-001-10 | 13 | 3 |
| 6209-440-007-00 | 24 | 6 | 6211-210-113-00 | 5 | 1-B | 6212-230-004-10 | 13 | 5 |
| 6209-490-002-10 | 2 | 4 | 6211-210-113-10 | 5 | 1-C | 6212-235-005-00 | 13 | 6 |
| 6209-490-006-00 | 9 | 15-A | 6211-258-001-00 | 5 | 8 | 6212-235-005-10 | 13 | 6-A |
| 6209-500-003-00 | 9 | 12 | | 26 | 8 | 6212-271-016-00 | 13 | 7 |
| | 9 | 21 | 6211-258-002-00 | 5 | 9 | 6212-274-016-00 | 6 | 5 |
| | 26 | 22 | | 26 | 9 | 6212-276-016-00 | 6 | 6 |
| 6209-572-003-00 | 2 | 5 | 6211-291-001-10 | 5 | 25 | 6212-310-009-50 | 15 | 1 |
| | 26 | 5 | 6211-292-001-20 | 5 | 26 | 6212-330-095-20 | 15 | 5 |
| 6209-580-002-10 | 21 | 29 | | 26 | 11 | 6212-333-009-00 | 15 | 6 |
| 6209-587-001-00 | 13 | 4 | 6211-310-069-00 | 9 | 1 | 6212-371-074-10 | 15 | 8 |
| 6209-600-004-00 | 9 | 20 | 6211-311-048-10 | 9 | 32 | 6212-511-002-00 | 12 | 1 |
| 6209-605-004-10 | 1 | 3 | 6211-312-003-20 | 9 | 23 | 6212-521-008-00 | 15 | 3 |
| 6209-605-007-10 | 5 | 5 | | 26 | 14 | 6212-522-010-00 | 12 | 2 |

| Part Code | Fig. | Key | Part Code | Fig. | Key | Part Code | Fig. | Key |
|---|---|---|---|---|---|---|---|---|
| 6212-523-023-00 | 12 | 6 | 6213-614-004-10 | 18 | 9 | 6215-345-004-00 | 27 | 10 |
| 6212-524-002-30 | 21 | 11 | | 26 | 18 | 6215-345-005-00 | 27 | 11 |
| 6212-524-002-40 | 21 | 11-A | 6213-614-018-00 | 17 | 5 | 6215-345-006-00 | 27 | 12 |
| 6212-531-014-00 | 5 | 6 | | 18 | 5-A | 6215-345-007-00 | 27 | 13 |
| 6212-535-002-00 | 21 | 15 | | 26 | 17-A | 6215-345-008-00 | 27 | 14 |
| 6212-535-010-10 | 21 | 15-A | 6213-614-019-00 | 17 | 9 | 6215-345-009-00 | 27 | 15 |
| 6212-535-014-00 | 12 | 4 | | 18 | 9-A | 6215-345-010-00 | 27 | 16 |
| 6212-551-028-00 | 11 | 1 | | 26 | 18-A | 6215-345-011-00 | 27 | 17 |
| 6212-552-014-00 | 11 | 2 | 6213-619-001-00 | 17 | 8 | 6215-345-012-00 | 27 | 18 |
| 6212-561-001-10 | 11 | 3 | | 18 | 8 | 6215-345-013-00 | 27 | 19 |
| 6212-563-005-00 | 11 | 4 | 6213-619-003-00 | 17 | 4 | 6215-345-014-00 | 27 | 20 |
| 6212-565-001-00 | 11 | 5 | | 18 | 4 | 6215-345-015-00 | 27 | 21 |
| 6212-569-002-00 | 1 | 4 | 6213-641-022-20 | 19 | 1 | 6215-345-016-00 | 27 | 22 |
| | 26 | 2 | 6213-669-021-00 | 19 | 3 | 6215-345-017-00 | 27 | 23 |
| 6212-571-006-00 | 11 | 6 | 6213-669-022-00 | 19 | 4 | 6215-345-018-00 | 27 | 24 |
| 6212-575-002-00 | 11 | 7 | | 19 | 4-A | 6215-345-019-00 | 27 | 25 |
| 6212-600-002-30 | 11 | 8 | 6213-671-053-00 | 19 | 5 | 6215-345-020-00 | 27 | 26 |
| 6212-611-004-10 | 11 | 9 | 6213-674-046-00 | 24 | 2 | 6215-345-021-00 | 27 | 27 |
| 6212-616-002-00 | 11 | 16 | 6213-711-018-00 | 17 | 20 | 6215-345-022-00 | 27 | 28 |
| 6212-620-001-20 | 11 | 10 | | 18 | 19 | 6215-345-023-00 | 27 | 29 |
| 6212-626-002-10 | 11 | 11 | 6213-716-001-60 | 17 | 15 | 6215-345-024-00 | 27 | 30 |
| 6212-628-004-00 | 11 | 12 | | 18 | 15 | 6215-345-025-00 | 27 | 31 |
| 6212-628-005-00 | 11 | 13 | 6213-729-013-10 | 17 | 13 | 6215-345-026-00 | 27 | 32 |
| 6213-100-003-30 | 16 | 1 | | 18 | 13 | 6215-345-027-00 | 27 | 33 |
| 6213-111-001-30 | 16 | 2 | 6213-743-002-10 | 17 | 16 | 6215-345-028-00 | 27 | 34 |
| 6213-119-001-00 | 16 | 4 | | 18 | 16 | 6215-345-029-00 | 27 | 35 |
| 6213-129-003-00 | 16 | 3 | | 26 | 19 | 6215-345-030-00 | 27 | 36 |
| 6213-129-006-00 | 5 | 16 | 6214-111-011-20 | 3 | 1 | 6215-345-031-00 | 27 | 37 |
| | 5 | 16-A | 6214-115-001-20 | 3 | 2 | 6215-345-032-00 | 27 | 38 |
| 6213-140-032-10 | 16 | 6 | | 26 | 6 | 6215-345-033-00 | 27 | 39 |
| 6213-149-001-00 | 16 | 8 | 6214-141-008-20 | 4 | 1 | 6215-345-034-00 | 27 | 40 |
| 6213-160-002-20 | 9 | 24 | 6214-145-001-30 | 4 | 2 | 6215-345-035-00 | 27 | 41 |
| 6213-161-001-20 | 9 | 25 | | 26 | 7 | 6215-345-036-00 | 27 | 42 |
| 6213-164-001-00 | 9 | 26 | 6215-300-036-10 | 20 | 1 | 6215-345-037-00 | 27 | 43 |
| 6213-240-002-20 | 16 | 13 | 6215-311-027-00 | 27 | 51 | 6215-345-038-00 | 27 | 44 |
| 6213-311-006-00 | 16 | 10 | 6215-315-002-00 | 20 | 3 | 6215-345-039-00 | 27 | 45 |
| 6213-319-001-00 | 5 | 24 | 6215-330-024-10 | 27 | 1 | 6215-345-040-00 | 27 | 46 |
| 6213-610-005-50 | 17 | 1 | 6215-331-008-00 | 27 | 2 | 6215-345-041-00 | 27 | 47 |
| | 18 | 1 | 6215-332-013-00 | 27 | 5 | 6215-345-042-00 | 27 | 48 |
| 6213-612-004-00 | 17 | 3 | 6215-339-001-00 | 27 | 6 | 6215-345-043-00 | 27 | 49 |
| | 18 | 3 | 6215-342-001-00 | 27 | 3 | 6215-359-001-00 | 20 | 2 |
| 6213-613-002-10 | 17 | 2 | 6215-343-001-00 | 27 | 4 | 6215-359-002-00 | 27 | 50 |
| | 18 | 2 | 6215-345-001-00 | 27 | 7 | 6215-411-125-00 | 22 | 2 |
| 6213-614-003-10 | 18 | 5 | 6215-345-002-00 | 27 | 8 | 6215-411-126-10 | 20 | 4 |
| | 26 | 17 | 6215-345-003-00 | 27 | 9 | 6215-411-127-00 | 20 | 5 |

# Numerical Index



| Part Code | Fig. | Key | Part Code | Fig. | Key | Part Code | Fig. | Key |
|---|---|---|---|---|---|---|---|---|
| 6215-411-128-00 | 20 | 6 | 6215-635-001-00 | 28 | 14 | 6281-129-080-00 | 29 | 8 |
| 6215-412-004-00 | 22 | 1 | 6215-637-001-00 | 28 | 13 | 6281-151-014-00 | 29 | 20 |
| 6215-520-001-00 | 21 | 17 | 6215-639-004-00 | 28 | 15 | 6281-410-026-10 | 25 | 3 |
| 6215-526-004-00 | 21 | 19 | 6215-639-005-00 | 28 | 17 | 6281-910-013-00 | 25 | 5 |
| 6215-531-025-00 | 21 | 24 | 6215-641-006-00 | 28 | 5 | 6281-971-001-10 | 25 | 1 |
| 6215-541-001-10 | 21 | 20 | 6215-643-006-00 | 28 | 1 | 6282-450-008-00 | 25 | 2 |
| 6215-541-012-20 | 21 | 25 | 6215-644-007-00 | 28 | 2 | 6287-810-035-00 | 26 | 1 |
| 6215-541-016-40 | 23 | 2 | 6215-649-002-00 | 28 | 4 | 6287-810-035-10 | 26 | 1-A |
| 6215-541-016-50 | 23 | 2-A | 6215-649-019-00 | 28 | 3 | 6294-453-002-00 | 5 | 21 |
| 6215-542-004-20 | 9 | 17 | 6219-732-017-00 | 25 | 4 | 6513-770-022-10 | 17 | 19 |
| 6215-542-005-20 | 9 | 19 | 6219-752-044-00 | 21 | 5 | 6901-911-020-00 | 8 | 3 |
| 6215-542-006-00 | 21 | 22 | 6219-752-045-00 | 21 | 4 | 6901-911-025-00 | 24 | 8 |
| 6215-543-002-10 | 21 | 21 | 6219-752-046-00 | 21 | 6 | 6902-050-816-00 | 9 | 34 |
| 6215-546-003-30 | 9 | 13 | 6219-752-047-00 | 21 | 7 | 6904-110-818-00 | 5 | 19 |
| 6215-548-082-20 | 23 | 1 | 6281-100-014-00 | 24 | 7 | 6904-110-822-00 | 4 | 4 |
| 6215-549-007-10 | 21 | 30 | 6281-111-009-00 | 29 | 1 | | 5 | 20 |
| 6215-549-012-00 | 21 | 34 | 6281-115-017-00 | 29 | 10 | 6904-110-840-00 | 5 | 18 |
| 6215-549-013-00 | 5 | 28 | 6281-115-018-00 | 29 | 11 | | 17 | 10 |
| 6215-600-156-20 | 21 | 1 | 6281-117-003-00 | 29 | 4 | | 18 | 10 |
| 6215-611-001-00 | 28 | 6 | 6281-118-007-00 | 29 | 3 | 6909-110-408-00 | 29 | 32 |
| 6215-612-001-00 | 28 | 9 | 6281-119-009-00 | 29 | 2 | 6909-150-508-00 | 29 | 31 |
| 6215-619-009-00 | 21 | 3 | 6281-121-010-00 | 29 | 5 | 6909-902-299-00 | 5 | 22 |
| 6215-619-010-00 | 21 | 2 | 6281-124-011-00 | 29 | 6 | 6909-906-105-10 | 16 | 11 |
| 6215-619-022-00 | 28 | 8 | 6281-127-003-00 | 29 | 19 | 6911-129-006-00 | 1 | 2 |
| 6215-621-016-20 | 21 | 10 | 6281-129-029-00 | 29 | 29 | J061-210-015-00 | 17 | 14 |
| 6215-621-016-30 | 21 | 10-A | 6281-129-030-00 | 29 | 28 | | 18 | 14 |
| 6215-622-001-00 | 28 | 12 | 6281-129-043-00 | 29 | 30 | J062-076-082-00 | 22 | 4 |
| 6215-629-001-00 | 28 | 10 | 6281-129-058-00 | 29 | 9 | J062-087-093-00 | 22 | 8 |
| 6215-629-002-00 | 28 | 11 | 6281-129-062-00 | 29 | 33 | P117-303-003-00 | 9 | 18 |
| 6215-629-003-00 | 28 | 18 | 6281-129-064-00 | 29 | 7 | V201-360-802-00 | 21 | 8 |
| 6215-629-004-00 | 28 | 19 | 6281-129-065-00 | 29 | 12 | V210-560-601-20 | 12 | 5 |
| 6215-629-005-00 | 28 | 20 | 6281-129-066-00 | 29 | 13 | | 21 | 16 |
| 6215-629-006-00 | 28 | 21 | 6281-129-067-00 | 29 | 14 | V210-560-602-50 | 16 | 5 |
| 6215-629-007-00 | 28 | 22 | 6281-129-068-00 | 29 | 15 | V211-560-802-00 | 9 | 35 |
| 6215-629-008-00 | 28 | 23 | 6281-129-069-00 | 29 | 16 | V211-560-802-50 | 4 | 3 |
| 6215-629-009-00 | 28 | 24 | 6281-129-070-00 | 29 | 17 | V230-360-601-00 | 7 | 4 |
| 6215-629-010-00 | 28 | 25 | 6281-129-071-00 | 29 | 18 | V230-360-601-20 | 5 | 27 |
| 6215-629-011-00 | 28 | 26 | 6281-129-072-00 | 29 | 21 | V230-360-601-60 | 19 | 2 |
| 6215-629-012-00 | 28 | 27 | 6281-129-073-00 | 29 | 22 | | 25 | 7 |
| 6215-629-013-00 | 28 | 28 | 6281-129-074-00 | 29 | 23 | V231-360-801-60 | 9 | 8 |
| 6215-629-014-00 | 28 | 29 | 6281-129-075-00 | 29 | 24 | | 16 | 9 |
| 6215-629-015-00 | 28 | 30 | 6281-129-076-00 | 29 | 25 | V231-360-802-00 | 3 | 3 |
| 6215-629-016-00 | 28 | 31 | 6281-129-077-00 | 29 | 26 | | 10 | 4 |
| 6215-631-035-00 | 28 | 7 | 6281-129-078-00 | 29 | 27 | | 17 | 11 |
| 6215-634-001-00 | 28 | 16 | 6281-129-079-00 | 29 | 34 | | 17 | 17 |

| Part Code | Fig. | Key | Part Code | Fig. | Key | Part Code | Fig. | Key |
|---|---|---|---|---|---|---|---|---|
| V231-360-802-00 | 18 | 11 | | | | | | |
| | 18 | 17 | | | | | | |
| | 24 | 3 | | | | | | |
| V231-360-802-50 | 9 | 36 | | | | | | |
| | 17 | 22 | | | | | | |
| | 18 | 21 | | | | | | |
| V231-360-803-00 | 9 | 11 | | | | | | |
| V231-360-804-00 | 3 | 4 | | | | | | |
| | 17 | 23 | | | | | | |
| | 18 | 22 | | | | | | |
| V231-360-804-50 | 9 | 9 | | | | | | |
| | 17 | 6 | | | | | | |
| | 18 | 6 | | | | | | |
| V231-360-805-00 | 11 | 19 | | | | | | |
| V231-360-805-50 | 9 | 6 | | | | | | |
| V231-360-807-50 | 9 | 10 | | | | | | |
| | 17 | 18 | | | | | | |
| | 18 | 18 | | | | | | |
| V231-360-808-50 | 9 | 5 | | | | | | |
| V233-361-002-00 | 10 | 2 | | | | | | |
| V233-361-007-00 | 24 | 5 | | | | | | |
| V301-260-006-00 | 5 | 30 | | | | | | |
| | 9 | 30 | | | | | | |
| | 21 | 31 | | | | | | |
| V302-260-006-00 | 21 | 27 | | | | | | |
| V305-260-008-00 | 9 | 14-A | | | | | | |
| V341-120-008-00 | 9 | 15 | | | | | | |
| V401-160-006-00 | 21 | 33 | | | | | | |
| V411-260-006-00 | 21 | 32 | | | | | | |
| V523-101-001-80 | 15 | 2 | | | | | | |
| V600-110-620-30 | 21 | 13 | | | | | | |
| V682-200-000-60 | 1 | 5 | | | | | | |
| V704-140-016-00 | 11 | 15 | | | | | | |
| V705-140-012-00 | 9 | 27 | | | | | | |
| V710-140-004-00 | 21 | 23 | | | | | | |
| V720-101-900-80 | 21 | 28 | | | | | | |
| V720-102-401-50 | 16 | 7 | | | | | | |
| | 26 | 16 | | | | | | |
| V720-102-401-80 | 7 | 3 | | | | | | |
| V723-102-005-50 | 17 | 21 | | | | | | |
| | 18 | 20 | | | | | | |
| | 26 | 20 | | | | | | |
| V782-160-000-4T | 5 | 23 | | | | | | |

# Numerical Index




| Part Code | Fig. | Key |
|---|---|---|
| 1110-401-002-00 | 7 | 9 |
| | 9 | 19 |
| 1118-606-002-10 | 90 | 51 |
| 1308-230-002-00 | 100 | 46 |
| 1329-106-002-00 | 58 | 14 |
| | 59 | 14 |
| 1337-708-007-00 | 23 | 5 |
| 1342-402-006-00 | 2 | 44 |
| | 37 | 19 |
| | 38 | 20 |
| | 44 | 14 |
| | 47 | 32 |
| | 82 | 35 |
| | 83 | 35 |
| 1376-402-003-00 | 2 | 42 |
| | 2 | 42-A |
| | 23 | 18 |
| | 47 | 34 |
| | 84 | 4 |
| | 90 | 53 |
| | 109 | 3 |
| | 110 | 10 |
| | 113 | 92 |
| | 118 | 4 |
| 1416-509-007-00 | 130 | 45 |
| 1421-201-002-00 | 153 | 35 |
| 1421-621-038-00 | 2 | 7 |
| | 2 | 43 |
| | 47 | 33 |
| | 90 | 55 |
| | 146 | 8 |
| 1425-621-004-00 | 15 | 19 |
| | 37 | 5 |
| | 38 | 5 |
| | 100 | 6 |
| 1426-406-203-00 | 37 | 2 |
| | 38 | 2 |
| 1426-621-038-00 | 78 | 5 |
| | 126 | 47 |
| 1444-621-242-00 | 127 | 2 |
| 1488-611-003-10 | 73 | 6 |
| 1491-623-222-00 | 79 | 36 |
| | 80 | 35 |
| | 81 | 36 |
| 1491-623-223-00 | 79 | 37 |
| 1491-623-223-00 | 80 | 36 |
| | 81 | 37 |
| 1541-621-210-00 | 66 | 3 |
| 1544-104-205-00 | 2 | 22 |
| 1560-132-007-30 | 7 | 21 |
| | 9 | 15 |
| | 99 | 22 |
| | 108 | 64 |
| | 147 | 19 |
| 1560-214-003-00 | 33 | 52 |
| | 34 | 48 |
| | 35 | 52 |
| | 36 | 48 |
| 1560-695-021-00 | 7 | 18 |
| | 9 | 12 |
| | 25 | 1 |
| | 99 | 19 |
| | 108 | 65 |
| | 147 | 16 |
| 1560-695-022-00 | 7 | 20 |
| | 9 | 14 |
| | 99 | 20 |
| | 108 | 63 |
| | 147 | 17 |
| 1564-263-002-00 | 33 | 51 |
| | 34 | 47 |
| | 35 | 51 |
| | 36 | 47 |
| 1566-705-006-00 | 74 | 12 |
| | 75 | 12 |
| 1575-123-002-00 | 65 | 16 |
| 1575-616-005-00 | 112 | 16 |
| 1594-221-001-00 | 33 | 9 |
| | 34 | 9 |
| | 35 | 9 |
| | 36 | 9 |
| 1600-619-210-10 | 66 | 2 |
| 1600-619-211-00 | 66 | 4 |
| 1600-619-212-00 | 66 | 5 |
| 1600-619-213-00 | 66 | 6 |
| 1600-619-214-00 | 66 | 7 |
| 1614-690-202-00 | 82 | 15 |
| | 83 | 15 |
| 1614-695-003-00 | 79 | 50 |
| 1650-104-201-00 | 2 | 23 |
| 1650-509-280-00 | 54 | 7 |
| 1650-650-222-00 | 82 | 8 |
| | 83 | 8 |
| 1650-652-390-00 | 79 | 48 |
| | 80 | 47 |
| | 81 | 48 |
| 1650-658-270-00 | 82 | 23 |
| | 83 | 23 |
| | 90 | 34 |
| 1675-104-211-00 | 2 | 20 |
| 1675-104-213-00 | 2 | 21 |
| 1675-503-001-00 | 53 | 4 |
| 1675-695-005-00 | 79 | 17 |
| | 80 | 16 |
| | 81 | 17 |
| | 90 | 43 |
| 1675-695-332-00 | 79 | 53 |
| 1690-505-240-00 | 100 | 53 |
| 1690-652-210-00 | 82 | 22 |
| | 83 | 22 |
| 1705-408-230-00 | 54 | 9 |
| 1705-408-320-00 | 146 | 5 |
| 1716-506-001-00 | 47 | 28 |
| 1716-510-004-00 | 47 | 13 |
| 1716-601-003-00 | 88 | 7 |
| | 130 | 14 |
| 1716-601-003-10 | 88 | 7-A |
| | 130 | 14-A |
| 1716-680-200-20 | 79 | 23 |
| | 80 | 22 |
| | 81 | 23 |
| 1716-901-016-00 | 137 | 6 |
| | 138 | 6 |
| 1719-630-051-00 | 64 | 13 |
| | 64 | 45 |
| | 67 | 13 |
| | 67 | 45 |
| | 68 | 12 |
| | 68 | 44 |
| 1719-650-250-00 | 82 | 10 |
| | 83 | 10 |
| 1719-730-002-00 | 2 | 10 |
| 1725-210-002-00 | 8 | 21 |
| 1725-508-001-00 | 47 | 5 |
| 1728-104-210-00 | 2 | 19 |

| Part Code | Fig. | Key | Part Code | Fig. | Key | Part Code | Fig. | Key |
|---|---|---|---|---|---|---|---|---|
| 1729-111-006-10 | 5 | 9 | 2132-210-005-00 | 19 | 6 | 2144-501-011-10 | 65 | 10 |
| 1729-111-280-20 | 5 | 6 | | 19 | 12 | | 67 | 25 |
| 1729-111-283-00 | 5 | 7 | | 19 | 18 | | 67 | 31 |
| 1729-111-284-00 | 5 | 8 | 2132-544-200-10 | 127 | 1 | | 67 | 57 |
| 1729-609-240-00 | 79 | 16 | 2132-545-008-00 | 55 | 9 | | 67 | 79 |
| | 80 | 15 | | 56 | 11 | | 68 | 24 |
| | 81 | 16 | | 95 | 7 | | 68 | 30 |
| | 90 | 42 | | 109 | 16 | | 68 | 56 |
| 1729-662-330-00 | 9 | 5 | | 118 | 8 | | 68 | 78 |
| | 52 | 9 | | 126 | 48 | | 79 | 27 |
| | 95 | 11 | 2132-801-220-10 | 126 | 25 | | 80 | 26 |
| 1729-662-340-00 | 6 | 19 | 2137-107-002-10 | 116 | 43 | | 81 | 27 |
| | 51 | 8 | 2137-330-004-00 | 99 | 8 | 2144-542-220-00 | 79 | 35 |
| | 99 | 13 | | 147 | 9 | | 80 | 34 |
| | 106 | 7 | 2139-807-005-00 | 129 | 30 | | 81 | 35 |
| | 122 | 23 | 2140-420-012-10 | 91 | 30 | 2144-701-021-10 | 14 | 13 |
| 1732-662-200-00 | 82 | 29 | 2140-816-001-00 | 89 | 13 | | 15 | 27 |
| | 83 | 29 | 2142-307-002-00 | 22 | 5 | | 18 | 32 |
| 1734-407-210-20 | 47 | 19-A | 2142-407-002-10 | 4 | 12 | 2144-738-216-00 | 124 | 15 |
| 1740-680-530-20 | 79 | 42 | 2142-736-203-10 | 124 | 26 | | 125 | 15 |
| | 80 | 41 | | 125 | 26 | 2144-805-056-00 | 65 | 15 |
| | 81 | 42 | 2142-736-214-00 | 124 | 8 | 2145-420-001-20 | 31 | 3 |
| 1754-640-230-10 | 82 | 25 | | 125 | 8 | 2145-542-230-00 | 109 | 18 |
| | 83 | 25 | 2142-736-221-00 | 124 | 17 | 2145-542-232-10 | 109 | 19 |
| 1756-905-071-00 | 134 | 4 | | 125 | 17 | 2145-586-200-13 | 65 | 11 |
| | 135 | 4 | 2142-736-224-00 | 124 | 7 | 2145-586-210-13 | 65 | 12 |
| 1757-509-012-00 | 53 | 10 | | 125 | 7 | 2145-586-220-03 | 65 | 17 |
| 2110-325-003-00 | 100 | 42 | 2142-736-235-00 | 154 | 3 | 2145-751-003-00 | 116 | 55 |
| 2111-441-019-20 | 33 | 63 | | 155 | 3 | 2145-751-004-00 | 70 | 10 |
| | 35 | 65 | 2142-736-236-00 | 100 | 5 | | 71 | 10 |
| 2130-407-003-00 | 74 | 6 | | 101 | 13 | | 111 | 34 |
| | 75 | 6 | | 116 | 29 | 2145-770-014-00 | 108 | 60 |
| 2130-601-018-00 | 65 | 18 | 2142-736-239-00 | 154 | 15 | | 113 | 21 |
| | 130 | 28 | | 155 | 15 | | 113 | 57 |
| | 133 | 5 | 2142-736-271-00 | 124 | 12 | 2145-770-214-00 | 20 | 6 |
| 2130-610-012-00 | 100 | 31 | | 125 | 12 | | 157 | 14 |
| 2130-713-003-00 | 66 | 11 | 2144-117-002-00 | 77 | 3 | | 158 | 12 |
| 2130-725-006-00 | 95 | 14 | | 106 | 6 | | 159 | 14 |
| | 95 | 34 | 2144-301-005-10 | 37 | 3 | | 160 | 12 |
| 2130-802-011-10 | 119 | 14 | | 38 | 3 | 2145-770-215-00 | 20 | 5 |
| 2130-802-208-00 | 126 | 6 | 2144-501-011-10 | 64 | 25 | 2145-774-003-00 | 102 | 2 |
| 2132-161-005-00 | 92 | 22 | | 64 | 31 | | 108 | 8 |
| | 124 | 27 | | 64 | 57 | | 108 | 10 |
| | 125 | 27 | | 64 | 63 | 2146-640-001-60 | 105 | 1 |
| | 149 | 6 | | 65 | 4 | 2150-761-005-00 | 157 | 35 |

# Numerical Index




| Part Code | Fig. | Key |
|---|---|---|
| 2150-761-005-00 | 158 | 33 |
| | 159 | 35 |
| | 160 | 33 |
| 2151-250-003-00 | 157 | 4 |
| | 157 | 23 |
| | 158 | 4 |
| | 158 | 21 |
| | 159 | 4 |
| | 159 | 23 |
| | 160 | 4 |
| | 160 | 21 |
| 2151-602-006-00 | 37 | 8 |
| | 38 | 8 |
| 2151-810-004-10 | 79 | 38 |
| | 80 | 37 |
| | 81 | 38 |
| | 90 | 24 |
| 2157-201-004-10 | 33 | 6 |
| | 34 | 6 |
| | 35 | 6 |
| | 36 | 6 |
| 2157-508-230-00 | 129 | 19 |
| 2157-510-071-10 | 74 | 11 |
| | 75 | 11 |
| 2157-510-710-11 | 74 | 10 |
| | 75 | 10 |
| 2161-201-001-00 | 11 | 8 |
| 2161-214-003-00 | 21 | 3 |
| | 32 | 7 |
| 2161-320-001-00 | 2 | 40 |
| | 56 | 9 |
| 2161-321-001-00 | 30 | 3 |
| 2161-330-004-00 | 33 | 30 |
| | 33 | 41 |
| | 34 | 31 |
| | 35 | 30 |
| | 35 | 41 |
| | 36 | 31 |
| 2161-435-002-00 | 47 | 29 |
| 2161-506-005-00 | 79 | 30 |
| | 80 | 29 |
| | 81 | 30 |
| 2161-513-051-10 | 64 | 30 |
| | 64 | 62 |
| | 65 | 3 |

| Part Code | Fig. | Key |
|---|---|---|
| 2161-513-051-10 | 65 | 9 |
| | 67 | 30 |
| | 68 | 29 |
| 2161-513-810-20 | 66 | 8 |
| 2161-513-820-10 | 66 | 9 |
| 2161-513-850-30 | 66 | 1 |
| 2161-528-001-00 | 77 | 6 |
| 2161-532-202-00 | 78 | 2 |
| 2161-532-203-00 | 78 | 3 |
| 2161-612-002-10 | 102 | 4 |
| 2161-615-014-00 | 9 | 39 |
| | 10 | 6 |
| 2161-618-003-00 | 89 | 12 |
| 2161-701-005-10 | 116 | 26 |
| 2161-701-006-10 | 116 | 27 |
| 2161-735-005-00 | 31 | 5 |
| | 31 | 8 |
| | 33 | 64 |
| | 35 | 66 |
| | 65 | 18-A |
| | 82 | 19 |
| | 83 | 19 |
| | 91 | 32 |
| | 111 | 26 |
| | 111 | 31 |
| | 113 | 94 |
| | 121 | 24 |
| | 131 | 83 |
| 2161-735-006-00 | 7 | 30 |
| | 9 | 35 |
| | 10 | 3 |
| | 21 | 5 |
| | 25 | 6 |
| | 39 | 22 |
| | 40 | 23 |
| | 40 | 28 |
| | 52 | 14 |
| | 99 | 9 |
| | 99 | 11 |
| | 107 | 7 |
| | 111 | 24 |
| | 147 | 10 |
| | 147 | 12 |
| 2161-738-008-00 | 124 | 19 |
| | 125 | 19 |

| Part Code | Fig. | Key |
|---|---|---|
| 2161-738-222-00 | 154 | 6 |
| | 155 | 6 |
| 2161-738-611-00 | 124 | 16 |
| 2161-739-611-00 | 125 | 16 |
| 2161-831-003-10 | 126 | 23 |
| 2161-831-007-00 | 126 | 38 |
| 2161-831-209-00 | 126 | 12 |
| 2161-831-211-00 | 126 | 10 |
| | 126 | 18 |
| | 126 | 34 |
| 2161-831-231-30 | 126 | 2 |
| 2161-834-001-40 | 130 | 23 |
| | 130 | 31 |
| 2161-834-001-50 | 130 | 23-A |
| | 130 | 31-A |
| 2161-834-004-00 | 126 | 7 |
| 2161-834-005-20 | 130 | 39 |
| 2161-834-007-00 | 130 | 21 |
| 2161-835-019-00 | 131 | 33 |
| 2161-835-021-00 | 131 | 35 |
| 2161-835-022-00 | 131 | 36 |
| 2162-330-007-00 | 33 | 56 |
| | 34 | 52 |
| | 35 | 56 |
| | 36 | 52 |
| 2162-539-230-10 | 84 | 2 |
| 2162-804-005-00 | 130 | 44 |
| 2162-831-003-00 | 126 | 52 |
| 2162-831-032-00 | 126 | 66 |
| 2162-831-033-00 | 126 | 51 |
| 2162-831-250-00 | 126 | 60 |
| 2162-831-350-00 | 126 | 59 |
| 2162-831-360-00 | 126 | 65 |
| 2162-831-370-00 | 126 | 62 |
| 2162-831-401-30 | 126 | 3 |
| 2162-833-001-00 | 129 | 5 |
| 2162-833-051-00 | 129 | 21 |
| 2163-526-006-00 | 64 | 29 |
| | 64 | 61 |
| | 65 | 7 |
| | 67 | 29 |
| | 67 | 61 |
| | 68 | 28 |
| | 68 | 60 |
| 2163-802-007-00 | 91 | 19 |

| Part Code | Fig. | Key | Part Code | Fig. | Key | Part Code | Fig. | Key |
|---|---|---|---|---|---|---|---|---|
| 2163-870-003-10 | 64 | 26 | 2186-436-007-00 | 89 | 11 | 2186-805-003-00 | 113 | 84 |
| | 64 | 58 | | 106 | 2 | | 131 | 21 |
| | 67 | 26 | 2186-436-008-00 | 106 | 5 | 2186-805-004-20 | 131 | 25 |
| | 67 | 58 | 2186-508-009-00 | 58 | 6 | 2186-805-005-00 | 131 | 23 |
| | 68 | 25 | | 58 | 18 | | 131 | 74 |
| | 68 | 57 | | 59 | 6 | 2186-805-008-00 | 131 | 44 |
| 2163-870-035-20 | 64 | 27 | | 59 | 18 | | 131 | 75 |
| | 64 | 59 | | 62 | 4 | 2186-805-011-00 | 118 | 11 |
| | 67 | 27 | | 64 | 9 | | 131 | 46 |
| | 67 | 59 | | 64 | 41 | 2186-805-026-00 | 126 | 71 |
| | 68 | 26 | | 67 | 9 | 2186-805-052-00 | 131 | 68 |
| | 68 | 58 | | 67 | 41 | 2186-834-210-10 | 130 | 3 |
| 2171-505-005-00 | 89 | 7 | | 68 | 8 | 2186-916-001-20 | 134 | 1 |
| 2172-124-004-00 | 77 | 2 | | 68 | 40 | | 135 | 1 |
| | 113 | 103 | 2186-508-017-00 | 33 | 69 | 2186-916-002-20 | 134 | 2 |
| 2172-312-002-00 | 26 | 41 | | 35 | 72 | | 135 | 2 |
| 2172-831-005-00 | 126 | 11 | 2186-513-440-00 | 65 | 6 | 2186-916-007-10 | 134 | 5 |
| | 126 | 20 | 2186-528-004-00 | 129 | 9 | | 135 | 5 |
| 2175-325-007-00 | 70 | 11 | 2186-528-007-00 | 77 | 7 | 2186-916-009-20 | 134 | 6 |
| | 71 | 11 | 2186-528-244-00 | 77 | 9 | | 135 | 6 |
| 2175-528-008-20 | 77 | 8 | 2186-533-002-00 | 50 | 8 | 2186-916-010-30 | 134 | 7 |
| 2178-421-003-00 | 7 | 10 | 2186-536-211-00 | 79 | 24 | | 135 | 7 |
| | 9 | 20 | | 80 | 23 | 2186-916-019-10 | 137 | 18 |
| 2178-503-246-00 | 26 | 32 | | 81 | 24 | | 138 | 18 |
| 2178-631-013-00 | 8 | 10 | 2186-536-212-00 | 79 | 25 | 2186-916-035-10 | 137 | 17 |
| 2180-203-002-00 | 18 | 28 | | 80 | 24 | | 138 | 17 |
| 2182-803-008-00 | 114 | 6 | | 81 | 25 | 2186-916-042-00 | 134 | 10 |
| 2183-526-001-10 | 122 | 4 | 2186-537-110-00 | 40 | 17 | | 135 | 10 |
| 2183-526-008-00 | 20 | 15 | 2186-545-003-10 | 82 | 30 | 2186-916-043-00 | 134 | 11 |
| 2183-613-003-00 | 103 | 6 | | 83 | 30 | | 135 | 11 |
| | 120 | 5 | 2186-703-220-02 | 116 | 34 | 2186-916-044-00 | 134 | 12 |
| 2183-880-018-00 | 108 | 43 | 2186-707-001-00 | 122 | 7 | | 135 | 12 |
| 2186-124-052-00 | 20 | 21 | 2186-707-006-00 | 122 | 6 | 2186-916-045-00 | 134 | 13 |
| 2186-312-002-00 | 26 | 44 | 2186-738-038-20 | 45 | 7 | | 135 | 13 |
| 2186-320-001-00 | 74 | 9 | | 124 | 18 | 2186-916-046-00 | 134 | 14 |
| | 75 | 9 | | 125 | 18 | | 135 | 14 |
| 2186-336-003-00 | 52 | 13 | | 126 | 24 | 2188-105-004-00 | 4 | 11 |
| 2186-401-001-10 | 45 | 3 | 2186-738-059-00 | 154 | 22 | 2188-201-007-00 | 11 | 11 |
| 2186-409-033-00 | 47 | 25 | | 155 | 22 | 2188-208-015-00 | 94 | 17 |
| 2186-409-036-00 | 47 | 11 | 2186-740-033-20 | 154 | 18 | | 108 | 32 |
| 2186-414-002-00 | 9 | 33 | | 155 | 18 | | 108 | 37 |
| | 37 | 20 | 2186-801-001-00 | 126 | 33 | | 108 | 47 |
| | 38 | 21 | 2186-801-702-00 | 126 | 9 | | 111 | 39 |
| | 90 | 52 | 2186-802-051-00 | 127 | 5 | 2188-301-006-00 | 37 | 12 |
| 2186-421-033-00 | 110 | 8 | 2186-804-300-00 | 130 | 1 | 2188-542-003-00 | 40 | 16 |

# Numerical Index




| Part Code | Fig. | Key |
|---|---|---|
| 2188-542-202-00 | 40 | 10 |
| 2188-804-004-00 | 130 | 6 |
| 2190-436-001-00 | 106 | 4 |
| 2190-536-200-00 | 79 | 49 |
| 2190-804-002-00 | 130 | 26 |
| 2190-805-012-00 | 123 | 4 |
| | 131 | 73 |
| 2190-805-017-00 | 131 | 71 |
| 2190-805-023-00 | 131 | 72 |
| 2190-805-024-00 | 131 | 26 |
| 2190-805-330-00 | 131 | 69 |
| 2190-916-007-00 | 137 | 15 |
| | 138 | 15 |
| 2190-916-008-00 | 137 | 16 |
| | 138 | 16 |
| 2194-117-001-00 | 111 | 34-A |
| 2194-210-001-00 | 19 | 4 |
| | 19 | 10 |
| 2194-301-009-00 | 54 | 3 |
| 2194-321-001-00 | 30 | 4 |
| 2194-338-003-20 | 97 | 4 |
| 2194-410-006-00 | 11 | 9 |
| 2194-419-009-00 | 33 | 36 |
| | 35 | 36 |
| 2194-419-020-00 | 34 | 36 |
| | 36 | 36 |
| 2194-508-008-00 | 63 | 9 |
| 2194-508-016-00 | 112 | 12 |
| 2194-508-220-10 | 63 | 8 |
| 2194-543-001-00 | 95 | 6 |
| 2194-543-200-00 | 64 | 20 |
| | 64 | 52 |
| | 67 | 20 |
| | 67 | 52 |
| | 68 | 19 |
| | 68 | 51 |
| | 95 | 4 |
| 2194-701-010-00 | 18 | 11 |
| | 34 | 37 |
| | 36 | 37 |
| | 116 | 17 |
| | 148 | 6 |
| 2194-701-020-00 | 116 | 20 |
| 2194-805-032-00 | 131 | 30 |
| 2194-901-016-00 | 128 | 2 |

| Part Code | Fig. | Key |
|---|---|---|
| 2197-803-003-00 | 67 | 69 |
| | 68 | 68 |
| 2201-201-002-00 | 100 | 34 |
| 2201-422-003-00 | 92 | 18 |
| 2204-105-013-00 | 3 | 8 |
| 2204-111-006-10 | 5 | 5 |
| 2204-111-025-00 | 5 | 20 |
| 2204-124-006-00 | 6 | 24 |
| 2204-124-631-00 | 6 | 2 |
| 2204-207-012-30 | 15 | 13 |
| 2204-208-002-10 | 16 | 7 |
| 2204-208-007-20 | 16 | 6 |
| 2204-208-018-00 | 16 | 14 |
| 2204-222-001-00 | 22 | 3 |
| 2204-302-200-10 | 23 | 6 |
| 2204-323-011-00 | 29 | 2 |
| | 33 | 59 |
| | 34 | 55 |
| | 35 | 60 |
| | 36 | 56 |
| | 54 | 4 |
| 2204-331-008-00 | 37 | 9 |
| | 38 | 9 |
| 2204-336-005-00 | 39 | 21 |
| 2204-336-009-00 | 67 | 64 |
| | 68 | 63 |
| 2204-343-001-00 | 42 | 3 |
| | 43 | 3 |
| 2204-401-200-00 | 45 | 1 |
| 2204-409-051-00 | 146 | 4 |
| 2204-409-073-00 | 90 | 26 |
| 2204-411-001-00 | 48 | 2 |
| 2204-440-001-30 | 54 | 5 |
| 2204-440-300-10 | 54 | 1 |
| 2204-440-310-00 | 54 | 2 |
| 2204-501-005-00 | 58 | 2 |
| | 59 | 2 |
| 2204-508-003-10 | 60 | 9 |
| | 61 | 9 |
| 2204-508-052-00 | 58 | 13 |
| | 59 | 13 |
| | 62 | 2 |
| 2204-512-003-10 | 63 | 5 |
| 2204-513-003-00 | 67 | 77 |
| | 68 | 76 |

| Part Code | Fig. | Key |
|---|---|---|
| 2204-513-021-00 | 64 | 24 |
| | 64 | 56 |
| | 67 | 24 |
| | 67 | 56 |
| | 68 | 23 |
| | 68 | 55 |
| 2204-513-025-01 | 64 | 17 |
| | 67 | 17 |
| | 68 | 16 |
| 2204-513-026-00 | 64 | 8 |
| | 64 | 32 |
| | 64 | 40 |
| | 64 | 64 |
| | 67 | 8 |
| | 67 | 32 |
| | 67 | 40 |
| | 68 | 7 |
| | 68 | 31 |
| | 68 | 39 |
| 2204-513-027-01 | 64 | 19 |
| | 67 | 19 |
| | 68 | 18 |
| 2204-513-028-00 | 64 | 23 |
| | 64 | 55 |
| | 67 | 23 |
| | 67 | 55 |
| | 68 | 22 |
| | 68 | 54 |
| 2204-513-420-01 | 64 | 36 |
| | 67 | 36 |
| | 68 | 35 |
| 2204-513-430-01 | 64 | 37 |
| | 67 | 37 |
| | 68 | 36 |
| 2204-513-440-01 | 64 | 38 |
| | 67 | 38 |
| | 68 | 37 |
| 2204-513-460-01 | 64 | 42 |
| | 67 | 42 |
| | 68 | 41 |
| 2204-513-470-01 | 64 | 50 |
| | 67 | 50 |
| | 68 | 49 |
| 2204-513-630-10 | 64 | 28 |
| | 67 | 28 |

| Part Code | Fig. | Key | Part Code | Fig. | Key | Part Code | Fig. | Key |
|---|---|---|---|---|---|---|---|---|
| 2204-513-630-10 | 68 | 27 | 2204-537-501-00 | 82 | 2 | 2204-738-001-10 | 154 | 17 |
| 2204-513-720-21 | 64 | 4 | | 83 | 2 | | 155 | 17 |
| | 67 | 4 | 2204-542-200-00 | 79 | 45 | 2204-738-004-00 | 154 | 8 |
| | 68 | 3 | | 80 | 44 | | 155 | 8 |
| 2204-513-730-21 | 64 | 5 | | 81 | 45 | 2204-738-005-00 | 154 | 25 |
| | 67 | 5 | 2204-556-003-00 | 20 | 4 | | 155 | 25 |
| | 68 | 4 | 2204-581-049-00 | 92 | 8 | 2204-738-059-00 | 110 | 3 |
| 2204-513-740-21 | 64 | 6 | | 93 | 8 | | 112 | 44 |
| | 67 | 6 | 2204-582-015-00 | 94 | 11 | | 154 | 19 |
| | 68 | 5 | | 94 | 20 | | 155 | 19 |
| 2204-513-760-11 | 64 | 10 | | 107 | 5 | 2204-738-080-10 | 144 | 1 |
| | 67 | 10 | 2204-582-051-00 | 94 | 21 | 2204-738-240-20 | 154 | 7 |
| | 68 | 9 | 2204-582-059-00 | 94 | 5 | | 155 | 7 |
| 2204-513-780-11 | 64 | 11 | | 94 | 14 | 2204-738-273-00 | 124 | 5 |
| | 64 | 43 | 2204-582-062-00 | 94 | 4 | 2204-738-274-00 | 124 | 9 |
| | 67 | 11 | | 94 | 19 | | 125 | 9 |
| | 67 | 43 | 2204-582-063-00 | 94 | 3 | 2204-738-275-20 | 124 | 10 |
| | 68 | 10 | | 94 | 18 | 2204-738-277-00 | 124 | 11 |
| | 68 | 42 | 2204-589-051-00 | 96 | 2 | 2204-738-282-20 | 124 | 3 |
| 2204-513-790-11 | 64 | 12 | 2204-589-052-00 | 96 | 26 | 2204-738-283-00 | 124 | 5-A |
| | 64 | 44 | 2204-589-053-00 | 96 | 3 | 2204-738-284-00 | 124 | 9-A |
| | 67 | 12 | 2204-589-057-10 | 96 | 6 | | 125 | 9-A |
| | 67 | 44 | | 96 | 28 | 2204-738-304-20 | 154 | 4 |
| | 68 | 11 | 2204-589-058-10 | 96 | 9 | | 155 | 4 |
| | 68 | 43 | | 96 | 31 | 2204-738-307-00 | 154 | 28 |
| 2204-514-003-00 | 70 | 13 | 2204-589-059-10 | 96 | 36 | 2204-738-312-00 | 154 | 20 |
| | 71 | 13 | 2204-589-061-10 | 96 | 14 | | 155 | 20 |
| 2204-514-210-00 | 70 | 9 | 2204-589-062-00 | 96 | 19 | 2204-738-313-00 | 124 | 21 |
| | 71 | 9 | 2204-589-063-00 | 96 | 15 | | 125 | 21 |
| 2204-530-200-00 | 64 | 22 | 2204-589-065-00 | 96 | 13 | 2204-738-318-10 | 154 | 16 |
| | 64 | 54 | | 96 | 18 | | 155 | 16 |
| | 67 | 22 | | 96 | 20 | 2204-738-319-00 | 154 | 26 |
| | 68 | 21 | | 96 | 33 | | 155 | 26 |
| 2204-530-300-00 | 79 | 14 | | 96 | 40 | 2204-738-323-00 | 124 | 22 |
| | 81 | 14 | 2204-589-066-00 | 96 | 5 | | 125 | 22 |
| 2204-536-209-00 | 89 | 29 | | 96 | 27 | 2204-738-325-00 | 154 | 27 |
| 2204-536-551-00 | 79 | 19 | 2204-589-067-00 | 96 | 24 | | 155 | 27 |
| | 80 | 18 | 2204-589-068-00 | 96 | 7 | 2204-738-340-10 | 124 | 2 |
| | 81 | 19 | | 96 | 29 | 2204-738-412-10 | 154 | 2 |
| 2204-537-002-00 | 51 | 7 | 2204-589-500-00 | 96 | 1 | | 155 | 2 |
| | 82 | 17 | 2204-589-510-00 | 96 | 25 | 2204-738-413-10 | 154 | 14 |
| | 83 | 17 | 2204-601-007-10 | 3 | 5 | | 155 | 14 |
| | 88 | 4 | | 29 | 3 | 2204-738-414-10 | 154 | 11 |
| 2204-537-202-00 | 82 | 6 | 2204-607-022-00 | 100 | 40 | | 155 | 11 |
| | 83 | 6 | 2204-706-011-10 | 120 | 2 | 2204-738-440-60 | 124 | 1 |

# Numerical Index




| Part Code | Fig. | Key | Part Code | Fig. | Key | Part Code | Fig. | Key |
|---|---|---|---|---|---|---|---|---|
| 2204-738-440-70 | 124 | 1-A | 2213-101-015-10 | 89 | 27 | 2213-516-002-11 | 68 | 47 |
| 2204-738-440-80 | 124 | 1-B | 2213-101-016-00 | 1 | 22 | 2213-516-006-00 | 119 | 11 |
| 2204-738-450-20 | 124 | 20 | 2213-102-002-00 | 2 | 15 | 2213-517-003-10 | 73 | 4 |
| 2204-738-450-30 | 124 | 20-A | 2213-102-400-00 | 2 | 1 | 2213-517-201-00 | 73 | 2 |
| 2204-739-273-00 | 125 | 5 | 2213-102-401-00 | 2 | 2 | 2213-581-200-10 | 92 | 6 |
| 2204-739-275-20 | 125 | 10 | 2213-102-402-00 | 2 | 3 | | 93 | 6 |
| 2204-739-277-00 | 125 | 11 | 2213-102-403-00 | 2 | 4 | 2213-582-061-00 | 94 | 2 |
| 2204-739-282-20 | 125 | 3 | 2213-102-404-00 | 2 | 5 | | 94 | 13 |
| 2204-739-283-00 | 125 | 5-A | 2213-102-405-00 | 2 | 6 | 2213-582-062-00 | 94 | 15 |
| 2204-739-307-00 | 155 | 28 | 2213-111-002-10 | 5 | 18 | 2213-582-066-10 | 94 | 1 |
| 2204-739-340-10 | 125 | 2 | 2213-111-300-10 | 5 | 3 | 2213-582-068-00 | 94 | 16 |
| 2204-739-440-60 | 125 | 1 | 2213-137-004-00 | 10 | 9 | 2213-582-069-00 | 94 | 6 |
| 2204-739-440-70 | 125 | 1-A | 2213-204-200-00 | 14 | 7 | 2213-583-053-00 | 95 | 23 |
| 2204-739-440-80 | 125 | 1-B | 2213-310-004-00 | 26 | 3 | 2213-586-200-11 | 65 | 8 |
| 2204-739-450-20 | 125 | 20 | | 26 | 48 | 2213-607-041-10 | 100 | 26 |
| 2204-739-450-30 | 125 | 20-A | 2213-330-006-10 | 33 | 4 | 2213-607-042-20 | 100 | 27 |
| 2204-803-015-20 | 129 | 35 | | 34 | 4 | 2213-701-023-00 | 9 | 29 |
| 2204-803-016-20 | 129 | 36 | | 35 | 4 | | 116 | 19 |
| 2204-803-024-00 | 129 | 41 | | 36 | 4 | 2213-703-210-10 | 118 | 1 |
| 2204-803-025-00 | 129 | 40 | 2213-336-003-20 | 39 | 14 | 2213-715-005-00 | 149 | 16 |
| 2204-803-068-00 | 108 | 6 | 2213-336-004-00 | 39 | 16 | 2213-715-006-00 | 149 | 17 |
| | 111 | 32 | 2213-413-001-10 | 49 | 3 | 2213-715-007-00 | 149 | 18 |
| | 112 | 45 | 2213-413-300-00 | 49 | 1 | 2213-715-350-00 | 149 | 13 |
| | 121 | 22 | 2213-422-022-00 | 100 | 35 | 2213-715-360-00 | 149 | 14 |
| | 129 | 23 | 2213-508-004-00 | 28 | 2 | 2213-738-301-30 | 154 | 1 |
| | 129 | 39 | | 58 | 9 | 2213-738-301-40 | 154 | 1-A |
| 2204-803-350-00 | 129 | 37 | | 58 | 12 | 2213-739-301-30 | 155 | 1 |
| 2204-804-400-00 | 130 | 2 | | 59 | 9 | 2213-739-301-40 | 155 | 1-A |
| 2204-805-005-10 | 131 | 22 | | 59 | 12 | 2213-801-005-00 | 118 | 5 |
| 2204-805-010-10 | 131 | 31 | | 60 | 11 | 2213-801-007-00 | 118 | 6 |
| 2204-805-025-00 | 131 | 34 | | 60 | 13 | 2213-801-008-00 | 118 | 7 |
| 2204-805-064-00 | 131 | 32 | | 61 | 11 | 2213-801-014-00 | 118 | 9 |
| 2204-831-001-00 | 130 | 17 | | 61 | 13 | 2213-801-016-00 | 126 | 55 |
| 2204-916-001-00 | 134 | 8 | 2213-512-003-10 | 63 | 2 | 2213-803-007-10 | 129 | 11 |
| | 135 | 8 | 2213-513-020-00 | 65 | 23 | 2213-803-009-10 | 129 | 33 |
| 2204-916-022-20 | 140 | 3 | 2213-513-520-12 | 65 | 1 | 2213-803-210-10 | 129 | 3 |
| 2209-508-013-00 | 63 | 10 | 2213-513-530-12 | 65 | 2 | 2213-803-230-10 | 129 | 4 |
| 2209-518-002-10 | 39 | 26 | 2213-513-610-02 | 65 | 22 | 2213-804-007-00 | 130 | 8 |
| 2209-801-203-00 | 133 | 2 | 2213-513-660-02 | 65 | 19 | | 130 | 42 |
| 2212-581-009-00 | 82 | 24 | 2213-513-670-02 | 65 | 20 | 2213-916-002-00 | 134 | 3 |
| | 83 | 24 | 2213-513-760-00 | 64 | 60 | | 135 | 3 |
| 2212-738-001-00 | 150 | 1 | | 67 | 60 | 2213-916-003-00 | 134 | 18 |
| 2213-101-001-10 | 1 | 1 | | 68 | 59 | | 135 | 18 |
| 2213-101-002-10 | 1 | 2 | 2213-516-002-11 | 64 | 48 | 2213-916-005-00 | 137 | 12 |
| 2213-101-015-10 | 1 | 21 | | 67 | 48 | | 138 | 12 |

# Numerical Index




| Part Code | Fig. | Key | Part Code | Fig. | Key | Part Code | Fig. | Key |
|---|---|---|---|---|---|---|---|---|
| 2220-703-001-00 | 118 | 3 | 2232-204-210-00 | 14 | 14 | 2232-211-033-10 | 18 | 14 |
| 2221-111-200-10 | 5 | 13 | 2232-207-001-00 | 15 | 1 | 2232-211-034-00 | 18 | 17 |
| 2232-102-023-00 | 2 | 46 | 2232-207-004-00 | 15 | 4 | 2232-211-035-00 | 18 | 13 |
| 2232-105-007-10 | 3 | 3 | 2232-207-202-00 | 156 | 2 | 2232-211-038-00 | 18 | 4 |
| 2232-111-001-10 | 5 | 1 | 2232-207-203-00 | 156 | 3 | 2232-211-200-10 | 18 | 29 |
| 2232-111-006-00 | 5 | 11 | 2232-207-204-00 | 156 | 4 | 2232-212-001-00 | 19 | 3 |
| 2232-111-007-00 | 5 | 10 | 2232-207-205-00 | 156 | 5 | 2232-212-003-00 | 19 | 16 |
| 2232-124-001-00 | 6 | 12 | 2232-207-206-00 | 156 | 6 | 2232-212-200-10 | 19 | 1 |
| 2232-124-003-00 | 6 | 5 | 2232-207-207-00 | 156 | 7 | 2232-212-210-00 | 19 | 8 |
| 2232-124-200-20 | 6 | 1 | 2232-207-208-00 | 156 | 8 | 2232-212-220-00 | 19 | 14 |
| 2232-124-240-00 | 6 | 8 | 2232-207-209-00 | 156 | 9 | 2232-213-002-10 | 20 | 2 |
| 2232-125-001-00 | 7 | 6 | 2232-207-211-00 | 156 | 10 | | 20 | 9 |
| 2232-125-003-00 | 7 | 26 | 2232-207-212-00 | 156 | 11 | 2232-213-200-20 | 20 | 8 |
| 2232-125-005-00 | 7 | 28 | 2232-207-213-00 | 156 | 12 | 2232-213-210-20 | 20 | 13 |
| 2232-125-006-00 | 7 | 3 | 2232-208-001-20 | 16 | 1 | 2232-213-220-40 | 20 | 1 |
| 2232-125-007-00 | 7 | 24 | 2232-208-001-40 | 16 | 1-A | 2232-215-210-00 | 21 | 1 |
| 2232-125-008-00 | 7 | 29 | 2232-208-002-00 | 16 | 17 | 2232-215-230-10 | 21 | 4 |
| 2232-125-009-00 | 7 | 25 | 2232-208-003-00 | 16 | 16 | 2232-302-001-20 | 23 | 22 |
| 2232-125-200-00 | 7 | 1 | 2232-208-004-00 | 16 | 18 | 2232-302-002-10 | 23 | 14 |
| 2232-125-230-00 | 7 | 17 | 2232-208-005-10 | 16 | 15 | 2232-302-003-00 | 23 | 20 |
| 2232-125-250-00 | 7 | 8 | 2232-208-006-00 | 16 | 12 | 2232-302-006-00 | 23 | 9 |
| 2232-132-001-00 | 9 | 26 | 2232-208-007-00 | 16 | 13 | 2232-302-210-00 | 23 | 1 |
| 2232-132-004-10 | 9 | 9 | 2232-208-008-00 | 16 | 19 | 2232-303-260-10 | 24 | 1 |
| 2232-132-005-10 | 9 | 7 | 2232-208-009-10 | 16 | 2 | 2232-304-200-30 | 25 | 4 |
| 2232-132-008-00 | 9 | 1 | 2232-208-011-10 | 16 | 3 | 2232-310-001-30 | 26 | 1 |
| 2232-132-009-00 | 9 | 38 | 2232-208-011-30 | 16 | 3-A | 2232-310-002-10 | 26 | 16 |
| 2232-132-210-10 | 9 | 18 | 2232-208-014-00 | 16 | 4 | 2232-310-005-00 | 26 | 12 |
| 2232-132-220-00 | 9 | 11 | 2232-209-001-10 | 17 | 4 | 2232-310-006-00 | 26 | 4 |
| 2232-132-230-20 | 9 | 25 | 2232-209-005-00 | 17 | 7 | 2232-310-007-00 | 26 | 8 |
| 2232-132-240-20 | 9 | 31 | 2232-209-007-00 | 17 | 1 | 2232-310-012-10 | 26 | 39 |
| 2232-132-280-00 | 9 | 20-A | 2232-211-001-20 | 18 | 1 | 2232-310-013-10 | 26 | 31 |
| 2232-201-001-50 | 11 | 1 | 2232-211-003-00 | 18 | 5 | 2232-310-015-00 | 26 | 29 |
| 2232-201-002-20 | 11 | 2 | 2232-211-004-00 | 18 | 6 | 2232-310-018-00 | 26 | 14 |
| 2232-201-003-10 | 11 | 15 | 2232-211-005-00 | 18 | 7 | 2232-310-019-00 | 26 | 15 |
| 2232-201-004-00 | 11 | 4 | 2232-211-006-20 | 18 | 8 | 2232-310-031-00 | 26 | 34 |
| 2232-201-005-00 | 11 | 17 | 2232-211-007-00 | 18 | 16 | 2232-310-032-00 | 26 | 35 |
| 2232-201-006-00 | 11 | 14 | 2232-211-013-00 | 18 | 26 | 2232-310-033-00 | 26 | 36 |
| 2232-201-007-10 | 11 | 21 | 2232-211-014-10 | 18 | 27 | 2232-310-200-00 | 26 | 46 |
| 2232-201-008-10 | 11 | 22 | 2232-211-015-10 | 18 | 20 | 2232-310-210-00 | 26 | 47 |
| 2232-204-001-20 | 14 | 1 | 2232-211-016-00 | 18 | 31 | 2232-317-001-10 | 28 | 1 |
| 2232-204-002-30 | 14 | 2 | 2232-211-017-00 | 18 | 18 | 2232-320-750-00 | 29 | 1 |
| 2232-204-005-00 | 14 | 5 | 2232-211-018-00 | 18 | 15 | 2232-320-750-10 | 29 | 1-A |
| 2232-204-006-00 | 14 | 6 | 2232-211-024-00 | 18 | 19 | 2232-320-750-30 | 29 | 1-B |
| 2232-204-008-00 | 14 | 12 | 2232-211-025-00 | 18 | 33 | 2232-322-001-00 | 31 | 4 |
| | 15 | 26 | 2232-211-025-10 | 18 | 33-A | | 31 | 7 |

# Numerical Index




| Part Code | Fig. | Key | Part Code | Fig. | Key | Part Code | Fig. | Key |
|---|---|---|---|---|---|---|---|---|
| 2232-322-001-00 | 111 | 30 | 2232-330-022-00 | 36 | 35 | 2232-331-250-30 | 38 | 1 |
| 2232-322-200-10 | 31 | 1 | 2232-330-023-00 | 33 | 20 | 2232-331-300-00 | 37 | 10 |
| 2232-322-210-40 | 31 | 2 | | 34 | 21 | | 38 | 10 |
| 2232-322-220-10 | 31 | 6 | | 35 | 20 | 2232-331-302-00 | 37 | 11 |
| 2232-322-230-20 | 31 | 9 | | 36 | 21 | | 38 | 11 |
| 2232-325-001-00 | 32 | 1 | 2232-330-032-00 | 33 | 18 | 2232-336-001-00 | 39 | 27 |
| 2232-325-003-10 | 32 | 8 | | 34 | 18 | 2232-336-002-00 | 39 | 19 |
| 2232-330-001-20 | 35 | 1 | | 35 | 18 | 2232-336-003-00 | 39 | 31 |
| | 36 | 1 | | 36 | 18 | 2232-336-200-20 | 39 | 28 |
| 2232-330-001-30 | 33 | 1 | 2232-330-033-00 | 33 | 12 | 2232-340-200-10 | 41 | 1 |
| | 34 | 1 | | 34 | 12 | 2232-343-200-20 | 42 | 1 |
| | 35 | 1-A | | 35 | 12 | 2232-401-001-00 | 45 | 6 |
| | 36 | 1-A | | 36 | 12 | 2232-407-210-00 | 46 | 3 |
| 2232-330-002-20 | 33 | 2 | 2232-330-039-00 | 33 | 37 | 2232-409-004-10 | 47 | 22 |
| | 34 | 2 | | 35 | 37 | 2232-409-007-10 | 47 | 4 |
| | 35 | 2 | 2232-330-041-10 | 33 | 45 | 2232-409-200-00 | 47 | 1 |
| | 36 | 2 | | 35 | 45 | 2232-409-300-00 | 146 | 1 |
| 2232-330-004-00 | 33 | 26 | 2232-330-042-00 | 33 | 16 | 2232-409-320-00 | 146 | 3 |
| | 34 | 27 | | 34 | 16 | 2232-411-001-00 | 48 | 3 |
| | 35 | 26 | | 35 | 16 | 2232-411-300-00 | 48 | 1 |
| | 36 | 27 | | 36 | 16 | 2232-414-210-00 | 50 | 3 |
| 2232-330-012-00 | 35 | 31 | 2232-330-043-10 | 33 | 49 | | 51 | 2 |
| 2232-330-013-10 | 33 | 14 | | 34 | 45 | 2232-415-001-00 | 50 | 10 |
| | 34 | 14 | | 35 | 49 | 2232-415-002-00 | 51 | 4 |
| | 35 | 14 | | 36 | 45 | 2232-415-003-20 | 51 | 10 |
| | 36 | 14 | 2232-330-045-00 | 33 | 57 | 2232-415-300-00 | 51 | 1 |
| 2232-330-015-00 | 33 | 19 | | 34 | 53 | 2232-422-001-20 | 52 | 11 |
| | 34 | 20 | | 35 | 57 | 2232-422-002-00 | 52 | 19 |
| | 35 | 19 | | 36 | 53 | 2232-422-024-00 | 52 | 13-A |
| | 36 | 20 | 2232-330-052-00 | 33 | 66 | 2232-422-025-00 | 33 | 68 |
| 2232-330-016-10 | 33 | 21 | | 35 | 69 | | 35 | 71 |
| | 34 | 22 | 2232-330-053-00 | 33 | 13 | 2232-422-031-10 | 52 | 15 |
| | 35 | 21 | | 34 | 13 | 2232-422-200-10 | 52 | 1 |
| | 36 | 22 | | 35 | 13 | 2232-422-210-00 | 52 | 6 |
| 2232-330-017-00 | 33 | 22 | | 36 | 13 | 2232-422-230-20 | 52 | 12 |
| | 34 | 23 | 2232-330-054-00 | 33 | 33 | 2232-422-230-30 | 52 | 12-A |
| | 35 | 22 | | 35 | 33 | 2232-422-270-10 | 52 | 16 |
| | 36 | 23 | 2232-330-220-00 | 33 | 42 | 2232-435-001-00 | 53 | 3 |
| 2232-330-018-50 | 33 | 17 | | 34 | 39 | 2232-435-003-00 | 53 | 5 |
| | 34 | 17 | | 35 | 42 | 2232-501-003-00 | 55 | 4 |
| | 35 | 17 | | 36 | 39 | 2232-501-004-10 | 55 | 5 |
| | 36 | 17 | 2232-331-240-10 | 37 | 6 | | 56 | 4 |
| 2232-330-022-00 | 33 | 35 | 2232-331-240-20 | 37 | 6-A | 2232-501-011-00 | 56 | 7 |
| | 34 | 35 | 2232-331-250-20 | 37 | 1 | 2232-501-032-00 | 55 | 2 |
| | 35 | 35 | 2232-331-250-30 | 37 | 1-A | | 56 | 2 |

| Part Code | Fig. | Key | Part Code | Fig. | Key | Part Code | Fig. | Key |
|---|---|---|---|---|---|---|---|---|
| 2232-501-200-50 | 55 | 1 | 2232-536-001-10 | 81 | 28 | 2232-549-520-00 | 90 | 22 |
| | 56 | 1 | 2232-536-002-00 | 80 | 28 | 2232-556-001-00 | 91 | 17 |
| 2232-508-001-10 | 58 | 1 | | 81 | 29 | 2232-556-005-30 | 91 | 1 |
| | 59 | 1 | 2232-536-003-10 | 79 | 7 | 2232-556-007-00 | 91 | 34 |
| 2232-508-003-00 | 58 | 8 | | 80 | 7 | 2232-556-022-00 | 91 | 29 |
| | 58 | 11 | | 81 | 7 | 2232-556-023-10 | 15 | 9 |
| | 59 | 8 | 2232-536-006-00 | 79 | 32 | | 91 | 6 |
| | 59 | 11 | | 80 | 31 | 2232-556-024-00 | 91 | 10 |
| 2232-508-011-00 | 58 | 4 | | 81 | 32 | 2232-556-032-00 | 23 | 17 |
| | 59 | 4 | 2232-536-007-00 | 79 | 5 | | 91 | 23 |
| 2232-508-012-00 | 58 | 5 | | 80 | 5 | 2232-556-210-00 | 91 | 9 |
| | 59 | 5 | | 81 | 5 | 2232-556-210-10 | 91 | 9-A |
| 2232-508-013-00 | 58 | 16 | 2232-536-008-00 | 79 | 6 | 2232-556-230-00 | 23 | 16 |
| | 59 | 16 | | 80 | 6 | | 44 | 34 |
| 2232-508-014-00 | 58 | 17 | | 81 | 6 | | 91 | 22 |
| | 59 | 17 | 2232-536-011-00 | 80 | 32 | 2232-556-260-00 | 91 | 20 |
| 2232-508-021-00 | 58 | 19 | | 81 | 33 | 2232-556-270-10 | 91 | 13 |
| | 59 | 19 | 2232-536-012-00 | 80 | 39 | 2232-556-280-10 | 91 | 14 |
| 2232-508-280-00 | 58 | 20 | 2232-536-012-10 | 79 | 40 | 2232-556-290-10 | 91 | 15 |
| | 59 | 20 | | 80 | 39-A | 2232-556-300-10 | 91 | 16 |
| 2232-510-001-10 | 62 | 1 | | 81 | 40 | 2232-556-320-10 | 91 | 5 |
| 2232-510-002-10 | 62 | 3 | 2232-536-250-00 | 79 | 12 | 2232-581-001-00 | 92 | 4 |
| 2232-513-001-10 | 67 | 62 | | 80 | 12 | | 93 | 4 |
| | 68 | 61 | | 81 | 12 | 2232-581-005-00 | 50 | 8-A |
| 2232-513-004-00 | 67 | 73 | 2232-536-290-00 | 79 | 26 | 2232-581-200-10 | 93 | 1 |
| | 68 | 72 | | 80 | 25 | 2232-581-230-00 | 92 | 5 |
| 2232-513-007-00 | 67 | 63 | | 81 | 26 | | 93 | 5 |
| | 68 | 62 | 2232-536-300-00 | 80 | 1 | 2232-582-011-00 | 94 | 22 |
| 2232-513-008-00 | 64 | 14 | 2232-536-300-10 | 79 | 1 | 2232-583-001-00 | 95 | 17 |
| | 64 | 46 | | 80 | 1-A | 2232-583-003-10 | 95 | 22 |
| | 67 | 14 | | 81 | 1 | 2232-583-004-00 | 95 | 38 |
| | 67 | 46 | 2232-536-330-00 | 79 | 11 | 2232-583-005-00 | 52 | 2 |
| | 68 | 13 | | 80 | 11 | | 95 | 2 |
| | 68 | 45 | | 81 | 11 | 2232-583-009-00 | 95 | 33 |
| 2232-513-009-00 | 67 | 78 | 2232-537-660-00 | 83 | 13 | 2232-583-016-10 | 95 | 20 |
| | 68 | 77 | 2232-537-661-00 | 83 | 16 | 2232-583-200-20 | 95 | 1 |
| 2232-513-320-00 | 67 | 72 | 2232-537-904-00 | 82 | 11 | 2232-583-210-10 | 95 | 8 |
| | 68 | 71 | | 83 | 11 | 2232-583-220-00 | 95 | 13 |
| 2232-513-400-00 | 67 | 75 | 2232-537-950-00 | 82 | 13 | 2232-583-220-10 | 95 | 13-A |
| 2232-517-001-00 | 73 | 8 | 2232-537-951-00 | 82 | 16 | 2232-583-280-10 | 95 | 31 |
| 2232-517-200-00 | 73 | 1 | 2232-541-230-00 | 85 | 2 | 2232-601-001-00 | 97 | 6 |
| 2232-532-004-00 | 78 | 6 | 2232-546-001-00 | 88 | 6 | 2232-601-002-00 | 97 | 8 |
| 2232-532-005-00 | 78 | 7 | 2232-546-210-10 | 88 | 3 | 2232-603-002-10 | 95 | 19 |
| 2232-532-200-00 | 78 | 1 | 2232-546-210-20 | 88 | 3-A | | 100 | 8 |
| 2232-536-001-10 | 80 | 27 | 2232-549-510-00 | 90 | 21 | | 101 | 7 |

# Numerical Index



| Part Code | Fig. | Key | Part Code | Fig. | Key | Part Code | Fig. | Key |
|---|---|---|---|---|---|---|---|---|
| 2232-603-002-10 | 102 | 7 | 2232-607-014-00 | 100 | 43 | 2232-645-017-00 | 108 | 28 |
| | 116 | 4 | 2232-607-015-00 | 100 | 44 | 2232-645-018-00 | 108 | 14 |
| | 119 | 4 | 2232-607-016-00 | 100 | 45 | 2232-645-019-10 | 108 | 68 |
| 2232-603-003-10 | 95 | 18 | 2232-607-017-10 | 100 | 47 | 2232-645-021-00 | 108 | 58 |
| | 100 | 7 | 2232-607-018-00 | 100 | 49 | | 109 | 24 |
| | 101 | 6 | 2232-607-019-10 | 100 | 16 | | 111 | 9 |
| | 102 | 6 | 2232-607-020-00 | 100 | 41 | | 111 | 21 |
| | 116 | 3 | 2232-607-027-00 | 100 | 14 | | 111 | 33 |
| | 119 | 5 | 2232-607-031-00 | 100 | 57 | | 111 | 38 |
| 2232-603-011-00 | 98 | 3 | 2232-607-210-00 | 100 | 29 | | 112 | 23 |
| 2232-603-012-00 | 98 | 3-A | 2232-607-230-00 | 100 | 55 | | 112 | 40 |
| 2232-605-006-20 | 99 | 17 | 2232-607-230-10 | 100 | 55-A | | 113 | 86 |
| | 147 | 14 | 2232-607-240-00 | 100 | 29-A | 2232-645-022-00 | 108 | 2 |
| 2232-605-007-10 | 99 | 1 | 2232-608-001-00 | 101 | 8 | | 112 | 22 |
| | 147 | 3 | 2232-608-005-20 | 101 | 4 | | 113 | 73 |
| 2232-605-008-00 | 99 | 4 | | 102 | 3 | 2232-645-023-00 | 95 | 21 |
| | 147 | 5 | 2232-608-006-00 | 101 | 1-A | | 108 | 15 |
| 2232-605-010-10 | 99 | 15 | 2232-608-007-00 | 101 | 9 | | 111 | 42 |
| | 147 | 25 | 2232-608-008-00 | 101 | 14 | | 111 | 49 |
| 2232-605-011-10 | 99 | 12 | 2232-608-009-00 | 101 | 17 | | 112 | 18 |
| | 147 | 13 | 2232-608-010-10 | 101 | 11 | 2232-645-025-00 | 108 | 30 |
| 2232-605-012-10 | 99 | 10 | 2232-608-014-00 | 101 | 10 | 2232-645-310-00 | 108 | 62 |
| | 147 | 11 | 2232-608-018-00 | 101 | 2 | 2232-645-420-00 | 108 | 33 |
| 2232-605-016-20 | 99 | 23 | 2232-608-021-00 | 101 | 12 | 2232-651-002-00 | 109 | 5 |
| | 147 | 20 | 2232-612-220-10 | 102 | 5 | 2232-651-003-00 | 109 | 8 |
| 2232-605-017-00 | 99 | 2 | 2232-614-001-00 | 103 | 2 | 2232-651-004-00 | 109 | 17 |
| | 147 | 23 | 2232-614-003-00 | 89 | 14 | 2232-655-001-00 | 111 | 5 |
| 2232-605-210-40 | 99 | 3 | | 103 | 4 | 2232-655-002-00 | 111 | 2 |
| | 147 | 4 | 2232-616-001-00 | 104 | 1 | 2232-655-003-00 | 111 | 6 |
| 2232-605-230-40 | 99 | 7 | 2232-616-200-10 | 104 | 4 | 2232-655-006-10 | 111 | 14 |
| | 147 | 8 | 2232-616-220-20 | 104 | 2 | 2232-655-007-00 | 111 | 15 |
| 2232-605-240-10 | 99 | 6 | | 147 | 22 | 2232-655-008-00 | 111 | 4 |
| | 147 | 7 | 2232-616-230-10 | 104 | 5 | 2232-655-009-00 | 111 | 22 |
| 2232-605-900-00 | 147 | 1 | 2232-619-002-00 | 107 | 3 | 2232-655-010-10 | 111 | 25 |
| 2232-605-910-00 | 147 | 2 | 2232-619-003-20 | 107 | 8 | 2232-655-011-10 | 111 | 35 |
| 2232-607-001-20 | 100 | 1 | 2232-619-004-00 | 107 | 9 | 2232-655-012-10 | 111 | 27 |
| 2232-607-001-30 | 100 | 1-A | 2232-619-240-00 | 107 | 1 | 2232-655-015-00 | 111 | 12 |
| 2232-607-002-00 | 100 | 2 | 2232-619-250-00 | 107 | 2 | 2232-655-016-00 | 111 | 13 |
| 2232-607-003-10 | 100 | 9 | 2232-619-260-10 | 107 | 6 | 2232-655-260-10 | 111 | 20 |
| 2232-607-004-00 | 100 | 15 | 2232-645-007-10 | 108 | 16 | 2232-655-500-10 | 143 | 3 |
| 2232-607-005-20 | 100 | 20 | 2232-645-011-10 | 108 | 9 | 2232-656-020-00 | 111 | 17 |
| 2232-607-008-00 | 100 | 23 | 2232-645-013-00 | 108 | 12 | 2232-656-021-00 | 111 | 41 |
| 2232-607-009-00 | 100 | 24 | 2232-645-014-20 | 108 | 27 | 2232-656-022-00 | 111 | 37 |
| 2232-607-011-00 | 100 | 25 | 2232-645-015-10 | 108 | 7 | 2232-665-002-10 | 112 | 17 |
| 2232-607-012-00 | 100 | 37 | 2232-645-016-00 | 108 | 29 | 2232-665-005-10 | 112 | 36 |

| Part Code | Fig. | Key | Part Code | Fig. | Key | Part Code | Fig. | Key |
|---|---|---|---|---|---|---|---|---|
| 2232-665-006-20 | 112 | 37 | 2232-675-218-00 | 113 | 20 | 2232-686-004-20 | 157 | 21-A |
| 2232-665-500-10 | 111 | 7 | | 113 | 56 | | 158 | 19-A |
| 2232-665-510-10 | 112 | 33 | 2232-675-220-00 | 113 | 7 | | 159 | 21 |
| 2232-665-601-00 | 112 | 43 | | 113 | 43 | | 160 | 19 |
| 2232-666-005-00 | 112 | 46 | 2232-675-230-10 | 113 | 85 | 2232-686-010-10 | 157 | 38 |
| 2232-672-007-00 | 115 | 3 | 2232-675-240-00 | 113 | 7-A | | 158 | 36 |
| 2232-672-008-10 | 115 | 4 | | 113 | 43-A | 2232-686-010-20 | 157 | 38-A |
| 2232-675-001-10 | 113 | 93 | 2232-675-251-00 | 113 | 5-A | | 158 | 36-A |
| 2232-675-004-00 | 113 | 77 | | 113 | 30-A | | 159 | 38 |
| 2232-675-006-00 | 113 | 79 | | 113 | 41-A | | 160 | 36 |
| 2232-675-007-00 | 113 | 81 | | 113 | 66-A | 2232-686-012-10 | 157 | 24 |
| 2232-675-008-00 | 113 | 80 | 2232-675-252-00 | 113 | 32-A | | 158 | 22 |
| 2232-675-021-00 | 115 | 13 | | 113 | 68-A | | 159 | 24 |
| 2232-675-022-00 | 115 | 15 | 2232-675-253-00 | 113 | 33-A | | 160 | 22 |
| 2232-675-023-00 | 115 | 14 | | 113 | 69-A | 2232-686-016-00 | 157 | 13 |
| 2232-675-024-00 | 115 | 17 | 2232-675-254-00 | 113 | 11 | | 158 | 11 |
| 2232-675-025-00 | 115 | 16 | | 113 | 47 | | 159 | 13 |
| 2232-675-201-00 | 113 | 1 | 2232-675-255-00 | 113 | 13 | | 160 | 11 |
| | 113 | 37 | | 113 | 49 | 2232-686-019-20 | 157 | 26 |
| 2232-675-202-00 | 113 | 2 | 2232-675-256-00 | 113 | 14 | | 158 | 24 |
| | 113 | 38 | | 113 | 50 | | 159 | 26 |
| 2232-675-202-10 | 113 | 2-A | 2232-675-257-00 | 113 | 17 | | 160 | 24 |
| | 113 | 38-A | | 113 | 53 | 2232-686-020-60 | 157 | 27 |
| 2232-675-204-00 | 113 | 24 | 2232-675-258-00 | 113 | 19 | | 158 | 25 |
| | 113 | 60 | | 113 | 55 | 2232-686-020-70 | 157 | 27-A |
| 2232-675-205-00 | 113 | 8 | 2232-675-258-10 | 113 | 19-A | | 158 | 25-A |
| | 113 | 44 | | 113 | 55-A | | 159 | 27 |
| 2232-675-207-00 | 113 | 28 | 2232-675-259-00 | 113 | 3-A | | 160 | 25 |
| | 113 | 64 | | 113 | 39-A | 2232-686-021-30 | 157 | 28 |
| 2232-675-209-00 | 113 | 34 | 2232-675-261-00 | 113 | 16 | | 158 | 26 |
| | 113 | 70 | | 113 | 52 | | 159 | 28 |
| 2232-675-209-10 | 113 | 34-A | 2232-675-270-00 | 113 | 10-A | | 160 | 26 |
| | 113 | 70-A | | 113 | 46-A | 2232-686-023-10 | 157 | 29 |
| 2232-675-211-00 | 113 | 36 | 2232-676-001-10 | 113 | 75 | | 158 | 27 |
| | 113 | 72 | 2232-676-031-10 | 113 | 89 | 2232-686-023-20 | 157 | 29-A |
| 2232-675-211-10 | 113 | 36-A | 2232-676-031-20 | 113 | 89-A | | 158 | 27-A |
| | 113 | 72-A | 2232-676-031-30 | 113 | 89-B | | 159 | 29 |
| 2232-675-212-10 | 113 | 9 | 2232-676-031-40 | 113 | 89-C | | 160 | 27 |
| | 113 | 45 | 2232-676-032-00 | 113 | 91 | 2232-686-024-00 | 157 | 9 |
| 2232-675-213-00 | 113 | 4 | 2232-676-035-00 | 113 | 90 | | 159 | 9 |
| | 113 | 40 | 2232-676-300-20 | 113 | 87 | 2232-687-007-00 | 157 | 6 |
| 2232-675-214-00 | 113 | 35 | 2232-676-300-30 | 113 | 87-A | | 158 | 6 |
| 2232-675-215-00 | 113 | 71 | 2232-676-310-20 | 113 | 88 | | 159 | 6 |
| 2232-675-217-00 | 113 | 15 | 2232-676-310-30 | 113 | 88-A | | 160 | 6 |
| | 113 | 51 | 2232-685-002-00 | 114 | 10 | 2232-691-054-00 | 115 | 25 |

# Numerical Index




| Part Code | Fig. | Key | Part Code | Fig. | Key | Part Code | Fig. | Key |
|---|---|---|---|---|---|---|---|---|
| 2232-691-054-10 | 115 | 25-A | 2232-705-002-10 | 119 | 19 | 2232-801-033-00 | 126 | 64 |
| 2232-691-055-00 | 115 | 27 | 2232-705-004-00 | 119 | 21 | 2232-801-034-10 | 126 | 45 |
| 2232-691-055-10 | 115 | 27-A | 2232-705-250-00 | 119 | 3 | 2232-801-220-00 | 126 | 14 |
| 2232-691-057-20 | 115 | 6 | 2232-706-210-00 | 120 | 4 | 2232-801-430-00 | 126 | 8 |
| 2232-691-058-20 | 115 | 7 | 2232-710-012-00 | 121 | 1 | 2232-801-451-00 | 126 | 17 |
| 2232-691-059-20 | 115 | 8 | 2232-710-013-00 | 121 | 8 | 2232-801-460-00 | 126 | 16 |
| 2232-691-300-00 | 115 | 9 | 2232-710-014-00 | 121 | 9 | 2232-801-480-20 | 126 | 54 |
| 2232-691-300-10 | 115 | 9-A | 2232-710-015-00 | 121 | 15 | 2232-802-002-00 | 128 | 1 |
| 2232-692-004-00 | 115 | 20 | 2232-710-017-10 | 121 | 7 | 2232-802-500-00 | 127 | 6 |
| 2232-692-005-00 | 115 | 21 | 2232-710-019-00 | 121 | 16 | 2232-802-510-00 | 127 | 7 |
| 2232-692-220-20 | 112 | 19 | 2232-710-020-10 | 121 | 17 | 2232-803-001-00 | 129 | 28 |
| 2232-696-300-00 | 115 | 19 | 2232-710-022-00 | 121 | 23 | 2232-803-003-00 | 129 | 26 |
| 2232-701-002-00 | 116 | 18 | 2232-710-023-00 | 121 | 17-A | 2232-803-210-00 | 129 | 25 |
| 2232-701-003-00 | 116 | 32 | 2232-710-280-00 | 121 | 19 | 2232-803-220-00 | 129 | 24 |
| 2232-701-004-00 | 116 | 30 | 2232-710-290-00 | 121 | 16-A | 2232-804-001-00 | 130 | 13 |
| 2232-701-012-20 | 116 | 52 | 2232-711-001-00 | 122 | 25 | 2232-804-002-00 | 130 | 19 |
| 2232-701-013-10 | 116 | 53 | 2232-711-001-10 | 122 | 25-A | 2232-804-200-10 | 130 | 4 |
| 2232-701-017-00 | 116 | 25 | 2232-711-002-00 | 122 | 26 | 2232-804-300-00 | 130 | 5 |
| 2232-701-022-30 | 116 | 31 | 2232-711-002-10 | 122 | 26-A | 2232-804-400-00 | 130 | 7 |
| 2232-701-024-00 | 116 | 49 | 2232-711-003-10 | 122 | 17 | 2232-804-420-00 | 130 | 36 |
| 2232-701-024-10 | 116 | 49-A | 2232-711-004-10 | 122 | 18 | 2232-804-430-00 | 130 | 41 |
| 2232-701-024-20 | 116 | 49-B | 2232-711-005-00 | 122 | 3 | 2232-804-440-20 | 130 | 38 |
| 2232-701-067-00 | 116 | 50 | 2232-711-007-00 | 122 | 9 | 2232-804-450-00 | 130 | 10 |
| 2232-701-068-00 | 116 | 28 | 2232-711-008-00 | 122 | 10 | 2232-804-460-00 | 130 | 11 |
| 2232-701-220-20 | 116 | 46 | 2232-711-011-00 | 122 | 22 | 2232-804-470-10 | 130 | 29 |
| 2232-701-220-30 | 116 | 46-A | 2232-711-013-00 | 122 | 27 | 2232-804-480-10 | 130 | 32 |
| 2232-701-220-40 | 116 | 46-B | 2232-711-014-00 | 122 | 8 | 2232-805-002-00 | 131 | 19 |
| 2232-701-260-30 | 116 | 47 | 2232-711-200-10 | 122 | 11 | 2232-805-003-00 | 131 | 24 |
| 2232-701-260-40 | 116 | 47-A | 2232-711-200-20 | 122 | 11-A | 2232-805-004-00 | 131 | 59 |
| 2232-701-270-10 | 116 | 51 | 2232-711-210-10 | 122 | 12 | 2232-805-006-00 | 131 | 12 |
| 2232-701-300-00 | 148 | 1 | 2232-711-210-20 | 122 | 12-A | 2232-805-007-00 | 131 | 60 |
| 2232-701-310-00 | 116 | 6 | 2232-711-220-50 | 122 | 14 | 2232-805-010-10 | 131 | 43 |
| | 148 | 2 | 2232-711-230-50 | 122 | 15 | 2232-805-011-10 | 131 | 7 |
| 2232-701-320-00 | 148 | 7 | 2232-711-270-00 | 9 | 23 | 2232-805-013-20 | 131 | 2 |
| 2232-701-330-00 | 116 | 9 | | 122 | 20 | 2232-805-014-20 | 131 | 80 |
| | 148 | 8 | 2232-713-002-00 | 123 | 3 | 2232-805-016-00 | 131 | 20 |
| 2232-701-340-00 | 148 | 13 | 2232-738-304-00 | 154 | 9 | 2232-805-021-00 | 131 | 3 |
| 2232-701-350-00 | 116 | 12 | | 155 | 9 | 2232-805-022-10 | 131 | 4 |
| | 148 | 14 | 2232-801-001-00 | 126 | 21 | 2232-805-023-00 | 131 | 61 |
| 2232-702-001-10 | 117 | 1 | 2232-801-005-00 | 126 | 39 | 2232-805-024-00 | 131 | 38 |
| 2232-702-002-10 | 117 | 4 | 2232-801-006-00 | 126 | 29 | 2232-805-025-10 | 131 | 56 |
| 2232-702-003-00 | 100 | 52 | 2232-801-014-00 | 126 | 42 | 2232-805-028-00 | 131 | 6 |
| | 101 | 3 | 2232-801-015-00 | 126 | 44 | 2232-805-029-00 | 131 | 5 |
| 2232-702-007-00 | 117 | 6 | 2232-801-031-00 | 126 | 49 | 2232-805-030-00 | 131 | 40 |
| 2232-705-001-10 | 119 | 18 | 2232-801-032-00 | 126 | 50 | 2232-805-031-00 | 131 | 41 |

| Part Code | Fig. | Key | Part Code | Fig. | Key | Part Code | Fig. | Key |
|---|---|---|---|---|---|---|---|---|
| 2232-805-032-10 | 131 | 57 | 2232-912-047-00 | 138 | 13 | 2233-102-230-00 | 2 | 8 |
| 2232-805-033-10 | 131 | 58 | 2232-912-048-00 | 137 | 14 | 2233-102-250-30 | 2 | 18 |
| 2232-805-034-00 | 131 | 45 | | 138 | 14 | 2233-102-350-20 | 2 | 39 |
| | 131 | 76 | 2232-912-049-00 | 79 | 9 | 2233-102-350-30 | 2 | 39-A |
| 2232-805-051-10 | 131 | 62 | | 81 | 9 | 2233-105-003-00 | 3 | 1 |
| 2232-805-052-10 | 131 | 63 | 2232-912-054-00 | 137 | 5 | 2233-105-004-10 | 3 | 4 |
| | 131 | 64-A | | 138 | 5 | 2233-106-200-10 | 4 | 4 |
| 2232-805-056-00 | 131 | 66 | 2232-912-058-00 | 137 | 10 | 2233-106-210-20 | 4 | 1 |
| 2232-805-210-00 | 131 | 8 | | 138 | 10 | 2233-124-004-00 | 6 | 21 |
| 2232-805-230-20 | 131 | 37 | 2232-912-059-00 | 137 | 11 | 2233-124-005-10 | 6 | 23 |
| 2232-805-300-30 | 131 | 39 | | 138 | 11 | 2233-124-300-00 | 6 | 11 |
| 2232-806-001-10 | 132 | 1 | 2232-925-021-10 | 140 | 1 | 2233-131-002-00 | 8 | 9 |
| 2232-807-001-00 | 133 | 3 | 2232-925-022-00 | 140 | 2 | 2233-131-004-00 | 8 | 11 |
| 2232-807-002-00 | 133 | 6 | 2232-926-009-00 | 141 | 2 | 2233-131-006-00 | 8 | 23 |
| 2232-807-200-10 | 133 | 1 | | 142 | 2 | 2233-131-007-10 | 8 | 15 |
| 2232-901-031-00 | 134 | 15 | 2232-926-011-00 | 141 | 11 | 2233-131-200-00 | 8 | 17 |
| | 135 | 15 | | 142 | 11 | 2233-132-006-30 | 9 | 32 |
| 2232-901-032-00 | 134 | 16 | 2232-926-051-00 | 141 | 1 | 2233-132-006-40 | 9 | 32-A |
| | 135 | 16 | | 142 | 1 | 2233-132-007-30 | 9 | 34 |
| 2232-901-033-00 | 134 | 17 | 2232-926-052-00 | 141 | 3 | 2233-132-007-40 | 9 | 34-A |
| | 135 | 17 | | 142 | 3 | 2233-137-001-00 | 10 | 1 |
| 2232-901-034-00 | 135 | 19 | 2232-926-053-00 | 141 | 4 | 2233-137-009-00 | 10 | 13 |
| 2232-901-035-00 | 135 | 20 | | 142 | 4 | 2233-137-011-00 | 10 | 11 |
| 2232-901-036-00 | 135 | 21 | 2232-926-054-00 | 141 | 5 | 2233-137-200-10 | 10 | 4 |
| 2232-901-037-00 | 142 | 16 | 2232-926-055-00 | 141 | 6 | 2233-137-220-00 | 10 | 2 |
| 2232-912-003-00 | 137 | 1 | | 142 | 6 | 2233-137-230-20 | 10 | 8 |
| | 138 | 1 | 2232-926-056-00 | 141 | 9 | 2233-202-200-00 | 12 | 1 |
| 2232-912-004-00 | 137 | 2 | | 142 | 9 | 2233-203-200-00 | 13 | 1 |
| | 138 | 2 | 2232-926-057-00 | 141 | 10 | 2233-204-001-00 | 14 | 4 |
| 2232-912-021-00 | 137 | 8 | 2232-926-058-00 | 141 | 12 | 2233-207-001-00 | 15 | 6 |
| 2232-912-021-10 | 137 | 8-A | | 142 | 12 | 2233-207-002-00 | 15 | 7 |
| | 138 | 8 | 2232-926-059-00 | 141 | 13 | 2233-207-003-00 | 15 | 25 |
| 2232-912-023-00 | 6 | 4 | | 142 | 13 | 2233-207-006-10 | 15 | 8 |
| 2232-912-027-00 | 137 | 4 | 2232-955-002-10 | 143 | 1 | 2233-207-210-10 | 15 | 22 |
| | 138 | 4 | 2232-955-002-20 | 143 | 1-A | 2233-207-210-20 | 15 | 22-A |
| 2232-912-037-00 | 138 | 19 | 2232-955-002-30 | 143 | 1-B | 2233-207-220-10 | 15 | 23 |
| 2232-912-038-00 | 138 | 20 | 2232-955-002-50 | 143 | 1-C | 2233-207-220-20 | 15 | 23-A |
| 2232-912-039-00 | 142 | 15 | 2233-101-004-00 | 2 | 13 | 2233-207-250-20 | 15 | 5 |
| 2232-912-043-00 | 80 | 9 | 2233-101-005-10 | 2 | 14 | 2233-207-250-30 | 15 | 5-A |
| 2232-912-045-00 | 79 | 13 | 2233-101-006-00 | 2 | 24 | 2233-207-251-00 | 156 | 1 |
| | 80 | 13 | 2233-101-007-00 | 1 | 15 | 2233-207-300-10 | 15 | 11 |
| | 81 | 13 | 2233-101-007-10 | 1 | 15-A | 2233-209-001-00 | 17 | 8 |
| 2232-912-046-00 | 137 | 9 | 2233-101-500-10 | 1 | 11 | 2233-211-200-20 | 18 | 3 |
| | 138 | 9 | 2233-102-008-00 | 2 | 41 | 2233-222-200-20 | 22 | 1 |
| 2232-912-047-00 | 137 | 13 | 2233-102-220-10 | 2 | 9 | 2233-222-210-20 | 22 | 2 |

# Numerical Index




| Part Code | Fig. | Key | Part Code | Fig. | Key | Part Code | Fig. | Key |
|---|---|---|---|---|---|---|---|---|
| 2233-310-002-00 | 26 | 43 | 2233-336-005-00 | 39 | 12 | 2233-409-012-10 | 47 | 18-A |
| 2233-310-005-10 | 26 | 30 | 2233-336-006-00 | 39 | 23 | 2233-409-013-00 | 47 | 19 |
| 2233-310-007-00 | 26 | 37 | 2233-336-200-10 | 39 | 1 | 2233-409-014-10 | 47 | 14 |
| 2233-310-008-00 | 26 | 28 | 2233-336-210-00 | 39 | 3 | 2233-409-800-00 | 146 | 2 |
| 2233-310-011-00 | 26 | 21 | 2233-336-220-00 | 39 | 7 | 2233-414-200-10 | 50 | 1 |
| 2233-310-013-00 | 26 | 26 | 2233-336-230-00 | 39 | 11 | 2233-435-200-10 | 53 | 1 |
| 2233-310-014-10 | 26 | 38 | 2233-337-001-10 | 40 | 21 | 2233-501-063-10 | 55 | 8 |
| 2233-310-400-00 | 26 | 20 | 2233-337-001-20 | 40 | 21-A | | 56 | 10 |
| 2233-316-200-10 | 27 | 1 | 2233-337-002-10 | 40 | 22 | 2233-507-002-00 | 57 | 1 |
| 2233-321-200-00 | 30 | 1 | 2233-337-002-20 | 40 | 22-A | 2233-508-001-00 | 58 | 7 |
| 2233-321-200-10 | 30 | 1-A | 2233-337-003-00 | 40 | 5 | | 59 | 7 |
| 2233-325-200-00 | 32 | 5 | | 40 | 15 | 2233-508-002-00 | 58 | 10 |
| 2233-325-200-20 | 32 | 5-A | 2233-337-004-00 | 40 | 6 | 2233-508-006-00 | 59 | 10 |
| 2233-330-004-10 | 34 | 8 | 2233-337-005-10 | 40 | 24 | 2233-509-001-00 | 60 | 12 |
| | 36 | 8 | 2233-337-005-20 | 40 | 24-A | | 61 | 12 |
| 2233-330-005-10 | 33 | 8 | 2233-337-006-10 | 40 | 25 | 2233-509-002-00 | 60 | 10 |
| | 34 | 19 | 2233-337-006-20 | 40 | 25-A | | 61 | 10 |
| | 35 | 8 | 2233-337-200-10 | 40 | 13 | 2233-509-200-40 | 60 | 1 |
| | 36 | 19 | 2233-337-210-00 | 40 | 1 | | 61 | 1 |
| 2233-330-041-00 | 33 | 65 | 2233-337-220-00 | 40 | 3 | 2233-509-200-50 | 60 | 1-A |
| | 35 | 68 | 2233-337-230-00 | 40 | 26 | | 61 | 1-A |
| 2233-330-051-00 | 33 | 46 | 2233-337-240-00 | 40 | 29 | 2233-509-230-00 | 60 | 5 |
| | 34 | 42 | 2233-343-400-00 | 43 | 1 | 2233-509-240-00 | 60 | 6 |
| | 35 | 46 | 2233-360-001-00 | 44 | 18 | 2233-509-250-40 | 60 | 2 |
| | 36 | 42 | 2233-360-002-00 | 44 | 21 | | 61 | 2 |
| 2233-330-053-00 | 33 | 31 | 2233-360-004-00 | 44 | 1 | 2233-509-250-50 | 60 | 2-A |
| | 35 | 31-A | 2233-360-005-00 | 44 | 2 | | 61 | 2-A |
| 2233-330-071-00 | 92 | 15 | 2233-360-006-00 | 44 | 28 | 2233-509-320-20 | 60 | 14 |
| 2233-330-072-00 | 92 | 16 | 2233-360-007-00 | 44 | 33 | | 61 | 14 |
| 2233-330-200-10 | 33 | 50 | 2233-360-008-00 | 44 | 27 | 2233-509-330-20 | 60 | 15 |
| | 34 | 46 | 2233-360-009-00 | 44 | 7 | | 61 | 15 |
| | 35 | 50 | 2233-360-015-00 | 44 | 19 | 2233-509-360-00 | 61 | 5 |
| | 36 | 46 | | 44 | 30 | 2233-509-380-00 | 61 | 6 |
| 2233-330-230-10 | 35 | 53 | 2233-360-016-00 | 44 | 16 | 2233-510-008-00 | 62 | 7 |
| | 36 | 49 | 2233-360-200-00 | 44 | 23 | 2233-510-200-00 | 62 | 5 |
| 2233-330-230-20 | 33 | 53 | 2233-360-300-00 | 38 | 6 | 2233-512-001-00 | 63 | 1 |
| | 34 | 49 | 2233-360-510-00 | 44 | 26 | 2233-512-002-00 | 63 | 14 |
| | 35 | 53-A | 2233-360-550-20 | 44 | 11 | 2233-512-004-00 | 63 | 11 |
| | 36 | 49-A | 2233-360-551-00 | 44 | 12 | 2233-512-005-00 | 63 | 7 |
| 2233-330-730-10 | 92 | 11 | 2233-360-553-00 | 44 | 13 | 2233-513-200-00 | 64 | 1 |
| 2233-330-740-00 | 92 | 12 | 2233-407-200-20 | 46 | 1 | | 67 | 1 |
| 2233-331-001-00 | 37 | 16 | 2233-407-200-30 | 46 | 1-A | | 68 | 1 |
| | 38 | 17 | 2233-409-003-10 | 47 | 24 | 2233-513-250-00 | 64 | 33 |
| 2233-331-200-40 | 37 | 13 | 2233-409-009-00 | 47 | 26 | 2233-513-300-10 | 67 | 33 |
| 2233-336-002-10 | 39 | 9 | 2233-409-012-00 | 47 | 18 | 2233-513-320-10 | 67 | 66 |

| Part Code | Fig. | Key | Part Code | Fig. | Key | Part Code | Fig. | Key |
|---|---|---|---|---|---|---|---|---|
| 2233-513-350-00 | 68 | 65 | 2233-537-570-40 | 83 | 1-A | 2233-556-041-00 | 91 | 26-A |
| 2233-513-370-10 | 68 | 32 | 2233-537-570-50 | 83 | 1-B | 2233-581-001-00 | 35 | 62 |
| 2233-513-380-20 | 68 | 33 | 2233-537-570-60 | 83 | 1-C | | 36 | 58 |
| 2233-513-420-00 | 68 | 74 | 2233-537-590-00 | 83 | 12 | 2233-581-001-10 | 35 | 62-A |
| 2233-514-200-20 | 69 | 1 | 2233-537-590-20 | 83 | 12-A | | 36 | 58-A |
| | 71 | 1 | 2233-538-220-10 | 67 | 54 | 2233-581-001-20 | 35 | 62-B |
| 2233-514-230-10 | 70 | 1 | | 68 | 53 | | 36 | 58-B |
| 2233-514-300-20 | 69 | 5 | 2233-539-200-00 | 84 | 1 | 2233-581-002-00 | 93 | 14 |
| 2233-514-330-10 | 70 | 5 | 2233-541-001-00 | 85 | 5 | 2233-581-005-10 | 92 | 29 |
| 2233-514-610-30 | 71 | 5 | 2233-541-200-00 | 85 | 1 | 2233-581-006-00 | 90 | 25 |
| 2233-515-011-00 | 72 | 5 | 2233-545-300-20 | 86 | 1 | | 92 | 28 |
| 2233-515-012-00 | 72 | 6 | 2233-545-300-40 | 86 | 1-A | 2233-581-200-00 | 93 | 11 |
| 2233-515-220-00 | 72 | 1 | 2233-545-300-50 | 86 | 1-B | 2233-581-200-10 | 93 | 11-A |
| 2233-520-001-00 | 74 | 13 | 2233-545-300-60 | 86 | 1-C | 2233-581-210-00 | 93 | 12 |
| | 75 | 13 | 2233-545-310-00 | 87 | 1 | 2233-581-250-00 | 92 | 1 |
| 2233-520-220-00 | 74 | 5 | 2233-546-200-20 | 88 | 1 | 2233-582-004-10 | 94 | 12 |
| | 75 | 5 | 2233-546-300-00 | 88 | 1-A | 2233-582-007-00 | 94 | 9 |
| 2233-520-300-00 | 75 | 1 | 2233-547-001-00 | 90 | 1 | 2233-582-008-00 | 94 | 10 |
| 2233-520-300-10 | 75 | 1-A | 2233-547-200-10 | 90 | 2 | 2233-582-300-20 | 94 | 7 |
| 2233-520-310-00 | 75 | 2 | 2233-548-001-00 | 89 | 1 | 2233-583-014-10 | 95 | 28 |
| 2233-520-310-10 | 75 | 2-A | 2233-548-016-00 | 89 | 28 | 2233-583-017-10 | 95 | 39 |
| 2233-520-330-00 | 74 | 1 | 2233-548-018-00 | 89 | 10 | 2233-583-018-10 | 95 | 40 |
| 2233-520-330-10 | 74 | 1-A | 2233-548-200-00 | 89 | 22 | 2233-583-019-00 | 149 | 22 |
| 2233-520-330-20 | 74 | 1-B | 2233-548-201-00 | 89 | 23 | 2233-583-020-00 | 149 | 20 |
| 2233-520-340-00 | 74 | 2 | 2233-548-202-00 | 89 | 24 | 2233-583-021-00 | 149 | 21 |
| 2233-520-340-10 | 74 | 2-A | 2233-548-203-00 | 89 | 25 | 2233-583-240-00 | 95 | 16 |
| 2233-524-200-00 | 76 | 1 | 2233-548-220-10 | 89 | 4 | 2233-583-240-10 | 95 | 16-A |
| 2233-528-003-00 | 77 | 1 | 2233-548-280-00 | 89 | 16 | 2233-601-200-00 | 97 | 1 |
| 2233-528-003-10 | 77 | 1-A | 2233-548-290-00 | 89 | 6 | 2233-601-210-30 | 97 | 3 |
| 2233-535-250-00 | 79 | 51 | 2233-548-420-00 | 89 | 18 | 2233-601-310-00 | 97 | 9 |
| 2233-536-004-00 | 79 | 22 | 2233-548-430-00 | 89 | 19 | 2233-603-004-00 | 98 | 1 |
| | 80 | 21 | 2233-549-003-00 | 90 | 48 | 2233-603-220-00 | 98 | 2 |
| | 81 | 22 | 2233-549-004-20 | 90 | 39 | 2233-603-220-20 | 98 | 2-A |
| 2233-536-005-00 | 79 | 28 | 2233-549-005-00 | 90 | 11 | 2233-608-001-00 | 101 | 1 |
| 2233-536-006-00 | 79 | 29 | 2233-549-006-10 | 90 | 54 | 2233-612-200-10 | 102 | 1 |
| 2233-536-007-00 | 79 | 33 | 2233-549-200-30 | 90 | 15 | 2233-614-200-00 | 103 | 1 |
| 2233-537-520-10 | 82 | 1 | 2233-549-320-00 | 90 | 27 | 2233-614-210-10 | 103 | 5 |
| 2233-537-520-50 | 82 | 1-A | 2233-549-321-00 | 90 | 28 | 2233-618-001-00 | 106 | 11 |
| 2233-537-520-60 | 82 | 1-B | 2233-549-410-00 | 90 | 46 | 2233-618-002-00 | 106 | 9 |
| 2233-537-520-70 | 82 | 1-C | 2233-549-450-00 | 90 | 44 | 2233-648-001-00 | 108 | 26 |
| 2233-537-521-10 | 82 | 7 | 2233-549-560-00 | 90 | 12 | | 108 | 39 |
| | 83 | 7 | 2233-556-005-00 | 91 | 25 | | 108 | 49 |
| 2233-537-540-00 | 82 | 12 | 2233-556-006-00 | 91 | 26 | 2233-648-006-10 | 108 | 40 |
| 2233-537-540-10 | 82 | 12-A | 2233-556-007-00 | 91 | 27 | 2233-648-012-00 | 108 | 24 |
| 2233-537-570-10 | 83 | 1 | 2233-556-008-00 | 91 | 28 | 2233-648-210-00 | 108 | 59 |

# Numerical Index




| Part Code | Fig. | Key | Part Code | Fig. | Key | Part Code | Fig. | Key |
|---|---|---|---|---|---|---|---|---|
| 2233-648-220-00 | 108 | 57 | 2233-688-007-00 | 160 | 5 | 2233-705-290-00 | 119 | 7 |
| 2233-648-320-00 | 108 | 1 | 2233-688-008-00 | 157 | 25 | 2233-705-290-10 | 119 | 7-A |
| 2233-648-330-00 | 108 | 38 | 2233-688-008-10 | 157 | 25-A | 2233-705-300-00 | 119 | 1 |
| 2233-648-350-00 | 108 | 45 | | 159 | 25 | 2233-705-310-00 | 119 | 2 |
| 2233-651-210-10 | 109 | 1 | 2233-688-009-00 | 157 | 15 | 2233-705-600-00 | 119 | 15 |
| 2233-651-220-00 | 109 | 2 | | 158 | 13 | 2233-706-200-00 | 120 | 1 |
| 2233-651-230-00 | 109 | 4 | | 159 | 15 | 2233-710-002-00 | 104 | 7 |
| 2233-651-300-00 | 110 | 7 | | 160 | 13 | | 121 | 5 |
| 2233-652-200-00 | 110 | 2 | 2233-688-016-10 | 157 | 22 | | 121 | 13 |
| 2233-658-001-00 | 111 | 28 | | 158 | 20 | 2233-710-200-20 | 121 | 2 |
| 2233-658-002-00 | 111 | 27-A | 2233-688-016-20 | 157 | 22-A | | 121 | 10 |
| 2233-658-003-00 | 111 | 29 | | 158 | 20-A | 2233-711-200-00 | 122 | 1 |
| 2233-658-005-00 | 111 | 1 | | 159 | 22 | 2233-711-210-00 | 122 | 2 |
| 2233-658-009-00 | 111 | 22-A | | 160 | 20 | 2233-713-200-10 | 123 | 1 |
| 2233-658-260-00 | 111 | 20-A | 2233-688-017-00 | 157 | 21 | 2233-713-210-10 | 123 | 2 |
| 2233-658-400-00 | 111 | 36 | | 158 | 19 | 2233-713-260-00 | 123 | 1-A |
| 2233-668-001-10 | 112 | 38 | 2233-688-019-00 | 158 | 23 | 2233-713-270-00 | 123 | 2-A |
| 2233-668-002-10 | 112 | 39 | | 160 | 23 | 2233-715-200-10 | 149 | 2 |
| 2233-668-003-00 | 112 | 2 | 2233-688-200-10 | 114 | 3 | 2233-715-210-10 | 149 | 3 |
| 2233-668-004-00 | 112 | 3 | 2233-688-210-10 | 114 | 4 | 2233-715-220-00 | 149 | 12 |
| 2233-668-005-00 | 112 | 4 | 2233-688-220-10 | 114 | 5 | 2233-715-500-00 | 149 | 1 |
| 2233-668-008-00 | 112 | 5 | 2233-688-250-60 | 114 | 1 | 2233-801-210-00 | 126 | 5 |
| 2233-668-250-10 | 112 | 1 | 2233-688-260-20 | 157 | 3 | 2233-801-220-00 | 126 | 32 |
| 2233-668-600-00 | 112 | 42 | | 158 | 3 | 2233-801-300-00 | 126 | 1 |
| 2233-678-001-00 | 115 | 18 | 2233-688-260-30 | 158 | 3-A | 2233-801-301-00 | 126 | 4 |
| 2233-678-003-00 | 113 | 76 | | 160 | 3 | 2233-801-350-00 | 126 | 15 |
| 2233-678-004-00 | 113 | 101 | 2233-688-270-60 | 114 | 2 | 2233-803-007-10 | 129 | 42 |
| 2233-678-200-00 | 113 | 100 | 2233-688-280-10 | 157 | 3-A | 2233-803-021-10 | 129 | 7 |
| 2233-678-200-10 | 113 | 100-A | | 159 | 3 | 2233-803-023-00 | 129 | 6 |
| 2233-678-220-00 | 108 | 52 | 2233-688-300-00 | 109 | 23 | 2233-803-023-10 | 129 | 6-A |
| 2233-678-510-00 | 113 | 96 | 2233-688-310-00 | 114 | 1-A | 2233-803-400-00 | 129 | 1 |
| 2233-678-520-00 | 113 | 97 | 2233-688-320-00 | 114 | 2-A | 2233-804-002-00 | 130 | 25 |
| 2233-678-530-00 | 113 | 98 | 2233-692-001-00 | 115 | 11 | 2233-805-001-00 | 131 | 11 |
| 2233-678-540-00 | 113 | 99 | 2233-692-220-00 | 112 | 20 | 2233-805-002-00 | 131 | 13 |
| 2233-688-001-10 | 158 | 2 | 2233-692-230-00 | 112 | 21 | 2233-805-003-00 | 131 | 53 |
| | 160 | 2 | 2233-698-001-00 | 115 | 34 | 2233-805-008-00 | 131 | 18 |
| 2233-688-002-10 | 157 | 2 | 2233-698-200-00 | 111 | 48 | 2233-805-051-00 | 131 | 64 |
| | 159 | 2 | 2233-701-002-20 | 116 | 1 | 2233-805-052-00 | 131 | 65 |
| 2233-688-005-10 | 157 | 1 | 2233-701-003-00 | 116 | 44 | 2233-805-056-00 | 131 | 67 |
| | 159 | 1 | 2233-701-210-00 | 116 | 37 | 2233-805-200-00 | 131 | 1 |
| 2233-688-006-10 | 158 | 1 | 2233-701-220-00 | 116 | 38 | 2233-901-073-00 | 136 | 1 |
| | 160 | 1 | 2233-702-001-10 | 117 | 5 | 2233-912-001-00 | 137 | 7 |
| 2233-688-007-00 | 157 | 5 | 2233-705-220-10 | 119 | 12 | | 138 | 7 |
| | 158 | 5 | 2233-705-280-00 | 119 | 6 | 2233-912-002-00 | 137 | 3 |
| | 159 | 5 | 2233-705-280-10 | 119 | 6-A | | 138 | 3 |

| Part Code | Fig. | Key |
|---|---|---|
| 2233-912-041-00 | 79 | 8 |
| | 80 | 8 |
| | 81 | 8 |
| 2233-912-042-00 | 79 | 10 |
| | 80 | 10 |
| | 81 | 10 |
| 2233-912-082-00 | 139 | 1 |
| 2233-912-087-00 | 139 | 2 |
| 2233-912-088-00 | 139 | 3 |
| 2233-912-089-00 | 139 | 4 |
| 2233-912-091-00 | 139 | 5 |
| 2233-912-093-00 | 79 | 52 |
| 2233-926-006-10 | 141 | 5-A |
| | 142 | 5 |
| 2233-926-007-00 | 141 | 10-A |
| | 142 | 10 |
| 2233-938-001-00 | 151 | 1 |
| 2240-331-500-10 | 38 | 13 |
| 2241-301-006-00 | 37 | 12-A |
| | 38 | 12 |
| 2505-111-003-00 | 82 | 27 |
| | 83 | 27 |
| 2512-665-220-00 | 79 | 15 |
| | 80 | 14 |
| | 81 | 15 |
| 2513-801-042-00 | 109 | 9 |
| 2515-665-210-00 | 79 | 39 |
| | 80 | 38 |
| | 81 | 39 |
| 2703-501-006-00 | 154 | 10 |
| | 155 | 10 |
| 2703-501-008-00 | 154 | 12 |
| | 155 | 12 |
| 2798-102-002-00 | 70 | 14 |
| | 71 | 14 |
| 3103-210-051-00 | 7 | 2 |
| 3505-704-003-00 | 73 | 7 |
| | 104 | 8 |
| | 121 | 6 |
| | 121 | 14 |
| 3511-203-005-00 | 9 | 30 |
| 3533-306-001-00 | 79 | 4 |
| | 80 | 4 |
| | 81 | 4 |
| | 129 | 14 |
| 3533-901-012-00 | 55 | 3 |
| | 56 | 3 |
| 3555-404-008-00 | 100 | 22 |
| 3560-201-015-00 | 129 | 10 |
| 3560-203-002-00 | 9 | 36 |
| 3560-203-004-00 | 40 | 7 |
| | 129 | 15 |
| 3560-503-302-00 | 1 | 18 |
| | 33 | 47 |
| | 34 | 43 |
| | 35 | 47 |
| | 36 | 43 |
| | 39 | 24 |
| | 40 | 8 |
| | 82 | 34 |
| | 83 | 34 |
| | 116 | 40 |
| | 122 | 5 |
| | 131 | 52 |
| 3565-403-008-00 | 100 | 21 |
| 3612-631-001-00 | 90 | 19 |
| | 90 | 49 |
| 3623-150-003-10 | 1 | 6 |
| 3623-263-001-00 | 82 | 21 |
| | 83 | 21 |
| 3631-350-201-10 | 47 | 13-A |
| 3632-360-036-00 | 118 | 10 |
| 3640-260-200-30 | 2 | 12 |
| | 85 | 6 |
| | 118 | 2 |
| 3640-547-007-00 | 116 | 2 |
| 3646-102-011-10 | 113 | 78 |
| 3650-201-006-00 | 47 | 31 |
| 3650-212-001-00 | 6 | 16 |
| 3650-375-200-00 | 47 | 21 |
| 3652-273-002-00 | 79 | 18 |
| | 80 | 17 |
| | 81 | 18 |
| 3656-221-001-10 | 39 | 8 |
| | 40 | 4 |
| 3656-260-200-30 | 85 | 4 |
| 3656-302-009-10 | 1 | 7 |
| 3659-215-003-00 | 67 | 68 |
| | 68 | 67 |
| 3659-301-001-00 | 1 | 12 |
| 3659-836-002-00 | 88 | 8 |
| | 90 | 32 |
| 3676-352-001-00 | 146 | 7 |
| 3676-352-002-00 | 11 | 20 |
| 3676-374-310-00 | 47 | 20 |
| 3737-154-003-00 | 63 | 13 |
| 3737-172-011-00 | 98 | 4 |
| 3737-211-007-00 | 116 | 24 |
| | 148 | 18 |
| 3737-314-003-00 | 4 | 9 |
| 3740-314-017-00 | 32 | 6 |
| | 116 | 56 |
| 3747-155-013-10 | 6 | 15 |
| 3747-342-002-00 | 52 | 7 |
| | 95 | 9 |
| 3750-231-013-00 | 124 | 25 |
| | 125 | 25 |
| 3768-185-014-10 | 53 | 12 |
| 3768-185-022-10 | 46 | 5 |
| | 53 | 11 |
| | 146 | 6 |
| 3801-109-222-00 | 14 | 8 |
| 3801-109-223-00 | 14 | 9 |
| 3805-301-320-00 | 2 | 26 |
| 3805-301-320-10 | 2 | 26-A |
| 3805-301-321-00 | 2 | 35 |
| 3805-352-002-00 | 47 | 12 |
| 3805-354-280-00 | 45 | 4 |
| 3807-836-350-00 | 6 | 29 |
| | 7 | 12 |
| | 20 | 16 |
| | 90 | 6 |
| | 92 | 23 |
| | 111 | 43 |
| | 133 | 7 |
| 3807-836-400-00 | 6 | 30 |
| | 7 | 13 |
| | 20 | 17 |
| | 90 | 7 |
| | 92 | 24 |
| | 111 | 44 |
| | 133 | 8 |
| 3817-493-005-00 | 91 | 11 |
| 3821-262-202-00 | 82 | 4 |
| | 83 | 4 |

# Numerical Index




| Part Code | Fig. | Key |
|---|---|---|
| 3821-262-202-00 | 90 | 29 |
| 3821-262-204-00 | 82 | 5 |
| | 83 | 5 |
| | 90 | 31 |
| 3824-247-202-00 | 82 | 3 |
| | 83 | 3 |
| | 90 | 30 |
| 3829-260-303-00 | 82 | 14 |
| | 83 | 14 |
| 3829-387-410-00 | 54 | 7-A |
| 3829-905-001-00 | 134 | 9 |
| | 135 | 9 |
| 3829-905-052-00 | 141 | 8 |
| | 142 | 8 |
| 3830-311-210-00 | 5 | 15 |
| 3838-620-002-00 | 20 | 11 |
| 3841-277-300-00 | 82 | 9 |
| | 83 | 9 |
| 3841-277-300-10 | 82 | 9-A |
| | 83 | 9-A |
| 3843-271-210-00 | 80 | 33 |
| 3843-271-210-10 | 79 | 34 |
| | 80 | 33-A |
| | 81 | 34 |
| 3849-270-402-00 | 79 | 20 |
| | 80 | 19 |
| | 81 | 20 |
| | 90 | 41 |
| 3849-270-403-00 | 79 | 21 |
| | 80 | 20 |
| | 81 | 21 |
| 3864-225-001-00 | 6 | 14 |
| 3872-301-301-00 | 2 | 27 |
| 3872-301-302-00 | 2 | 30 |
| 3872-301-303-00 | 2 | 32 |
| 3872-725-006-00 | 44 | 32 |
| 3885-741-235-00 | 58 | 3 |
| | 59 | 3 |
| 3888-218-001-00 | 91 | 4 |
| | 122 | 21 |
| 3888-281-200-00 | 15 | 20 |
| | 110 | 1 |
| 3888-726-001-00 | 9 | 24 |
| | 52 | 5 |
| 3888-726-200-00 | 52 | 4 |
| 3888-726-200-00 | 91 | 3 |
| | 122 | 19 |
| 3908-170-020-00 | 5 | 2 |
| | 10 | 5 |
| | 58 | 15 |
| | 59 | 15 |
| | 70 | 12 |
| | 71 | 12 |
| 3922-420-211-00 | 117 | 2 |
| 3924-312-003-00 | 108 | 25 |
| 4106-102-028-00 | 1 | 20 |
| | 4 | 6 |
| | 52 | 17 |
| 4132-303-004-00 | 47 | 30 |
| 4141-403-283-00 | 74 | 19 |
| | 75 | 19 |
| 4319-501-007-00 | 92 | 17 |
| 4502-205-021-00 | 149 | 8 |
| 4512-106-005-00 | 76 | 4 |
| 6219-755-001-00 | 5 | 16 |
| 6221-408-003-00 | 2 | 37 |
| 6221-408-007-00 | 2 | 36 |
| 6221-408-008-00 | 2 | 28 |
| 6221-408-009-00 | 2 | 29 |
| 6221-408-010-00 | 2 | 34 |
| 6221-408-011-00 | 2 | 31 |
| 6221-408-013-00 | 2 | 33 |
| 7827-205-010-00 | 95 | 27 |
| 7932-201-002-00 | 26 | 22 |
| | 26 | 23 |
| 7954-205-100-00 | 11 | 7-A |
| 7954-205-101-00 | 11 | 7 |
| 7957-405-003-00 | 112 | 34 |
| 8595-201-025-00 | 18 | 25 |
| | 23 | 13 |
| 8664-305-201-00 | 14 | 3 |
| 8836-502-203-00 | 109 | 22 |
| 8836-506-005-00 | 112 | 8 |
| 8836-508-001-00 | 112 | 7 |
| 8836-601-011-00 | 109 | 6 |
| 8836-602-005-10 | 115 | 26 |
| 8836-602-006-10 | 115 | 28 |
| 8836-703-055-00 | 91 | 7 |
| | 108 | 11 |
| | 113 | 83 |
| 8836-706-006-10 | 115 | 5 |
| 8836-730-215-00 | 157 | 11 |
| | 158 | 9 |
| | 159 | 11 |
| | 160 | 9 |
| 8836-730-216-00 | 157 | 20 |
| | 158 | 18 |
| | 159 | 20 |
| | 160 | 18 |
| 8841-536-011-00 | 113 | 31 |
| | 113 | 67 |
| 8841-536-018-00 | 113 | 104 |
| 8841-716-009-00 | 157 | 7 |
| | 157 | 10 |
| | 158 | 7 |
| | 159 | 7 |
| | 159 | 10 |
| | 160 | 7 |
| 8841-716-011-00 | 157 | 19 |
| | 158 | 17 |
| | 159 | 19 |
| | 160 | 17 |
| 8841-725-002-00 | 131 | 28 |
| 8842-505-007-00 | 111 | 3 |
| 8842-505-019-00 | 111 | 11 |
| 8842-505-032-00 | 111 | 10 |
| 8842-505-035-00 | 111 | 8 |
| 8842-515-015-00 | 111 | 18 |
| 8842-515-022-00 | 113 | 82 |
| 8842-535-250-10 | 109 | 11 |
| 8842-605-004-10 | 114 | 9 |
| 8842-625-408-00 | 112 | 28 |
| 8842-625-409-00 | 112 | 27 |
| 8842-705-032-00 | 113 | 30 |
| | 113 | 66 |
| 8842-705-208-00 | 113 | 32 |
| | 113 | 68 |
| 8842-705-211-10 | 113 | 33 |
| | 113 | 69 |
| 8842-705-214-10 | 113 | 10 |
| | 113 | 46 |
| 8842-705-215-00 | 113 | 22 |
| | 113 | 58 |
| 8842-705-216-00 | 113 | 23 |
| | 113 | 59 |

# Numerical Index




| Part Code | Fig. | Key |
|---|---|---|
| 8842-705-218-00 | 113 | 26 |
| | 113 | 62 |
| 8842-705-219-00 | 113 | 27 |
| | 113 | 63 |
| 8842-705-223-00 | 113 | 3 |
| | 113 | 39 |
| 8842-705-224-00 | 113 | 25 |
| | 113 | 61 |
| 8842-905-042-00 | 141 | 7 |
| | 142 | 7 |
| 8842-919-002-10 | 143 | 2 |
| 8843-404-006-00 | 108 | 20 |
| 8843-404-006-10 | 108 | 20-A |
| 8843-404-009-00 | 108 | 19 |
| 8843-514-300-00 | 111 | 19 |
| 8843-534-002-00 | 111 | 16 |
| 8843-624-004-00 | 112 | 35 |
| 8843-704-004-00 | 108 | 48 |
| 8843-704-005-00 | 108 | 54 |
| 8843-704-251-00 | 108 | 53 |
| 8844-405-028-00 | 108 | 21 |
| 8844-535-002-00 | 109 | 7 |
| 8844-629-300-20 | 112 | 24 |
| 8844-629-304-10 | 112 | 30 |
| 8844-629-305-00 | 112 | 31 |
| 8844-629-306-00 | 112 | 32 |
| 8844-629-307-00 | 112 | 26 |
| 8844-629-310-10 | 112 | 25 |
| 8844-726-220-00 | 115 | 1 |
| 8844-727-200-00 | 115 | 2 |
| 8844-745-013-00 | 115 | 24 |
| 8844-746-007-00 | 115 | 33 |
| 8844-746-008-00 | 115 | 23 |
| 8844-906-006-00 | 141 | 14 |
| | 142 | 14 |
| 8845-724-270-00 | 115 | 10 |
| 8849-001-200-00 | 144 | 2 |
| 8849-001-300-00 | 145 | 1 |
| J061-116-025-00 | 47 | 27 |
| J061-120-032-00 | 47 | 6 |
| J061-123-035-00 | 2 | 16 |
| J061-132-050-00 | 101 | 15 |
| J061-145-060-10 | 101 | 16 |
| J061-238-046-00 | 2 | 17 |
| J061-249-060-00 | 2 | 25 |

| Part Code | Fig. | Key |
|---|---|---|
| J062-104-111-00 | 11 | 24 |
| J062-111-120-00 | 5 | 21 |
| J062-119-126-00 | 5 | 19 |
| | 47 | 23 |
| J062-126-134-00 | 5 | 12 |
| K116-005-104-00 | 47 | 8 |
| K116-024-003-00 | 152 | 2 |
| K116-024-004-00 | 152 | 3 |
| K116-024-005-00 | 152 | 4 |
| K116-024-006-20 | 152 | 6 |
| K116-024-007-00 | 152 | 9 |
| K116-024-008-10 | 152 | 10 |
| K116-024-200-00 | 152 | 1 |
| K116-029-000-50 | 106 | 1 |
| K116-029-000-60 | 106 | 1-A |
| K116-029-300-00 | 152 | 12 |
| K116-029-400-00 | 152 | 11 |
| K116-029-400-10 | 152 | 11-A |
| K200-269-000-00 | 53 | 2 |
| K211-035-005-00 | 47 | 10 |
| K233-007-000-10 | 47 | 7 |
| K250-083-000-00 | 53 | 13 |
| K270-012-103-00 | 49 | 4 |
| K275-001-003-00 | 153 | 26 |
| K500-001-023-00 | 153 | 22 |
| K510-001-007-00 | 153 | 5 |
| K510-001-010-00 | 153 | 8 |
| K510-001-011-00 | 153 | 9 |
| K510-001-013-20 | 153 | 11 |
| K510-001-015-00 | 153 | 13 |
| K510-001-016-00 | 153 | 15 |
| K510-001-017-00 | 153 | 16 |
| K510-001-018-00 | 153 | 17 |
| K510-001-019-00 | 153 | 18 |
| K510-001-020-00 | 153 | 19 |
| K510-001-024-00 | 153 | 23 |
| K510-001-026-00 | 153 | 24 |
| K510-001-029-00 | 153 | 25 |
| K510-001-031-00 | 153 | 33 |
| K510-001-034-00 | 153 | 42 |
| K510-001-036-00 | 153 | 40 |
| K510-001-039-00 | 153 | 32 |
| K510-003-021-00 | 153 | 20 |
| K510-003-022-00 | 153 | 21 |
| K510-003-037-00 | 153 | 43 |

| Part Code | Fig. | Key |
|---|---|---|
| K510-006-008-00 | 153 | 6 |
| K510-006-012-30 | 153 | 10 |
| K510-006-014-00 | 153 | 12 |
| K510-010-006-10 | 153 | 4 |
| K510-010-009-00 | 153 | 7 |
| K510-017-047-00 | 153 | 36 |
| K510-017-048-00 | 153 | 37 |
| K510-019-005-10 | 153 | 3 |
| K510-022-000-00 | 8 | 1 |
| K510-022-001-00 | 153 | 1 |
| K510-022-004-00 | 153 | 2 |
| K510-027-001-00 | 153 | 1-A |
| P112-711-201-00 | 46 | 2 |
| | 50 | 2 |
| | 97 | 2 |
| P121-817-007-00 | 89 | 15 |
| V111-163-001-20 | 40 | 20 |
| V111-163-001-60 | 6 | 31 |
| | 7 | 14 |
| | 90 | 8 |
| | 92 | 25 |
| | 111 | 45 |
| | 133 | 9 |
| V111-163-002-00 | 20 | 18 |
| | 100 | 32 |
| V111-164-001-20 | 157 | 40 |
| | 158 | 38 |
| | 159 | 40 |
| | 160 | 38 |
| V111-168-003-50 | 74 | 7 |
| | 75 | 7 |
| V111-703-000-60 | 157 | 30 |
| | 158 | 28 |
| | 159 | 30 |
| | 160 | 28 |
| V111-703-001-20 | 157 | 37 |
| | 158 | 35 |
| | 159 | 37 |
| | 160 | 35 |
| V111-703-001-60 | 109 | 12 |
| V111-704-001-00 | 113 | 5 |
| | 113 | 41 |
| V111-705-001-00 | 108 | 17 |
| | 112 | 13 |
| V111-705-001-20 | 110 | 5 |

# Numerical Index




| Part Code | Fig. | Key | Part Code | Fig. | Key | Part Code | Fig. | Key |
|---|---|---|---|---|---|---|---|---|
| V111-706-001-60 | 114 | 8 | V120-366-002-50 | 125 | 4 | V201-260-805-00 | 39 | 4 |
| V112-168-002-00 | 129 | 12 | V120-366-003-00 | 154 | 5 | V201-260-807-00 | 76 | 2 |
| V112-706-002-00 | 129 | 22 | | 155 | 5 | V201-260-808-00 | 79 | 2 |
| | 129 | 38 | V120-368-002-00 | 107 | 10 | | 80 | 2 |
| V120-264-001-20 | 90 | 36 | V120-376-001-20 | 6 | 3 | | 81 | 2 |
| V120-264-001-60 | 44 | 15 | V180-446-001-20 | 108 | 51 | V201-261-007-50 | 8 | 5 |
| V120-265-001-00 | 129 | 2 | V195-102-504-40 | 126 | 26 | V201-261-014-00 | 8 | 4 |
| V120-265-001-60 | 15 | 21 | V195-163-006-10 | 78 | 8 | V201-360-801-60 | 4 | 7 |
| V120-364-000-80 | 126 | 27 | V195-164-012-10 | 73 | 3 | | 44 | 8 |
| V120-364-001-00 | 6 | 20 | | 90 | 45 | V201-360-803-50 | 23 | 8 |
| | 9 | 6 | V195-164-016-10 | 126 | 72 | V201-360-808-00 | 38 | 14 |
| | 23 | 19 | V200-260-601-00 | 90 | 35 | V201-361-002-50 | 26 | 18 |
| | 40 | 11 | | 90 | 50 | V201-361-003-00 | 60 | 16 |
| | 44 | 35 | V200-260-601-20 | 88 | 9 | | 61 | 16 |
| | 51 | 9 | | 90 | 33 | V201-361-003-50 | 23 | 23 |
| | 52 | 10 | | 131 | 9 | V201-361-004-0B | 33 | 60 |
| | 91 | 24 | | 131 | 49 | | 35 | 59 |
| | 95 | 12 | V200-260-601-60 | 90 | 3 | | 36 | 55 |
| | 99 | 14 | V200-260-602-00 | 6 | 26 | V201-361-202-50 | 27 | 2 |
| | 106 | 8 | | 67 | 70 | V201-700-801-20 | 108 | 3 |
| | 122 | 24 | | 68 | 69 | V203-461-002-20 | 1 | 3 |
| | 147 | 24 | V200-260-602-50 | 6 | 27 | V203-461-002-50 | 3 | 6 |
| V120-364-001-20 | 126 | 28 | | 126 | 37 | | 4 | 2 |
| V120-365-001-60 | 64 | 21 | V200-260-603-50 | 131 | 14 | V210-260-601-20 | 64 | 18 |
| | 64 | 53 | | 131 | 47 | | 64 | 49 |
| | 67 | 21 | | 131 | 77 | | 65 | 13 |
| | 67 | 53 | V200-260-604-00 | 82 | 31 | | 67 | 18 |
| | 68 | 20 | | 83 | 31 | | 67 | 49 |
| | 68 | 52 | | 131 | 48 | | 68 | 17 |
| | 89 | 26 | | 131 | 78 | | 68 | 48 |
| | 95 | 5 | V200-700-601-20 | 1 | 16 | | 116 | 39 |
| V120-365-002-50 | 79 | 46 | V200-700-601-60 | 115 | 29 | | 131 | 16 |
| | 80 | 45 | | 121 | 20 | | 131 | 42 |
| | 81 | 46 | V200-700-603-00 | 154 | 23 | V210-260-601-60 | 33 | 48 |
| V120-366-001-60 | 57 | 2 | | 155 | 23 | | 34 | 44 |
| | 64 | 15 | V200-700-803-00 | 115 | 22 | | 35 | 48 |
| | 64 | 47 | V201-260-802-50 | 41 | 2 | | 36 | 44 |
| | 67 | 15 | | 146 | 9 | | 47 | 17 |
| | 67 | 47 | V201-260-803-00 | 74 | 16 | | 93 | 13 |
| | 68 | 14 | | 75 | 16 | | 126 | 30 |
| | 68 | 46 | V201-260-803-50 | 95 | 36 | | 126 | 40 |
| | 79 | 31 | V201-260-804-00 | 77 | 4 | | 126 | 43 |
| | 80 | 30 | | 129 | 8 | V210-260-602-00 | 129 | 20 |
| | 81 | 31 | V201-260-804-50 | 149 | 10 | V210-260-603-00 | 130 | 20 |
| V120-366-002-50 | 124 | 4 | V201-260-805-00 | 9 | 2 | V210-260-603-50 | 47 | 15 |

# Numerical Index




| Part Code | Fig. | Key |
|---|---|---|
| V210-360-601-20 | 2 | 38 |
| | 95 | 41 |
| | 107 | 4 |
| | 126 | 68 |
| V210-360-601-60 | 9 | 21-A |
| | 10 | 12 |
| | 37 | 17 |
| | 38 | 18 |
| | 56 | 8 |
| | 79 | 43 |
| | 80 | 42 |
| | 80 | 48 |
| | 81 | 43 |
| | 100 | 56 |
| | 130 | 35 |
| V210-360-602-00 | 9 | 8 |
| | 82 | 18 |
| | 82 | 26 |
| | 83 | 18 |
| | 83 | 26 |
| | 90 | 13 |
| | 90 | 16 |
| | 90 | 23 |
| | 126 | 61 |
| | 126 | 63 |
| | 126 | 67 |
| | 130 | 16 |
| | 130 | 22 |
| | 130 | 30 |
| | 131 | 17 |
| | 131 | 51 |
| V210-360-602-50 | 90 | 14 |
| | 126 | 36 |
| | 130 | 37 |
| V210-360-603-00 | 86 | 2 |
| | 87 | 2 |
| | 100 | 54 |
| | 130 | 9 |
| | 130 | 18 |
| | 130 | 24 |
| | 130 | 40 |
| | 130 | 43 |
| V210-360-604-00 | 87 | 3 |
| V210-560-601-20 | 96 | 4 |
| V210-560-603-00 | 152 | 16 |

| Part Code | Fig. | Key |
|---|---|---|
| V211-260-801-60 | 23 | 21 |
| | 37 | 14 |
| | 116 | 36 |
| | 149 | 19 |
| V211-260-802-00 | 1 | 19 |
| | 2 | 11 |
| | 2 | 45 |
| | 37 | 4 |
| | 38 | 4 |
| | 46 | 4 |
| | 47 | 3 |
| | 50 | 4 |
| | 51 | 3 |
| V211-260-802-50 | 3 | 2 |
| | 8 | 18 |
| | 33 | 27 |
| | 34 | 28 |
| | 35 | 27 |
| | 36 | 28 |
| | 53 | 18 |
| | 100 | 3 |
| | 129 | 31 |
| V211-260-803-00 | 8 | 14 |
| V211-260-805-50 | 15 | 18 |
| | 53 | 8 |
| V211-360-801-60 | 89 | 17 |
| | 90 | 40 |
| | 91 | 21 |
| | 91 | 35 |
| V211-360-802-00 | 6 | 9 |
| | 6 | 13 |
| | 6 | 25 |
| | 7 | 7 |
| | 20 | 14 |
| | 22 | 6 |
| | 31 | 12 |
| | 33 | 67 |
| | 35 | 70 |
| | 39 | 13 |
| | 39 | 29 |
| | 40 | 2 |
| | 42 | 2 |
| | 43 | 2 |
| | 52 | 3 |
| | 60 | 7 |

| Part Code | Fig. | Key |
|---|---|---|
| V211-360-802-00 | 61 | 7 |
| | 62 | 6 |
| | 62 | 8 |
| | 63 | 3 |
| | 63 | 6 |
| | 63 | 15 |
| | 66 | 12 |
| | 74 | 3 |
| | 74 | 14 |
| | 75 | 3 |
| | 75 | 14 |
| | 89 | 3 |
| | 89 | 5 |
| | 89 | 20 |
| | 94 | 8 |
| | 95 | 3 |
| | 95 | 29 |
| | 95 | 32 |
| | 100 | 58 |
| | 103 | 3 |
| | 104 | 3 |
| | 104 | 6 |
| | 112 | 11 |
| | 116 | 48 |
| | 119 | 8 |
| | 119 | 16 |
| | 119 | 22 |
| | 119 | 23 |
| | 120 | 3 |
| | 120 | 6 |
| | 121 | 3 |
| | 121 | 11 |
| | 121 | 18 |
| | 122 | 13 |
| | 127 | 8 |
| | 129 | 27 |
| | 129 | 29 |
| | 149 | 15 |
| V211-360-802-50 | 60 | 3 |
| | 61 | 3 |
| | 65 | 21 |
| | 103 | 7 |
| | 119 | 9 |
| | 126 | 22 |
| | 126 | 53 |

# Numerical Index




| Part Code | Fig. | Key |
|---|---|---|
| V211-360-802-50 | 146 | 11 |
| | 149 | 4 |
| V211-360-803-00 | 149 | 7 |
| V211-360-804-50 | 91 | 2 |
| V211-361-002-00 | 68 | 34 |
| | 119 | 13 |
| V211-361-002-50 | 60 | 18 |
| | 61 | 18 |
| | 64 | 2 |
| | 64 | 34 |
| | 67 | 2 |
| | 67 | 34 |
| V211-560-802-00 | 26 | 33 |
| V211-560-802-50 | 16 | 8 |
| | 92 | 7 |
| | 93 | 7 |
| | 108 | 69 |
| V211-560-803-00 | 11 | 3 |
| | 26 | 45 |
| | 44 | 3 |
| | 69 | 2 |
| | 69 | 6 |
| | 70 | 2 |
| | 70 | 6 |
| | 71 | 2 |
| | 71 | 6 |
| | 72 | 2 |
| V211-560-803-50 | 11 | 16 |
| | 69 | 3 |
| | 69 | 7 |
| | 70 | 3 |
| | 70 | 7 |
| | 71 | 3 |
| | 71 | 7 |
| | 72 | 3 |
| V211-560-804-50 | 33 | 5 |
| | 34 | 5 |
| | 35 | 5 |
| | 36 | 5 |
| V220-540-802-50 | 53 | 19 |
| V220-541-003-50 | 153 | 41 |
| V251-260-802-50 | 129 | 13 |
| V251-341-202-50 | 27 | 4 |
| V301-260-004-00 | 44 | 20 |
| | 44 | 31 |
| V301-260-004-00 | 90 | 38 |
| V301-260-006-00 | 6 | 28 |
| | 37 | 18 |
| | 38 | 19 |
| | 39 | 25 |
| | 65 | 14 |
| | 82 | 32 |
| | 83 | 32 |
| | 90 | 4 |
| | 92 | 19 |
| | 130 | 15 |
| V301-700-003-00 | 109 | 15 |
| | 112 | 10 |
| | 112 | 29 |
| | 157 | 34 |
| | 157 | 36 |
| | 158 | 32 |
| | 158 | 34 |
| | 159 | 34 |
| | 159 | 36 |
| | 160 | 32 |
| | 160 | 34 |
| V301-700-004-00 | 157 | 18 |
| | 157 | 43 |
| | 158 | 16 |
| | 158 | 41 |
| | 159 | 18 |
| | 159 | 43 |
| | 160 | 16 |
| | 160 | 41 |
| V301-700-006-00 | 108 | 50 |
| | 110 | 9 |
| | 112 | 41 |
| | 113 | 74 |
| | 115 | 32 |
| | 154 | 24 |
| | 155 | 24 |
| V302-260-006-00 | 40 | 9 |
| V304-260-008-00 | 4 | 13 |
| | 6 | 7 |
| | 7 | 5 |
| | 7 | 19 |
| | 7 | 22 |
| | 9 | 13 |
| | 9 | 16 |
| V304-260-008-00 | 25 | 2 |
| | 40 | 30 |
| | 41 | 3 |
| | 52 | 18 |
| | 69 | 4 |
| | 69 | 8 |
| | 70 | 4 |
| | 70 | 8 |
| | 71 | 4 |
| | 71 | 8 |
| | 72 | 4 |
| | 74 | 18 |
| | 75 | 18 |
| | 76 | 3 |
| | 89 | 2 |
| | 95 | 37 |
| | 99 | 21 |
| | 108 | 67 |
| | 113 | 102 |
| | 117 | 3 |
| | 127 | 4 |
| | 146 | 10 |
| | 147 | 18 |
| | 149 | 11 |
| V304-260-010-00 | 66 | 10 |
| | 101 | 20 |
| | 126 | 56 |
| V304-260-012-00 | 1 | 8 |
| | 22 | 4 |
| V304-260-014-00 | 6 | 18 |
| | 48 | 4 |
| V304-460-008-00 | 23 | 7 |
| | 116 | 45 |
| | 124 | 29 |
| | 125 | 29 |
| | 129 | 17 |
| V304-460-010-00 | 23 | 24 |
| V304-460-012-00 | 27 | 5 |
| V304-700-008-00 | 1 | 13 |
| | 108 | 35 |
| | 108 | 42 |
| | 124 | 24 |
| | 125 | 24 |
| V334-260-010-00 | 8 | 13 |
| V335-260-008-00 | 109 | 21 |

# Numerical Index




| Part Code | Fig. | Key |
|---|---|---|
| V335-260-010-00 | 24 | 2 |
| V350-160-004-00 | 84 | 3 |
| V350-160-005-00 | 78 | 4 |
| V360-260-004-00 | 5 | 4 |
| V360-260-005-00 | 79 | 47 |
| | 80 | 46 |
| | 81 | 47 |
| | 82 | 28 |
| | 83 | 28 |
| V360-260-006-00 | 5 | 14 |
| | 6 | 22 |
| | 9 | 10 |
| | 9 | 22 |
| | 47 | 16 |
| | 51 | 11 |
| | 64 | 16 |
| | 64 | 51 |
| | 67 | 16 |
| | 67 | 51 |
| | 67 | 71 |
| | 68 | 15 |
| | 68 | 50 |
| | 68 | 70 |
| | 79 | 41 |
| | 79 | 44 |
| | 80 | 40 |
| | 80 | 43 |
| | 80 | 49 |
| | 81 | 41 |
| | 81 | 44 |
| | 82 | 20 |
| | 83 | 20 |
| | 88 | 2 |
| | 88 | 5 |
| | 90 | 17 |
| | 90 | 18 |
| | 90 | 20 |
| | 90 | 47 |
| | 99 | 16 |
| | 106 | 10 |
| | 126 | 31 |
| | 126 | 41 |
| | 129 | 34 |
| | 130 | 12 |
| | 131 | 10 |

| Part Code | Fig. | Key |
|---|---|---|
| V360-260-006-00 | 131 | 15 |
| | 131 | 50 |
| | 131 | 79 |
| | 133 | 12 |
| | 147 | 26 |
| V361-260-006-00 | 63 | 12 |
| V362-260-008-00 | 5 | 17 |
| | 6 | 10 |
| | 8 | 22 |
| | 9 | 4 |
| | 10 | 10 |
| | 37 | 15 |
| | 38 | 16 |
| | 39 | 6 |
| | 60 | 4 |
| | 60 | 8 |
| | 61 | 4 |
| | 61 | 8 |
| | 62 | 9 |
| | 63 | 4 |
| | 73 | 5 |
| | 73 | 9 |
| | 74 | 4 |
| | 74 | 8 |
| | 74 | 15 |
| | 75 | 4 |
| | 75 | 8 |
| | 75 | 15 |
| | 85 | 3 |
| | 89 | 21 |
| | 95 | 30 |
| | 99 | 24 |
| | 116 | 57 |
| | 119 | 10 |
| | 119 | 17 |
| | 119 | 20 |
| | 119 | 24 |
| | 120 | 7 |
| | 121 | 4 |
| | 121 | 12 |
| | 122 | 28 |
| | 129 | 32 |
| | 146 | 12 |
| | 147 | 21 |
| | 149 | 5 |

| Part Code | Fig. | Key |
|---|---|---|
| V363-260-008-00 | 66 | 13 |
| V363-260-010-00 | 35 | 63 |
| | 36 | 59 |
| | 60 | 17 |
| | 61 | 17 |
| | 64 | 3 |
| | 64 | 35 |
| | 67 | 3 |
| | 67 | 35 |
| | 112 | 6 |
| V401-160-003-00 | 6 | 32 |
| | 7 | 15 |
| | 20 | 19 |
| | 40 | 19 |
| | 90 | 10 |
| | 92 | 26 |
| | 111 | 46 |
| | 133 | 11 |
| V401-160-004-00 | 44 | 17 |
| | 90 | 37 |
| V401-160-006-00 | 90 | 5 |
| | 130 | 33 |
| | 131 | 55 |
| V401-160-008-00 | 4 | 8 |
| | 7 | 23 |
| | 8 | 16 |
| | 9 | 17 |
| | 11 | 5 |
| | 11 | 18 |
| | 16 | 5 |
| | 25 | 3 |
| | 38 | 15 |
| | 44 | 9 |
| | 53 | 20 |
| | 89 | 8 |
| | 108 | 66 |
| | 109 | 20 |
| | 124 | 28 |
| | 125 | 28 |
| | 127 | 3 |
| V401-160-010-00 | 1 | 4 |
| | 3 | 7 |
| | 4 | 3 |
| | 8 | 6 |
| | 8 | 12 |

# Numerical Index




| Part Code | Fig. | Key |
|---|---|---|
| V401-160-010-00 | 24 | 4 |
| | 26 | 19 |
| | 33 | 61 |
| | 35 | 61 |
| | 36 | 57 |
| | 60 | 19 |
| | 61 | 19 |
| | 97 | 7 |
| | 101 | 19 |
| | 126 | 57 |
| V401-160-012-00 | 1 | 9 |
| | 27 | 3 |
| | 54 | 6 |
| V401-700-003-00 | 109 | 14 |
| | 112 | 9 |
| | 157 | 31 |
| | 157 | 33 |
| | 158 | 29 |
| | 158 | 31 |
| | 159 | 31 |
| | 159 | 33 |
| | 160 | 29 |
| | 160 | 31 |
| V401-700-004-00 | 108 | 22 |
| | 113 | 6 |
| | 113 | 29 |
| | 113 | 42 |
| | 113 | 65 |
| | 157 | 17 |
| | 157 | 42 |
| | 158 | 15 |
| | 158 | 40 |
| | 159 | 17 |
| | 159 | 42 |
| | 160 | 15 |
| | 160 | 40 |
| V401-700-005-00 | 108 | 18 |
| | 109 | 10 |
| | 110 | 6 |
| | 112 | 14 |
| V401-700-006-00 | 1 | 17 |
| | 114 | 7 |
| | 115 | 31 |
| V401-700-008-00 | 1 | 14 |
| | 108 | 4 |
| V401-700-008-00 | 108 | 34 |
| | 108 | 41 |
| | 124 | 23 |
| | 125 | 23 |
| V402-160-012-00 | 33 | 58 |
| | 34 | 54 |
| | 35 | 58 |
| | 36 | 54 |
| V410-260-010-00 | 101 | 18 |
| | 126 | 58 |
| V411-260-003-00 | 6 | 33 |
| | 7 | 16 |
| | 20 | 20 |
| | 40 | 18 |
| | 90 | 9 |
| | 92 | 27 |
| | 111 | 47 |
| | 133 | 10 |
| V411-260-004-00 | 20 | 7 |
| | 40 | 12 |
| | 55 | 7 |
| | 56 | 6 |
| | 126 | 13 |
| | 126 | 19 |
| | 126 | 35 |
| V411-260-006-00 | 31 | 14 |
| | 33 | 70 |
| | 35 | 67 |
| | 50 | 6 |
| | 82 | 33 |
| | 83 | 33 |
| | 91 | 33 |
| | 92 | 10 |
| | 92 | 21 |
| | 93 | 10 |
| | 130 | 27 |
| | 130 | 34 |
| | 131 | 54 |
| | 133 | 4 |
| V411-260-008-00 | 6 | 6 |
| | 7 | 4 |
| | 9 | 3 |
| | 9 | 37 |
| | 25 | 5 |
| | 39 | 5 |
| V411-260-008-00 | 39 | 15 |
| | 39 | 18 |
| | 40 | 27 |
| | 50 | 7 |
| | 74 | 17 |
| | 75 | 17 |
| | 77 | 5 |
| | 79 | 3 |
| | 80 | 3 |
| | 81 | 3 |
| | 89 | 9 |
| | 92 | 2 |
| | 92 | 13 |
| | 93 | 2 |
| | 123 | 6 |
| | 129 | 16 |
| | 131 | 81 |
| V411-260-010-00 | 1 | 5 |
| | 60 | 20 |
| | 61 | 20 |
| V411-260-012-00 | 1 | 10 |
| | 106 | 3 |
| | 131 | 27 |
| V411-260-014-00 | 6 | 17 |
| V411-260-016-00 | 9 | 27 |
| V411-260-018-00 | 50 | 11 |
| | 51 | 5 |
| V411-700-003-00 | 109 | 13 |
| | 157 | 12 |
| | 157 | 32 |
| | 157 | 39 |
| | 158 | 10 |
| | 158 | 30 |
| | 158 | 37 |
| | 159 | 12 |
| | 159 | 32 |
| | 159 | 39 |
| | 160 | 10 |
| | 160 | 30 |
| | 160 | 37 |
| V411-700-004-00 | 108 | 23 |
| | 157 | 8 |
| | 157 | 16 |
| | 157 | 41 |
| | 158 | 8 |

| Part Code | Fig. | Key |
|---|---|---|
| V411-700-004-00 | 158 | 14 |
| | 158 | 39 |
| | 159 | 8 |
| | 159 | 16 |
| | 159 | 41 |
| | 160 | 8 |
| | 160 | 14 |
| | 160 | 39 |
| V411-700-005-00 | 112 | 15 |
| V411-700-006-00 | 110 | 4 |
| | 111 | 23 |
| | 113 | 95 |
| | 115 | 30 |
| | 121 | 21 |
| V411-700-008-00 | 108 | 5 |
| | 113 | 105 |
| V411-700-010-00 | 108 | 31 |
| | 108 | 36 |
| | 108 | 44 |
| | 108 | 46 |
| V411-700-012-00 | 111 | 40 |
| V500-162-002-00 | 92 | 3 |
| | 92 | 20 |
| | 93 | 3 |
| V500-162-002-50 | 24 | 3 |
| V500-162-501-50 | 20 | 3 |
| | 20 | 10 |
| | 39 | 20 |
| | 39 | 32 |
| | 91 | 31 |
| | 126 | 46 |
| | 131 | 82 |
| V500-162-503-50 | 115 | 12 |
| V500-163-001-50 | 52 | 20 |
| | 92 | 14 |
| V500-163-002-00 | 7 | 11 |
| | 7 | 27 |
| | 9 | 21 |
| | 10 | 7 |
| | 39 | 2 |
| | 39 | 10 |
| | 39 | 17 |
| | 40 | 14 |
| | 50 | 9 |
| | 52 | 21 |

| Part Code | Fig. | Key |
|---|---|---|
| V500-163-002-00 | 67 | 65 |
| | 67 | 74 |
| | 68 | 64 |
| | 68 | 73 |
| | 99 | 5 |
| | 99 | 18 |
| | 123 | 5 |
| | 147 | 6 |
| | 147 | 15 |
| | 147 | 27 |
| V500-163-002-50 | 70 | 15 |
| | 71 | 15 |
| V500-163-003-00 | 67 | 76 |
| | 68 | 75 |
| V500-163-003-50 | 50 | 12 |
| | 51 | 6 |
| | 149 | 9 |
| V500-163-004-00 | 37 | 7 |
| | 38 | 7 |
| | 65 | 5 |
| | 65 | 24 |
| | 67 | 67 |
| | 68 | 2 |
| | 68 | 66 |
| V500-164-002-50 | 20 | 12 |
| V522-100-601-60 | 100 | 4 |
| | 116 | 5 |
| | 129 | 18 |
| V522-100-801-80 | 8 | 7 |
| | 11 | 6 |
| | 11 | 19 |
| | 15 | 17 |
| | 16 | 9 |
| | 26 | 2 |
| | 33 | 3 |
| | 33 | 28 |
| | 33 | 62 |
| | 34 | 3 |
| | 34 | 29 |
| | 34 | 56 |
| | 35 | 3 |
| | 35 | 28 |
| | 35 | 64 |
| | 36 | 3 |
| | 36 | 29 |

| Part Code | Fig. | Key |
|---|---|---|
| V522-100-801-80 | 36 | 60 |
| | 44 | 4 |
| | 44 | 10 |
| V523-100-300-80 | 154 | 13 |
| | 155 | 13 |
| V600-110-600-00 | 44 | 22 |
| V600-110-600-10 | 100 | 19 |
| | 100 | 48 |
| V600-110-600-20 | 124 | 14 |
| | 125 | 14 |
| V600-110-600-30 | 100 | 38 |
| | 116 | 21 |
| V600-110-600-40 | 44 | 24 |
| V600-110-600-50 | 100 | 50 |
| | 124 | 6 |
| | 125 | 6 |
| V600-110-600-60 | 18 | 12 |
| | 100 | 17 |
| V600-110-600-70 | 23 | 2 |
| V600-110-620-10 | 33 | 23 |
| | 34 | 24 |
| | 35 | 23 |
| | 36 | 24 |
| | 124 | 13 |
| | 125 | 13 |
| V600-110-620-30 | 17 | 6 |
| | 23 | 3 |
| | 32 | 2 |
| | 33 | 24 |
| | 34 | 25 |
| | 35 | 24 |
| | 36 | 25 |
| | 96 | 10 |
| | 96 | 16 |
| | 96 | 21 |
| | 96 | 34 |
| | 96 | 37 |
| | 116 | 33 |
| V600-110-620-40 | 13 | 2 |
| | 15 | 14 |
| | 17 | 2 |
| | 33 | 29 |
| | 33 | 38 |
| | 34 | 30 |
| | 35 | 29 |

# Numerical Index




| Part Code | Fig. | Key |
|---|---|---|
| V600-110-620-40 | 35 | 38 |
| | 36 | 30 |
| | 100 | 10 |
| | 116 | 7 |
| | 116 | 10 |
| | 116 | 13 |
| | 148 | 3 |
| | 148 | 9 |
| | 148 | 15 |
| | 153 | 14 |
| V600-110-620-50 | 12 | 2 |
| | 18 | 21 |
| | 26 | 5 |
| V600-110-620-60 | 14 | 11 |
| | 26 | 42 |
| | 33 | 54 |
| | 34 | 50 |
| | 35 | 32 |
| | 35 | 54 |
| | 36 | 50 |
| V600-110-620-70 | 15 | 10 |
| | 16 | 11 |
| | 26 | 25 |
| V600-110-620-80 | 33 | 55 |
| | 34 | 51 |
| | 35 | 55 |
| | 36 | 51 |
| V600-110-620-90 | 26 | 9 |
| | 26 | 13 |
| V600-110-630-20 | 12 | 3 |
| | 18 | 2 |
| V600-110-630-30 | 14 | 10 |
| | 17 | 5 |
| | 18 | 9 |
| | 23 | 10 |
| V600-110-630-40 | 33 | 32 |
| | 35 | 32-A |
| V600-110-630-50 | 13 | 3 |
| | 18 | 22 |
| | 23 | 11 |
| | 26 | 40 |
| | 34 | 33 |
| | 36 | 33 |
| V600-110-630-60 | 15 | 2 |
| V600-110-690-50 | 44 | 25 |

| Part Code | Fig. | Key |
|---|---|---|
| V600-150-600-00 | 126 | 69 |
| V600-150-600-20 | 101 | 5 |
| | 108 | 61 |
| V600-150-600-60 | 8 | 19 |
| | 97 | 5 |
| V600-150-600-70 | 95 | 24 |
| V600-150-620-20 | 4 | 5 |
| | 96 | 8 |
| | 96 | 30 |
| V600-150-620-40 | 31 | 10 |
| V682-200-000-80 | 152 | 8 |
| V682-200-001-00 | 19 | 7 |
| | 19 | 13 |
| | 19 | 19 |
| | 100 | 36 |
| V704-140-010-00 | 126 | 70 |
| V704-140-012-00 | 91 | 8 |
| | 95 | 15 |
| | 95 | 35 |
| | 116 | 54 |
| | 122 | 16 |
| V704-140-014-00 | 16 | 10 |
| V704-140-015-00 | 4 | 10 |
| | 39 | 30 |
| | 44 | 29 |
| | 52 | 8 |
| | 64 | 7 |
| | 64 | 39 |
| | 67 | 7 |
| | 67 | 39 |
| | 68 | 6 |
| | 68 | 38 |
| | 91 | 12 |
| | 95 | 10 |
| V704-140-017-00 | 9 | 28 |
| | 96 | 12 |
| | 96 | 22 |
| | 96 | 32 |
| | 96 | 39 |
| | 153 | 39 |
| V704-140-018-00 | 100 | 28 |
| V704-140-020-00 | 33 | 40 |
| | 35 | 40 |
| | 100 | 12 |
| | 116 | 8 |

| Part Code | Fig. | Key |
|---|---|---|
| V704-140-020-00 | 116 | 11 |
| | 116 | 14 |
| | 148 | 4 |
| | 148 | 10 |
| | 148 | 16 |
| | 153 | 29 |
| V704-140-022-00 | 17 | 9 |
| V704-140-025-00 | 33 | 11 |
| | 34 | 11 |
| | 34 | 32 |
| | 35 | 11 |
| | 36 | 11 |
| | 36 | 32 |
| | 108 | 55 |
| | 123 | 7 |
| V704-140-028-00 | 33 | 15 |
| | 34 | 15 |
| | 35 | 15 |
| | 36 | 15 |
| V704-140-032-00 | 30 | 2 |
| V704-140-035-00 | 95 | 25 |
| V705-140-025-00 | 33 | 43 |
| | 34 | 40 |
| | 35 | 43 |
| | 36 | 40 |
| V705-140-030-00 | 153 | 38 |
| V705-140-032-00 | 153 | 31 |
| V705-140-035-00 | 116 | 22 |
| V705-140-040-00 | 23 | 4 |
| | 32 | 3 |
| | 96 | 11 |
| | 96 | 17 |
| | 96 | 23 |
| | 96 | 35 |
| | 96 | 38 |
| V705-140-047-00 | 15 | 15 |
| | 18 | 10 |
| | 31 | 11 |
| | 33 | 39 |
| | 34 | 38 |
| | 35 | 39 |
| | 36 | 38 |
| | 100 | 11 |
| | 116 | 15 |
| | 153 | 30 |

# Numerical Index




| Part Code | Fig. | Key |
|---|---|---|
| V705-140-052-00 | 18 | 23 |
| | 26 | 6 |
| | 33 | 10 |
| | 34 | 10 |
| | 35 | 10 |
| | 36 | 10 |
| V706-140-045-00 | 26 | 10 |
| V707-140-055-00 | 8 | 20 |
| | 100 | 18 |
| V707-140-062-00 | 18 | 24 |
| | 23 | 12 |
| | 33 | 34 |
| | 34 | 34 |
| | 35 | 34 |
| | 36 | 34 |
| | 95 | 26 |
| V707-140-072-00 | 15 | 3 |
| | 26 | 24 |
| V707-140-085-00 | 26 | 11 |
| V710-140-006-00 | 131 | 29 |
| | 131 | 70 |
| V710-140-008-00 | 91 | 18 |
| V720-101-900-80 | 11 | 12 |
| | 11 | 23 |
| V720-101-900-90 | 116 | 41 |
| V720-101-901-00 | 19 | 5 |
| | 19 | 11 |
| | 19 | 17 |
| | 100 | 33 |
| | 108 | 13 |
| V720-102-401-20 | 47 | 9 |
| V720-102-401-50 | 8 | 8 |
| | 116 | 42 |
| V720-103-502-80 | 154 | 21 |
| | 155 | 21 |
| V720-103-503-00 | 47 | 2 |
| V720-103-503-90 | 8 | 2 |
| | 45 | 2 |
| V720-111-900-60 | 53 | 7 |
| V720-111-900-90 | 152 | 7 |
| V720-112-401-10 | 49 | 2 |
| | 53 | 17 |
| | 54 | 8 |
| | 54 | 10 |
| | 153 | 28 |
| V720-112-401-40 | 45 | 5 |
| | 53 | 6 |
| | 152 | 5 |
| | 153 | 27 |
| V720-112-401-60 | 53 | 14 |
| V720-112-401-80 | 53 | 16 |
| V721-103-103-50 | 8 | 3 |
| V721-103-108-50 | 26 | 17 |
| V723-101-501-50 | 16 | 20 |
| V723-112-002-90 | 152 | 15 |
| V724-122-901-20 | 152 | 13 |
| V740-117-300-60 | 116 | 35 |
| V742-112-220-40 | 44 | 6 |
| V742-125-350-50 | 44 | 5 |
| V744-112-220-70 | 18 | 34 |
| | 19 | 2 |
| | 19 | 9 |
| | 19 | 15 |
| | 23 | 15 |
| | 100 | 30 |
| V744-112-250-70 | 33 | 44 |
| | 34 | 41 |
| | 35 | 44 |
| | 36 | 41 |
| V744-115-300-70 | 113 | 18 |
| | 113 | 54 |
| V744-117-300-70 | 100 | 39 |
| V744-117-350-70 | 33 | 25 |
| | 34 | 26 |
| | 35 | 25 |
| | 36 | 26 |
| | 116 | 23 |
| | 148 | 5 |
| | 148 | 12 |
| V744-117-400-80 | 32 | 4 |
| V744-120-300-70 | 113 | 12 |
| | 113 | 48 |
| V744-120-400-70 | 17 | 3 |
| V744-120-470-70 | 15 | 16 |
| | 100 | 13 |
| | 116 | 16 |
| | 148 | 11 |
| | 148 | 17 |
| | 153 | 34 |
| V744-125-350-70 | 14 | 15 |
| V744-125-350-70 | 15 | 24 |
| | 18 | 30 |
| | 21 | 2 |
| | 108 | 56 |
| V744-125-450-70 | 100 | 51 |
| V744-125-470-80 | 15 | 12 |
| V744-125-521-00 | 26 | 7 |
| V760-150-000-00 | 31 | 13 |
| | 50 | 5 |
| | 92 | 9 |
| | 93 | 9 |
| V780-140-000-1T | 53 | 15 |
| | 152 | 17 |
| V780-140-000-2T | 53 | 9 |
| V780-140-000-6B | 11 | 13 |
| V781-160-000-4B | 26 | 27 |
| | 33 | 7 |
| | 34 | 7 |
| | 35 | 7 |
| | 36 | 7 |
| V781-160-000-6B | 11 | 10 |
| V793-112-160-40 | 152 | 14 |
| W296-134-008-60 | 55 | 6 |
| | 56 | 5 |

# Alpabetical Index

6004-097-641-10


| Description | Fig. | Key |
|---|---|---|
| ADAPTER/320X080 ASSY | 23 | 1 |
| ARM/CONTROL | 21 | 30 |
| ARM/FLOATING COMP | 21 | 20 |
| ARM/TENSION | 23 | 2 |
| | 23 | 2-A |
| ARMATURE/STARTE ASSY | 29 | 5 |
| BALL, STEEL | 1 | 5 |
| BEARING, RB/6203 | 21 | 13 |
| BEARING, THRUST CRANK | 5 | 13 |
| | 6 | 2 |
| | 6 | 4 |
| BEARING/BALL | 21 | 14 |
| BEARING/CONNECTING R | 13 | 7 |
| BEARING/CRANK/LOWER | 5 | 12 |
| | 5 | 12-A |
| BEARING/CRANK/UPPER | 5 | 11 |
| | 5 | 11-A |
| BEARING/CRANKSET | 5 | 10-A |
| BEARING/NEEDLE | 29 | 8 |
| | 29 | 9 |
| BEARING/OILLESS | 29 | 12 |
| | 29 | 14 |
| | 29 | 16 |
| BEARING/THRUST/CRANK | 5 | 13-A |
| | 6 | 2-A |
| | 6 | 4-A |
| BEARING/WITH SHOCKAB | 29 | 13 |
| BELT/VNR5A36.0 | 19 | 5 |
| BODY/NOZZLE HOLDER | 27 | 2 |
| BODY/OILPUMP | 16 | 2 |
| BOLT | 1 | 7 |
| | 5 | 2 |
| | 9 | 34 |
| | 11 | 18 |
| BOLT, ADJUST | 5 | 29 |
| BOLT, JOINT | 16 | 11 |
| BOLT, S/M6X12/7T | 12 | 5 |
| | 21 | 16 |
| BOLT, S/M6X25/7T | 16 | 5 |
| BOLT, S/M8X20/7T | 9 | 35 |
| BOLT, S/M8X25/7T | 4 | 3 |
| BOLT, SEMS/M10X20, 7T | 8 | 3 |
| BOLT, SEMS/M10X25, 7T | 24 | 8 |
| BOLT/CONNECTINGROD | 13 | 6 |
| | 13 | 6-A |
| BOLT/CRANK | 15 | 9 |
| BOLT/FLANGE | 15 | 7 |
| BOLT/M6 | 9 | 28 |
| | 9 | 29 |
| BOLT/M6X10 | 21 | 18 |
| BOLT/M6X18 | 21 | 26 |
| BOLT/M8X20/7T | 21 | 8 |
| BOLT/THROUGH | 29 | 30 |
| BOLT/WASHERHEAD | 28 | 8 |
| BOLT/WS | 16 | 4 |
| BRACKET ROCKER SHAFT | 11 | 12 |
| BRACKET, ROCKER SHAFT | 11 | 13 |
| BRG/CONROD/UN050 SET | 6 | 5 |
| BRG/CONROD/UN100 SET | 6 | 6 |
| BRG/CRANK/UN050 SET | 6 | 1 |
| | 6 | 1-A |
| BRG/CRANK/UN100 SET | 6 | 3 |
| | 6 | 3-A |
| BRUSH/STARTER | 29 | 2 |
| CAMSHAFT/INJECTION P | 21 | 10 |
| | 21 | 10-A |
| CAP, BLANK/30 | 9 | 31 |
| CAP, OIL FILLER | 2 | 2 |
| CAP, SEALING | 1 | 2 |
| CARTRIDGE/OILFILTER | 16 | 13 |
| CLAMP, STRAINER | 16 | 8 |
| CLAMP/WIRE/10-15 | 17 | 14 |
| | 18 | 14 |
| CLIP/HOSE/7.6-8.2 | 22 | 4 |
| CLIP/HOSE/8.7-9.3 | 22 | 8 |
| CLUTCH/STARTER ASSY | 29 | 6 |
| CONNECTINGROD ASSY | 13 | 5 |
| CONNECTOR, OIL FILTER | 5 | 24 |
| CONNECTOR/FUEL | 22 | 1 |
| CONNECTOR/GLOWPLUG | 25 | 4 |
| CORRUGATEDTUBE | 22 | 5 |
| COVER | 29 | 11 |
| COVER, INJ PUMP | 5 | 25 |
| COVER/CYLINDER HEAD | 2 | 1 |
| CRANKSHAFT ASSY | 15 | 1 |
| CUP/SEALING/12 | 5 | 7 |
| CUP/SEALING/16 | 9 | 3 |
| CUP/SEALING/28 | 5 | 3 |
| CUP/SEALING/36 | 5 | 4 |
| CUTTER, VALVE | 11 | 5 |
| CYLINDERBLOCK ASSY | 5 | 1 |
| | 5 | 1-A |
| | 5 | 1-B |
| | 5 | 1-C |
| CYLINDERHEAD ASSY | 1 | 1 |
| | 1 | 1-A |
| DOWEL | 5 | 21 |
| ELEMENT ASSY | 28 | 7 |
| FLANGEBOLT/M10X20 | 10 | 2 |
| FLANGEBOLT/M10X70 | 24 | 5 |
| FLANGEBOLT/M6X10 | 7 | 4 |
| FLANGEBOLT/M6X12 | 5 | 27 |
| FLANGEBOLT/M6X16 | 19 | 2 |
| | 25 | 7 |
| FLANGEBOLT/M8X16 | 9 | 8 |
| | 16 | 9 |
| FLANGEBOLT/M8X20 | 3 | 3 |
| | 10 | 4 |
| | 17 | 11 |
| | 17 | 17 |
| | 18 | 11 |
| | 18 | 17 |
| | 24 | 3 |
| FLANGEBOLT/M8X25 | 9 | 36 |
| | 17 | 22 |
| | 18 | 21 |
| FLANGEBOLT/M8X30 | 9 | 11 |
| FLANGEBOLT/M8X40 | 3 | 4 |
| | 17 | 23 |
| | 18 | 22 |
| FLANGEBOLT/M8X45 | 9 | 9 |
| | 17 | 6 |
| | 18 | 6 |
| FLANGEBOLT/M8X50 | 11 | 19 |
| FLANGEBOLT/M8X55 | 9 | 6 |
| FLANGEBOLT/M8X75 | 9 | 10 |
| | 17 | 18 |
| | 18 | 18 |
| FLANGEBOLT/M8X85 | 9 | 5 |
| FLYWEIGHT | 21 | 17 |
| FLYWHEEL ASSY | 15 | 5 |
| FRAME/COMMUTATOR END | 29 | 10 |
| GASKET | 2 | 5 |
| | 17 | 2 |
| | 18 | 2 |

# Alpabetical Index




| Description | Fig. | Key |
|---|---|---|
| GASKET | 25 | 6 |
| | 26 | 5 |
| | 26 | 21 |
| GASKET, EXH. MANIFOLD | 4 | 2 |
| | 26 | 7 |
| GASKET, INLET MANIFOL | 3 | 2 |
| | 26 | 6 |
| GASKET, NOZZLE | 20 | 3 |
| GASKET, SPACER | 18 | 9 |
| | 26 | 18 |
| GASKET/COVER | 5 | 26 |
| | 26 | 11 |
| GASKET/CYLINDERHEAD | 1 | 6 |
| | 26 | 3 |
| GASKET/DELIVERYVALVE | 28 | 4 |
| GASKET/GEARCASE | 9 | 23 |
| | 26 | 14 |
| GASKET/HOUSING | 17 | 16 |
| | 18 | 16 |
| | 26 | 19 |
| GASKET/PLATE | 9 | 33 |
| | 26 | 15 |
| GASKET/SPACER | 17 | 9 |
| | 18 | 9-A |
| | 26 | 18-A |
| GASKET/WATER PUMP | 18 | 5 |
| | 26 | 17 |
| GASKET/WATERPUMP | 17 | 5 |
| | 18 | 5-A |
| | 26 | 17-A |
| GEAR/CAMSHAFT | 12 | 2 |
| GEAR/CRANK | 15 | 3 |
| GEAR/IDLE ASSY | 12 | 6 |
| GEAR/INJECTIONPUMP | 21 | 11 |
| | 21 | 11-A |
| GEAR/STARTER PLANETA | 29 | 17 |
| GEAR/STARTERINTERNAL | 29 | 18 |
| GEARCASE ASSY | 9 | 1 |
| GENERATOR ASSY | 24 | 1 |
| GLOWPLUG | 25 | 3 |
| GUIDE/HARNESS COMP | 10 | 3 |
| GUIDE/HARNESS/A | 17 | 24 |
| | 18 | 23 |
| GUIDE/LEVELGAGE COMP | 5 | 32 |
| HANGER | 10 | 1 |
| HOLDER/DELIVERYVALVE | 28 | 2 |
| HOLDER/NOZZLE ASSY | 27 | 1 |
| HOLDER/STARTER ASSY | 29 | 3 |
| HOSE, RUBBER | 22 | 6 |
| HOSE/RUBBER | 2 | 6 |
| | 17 | 13 |
| | 18 | 13 |
| HOSE/RUBBER/160 | 22 | 3 |
| HOUSING ASSY | 28 | 6 |
| HOUSING/STARTER ASSY | 29 | 7 |
| HOUSING/THERMOSTAT | 17 | 15 |
| | 18 | 15 |
| INJECTIONNOZZLE ASSY | 20 | 1 |
| INJECTIONPUMP ASSY | 21 | 1 |
| JOINTT-TYPE | 22 | 7 |
| KEY/07X05X09 | 12 | 3 |
| | 21 | 12 |
| KEY/07X05X43 | 15 | 4 |
| LEVELGAGE | 5 | 31 |
| LEVER(CONTROL) COMP | 21 | 25 |
| LEVER/PINIONDRIVE | 29 | 19 |
| MANIFOLD(INLET) ASSY | 3 | 1 |
| MANIFOLD/EXHAUST | 4 | 1 |
| METAL, CRANK SET | 5 | 10 |
| NIPPLE | 5 | 22 |
| NOZZLE ASSY | 27 | 51 |
| NUT | 11 | 17 |
| | 27 | 50 |
| | 29 | 28 |
| | 29 | 29 |
| | 29 | 34 |
| NUT, CAP/M8 | 9 | 15 |
| NUT/CAP | 2 | 4 |
| | 9 | 15-A |
| NUT/FLANGE/M10 | 24 | 6 |
| NUT/M08 | 9 | 7 |
| | 11 | 20 |
| | 17 | 7 |
| | 17 | 12 |
| | 18 | 7 |
| | 18 | 12 |
| | 21 | 9 |
| NUT/M6 | 5 | 30 |
| | 9 | 30 |
| | 21 | 27 |
| NUT/M6 | 21 | 31 |
| NUT/M8 | 9 | 14 |
| | 9 | 14-A |
| | 29 | 32 |
| NUT/NOZZLERETAINING | 27 | 5 |
| NUT/PINIONSTOP | 29 | 23 |
| OILPAN COMP | 7 | 1 |
| OILPUMP ASSY | 16 | 1 |
| OILSEAL | 5 | 14-A |
| ORING | 28 | 3 |
| O-RING/1A, P15 | 16 | 7 |
| | 26 | 16 |
| O-RING/1A, P18 | 7 | 3 |
| O-RING/1A, P8 | 21 | 28 |
| O-RING/1A, S55 | 17 | 21 |
| | 18 | 20 |
| | 26 | 20 |
| PACKING | 9 | 16 |
| | 16 | 12 |
| | 26 | 13 |
| PIECE, DISTANCE | 27 | 6 |
| PIN | 5 | 17 |
| | 5 | 28 |
| | 9 | 19 |
| PIN, CONTROL | 21 | 22 |
| PIN, GROOVE | 9 | 22 |
| PIN, NOZZLE HOLDER | 27 | 3 |
| PIN, PISTON | 13 | 3 |
| PIN, ST, B/10X18 | 15 | 2 |
| PIN/ARM | 9 | 17 |
| PIN/IDLEGEAR | 5 | 6 |
| PIN/INJECTIONPUMP | 28 | 10 |
| PIN/SNAP | 9 | 18 |
| PIN/STRAIGHT | 5 | 16 |
| | 5 | 16-A |
| | 16 | 3 |
| PIN/TUBE | 5 | 15 |
| PIPE, OIL | 16 | 10 |
| PIPE/FUEL | 22 | 2 |
| PIPE/INJECTION ASSY | 20 | 4 |
| | 20 | 5 |
| | 20 | 6 |
| PIPE/WATEROUTLET | 17 | 20 |
| | 18 | 19 |
| PISTON | 13 | 1 |

# Alpabetical Index

6004-097-641-10


| Description | Fig. | Key |
|---|---|---|
| PISTON(OV/050) | 14 | 1 |
| PISTON(OV/100) | 14 | 3 |
| PISTON/VALVE/RELIEF | 9 | 25 |
| PLATE | 28 | 11 |
| | 29 | 27 |
| PLATE,THRUST INJPUMP | 21 | 15 |
| PLATE/ADJUST | 24 | 2 |
| PLATE/ADJUSTING | 28 | 9 |
| PLATE/FRONT | 9 | 32 |
| PLATE/REAR | 8 | 1 |
| PLATE/TAPPET/AD 0.2 | 28 | 23 |
| PLATE/TAPPET/AD 0.25 | 28 | 27 |
| PLATE/TAPPET/AD 0.3 | 28 | 24 |
| PLATE/TAPPET/AD 0.35 | 28 | 28 |
| PLATE/TAPPET/AD 0.4 | 28 | 25 |
| PLATE/TAPPET/AD 0.45 | 28 | 29 |
| PLATE/TAPPET/AD 0.5 | 28 | 26 |
| PLATE/TAPPET/AD 0.55 | 28 | 30 |
| PLATE/TAPPET/AD 0.6 | 28 | 18 |
| PLATE/TAPPET/AD 0.65 | 28 | 31 |
| PLATE/TAPPET/AD 0.7 | 28 | 19 |
| PLATE/TAPPET/AD 0.8 | 28 | 20 |
| PLATE/TAPPET/AD 0.9 | 28 | 21 |
| PLATE/TAPPET/AD 1.0 | 28 | 22 |
| PLATE/THRUST | 12 | 4 |
| PLATE/THRUST/INJECTI | 21 | 15-A |
| PLATE/WATER PUMP | 17 | 3 |
| | 18 | 3 |
| PLUG | 11 | 11 |
| PLUG/M14X1.5 | 7 | 2 |
| PLUG/PT1/2 | 1 | 3 |
| PLUG/PT1/8 | 5 | 5 |
| | 9 | 2 |
| PLUG/SCREW | 9 | 20 |
| PLUG/SCREW/SEAL | 5 | 23 |
| POINTER | 8 | 2 |
| PULLEY/CRANK | 15 | 8 |
| PULLEY/WATERPUMP | 19 | 1 |
| RACK/CONTROL ASSY | 28 | 13 |
| REPAIR/ENGINE SET | 26 | 1 |
| | 26 | 1-A |
| RING,SNAP | 13 | 4 |
| RING,SNAP/12 C | 9 | 27 |
| RING,SNAP/16 C | 11 | 15 |
| RING,SNAP/4 E | 21 | 23 |

| Description | Fig. | Key |
|---|---|---|
| RING/PISTON SET | 13 | 2 |
| RING/SNAP | 29 | 21 |
| | 29 | 22 |
| RINGGEAR | 15 | 6 |
| RINGPISTON/OV050 SET | 14 | 2 |
| RINGPISTON/OV100 SET | 14 | 4 |
| RINK/CONTROL | 21 | 21 |
| ROCKERARM | 11 | 9 |
| ROCKERSHAFT ASSY | 11 | 8 |
| ROD,PUSH | 11 | 7 |
| SCREW | 29 | 33 |
| SCREW ADJUST | 11 | 16 |
| SCREW/HOLLOW | 21 | 3 |
| SCREW/WATER PUMP | 17 | 4 |
| | 18 | 4 |
| SEAL,BEARING CAP | 5 | 8 |
| | 26 | 8 |
| SEAL,BEARING CAP/7 | 5 | 9 |
| | 26 | 9 |
| SEAL,CYL.HEAD COVER | 2 | 3 |
| | 26 | 4 |
| SEAL,OIL | 1 | 4 |
| | 5 | 14 |
| | 9 | 4 |
| | 26 | 2 |
| | 26 | 10 |
| | 26 | 12 |
| SEAT/SPRING/LOWER | 28 | 17 |
| SEAT/SPRING/UPPER | 28 | 15 |
| SEAT/VALVESPRING | 11 | 4 |
| SHAFT,CAM | 12 | 1 |
| SHAFT/ROCKERARM ASSY | 11 | 10 |
| SHAFT/STARTER PLANET | 29 | 15 |
| SHIM/INJECTIONPUMP | 21 | 4 |
| | 21 | 5 |
| | 21 | 6 |
| | 21 | 7 |
| SLEEVE/PLUNGER | 28 | 14 |
| SOLENOID | 25 | 5 |
| SPACER,PUMP.WATER | 17 | 8 |
| | 18 | 8 |
| SPACER/FAN | 19 | 3 |
| | 19 | 4 |
| | 19 | 4-A |
| SPRING | 11 | 14 |

| Description | Fig. | Key |
|---|---|---|
| SPRING,RETURN | 21 | 29 |
| SPRING,STARTING | 21 | 34 |
| SPRING/DELIVERYVALVE | 28 | 1 |
| SPRING/GOVERNOR | 21 | 24 |
| SPRING/NOZZLEHOLDER | 27 | 4 |
| SPRING/PUMPPLUNGER | 28 | 16 |
| SPRING/RELIEF VALVE | 9 | 26 |
| SPRING/STARTERBRUSH | 29 | 4 |
| SPRING/VALVE | 11 | 3 |
| STARTER ASSY | 24 | 7 |
| STOPPER/FULLLOAD | 9 | 13 |
| STRAINER | 16 | 6 |
| STUD | 1 | 8 |
| | 4 | 4 |
| | 5 | 19 |
| | 5 | 20 |
| STUD/M8X40 | 5 | 18 |
| | 17 | 10 |
| | 18 | 10 |
| SWITCH/MAGNETIC ASSY | 29 | 20 |
| SWITCH/OILPRESSURE | 25 | 1 |
| SWITCH/OVERHEAT | 25 | 2 |
| TAPPET | 11 | 6 |
| TAPPET/INJECTIO ASSY | 28 | 12 |
| THERMOSTAT | 17 | 19 |
| THRUSTPIECE | 21 | 19 |
| VALVE ASSY | 28 | 5 |
| VALVE/EXHAUST | 11 | 2 |
| VALVE/INTAKE | 11 | 1 |
| VALVE/RELIEF ASSY | 9 | 24 |
| WASHER | 20 | 2 |
| | 29 | 31 |
| WASHER,PL/M6 | 21 | 32 |
| WASHER,SP/M6 | 21 | 33 |
| WASHER/0.9 | 27 | 7 |
| WASHER/0.925 | 27 | 8 |
| WASHER/0.95 | 27 | 9 |
| WASHER/0.975 | 27 | 10 |
| WASHER/08X14X01 | 9 | 12 |
| | 9 | 21 |
| | 26 | 22 |
| WASHER/1.0 | 27 | 11 |
| WASHER/1.025 | 27 | 12 |
| WASHER/1.05 | 27 | 13 |
| WASHER/1.075 | 27 | 14 |

| Description | Fig. | Key | Description | Fig. | Key | Description | Fig. | Key |
|---|---|---|---|---|---|---|---|---|
| WASHER/1.1 | 27 | 15 | | | | | | |
| WASHER/1.125 | 27 | 16 | | | | | | |
| WASHER/1.15 | 27 | 17 | | | | | | |
| WASHER/1.175 | 27 | 18 | | | | | | |
| WASHER/1.2 | 27 | 19 | | | | | | |
| WASHER/1.225 | 27 | 20 | | | | | | |
| WASHER/1.25 | 27 | 21 | | | | | | |
| WASHER/1.275 | 27 | 22 | | | | | | |
| WASHER/1.3 | 27 | 23 | | | | | | |
| WASHER/1.325 | 27 | 24 | | | | | | |
| WASHER/1.35 | 27 | 25 | | | | | | |
| WASHER/1.375 | 27 | 26 | | | | | | |
| WASHER/1.4 | 27 | 27 | | | | | | |
| WASHER/1.425 | 27 | 28 | | | | | | |
| WASHER/1.45 | 27 | 29 | | | | | | |
| WASHER/1.475 | 27 | 30 | | | | | | |
| WASHER/1.5 | 27 | 31 | | | | | | |
| WASHER/1.525 | 27 | 32 | | | | | | |
| WASHER/1.55 | 27 | 33 | | | | | | |
| WASHER/1.575 | 27 | 34 | | | | | | |
| WASHER/1.6 | 27 | 35 | | | | | | |
| WASHER/1.625 | 27 | 36 | | | | | | |
| WASHER/1.65 | 27 | 37 | | | | | | |
| WASHER/1.675 | 27 | 38 | | | | | | |
| WASHER/1.7 | 27 | 39 | | | | | | |
| WASHER/1.725 | 27 | 40 | | | | | | |
| WASHER/1.75 | 27 | 41 | | | | | | |
| WASHER/1.775 | 27 | 42 | | | | | | |
| WASHER/1.8 | 27 | 43 | | | | | | |
| WASHER/1.825 | 27 | 44 | | | | | | |
| WASHER/1.85 | 27 | 45 | | | | | | |
| WASHER/1.875 | 27 | 46 | | | | | | |
| WASHER/1.9 | 27 | 47 | | | | | | |
| WASHER/1.925 | 27 | 48 | | | | | | |
| WASHER/1.95 | 27 | 49 | | | | | | |
| WASHER/9X22X2 | 24 | 4 | | | | | | |
| WASHER/AIR BLEEDER | 21 | 2 | | | | | | |
| WASHER/SK | 29 | 24 | | | | | | |
| | 29 | 25 | | | | | | |
| | 29 | 26 | | | | | | |
| WATERPUMP ASSY | 17 | 1 | | | | | | |
| | 18 | 1 | | | | | | |
| YOKE/STARTER ASSY | 29 | 1 | | | | | | |

# Alpabetical Index

2233-097-110-10


| Description | Fig. | Key |
|---|---|---|
| ACCUMULATOR ASSY | 49 | 1 |
| ACTUATOR ASSY | 6 | 30 |
| | 7 | 13 |
| | 20 | 17 |
| | 90 | 7 |
| | 92 | 24 |
| | 111 | 44 |
| | 133 | 8 |
| ADAPTER | 47 | 11 |
| ADAPTER(1/4) RETURN | 47 | 29 |
| ADAPTER,STRAIGHT | 53 | 12 |
| ADAPTER/0-/R1/4XM16 | 47 | 12 |
| ADAPTER/45DEG | 47 | 13-A |
| ADAPTER/90 G1/2 ASSY | 45 | 3 |
| ADAPTER/90DEG/PUMP | 46 | 5 |
| | 53 | 11 |
| | 146 | 6 |
| ADAPTER/L/G1/4 ASSY | 54 | 9 |
| ADAPTER/L/R1/8 | 47 | 28 |
| ADAPTER/PF1/4 ASSY | 54 | 7 |
| ADAPTER/RC1/4 | 47 | 13 |
| ADAPTER/SUCTION COMP | 47 | 1 |
| ADAPTERFILTER | 11 | 14 |
| ADAPTOR/3X8 | 11 | 20 |
| ADAPTOR/G3/8XM16ASSY | 45 | 4 |
| ADAPTOR/STRAIGHT | 146 | 7 |
| ADPTER/G1/4.1/4 | 54 | 7-A |
| ANGLE | 2 | 27 |
| ARM LH | 124 | 16 |
| ARM RH | 125 | 16 |
| ARM,HST LEVER | 6 | 16 |
| ARM,PLANTING/E/LH | 154 | 1 |
| ARM,PLANTING/E/RH | 155 | 1 |
| ARM,PLANTING/LH/E | 154 | 1-A |
| ARM,PLANTING/RH/E | 155 | 1-A |
| ARM/ACCELERATOR/BACK | 10 | 8 |
| | 10 | 11 |
| ARM/ADJUST/D | 108 | 24 |
| ARM/AUTO ACCELERATOR | 10 | 2 |
| ARM/BRAKE/8/NP COMP | 39 | 3 |
| ARM/BRAKE/LH COMP | 15 | 22 |
| | 15 | 22-A |
| ARM/BRAKE/LH/NP COMP | 40 | 3 |
| ARM/BRAKE/RH COMP | 15 | 23 |
| | 15 | 23-A |
| ARM/CLUCH/FERTILIZE | 33 | 45 |
| | 35 | 45 |
| ARM/CLUCH/ROTOR | 33 | 46 |
| | 34 | 42 |
| | 35 | 46 |
| | 36 | 42 |
| ARM/CLUCH/ROTOR COMP | 93 | 1 |
| ARM/CLUCH/ROTOR/Z | 92 | 1 |
| ARM/CLUTCH/1 COMP | 91 | 13 |
| ARM/CLUTCH/2 COMP | 91 | 14 |
| ARM/CLUTCH/3 COMP | 91 | 15 |
| ARM/CLUTCH/4 COMP | 91 | 16 |
| ARM/CLUTCH/8 COMP | 32 | 5 |
| | 32 | 5-A |
| ARM/CLUTCH/AZE COMP | 116 | 51 |
| ARM/CLUTCH/PLANTING | 52 | 12 |
| | 52 | 12-A |
| ARM/CLUTCH/ROTO COMP | 92 | 12 |
| ARM/CLUTCH/SEEDLING | 131 | 56 |
| | 131 | 57 |
| | 131 | 58 |
| ARM/COUNTER/50/ COMP | 108 | 45 |
| ARM/CYLINDER/6D COMP | 48 | 1 |
| ARM/DISCHARGE | 111 | 22 |
| | 113 | 36 |
| | 113 | 36-A |
| | 113 | 72 |
| | 113 | 72-A |
| ARM/DISCHARGE/8 | 111 | 22-A |
| ARM/DRIBVE/8Z COMP | 108 | 59 |
| ARM/DRIVE/D COMP | 108 | 38 |
| ARM/EFLOATSENSE COMP | 99 | 7 |
| | 147 | 8 |
| ARM/FERTILIZEDRIVE | 108 | 68 |
| ARM/HANDLING/8 COMP | 67 | 66 |
| ARM/HANDLING/8Z COMP | 68 | 65 |
| ARM/MOTOR/ROTOR COMP | 95 | 13 |
| | 95 | 13-A |
| ARM/PITMAN/6 | 23 | 22 |
| ARM/PLANTING/A COMP | 20 | 1 |
| ARM/PLANTING/B COMP | 20 | 8 |
| ARM/PUSH-OUT/PZ | 154 | 16 |
| | 155 | 16 |
| ARM/ROTOR | 95 | 22 |
| ARM/ROTOR/CLUCH COMP | 93 | 11 |
| ARM/ROTOR/CLUCH COMP | 93 | 11-A |
| ARM/SEEDLING FEED/8 | 131 | 1 |
| ARM/SEEDLINGTANK | 126 | 21 |
| ARM/SENSOR/ROLLING | 106 | 9 |
| ARM/SLIDER/LOWE COMP | 64 | 12 |
| | 64 | 44 |
| | 67 | 12 |
| | 67 | 44 |
| | 68 | 11 |
| | 68 | 43 |
| ARM/SLIDER/MAIN COMP | 64 | 10 |
| | 67 | 10 |
| | 68 | 9 |
| ARM/SLIDER/MAIN/RH | 64 | 42 |
| | 67 | 42 |
| | 68 | 41 |
| ARM/SLIDER/UPPE COMP | 64 | 11 |
| | 64 | 43 |
| | 67 | 11 |
| | 67 | 43 |
| | 68 | 10 |
| | 68 | 42 |
| ARM/STOPPER/LH COMP | 26 | 46 |
| ARM/STOPPER/RH COMP | 26 | 47 |
| ARM/SWIVEL/INSIDE/LH | 126 | 49 |
| ARM/SWIVEL/OUTSIDE/L | 126 | 50 |
| ARM/TENSION COMP | 4 | 4 |
| ARM/TENSIONER COMP | 116 | 37 |
| ARM/TRUNNION/HMS1/00 | 153 | 12 |
| ARM/TRUNNION/NP | 9 | 1 |
| BACKMIRROR SET | 66 | 1 |
| BALL,STEEL | 19 | 7 |
| | 19 | 13 |
| | 19 | 19 |
| | 100 | 36 |
| | 152 | 8 |
| BALLVALVE/LOCK ASSY | 146 | 3 |
| BAND | 51 | 7 |
| | 82 | 17 |
| | 83 | 17 |
| | 88 | 4 |
| BAND,WIRE/140 | 2 | 42 |
| | 2 | 42-A |
| | 23 | 18 |
| | 47 | 34 |

# Alpabetical Index




| Description | Fig. | Key |
|---|---|---|
| BAND, WIRE/140 | 84 | 4 |
| | 90 | 53 |
| | 109 | 3 |
| | 110 | 10 |
| | 113 | 92 |
| | 118 | 4 |
| BAND, WIRE/170 | 2 | 7 |
| | 2 | 43 |
| | 47 | 33 |
| | 90 | 55 |
| | 146 | 8 |
| BAND, WIRE/250 | 2 | 44 |
| | 37 | 19 |
| | 38 | 20 |
| | 44 | 14 |
| | 47 | 32 |
| | 82 | 35 |
| | 83 | 35 |
| BAND/CLAMP/PUSH | 64 | 23 |
| | 64 | 55 |
| | 67 | 23 |
| | 67 | 55 |
| | 68 | 22 |
| | 68 | 54 |
| BARWEIGHT/11G COMP | 41 | 1 |
| BASE/COOLINGFAN/D | 3 | 4 |
| BASE/COUNTER/NP COMP | 39 | 28 |
| BASE/HANDLING COMP | 67 | 75 |
| | 68 | 74 |
| BASE/MARKER/LH COMP | 122 | 11 |
| | 122 | 11-A |
| BASE/MARKER/RH COMP | 122 | 12 |
| | 122 | 12-A |
| BASE/MOTOR/CLUTCH | 91 | 1 |
| BASE/MOTOR/PLANTING | 52 | 1 |
| BASE/MOTOR/ROTO COMP | 95 | 1 |
| BASE/TENSION/D COMP | 4 | 1 |
| BASE/TOTALCLUTC COMP | 113 | 100 |
| | 113 | 100-A |
| BATTERY(55B24L) ASSY | 85 | 4 |
| BATTERYSTAY COMP | 2 | 12 |
| | 85 | 6 |
| | 118 | 2 |
| BEARING, BALL | 33 | 51 |
| | 34 | 47 |
| BEARING, BALL | 35 | 51 |
| | 36 | 47 |
| BEARING, RB/6000 | 44 | 22 |
| BEARING, RB/6000SS | 126 | 69 |
| BEARING, RB/6001 | 100 | 19 |
| | 100 | 48 |
| BEARING, RB/6002 | 124 | 14 |
| | 125 | 14 |
| BEARING, RB/6002SS | 101 | 5 |
| | 108 | 61 |
| BEARING, RB/6003 | 100 | 38 |
| | 116 | 21 |
| BEARING, RB/6003SS | 153 | 37 |
| BEARING, RB/6004 | 44 | 24 |
| BEARING, RB/6005 | 100 | 50 |
| | 124 | 6 |
| | 125 | 6 |
| BEARING, RB/6006 | 18 | 12 |
| | 100 | 17 |
| BEARING, RB/6006SS | 8 | 19 |
| | 97 | 5 |
| BEARING, RB/6007 | 23 | 2 |
| BEARING, RB/6007SS | 95 | 24 |
| BEARING, RB/6201 | 33 | 23 |
| | 34 | 24 |
| | 35 | 23 |
| | 36 | 24 |
| | 124 | 13 |
| | 125 | 13 |
| BEARING, RB/6202SS | 4 | 5 |
| | 96 | 8 |
| | 96 | 30 |
| BEARING, RB/6203 | 17 | 6 |
| | 23 | 3 |
| | 32 | 2 |
| | 33 | 24 |
| | 34 | 25 |
| | 35 | 24 |
| | 36 | 25 |
| | 96 | 10 |
| | 96 | 16 |
| | 96 | 21 |
| | 96 | 34 |
| | 96 | 37 |
| | 116 | 33 |
| BEARING, RB/6204 | 13 | 2 |
| | 15 | 14 |
| | 17 | 2 |
| | 33 | 29 |
| | 33 | 38 |
| | 34 | 30 |
| | 35 | 29 |
| | 35 | 38 |
| | 36 | 30 |
| | 100 | 10 |
| | 116 | 7 |
| | 116 | 10 |
| | 116 | 13 |
| | 148 | 3 |
| | 148 | 9 |
| | 148 | 15 |
| | 153 | 14 |
| BEARING, RB/6204SS | 31 | 10 |
| BEARING, RB/6205 | 12 | 2 |
| | 18 | 21 |
| | 26 | 5 |
| BEARING, RB/6206 | 14 | 11 |
| | 26 | 42 |
| | 33 | 54 |
| | 34 | 50 |
| | 35 | 32 |
| | 35 | 54 |
| | 36 | 50 |
| BEARING, RB/6207 | 15 | 10 |
| | 16 | 11 |
| | 26 | 25 |
| BEARING, RB/6208 | 33 | 55 |
| | 34 | 51 |
| | 35 | 55 |
| | 36 | 51 |
| BEARING, RB/6209 | 26 | 9 |
| | 26 | 13 |
| BEARING, RB/6302 | 12 | 3 |
| | 18 | 2 |
| BEARING, RB/6303 | 14 | 10 |
| | 17 | 5 |
| | 18 | 9 |
| | 23 | 10 |
| BEARING, RB/6304 | 33 | 32 |
| | 35 | 32-A |

# Alpabetical Index

2233-097-110-10


| Description | Fig. | Key |
|---|---|---|
| BEARING, RB/6305 | 13 | 3 |
| | 18 | 22 |
| | 23 | 11 |
| | 26 | 40 |
| | 34 | 33 |
| | 36 | 33 |
| BEARING, RB/6306 | 15 | 2 |
| BEARING, RB/6306SH2 | 26 | 22 |
| | 26 | 23 |
| BEARING, RB/6903 | 153 | 36 |
| BEARING, RB/6905 | 44 | 25 |
| BEARING/BALL 6205SH2 | 33 | 9 |
| | 34 | 9 |
| | 35 | 9 |
| | 36 | 9 |
| BEARING/BALL/6304SH2 | 33 | 52 |
| | 34 | 48 |
| | 35 | 52 |
| | 36 | 48 |
| BEARING/THRUST | 153 | 13 |
| BEARINGBALL | 156 | 10 |
| BEARINGCOVER | 156 | 11 |
| BELT/PLANT/PZ | 131 | 34 |
| BELT/VC053 | 8 | 23 |
| BLOCK/CYLINDER/23CC | 153 | 3 |
| BLOCK/PORT/HMS1/022 | 153 | 2 |
| BLOWER/FZ/B ASSY | 112 | 24 |
| BOLT | 21 | 3 |
| | 32 | 7 |
| | 89 | 11 |
| | 106 | 2 |
| | 109 | 9 |
| BOLT M6 | 110 | 8 |
| BOLT, S/M6X12 | 64 | 18 |
| | 64 | 49 |
| | 65 | 13 |
| | 67 | 18 |
| | 67 | 49 |
| | 68 | 17 |
| | 68 | 48 |
| | 116 | 39 |
| | 131 | 16 |
| | 131 | 42 |
| BOLT, S/M6X12/7T | 96 | 4 |
| BOLT, S/M6X16 | 33 | 48 |
| BOLT, S/M6X16 | 34 | 44 |
| | 35 | 48 |
| | 36 | 44 |
| | 47 | 17 |
| | 93 | 13 |
| | 126 | 30 |
| | 126 | 40 |
| | 126 | 43 |
| BOLT, S/M6X20 | 129 | 20 |
| BOLT, S/M6X30 | 130 | 20 |
| BOLT, S/M6X30/7T | 152 | 16 |
| BOLT, S/M6X35 | 47 | 15 |
| BOLT, S/M8X16 | 23 | 21 |
| | 37 | 14 |
| | 116 | 36 |
| | 149 | 19 |
| BOLT, S/M8X20 | 1 | 19 |
| | 2 | 11 |
| | 2 | 45 |
| | 37 | 4 |
| | 38 | 4 |
| | 46 | 4 |
| | 47 | 3 |
| | 50 | 4 |
| | 51 | 3 |
| BOLT, S/M8X20/7T | 26 | 33 |
| BOLT, S/M8X25 | 3 | 2 |
| | 8 | 18 |
| | 33 | 27 |
| | 34 | 28 |
| | 35 | 27 |
| | 36 | 28 |
| | 53 | 18 |
| | 100 | 3 |
| | 129 | 31 |
| BOLT, S/M8X25/7T | 16 | 8 |
| | 92 | 7 |
| | 93 | 7 |
| | 108 | 69 |
| BOLT, S/M8X30 | 8 | 14 |
| BOLT, S/M8X30/7T | 11 | 3 |
| | 26 | 45 |
| | 44 | 3 |
| | 69 | 2 |
| | 69 | 6 |
| BOLT, S/M8X30/7T | 70 | 2 |
| | 70 | 6 |
| | 71 | 2 |
| | 71 | 6 |
| | 72 | 2 |
| BOLT, S/M8X35/7T | 11 | 16 |
| | 69 | 3 |
| | 69 | 7 |
| | 70 | 3 |
| | 70 | 7 |
| | 71 | 3 |
| | 71 | 7 |
| | 72 | 3 |
| BOLT, S/M8X45/7T | 33 | 5 |
| | 34 | 5 |
| | 35 | 5 |
| | 36 | 5 |
| BOLT, S/M8X55 | 15 | 18 |
| | 53 | 8 |
| BOLT, SP/M10X20 | 68 | 34 |
| | 119 | 13 |
| BOLT, SP/M10X25 | 60 | 18 |
| | 61 | 18 |
| | 64 | 2 |
| | 64 | 34 |
| | 67 | 2 |
| | 67 | 34 |
| BOLT, SP/M6X12 | 2 | 38 |
| | 95 | 41 |
| | 107 | 4 |
| | 126 | 68 |
| BOLT, SP/M6X16 | 9 | 21-A |
| | 10 | 12 |
| | 37 | 17 |
| | 38 | 18 |
| | 56 | 8 |
| | 79 | 43 |
| | 80 | 42 |
| | 80 | 48 |
| | 81 | 43 |
| | 100 | 56 |
| | 130 | 35 |
| BOLT, SP/M6X20 | 9 | 8 |
| | 82 | 18 |
| | 82 | 26 |

# Alpabetical Index




| Description | Fig. | Key |
|---|---|---|
| BOLT, SP/M6X20 | 83 | 18 |
| | 83 | 26 |
| | 90 | 13 |
| | 90 | 16 |
| | 90 | 23 |
| | 126 | 61 |
| | 126 | 63 |
| | 126 | 67 |
| | 130 | 16 |
| | 130 | 22 |
| | 130 | 30 |
| | 131 | 17 |
| | 131 | 51 |
| BOLT, SP/M6X25 | 90 | 14 |
| | 126 | 36 |
| | 130 | 37 |
| BOLT, SP/M6X30 | 86 | 2 |
| | 87 | 2 |
| | 100 | 54 |
| | 130 | 9 |
| | 130 | 18 |
| | 130 | 24 |
| | 130 | 40 |
| | 130 | 43 |
| BOLT, SP/M6X40 | 87 | 3 |
| BOLT, SP/M8X16 | 89 | 17 |
| | 90 | 40 |
| | 91 | 21 |
| | 91 | 35 |
| BOLT, SP/M8X20 | 6 | 9 |
| | 6 | 13 |
| | 6 | 25 |
| | 7 | 7 |
| | 20 | 14 |
| | 22 | 6 |
| | 31 | 12 |
| | 33 | 67 |
| | 35 | 70 |
| | 39 | 13 |
| | 39 | 29 |
| | 40 | 2 |
| | 42 | 2 |
| | 43 | 2 |
| | 52 | 3 |
| | 60 | 7 |
| BOLT, SP/M8X20 | 61 | 7 |
| | 62 | 6 |
| | 62 | 8 |
| | 63 | 3 |
| | 63 | 6 |
| | 63 | 15 |
| | 66 | 12 |
| | 74 | 3 |
| | 74 | 14 |
| | 75 | 3 |
| | 75 | 14 |
| | 89 | 3 |
| | 89 | 5 |
| | 89 | 20 |
| | 94 | 8 |
| | 95 | 3 |
| | 95 | 29 |
| | 95 | 32 |
| | 100 | 58 |
| | 103 | 3 |
| | 104 | 3 |
| | 104 | 6 |
| | 112 | 11 |
| | 116 | 48 |
| | 119 | 8 |
| | 119 | 16 |
| | 119 | 22 |
| | 119 | 23 |
| | 120 | 3 |
| | 120 | 6 |
| | 121 | 3 |
| | 121 | 11 |
| | 121 | 18 |
| | 122 | 13 |
| | 127 | 8 |
| | 129 | 27 |
| | 129 | 29 |
| | 149 | 15 |
| BOLT, SP/M8X25 | 60 | 3 |
| | 61 | 3 |
| | 65 | 21 |
| | 103 | 7 |
| | 119 | 9 |
| | 126 | 22 |
| | 126 | 53 |
| BOLT, SP/M8X25 | 146 | 11 |
| | 149 | 4 |
| BOLT, SP/M8X30 | 149 | 7 |
| BOLT, SP/M8X45 | 91 | 2 |
| BOLT, SUS/M6X12 | 1 | 16 |
| BOLT, SUS/M6X16 | 115 | 29 |
| | 121 | 20 |
| BOLT, SUS/M6X30 | 154 | 23 |
| | 155 | 23 |
| BOLT, SUS/M8X12 | 108 | 3 |
| BOLT, SUS/M8X30 | 115 | 22 |
| BOLT/10X16/PQ | 19 | 4 |
| | 19 | 10 |
| BOLT/FAN | 8 | 15 |
| BOLT/FOOD/NP | 89 | 1 |
| BOLT/FRANGE/M10X25 | 26 | 36 |
| BOLT/HANDLE/LOWER | 126 | 54 |
| BOLT/JOINT | 101 | 17 |
| BOLT/KNOB/M06X13 | 88 | 7 |
| | 88 | 7-A |
| | 130 | 14 |
| | 130 | 14-A |
| BOLT/KNOB/M08X20 | 89 | 7 |
| BOLT/M10X12 | 100 | 34 |
| BOLT/M10X140 | 8 | 4 |
| BOLT/M10X20 | 111 | 8 |
| BOLT/M10X22/9T, P1.25 | 1 | 3 |
| BOLT/M10X25 | 97 | 4 |
| BOLT/M10X25/7T | 26 | 18 |
| BOLT/M10X25/9T, P1.25 | 3 | 6 |
| | 4 | 2 |
| BOLT/M10X30/7T | 60 | 16 |
| | 61 | 16 |
| BOLT/M10X30/7T/G | 97 | 6 |
| BOLT/M10X35/7T | 23 | 23 |
| BOLT/M10X35/S | 26 | 3 |
| | 26 | 48 |
| BOLT/M10X40/7T, SEAL | 33 | 60 |
| | 35 | 59 |
| | 36 | 55 |
| BOLT/M10X75 | 8 | 5 |
| BOLT/M12X25/7T | 27 | 2 |
| BOLT/M12X45 | 22 | 3 |
| BOLT/M4X14/SUS | 157 | 20 |
| | 158 | 18 |

# Alpabetical Index




| Description | Fig. | Key |
|---|---|---|
| BOLT/M4X14/SUS | 159 | 20 |
| | 160 | 18 |
| BOLT/M4X20/SUS | 157 | 19 |
| | 158 | 17 |
| | 159 | 19 |
| | 160 | 17 |
| BOLT/M5X12/SP/STAINL | 129 | 41 |
| BOLT/M6X10 | 90 | 35 |
| | 90 | 50 |
| BOLT/M6X12 | 88 | 9 |
| | 90 | 33 |
| | 131 | 9 |
| | 131 | 49 |
| BOLT/M6X16 | 90 | 3 |
| | 110 | 3 |
| | 112 | 44 |
| | 154 | 19 |
| | 155 | 19 |
| BOLT/M6X16/SP/SUS | 111 | 16 |
| BOLT/M6X16X16 | 64 | 25 |
| | 64 | 31 |
| | 64 | 57 |
| | 64 | 63 |
| | 65 | 4 |
| | 65 | 10 |
| | 67 | 25 |
| | 67 | 31 |
| | 67 | 57 |
| | 67 | 79 |
| | 68 | 24 |
| | 68 | 30 |
| | 68 | 56 |
| | 68 | 78 |
| | 79 | 27 |
| | 80 | 26 |
| | 81 | 27 |
| BOLT/M6X2 | 112 | 27 |
| BOLT/M6X20 | 6 | 26 |
| | 67 | 70 |
| | 68 | 69 |
| BOLT/M6X25 | 6 | 27 |
| | 126 | 37 |
| BOLT/M6X35 | 131 | 14 |
| | 131 | 47 |
| | 131 | 77 |
| BOLT/M6X40 | 82 | 31 |
| | 83 | 31 |
| | 131 | 48 |
| | 131 | 78 |
| BOLT/M8X110 | 11 | 4 |
| BOLT/M8X12 | 11 | 11 |
| BOLT/M8X16/7T | 4 | 7 |
| | 44 | 8 |
| BOLT/M8X160 | 11 | 17 |
| BOLT/M8X20/SP/S | 154 | 22 |
| | 155 | 22 |
| BOLT/M8X25 | 41 | 2 |
| | 146 | 9 |
| BOLT/M8X30 | 74 | 16 |
| | 75 | 16 |
| BOLT/M8X35 | 95 | 36 |
| BOLT/M8X35/7T | 23 | 8 |
| BOLT/M8X40 | 77 | 4 |
| | 129 | 8 |
| BOLT/M8X45 | 149 | 10 |
| BOLT/M8X50 | 9 | 2 |
| | 39 | 4 |
| BOLT/M8X70 | 76 | 2 |
| BOLT/M8X80 | 79 | 2 |
| | 80 | 2 |
| | 81 | 2 |
| BOLT/M8X80/7T | 38 | 14 |
| BOLT/M8X90 | 95 | 18 |
| | 100 | 7 |
| | 101 | 6 |
| | 102 | 6 |
| | 116 | 3 |
| | 119 | 5 |
| BOLT/MOTOR/M4X16 | 44 | 16 |
| BOLT/REAMER/M10X30 | 54 | 5 |
| BOLT/S/M6X16/G | 101 | 12 |
| BOLT/S/M8X16/G | 116 | 28 |
| BOLT/SEAL/M10X25/S | 3 | 5 |
| | 29 | 3 |
| BOLT/SEAL/M10X25/S/G | 98 | 3 |
| BOLT/SEAL/M10X30/S | 29 | 2 |
| | 33 | 59 |
| | 34 | 55 |
| | 35 | 60 |
| | 36 | 56 |
| BOLT/SEAL/M10X30/S | 54 | 4 |
| BOLT/SEAL/M10X30/S/G | 98 | 3-A |
| BOLT/SEAL/M12X35 | 33 | 57 |
| | 34 | 53 |
| | 35 | 57 |
| | 36 | 53 |
| BOLT/SEAL/M8X16/S | 14 | 13 |
| | 15 | 27 |
| | 18 | 32 |
| BOLT/SHAFT/DIFF | 16 | 4 |
| BOLT/SHIFT/PLANTING/ | 19 | 16 |
| BOLT/SP | 82 | 27 |
| | 83 | 27 |
| BOLT/SP/M10X25/G | 99 | 2 |
| | 147 | 23 |
| BOLT/SP/M6X20/G | 108 | 58 |
| | 109 | 24 |
| | 111 | 9 |
| | 111 | 21 |
| | 111 | 33 |
| | 111 | 38 |
| | 112 | 23 |
| | 112 | 40 |
| | 113 | 86 |
| BOLT/SP/M8X20/G | 95 | 21 |
| | 108 | 15 |
| | 111 | 42 |
| | 111 | 49 |
| | 112 | 18 |
| BOLT/SP/M8X25/SUS FA | 58 | 13 |
| | 59 | 13 |
| | 62 | 2 |
| BOLT/SPM6X55/G | 108 | 2 |
| | 112 | 22 |
| | 113 | 73 |
| BOOT | 79 | 37 |
| | 80 | 36 |
| | 81 | 37 |
| | 109 | 19 |
| BOOT,DRIVE SHAFT | 30 | 4 |
| BOOT/CAM/LEAD | 101 | 14 |
| BOOT/DISCHARGE/C | 111 | 13 |
| BOOT/DISCHARGE/RH | 111 | 12 |
| BOOT/SEEDLING FEED C | 131 | 61 |
| BOOT/SHAFT | 31 | 3 |

# Alpabetical Index




| Description | Fig. | Key |
|---|---|---|
| BOOT/STEARING/Z | 79 | 33 |
| BOOTS/ROTOR/DRIVE | 92 | 8 |
| | 93 | 8 |
| BOSS,EXTENSION MARKE | 77 | 8 |
| BRACKET,FUSE | 88 | 8 |
| | 90 | 32 |
| BRACKET/ENGINE/A | 1 | 1 |
| BRACKET/ENGINE/B | 1 | 2 |
| BRACKET/RESERVE TANK | 2 | 37 |
| BRACKET/ROLLING/8 | 98 | 2 |
| | 98 | 2-A |
| BRACKET/SEAT/PZ/8 | 63 | 2 |
| BRAKE/8 ASSY | 14 | 7 |
| BRAKE/NP/D ASSY | 15 | 11 |
| BRAKE/SLIPPERS/B | 6 | 15 |
| B-RIVET/ALMI | 126 | 12 |
| BRUSH | 143 | 2 |
| BUCKET/FERTILIZE | 67 | 78 |
| | 68 | 77 |
| BULB/12V 20W | 127 | 2 |
| BULB/12V18W | 78 | 2 |
| BUMPER/NP COMP | 42 | 1 |
| BUMPER/NP/Z COMP | 43 | 1 |
| BURUSH COMP | 113 | 7 |
| | 113 | 7-A |
| | 113 | 43 |
| | 113 | 43-A |
| BUSH | 48 | 2 |
| BUSH,COLUMN | 37 | 2 |
| | 38 | 2 |
| BUSH,EXHAUST LEVER | 113 | 32 |
| | 113 | 68 |
| BUSH,GEAR | 113 | 22 |
| | 113 | 58 |
| BUSH,SEEDING OUT | 131 | 23 |
| | 131 | 74 |
| BUSH,SEEDLING | 113 | 84 |
| | 118 | 11 |
| | 131 | 21 |
| | 131 | 46 |
| BUSH,SEEDLING,FEED | 131 | 71 |
| BUSH/08X18X36 | 154 | 4 |
| | 155 | 4 |
| BUSH/10X12X06 | 108 | 30 |
| BUSH/10X12X10 | 91 | 19 |
| BUSH/10X12X20 | 108 | 25 |
| BUSH/10X13X10 | 108 | 26 |
| | 108 | 39 |
| | 108 | 49 |
| BUSH/12X14X10 | 44 | 32 |
| BUSH/12X15X20 | 15 | 9 |
| | 91 | 6 |
| BUSH/12X16X24 | 102 | 4 |
| BUSH/14X16X20 | 113 | 78 |
| BUSH/15X17X10 | 44 | 33 |
| BUSH/15X17X16 | 39 | 8 |
| | 40 | 4 |
| BUSH/15X17X25 | 52 | 2 |
| | 64 | 13 |
| | 64 | 45 |
| | 67 | 13 |
| | 67 | 45 |
| | 68 | 12 |
| | 68 | 44 |
| | 95 | 2 |
| BUSH/15X18X25 | 91 | 10 |
| BUSH/17X19X15 | 9 | 29 |
| | 116 | 19 |
| BUSH/17X28X19 | 113 | 17 |
| | 113 | 26 |
| | 113 | 53 |
| | 113 | 62 |
| BUSH/18X21X25 | 46 | 2 |
| | 50 | 2 |
| | 97 | 2 |
| BUSH/19X35X20 | 37 | 3 |
| | 38 | 3 |
| BUSH/20X23X25 | 14 | 3 |
| BUSH/22X26X25 | 101 | 9 |
| BUSH/25X28X35 | 15 | 25 |
| BUSH/68X71X14 | 153 | 17 |
| BUSH/95X100X22 | 153 | 16 |
| BUSH/DISCHARGELEVER | 113 | 32-A |
| | 113 | 68-A |
| BUSH/F/10X12X15 | 7 | 9 |
| | 9 | 19 |
| BUSH/GEAR | 113 | 13 |
| | 113 | 49 |
| BUSH/HOLDER/CLUTCH/C | 131 | 40 |
| BUSH/HOLDER/CLUTCH/N | 131 | 38 |
| BUSH/ROTOR/M. | 94 | 21 |
| BUSH/SEEDLING FEED/C | 131 | 22 |
| BUSH/SEEDLINGFEED/20 | 131 | 12 |
| BUSHPUSHNUT/08 | 20 | 15 |
| BUZZER | 79 | 39 |
| | 80 | 38 |
| | 81 | 39 |
| BUZZERASSY | 79 | 45 |
| | 80 | 44 |
| | 81 | 45 |
| CABLE/ACCELERATOR/D/ | 10 | 1 |
| CABLE/BRAKE/LH/NP | 40 | 21 |
| | 40 | 21-A |
| CABLE/BRAKE/RH/NP | 40 | 22 |
| | 40 | 22-A |
| CABLE/CLUCH/FERTILIZ | 33 | 65 |
| | 35 | 68 |
| CABLE/FERTILIZE/8CL | 113 | 97 |
| CABLE/FERTILIZE/8CR | 113 | 98 |
| CABLE/FERTILIZE/8L | 113 | 96 |
| CABLE/FERTILIZE/8R | 113 | 99 |
| CABLE/FLOAT/7 | 121 | 17 |
| CABLE/GNSS ASSY | 89 | 25 |
| CABLE/HOPPER/NP/F | 157 | 6 |
| | 158 | 6 |
| | 159 | 6 |
| | 160 | 6 |
| CABLE/HST/FORWARD/8 | 9 | 32 |
| | 9 | 32-A |
| CABLE/HST/REVERSE/8 | 9 | 34 |
| | 9 | 34-A |
| CABLE/RIDGE CLUTCH 2 | 91 | 26-A |
| CABLE/RIDGE CLUTCH/8 | 91 | 25 |
| | 91 | 26 |
| | 91 | 27 |
| | 91 | 28 |
| CABLE/ROTOR/CLUCH | 93 | 14 |
| CABLE/SEEDLING FEED | 131 | 62 |
| | 131 | 63 |
| | 131 | 64 |
| | 131 | 64-A |
| | 131 | 65 |
| | 131 | 80 |
| CAM/CHANGE/NP COMP | 7 | 8 |
| CAM/HST/D/NP COMP | 6 | 11 |

# Alpabetical Index

2233-097-110-10


| Description | Fig. | Key |
|---|---|---|
| CAM/HST/FRONT/NP | 6 | 23 |
| CAM/HST/REAR | 6 | 24 |
| CAM/LEAD | 101 | 1-A |
| CAM/LEAD/NP8 | 101 | 1 |
| CAM/PUSHED OUT/LH | 154 | 28 |
| CAM/PUSHED OUT/RH | 155 | 28 |
| CAM/RETURN/LEVE COMP | 39 | 7 |
| CAM/SEND/8 COMP | 102 | 1 |
| CAM/STOPSWITCH | 133 | 3 |
| CAP | 2 | 28 |
| | 37 | 11 |
| | 38 | 11 |
| | 74 | 9 |
| | 75 | 9 |
| | 77 | 7 |
| | 113 | 104 |
| | 115 | 33 |
| CAP,DUCT/EXHAUST | 111 | 18 |
| CAP,OIL/30 | 11 | 7 |
| | 11 | 7-A |
| CAP,SEEDLING FRAME/P | 67 | 77 |
| | 68 | 76 |
| CAP,SHUTTER | 111 | 3 |
| CAP/08 | 74 | 12 |
| | 75 | 12 |
| CAP/10 | 45 | 7 |
| | 124 | 18 |
| | 125 | 18 |
| | 126 | 24 |
| CAP/20X40 | 67 | 62 |
| | 68 | 61 |
| CAP/22X15 | 119 | 11 |
| CAP/24X18 | 89 | 14 |
| | 103 | 4 |
| CAP/30X20 | 64 | 8 |
| | 64 | 32 |
| | 64 | 40 |
| | 64 | 64 |
| | 67 | 8 |
| | 67 | 32 |
| | 67 | 40 |
| | 68 | 7 |
| | 68 | 31 |
| | 68 | 39 |
| CAP/35 | 116 | 24 |
| CAP/35 | 148 | 18 |
| CAP/BUMPER | 42 | 3 |
| | 43 | 3 |
| CAP/COVER/COLUMN/NP | 80 | 32 |
| | 81 | 33 |
| CAP/D6/YELLOW | 76 | 4 |
| CAP/FERTILIZECLUTCH | 113 | 91 |
| CAP/FRONTWHEEL/650 | 28 | 1 |
| CAP/FUSE BOX | 82 | 6 |
| | 83 | 6 |
| CAP/GREEN/8 | 20 | 4 |
| CAP/SWITCH | 6 | 2 |
| | 79 | 50 |
| CAP/TANK/NONLEA ASSY | 5 | 6 |
| CAP/YELLOW/10/KNOB | 154 | 17 |
| | 155 | 17 |
| CAPSULE/LOWER/NP | 113 | 2-A |
| | 113 | 38-A |
| CAPSULE/LOWER/PZN | 113 | 2 |
| | 113 | 38 |
| CAPSULE/UPPER/PZN | 113 | 1 |
| | 113 | 37 |
| CARTRIDGE | 47 | 4 |
| CASE | 156 | 1 |
| CASE/CENTERROTOR/LH | 96 | 1 |
| | 96 | 2 |
| CASE/CENTERROTOR/RH | 96 | 25 |
| | 96 | 26 |
| CASE/FINAL/LOWER/D | 26 | 20 |
| CASE/FINAL/UPPER | 26 | 1 |
| CASE/HMS1/022 | 153 | 1 |
| CASE/HMS1/027 | 153 | 1-A |
| CASE/LOWER/STEARING | 44 | 1 |
| CASE/REAR/IN/LH | 33 | 1 |
| | 34 | 1 |
| | 35 | 1 |
| | 35 | 1-A |
| | 36 | 1 |
| | 36 | 1-A |
| CASE/REAR/IN/RH | 33 | 2 |
| | 34 | 2 |
| | 35 | 2 |
| | 36 | 2 |
| CASE/REAR/OUT/8D | 33 | 4 |
| | 34 | 4 |
| CASE/REAR/OUT/8D | 35 | 4 |
| | 36 | 4 |
| CASE/RELAY COMP | 88 | 3 |
| | 88 | 3-A |
| CASE/ROTARY/IN/LH | 124 | 3 |
| CASE/ROTARY/IN/RH | 125 | 3 |
| CASE/ROTARY/OUT/LH | 124 | 2 |
| CASE/ROTARY/OUT/RH | 125 | 2 |
| CASE/SEND/LH | 100 | 1 |
| | 100 | 1-A |
| | 100 | 2 |
| CASE/SUPPORTFRAME/8 | 116 | 1 |
| CASE/SUTTER | 111 | 2 |
| CASE/TRANSMISSION/LH | 11 | 1 |
| CASE/TRANSMISSION/RH | 11 | 2 |
| CASE/UPPER/STEARING | 44 | 2 |
| CASING/IN/FZ | 112 | 30 |
| CASING/OUT/FZ | 112 | 31 |
| CATCH/LEAD | 101 | 10 |
| CHAIN/ROLLER/41X034 | 33 | 20 |
| | 34 | 21 |
| | 35 | 20 |
| | 36 | 21 |
| CHAIN/ROLLER/60 | 116 | 25 |
| CLAMP | 2 | 33 |
| | 129 | 19 |
| CLAMP,HARNESS | 78 | 5 |
| | 98 | 4 |
| | 126 | 47 |
| CLAMP,SPRING/4 | 115 | 5 |
| CLAMP,WINKER B | 90 | 19 |
| | 90 | 49 |
| CLAMP/WIRE/38-46 | 2 | 17 |
| CLAMP/WIRE/49-60 | 2 | 25 |
| CLAMP/WORM/16-25 | 47 | 27 |
| CLAMP/WORM/20-32 | 47 | 6 |
| CLAMP/WORM/23-35 | 2 | 16 |
| CLAMP/WORM/32-50 | 101 | 15 |
| CLAMP/WORM/45-60 | 101 | 16 |
| CLEANER/AIR ASSY | 2 | 19 |
| CLIP | 2 | 23 |
| CLIP,MAT/SUNSET GRAY | 33 | 69 |
| | 35 | 72 |
| CLIP,STEP MAT | 58 | 6 |
| | 58 | 18 |

| Description | Fig. | Key |
|---|---|---|
| CLIP,STEP MAT | 59 | 6 |
| | 59 | 18 |
| | 62 | 4 |
| | 64 | 9 |
| | 64 | 41 |
| | 67 | 9 |
| | 67 | 41 |
| | 68 | 8 |
| | 68 | 40 |
| CLIP/HOSE/10.4-11.1 | 11 | 24 |
| CLIP/HOSE/11.1-12.0 | 5 | 21 |
| CLIP/HOSE/11.9-12.6 | 5 | 19 |
| | 47 | 23 |
| CLIP/HOSE/12.6-13.4 | 5 | 12 |
| CLUCH/PLANTER/DRIVE | 18 | 27 |
| CLUTCH | 131 | 26 |
| | 131 | 72 |
| CLUTCH,ROLLER/FC-25 | 108 | 53 |
| CLUTCH/DIFFLOCK | 16 | 16 |
| CLUTCH/DRIVE | 33 | 14 |
| | 34 | 14 |
| | 35 | 14 |
| | 36 | 14 |
| CLUTCH/DRIVEN/FERTIL | 33 | 31 |
| | 35 | 31 |
| | 35 | 31-A |
| CLUTCH/HST/NP COMP | 9 | 25 |
| CLUTCH/NP8 ASSY | 15 | 5 |
| | 15 | 5-A |
| CLUTCH/PLANTING | 18 | 26 |
| CLUTCH/SEEDLING FEED | 131 | 59 |
| CLUTCHFULCRUM | 113 | 85 |
| COCK ASSY | 2 | 3 |
| COLLAR | 152 | 3 |
| COLLAR SLIDE METAL | 129 | 30 |
| COLLAR, CARRIER | 100 | 22 |
| COLLAR/08X12X05) | 116 | 50 |
| COLLAR/09X12X09 | 9 | 38 |
| COLLAR/09X12X57 | 79 | 5 |
| | 80 | 5 |
| | 81 | 5 |
| COLLAR/10X12X14 | 53 | 5 |
| COLLAR/10X14X8 | 91 | 17 |
| COLLAR/11X25X5 | 26 | 35 |
| COLLAR/12X16X24 | 95 | 33 |
| COLLAR/13X18X17 | 131 | 43 |
| COLLAR/17X22X20 | 7 | 25 |
| COLLAR/17X25X08 | 116 | 32 |
| COLLAR/18X22X12 | 96 | 24 |
| COLLAR/20X25X21 | 15 | 4 |
| COLLAR/20X25X3.2 | 33 | 18 |
| | 34 | 18 |
| | 35 | 18 |
| | 36 | 18 |
| COLLAR/28X35X02 | 33 | 16 |
| | 34 | 16 |
| | 35 | 16 |
| | 36 | 16 |
| COLLAR/32X43X21 | 26 | 38 |
| COLLAR/35X45X6 | 15 | 8 |
| COLLAR/60X70X08 | 26 | 26 |
| COLLAR/CHECK | 152 | 6 |
| COLLAR/CLUTCH | 33 | 17 |
| | 34 | 17 |
| | 35 | 17 |
| | 36 | 17 |
| COLLAR/ROTOR/SIDE | 94 | 22 |
| COLLAR/SPRING | 26 | 31 |
| COLLER/47X3 | 113 | 20 |
| | 113 | 56 |
| COLOR/21X27X18 | 18 | 14 |
| COLOR/21X27X23 | 18 | 17 |
| COLUMN/LOWER/8/NP | 37 | 13 |
| COLUMN/LOWER/PNP/Z | 38 | 13 |
| COLUMN/UPPER/NP COMP | 37 | 1 |
| | 37 | 1-A |
| | 38 | 1 |
| CONNECTOR | 11 | 9 |
| CONNECTOR/MINIHALF | 11 | 21 |
| CONTROLLER/8/REAR | 88 | 1 |
| | 88 | 1-A |
| CONTROLLER/8E/FRONT | 86 | 1 |
| | 86 | 1-A |
| | 86 | 1-B |
| | 86 | 1-C |
| CONTROLLER/8ZE/FRONT | 87 | 1 |
| CONTROLLER/MOTO ASSY | 82 | 25 |
| | 83 | 25 |
| CONTROLLER/STRAIGHT | 90 | 15 |
| CORRUGATED TUBE/07X0 | 90 | 25 |
| CORRUGATED TUBE/07X0 | 92 | 28 |
| CORRUGATED TUBE/07X1 | 79 | 38 |
| | 80 | 37 |
| | 81 | 38 |
| | 90 | 24 |
| CORRUGATED TUBE/10X6 | 131 | 66 |
| CORRUGATED TUBE/10X7 | 131 | 67 |
| CORRUGATED TUBE/13X1 | 90 | 26 |
| CORRUGATETUBE/28X120 | 2 | 15 |
| COUPLING/DRAIVE | 101 | 2 |
| | 117 | 1 |
| COUPLING/PUMP | 45 | 6 |
| COVER ASSY | 2 | 20 |
| COVER,METAL | 23 | 5 |
| COVER,ROD | 152 | 12 |
| COVER,SEEDING TANK/M | 126 | 9 |
| COVER/BATTERY/D/NP | 85 | 5 |
| COVER/BRAKE/NP | 15 | 6 |
| COVER/CASE/ROTOR | 96 | 3 |
| COVER/CLUTCH/FERTILI | 33 | 66 |
| | 35 | 69 |
| COVER/COIL/M | 94 | 5 |
| | 94 | 14 |
| COVER/COLUMN/FRONT/N | 79 | 28 |
| | 80 | 27 |
| | 81 | 28 |
| COVER/COLUMN/LOWER/N | 79 | 32 |
| | 80 | 31 |
| | 81 | 32 |
| COVER/COLUMN/REAR/NP | 80 | 28 |
| | 81 | 29 |
| COVER/COLUMN/REAR/Z/ | 79 | 29 |
| COVER/CONTROLLER/Z | 55 | 8 |
| | 56 | 10 |
| COVER/DICTHER/NP | 109 | 5 |
| COVER/DUCT/LOWER | 112 | 43 |
| COVER/DUCT/UPPER/8 | 112 | 42 |
| COVER/ENGINE/D/NP | 63 | 1 |
| COVER/EXAUST/NP8 | 1 | 15 |
| | 1 | 15-A |
| COVER/FAINAL/FRONT/D | 26 | 43 |
| COVER/FERTIRIZE CLUT | 33 | 68 |
| | 35 | 71 |
| COVER/FRAME | 116 | 26 |
| COVER/FRONT/UPPER | 26 | 16 |

# Alpabetical Index

2233-097-110-10


| Description | Fig. | Key |
|---|---|---|
| COVER/GNSS | 89 | 28 |
| COVER/HOPPER/4 ASSY | 157 | 3 |
| | 158 | 3 |
| | 158 | 3-A |
| | 160 | 3 |
| COVER/HOPPER/4/LH | 157 | 3-A |
| | 159 | 3 |
| COVER/HOPPER/NP80 | 151 | 1 |
| COVER/MARKER/LH | 122 | 25 |
| | 122 | 25-A |
| COVER/MARKER/RH | 122 | 26 |
| | 122 | 26-A |
| COVER/MOTOR | 44 | 13 |
| | 122 | 22 |
| COVER/MOTOR/NP | 64 | 14 |
| | 64 | 46 |
| | 67 | 14 |
| | 67 | 46 |
| | 68 | 13 |
| | 68 | 45 |
| COVER/MOTOR/PLANTING | 52 | 11 |
| COVER/PLANTING/PZ/E | 154 | 2 |
| | 155 | 2 |
| COVER/PLANTINGCLUTCH | 11 | 15 |
| COVER/RADIATOR/LH | 2 | 39-A |
| COVER/RADIATOR/RH | 2 | 39 |
| | 2 | 41 |
| COVER/RADIATOR/UPPER | 2 | 46 |
| COVER/REAR/INPUT | 33 | 26 |
| | 34 | 27 |
| | 35 | 26 |
| | 36 | 27 |
| COVER/RELAY | 88 | 6 |
| COVER/RIDGECLUTCH | 91 | 34 |
| COVER/ROTASWITCH | 92 | 29 |
| COVER/ROTOR/8A/GUARD | 149 | 22 |
| COVER/ROTOR/8E/LH | 95 | 39 |
| COVER/ROTOR/8E/RH | 95 | 40 |
| COVER/ROTOR/8L/GUARD | 149 | 20 |
| COVER/ROTOR/8R/GUARD | 149 | 21 |
| COVER/SEEDLING TANK/ | 126 | 17 |
| CUSHION | 130 | 44 |
| | 154 | 10 |
| | 155 | 10 |
| CUSHION, SEAT | 63 | 13 |
| CUSHION, SENSOR/WASHE | 82 | 30 |
| | 83 | 30 |
| CUSHION/ARM/PZ | 154 | 26 |
| | 155 | 26 |
| CUSHION/HOOD | 55 | 2 |
| | 56 | 2 |
| CUSHION/SEAT/NP | 73 | 8 |
| CYLINDER/8 COMP | 46 | 1 |
| | 46 | 1-A |
| DICTHER/NP | 115 | 19 |
| DISC | 156 | 6 |
| DRIVER/MOTOR/ASIST | 90 | 12 |
| DUCT/DISCHARGE | 111 | 14 |
| DUCTHOSE/REAR/5 | 112 | 37 |
| DUCTHOSE/REAR/8 | 112 | 39 |
| ELEMENT ASSY | 2 | 21 |
| FAN | 112 | 32 |
| FAN/HST | 8 | 21 |
| FENCE/LH/SUB COMP | 126 | 8 |
| FENCE/OUTER/LH COMP | 126 | 16 |
| FILTER, FUEL | 5 | 15 |
| FILTER/FUEL | 5 | 9 |
| FILTER/LINE/09X12X15 | 53 | 4 |
| FILTER/PORT/11 | 53 | 10 |
| FINGER/14/G | 154 | 18 |
| | 155 | 18 |
| FLANGEBOLT | 2 | 5 |
| FLANGEUNUT/M12X1.25 | 37 | 12-A |
| | 38 | 12 |
| FLAT SPRING | 66 | 11 |
| FLOAT/CENTER/6 | 104 | 1 |
| FLOAT/SIDE/LH | 121 | 8 |
| FLOAT/SIDE/NP | 121 | 1 |
| FLOAT/SIDE/RH | 121 | 9 |
| FORK/CLUTCH/LH/ COMP | 113 | 87-A |
| FORK/CLUTCH/RH/Z | 113 | 88-A |
| FORK/CULTCH/LH/ COMP | 113 | 87 |
| FORK/CULTCH/RH/ COMP | 113 | 88 |
| FRAME, SEEDLING | 64 | 30 |
| | 64 | 62 |
| | 65 | 3 |
| | 65 | 9 |
| | 67 | 30 |
| | 68 | 29 |
| FRAME/6/PZ | 130 | 2 |
| FRAME/8/NP COMP | 112 | 1 |
| FRAME/DEPTH/8 COMP | 103 | 1 |
| FRAME/HANDRAIL/F/LH/ | 74 | 1 |
| | 74 | 1-A |
| | 74 | 1-B |
| FRAME/HANDRAIL/F/RH/ | 74 | 2 |
| | 74 | 2-A |
| FRAME/HANDRAIL/LH/AS | 75 | 1 |
| | 75 | 1-A |
| FRAME/HANDRAIL/RH/AS | 75 | 2 |
| | 75 | 2-A |
| FRAME/LOWER/8/E16 | 119 | 15 |
| FRAME/MAIN/D/E1 COMP | 29 | 1 |
| | 29 | 1-A |
| | 29 | 1-B |
| FRAME/REAR/8/NP COMP | 62 | 5 |
| FRAME/ROTOR HEIGHT/8 | 95 | 16 |
| | 95 | 16-A |
| FRAME/UPPER/8 COMP | 119 | 12 |
| FROK/PLANT COMP | 154 | 7 |
| | 155 | 7 |
| FRONT PLATE/SIDE/LH | 129 | 3 |
| FRONT PLATE/SIDE/RH | 129 | 4 |
| FRONT/DIFFCASE | 16 | 1 |
| | 16 | 1-A |
| FUN/COOLING/NP | 3 | 3 |
| FUSE/BLADE/32V05A | 82 | 3 |
| | 83 | 3 |
| | 90 | 30 |
| FUSE/BLADE/32V10A | 82 | 4 |
| | 83 | 4 |
| | 90 | 29 |
| FUSE/BLADE/32V20A | 82 | 5 |
| | 83 | 5 |
| | 90 | 31 |
| FUSE/SLOW BLOW/40A | 82 | 8 |
| | 83 | 8 |
| FUSE/SLOW BLOW/50A | 82 | 15 |
| | 83 | 15 |
| FUSE/SLOW BLOW/60A | 82 | 14 |
| | 83 | 14 |
| GASKET | 1 | 12 |
| | 116 | 27 |
| | 153 | 24 |
| | 154 | 3 |

# Alpabetical Index




| Description | Fig. | Key |
|---|---|---|
| GASKET | 155 | 3 |
| GASKET/HOPPER | 157 | 24 |
| | 158 | 22 |
| | 159 | 24 |
| | 160 | 22 |
| GAUGE/FUEL/0-57 ASSY | 5 | 3 |
| GEAR, COUNTER | 124 | 9 |
| | 125 | 9 |
| GEAR, SPUR/13 | 113 | 10 |
| | 113 | 46 |
| GEAR, STERRING ARM | 23 | 6 |
| GEAR, SUN/LH | 124 | 5 |
| GEAR/BEVEL/10 | 15 | 1 |
| | 26 | 21 |
| | 96 | 19 |
| GEAR/BEVEL/10/8 | 34 | 8 |
| | 36 | 8 |
| GEAR/BEVEL/10/FERTIL | 33 | 8 |
| | 34 | 19 |
| | 35 | 8 |
| | 36 | 19 |
| GEAR/BEVEL/11 | 16 | 6 |
| | 26 | 4 |
| GEAR/BEVEL/12/FORGIN | 96 | 7 |
| | 96 | 29 |
| GEAR/BEVEL/15 | 16 | 7 |
| | 100 | 16 |
| GEAR/BEVEL/15/NP | 18 | 19 |
| GEAR/BEVEL/20 | 16 | 12 |
| | 26 | 8 |
| | 96 | 15 |
| GEAR/BEVEL/44 | 26 | 37 |
| GEAR/CLUTCH/PLANTING | 52 | 6 |
| GEAR/COUNTER/E | 124 | 9-A |
| | 125 | 9-A |
| GEAR/HST/NP COMP | 9 | 18 |
| GEAR/LH | 124 | 11 |
| GEAR/MARKER/LH COMP | 122 | 14 |
| GEAR/MARKER/RH COMP | 122 | 15 |
| GEAR/RH | 125 | 11 |
| GEAR/RIDGECLUTC COMP | 91 | 9 |
| | 91 | 9-A |
| GEAR/ROTOR COMP | 95 | 8 |
| GEAR/SENSOR COMP | 44 | 26 |
| | 110 | 7 |
| GEAR/SENSOR/B | 44 | 27 |
| GEAR/SPARSE PLANTING | 18 | 6 |
| | 18 | 7 |
| | 18 | 15 |
| | 18 | 18 |
| GEAR/SPUR/10 | 44 | 18 |
| | 113 | 77 |
| GEAR/SPUR/13 | 113 | 11 |
| | 113 | 47 |
| GEAR/SPUR/13/24TIMES | 100 | 23 |
| GEAR/SPUR/15/20TIMES | 100 | 24 |
| GEAR/SPUR/15-15 | 18 | 16 |
| GEAR/SPUR/15-17 | 17 | 1 |
| GEAR/SPUR/16/18TIMES | 100 | 25 |
| GEAR/SPUR/20 | 100 | 20 |
| | 100 | 41 |
| | 100 | 49 |
| GEAR/SPUR/21-28 | 18 | 5 |
| GEAR/SPUR/22 | 17 | 8 |
| GEAR/SPUR/24 | 100 | 47 |
| GEAR/SPUR/24/18TIMES | 100 | 45 |
| GEAR/SPUR/25/20TIMES | 100 | 44 |
| GEAR/SPUR/26 | 14 | 5 |
| GEAR/SPUR/26/24TIMES | 100 | 43 |
| GEAR/SPUR/27 | 14 | 4 |
| GEAR/SPUR/28 COMP | 44 | 23 |
| GEAR/SPUR/30 | 17 | 7 |
| GEAR/SPUR/31 COMP | 18 | 3 |
| GEAR/SPUR/36 | 14 | 2 |
| GEAR/SUN/LH/E | 124 | 5-A |
| GEAR/SUN/RH | 125 | 5 |
| GEAR/SUN/RH/E | 125 | 5-A |
| GEAR/SUPER/58 | 16 | 2 |
| GEAR/TURN | 15 | 13 |
| GEARSPAR/10-17 | 44 | 21 |
| GREASE | 145 | 1 |
| GREASE, PLANTING/300G | 144 | 2 |
| GRIP | 70 | 10 |
| | 71 | 10 |
| | 103 | 6 |
| | 111 | 34 |
| | 120 | 5 |
| GRIP, AXLE | 111 | 34-A |
| GRIP/07X34 | 20 | 11 |
| GRIP/11X60 | 67 | 68 |
| GRIP/11X60 | 68 | 67 |
| GROMMET/15X17X05 | 2 | 10 |
| GROMMET/15X20X02 | 89 | 15 |
| GROMMET/17X21X3 | 112 | 16 |
| GROMMET/20/SEEDING T | 126 | 33 |
| GROMMET/COLUMN | 37 | 9 |
| | 38 | 9 |
| GUARD/RAIL/8/LH COMP | 123 | 1 |
| GUARD/RAIL/8/RH COMP | 123 | 2 |
| GUARD/RAIL/8L/SCOMP | 123 | 1-A |
| GUARD/RAIL/8R/SCOMP | 123 | 2-A |
| GUARDPLATE SET | 149 | 1 |
| GUIDE/ADJUSUT | 108 | 14 |
| GUIDE/CHANGE/NP | 7 | 6 |
| GUIDE/DICTHER/CENTER | 115 | 20 |
| GUIDE/DICTHER/SIDE | 115 | 21 |
| GUIDE/FERTILIZERHOSE | 115 | 34 |
| GUIDE/HARNESS/LIFT | 97 | 9 |
| GUIDE/HST/NP COMP | 6 | 8 |
| GUIDE/ROTOR COMP | 95 | 31 |
| GUIDE/SEEDLING/LH/PZ | 129 | 35 |
| GUIDE/SEEDLING/RH/PZ | 129 | 36 |
| HAB/BRAKE | 14 | 6 |
| HANDLE/ADJUST | 108 | 16 |
| HANDLE/DELIVERY COMP | 143 | 3 |
| HARNESS, SEEDING TANK | 84 | 2 |
| HARNESS, WINKER WIRE/ | 127 | 5 |
| HARNESS/BATTERY EART | 85 | 2 |
| HARNESS/BATTERY/D/NP | 85 | 1 |
| HARNESS/BLOCK SENSOR | 109 | 4 |
| HARNESS/ENGINE/D/E16 | 83 | 13 |
| HARNESS/ENGINE/DFE16 | 82 | 13 |
| HARNESS/FERTILIZE AR | 67 | 54 |
| | 68 | 53 |
| HARNESS/HOPPER SENNS | 109 | 2 |
| HARNESS/HOPPER SENSO | 109 | 1 |
| HARNESS/MAIN/8D ASSY | 83 | 1 |
| | 83 | 1-A |
| | 83 | 1-B |
| | 83 | 1-C |
| HARNESS/MAIN/8DKF | 82 | 1 |
| | 82 | 1-A |
| | 82 | 1-B |
| | 82 | 1-C |
| HARNESS/REAR/8D ASSY | 83 | 12 |

# Alpabetical Index

2233-097-110-10


| Description | Fig. | Key |
|---|---|---|
| HARNESS/REAR/8D ASSY | 83 | 12-A |
| HARNESS/REAR/8DKF | 82 | 12 |
| | 82 | 12-A |
| HARNESS/SEEDLIN ASSY | 64 | 22 |
| | 64 | 54 |
| | 67 | 22 |
| | 68 | 21 |
| HARNESS/SEEDLING TAN | 84 | 1 |
| HARNESS/SENCER/PZ | 109 | 7 |
| HARNESS/STRAIGHT/E16 | 90 | 27 |
| HARNESS/SWGND | 109 | 22 |
| HARNESS/SWGND/5 | 5 | 5 |
| HARNESSBAND/202 | 82 | 24 |
| | 83 | 24 |
| HING/HOPPER | 157 | 21-A |
| | 158 | 19-A |
| | 159 | 21 |
| | 160 | 19 |
| HING/HOPPER/8 | 157 | 21 |
| | 158 | 19 |
| HITCH/8 COMP | 97 | 3 |
| HOLDDER/DISCHARGE | 111 | 37 |
| HOLDDER/DISCHARGE/SI | 111 | 41 |
| HOLDER | 130 | 39 |
| HOLDER(FUEL FILTER) | 5 | 16 |
| HOLDER,SEEDLONG,UPPE | 131 | 44 |
| | 131 | 75 |
| HOLDER/BOLTHANDOLE | 126 | 64 |
| HOLDER/CABLE/SEND | 119 | 21 |
| HOLDER/GUARD PLATE | 149 | 12 |
| HOLDER/JE/9-9 | 15 | 19 |
| | 37 | 5 |
| | 38 | 5 |
| | 100 | 6 |
| HOLDER/LEADCAM | 101 | 4 |
| | 102 | 3 |
| HOLDER/RESISTANTBAR | 130 | 23 |
| | 130 | 23-A |
| | 130 | 31 |
| | 130 | 31-A |
| HOLDER/SEEDING | 131 | 41 |
| HOLDER/SEEDLING FEED | 131 | 45 |
| | 131 | 76 |
| HOLDER/SEEDLING HOLD | 130 | 7 |
| | 130 | 10 |
| HOLDER/SEEDLING HOLD | 130 | 11 |
| | 130 | 13 |
| HOLDER/SEEDLINGARM/8 | 131 | 11 |
| HOLDER/SHAFT/PLANT | 31 | 9 |
| HOLDER/SPRING COMP | 131 | 8 |
| HOLDER/STOPPER/FLOAT | 121 | 16-A |
| HOLDER/SWIVEL/INSIDE | 130 | 38 |
| | 130 | 41 |
| HOLDER/SWIVEL/OUTSID | 130 | 29 |
| | 130 | 36 |
| HOOD/MAGNET | 58 | 2 |
| | 59 | 2 |
| HOOD/NP ASSY | 55 | 1 |
| | 56 | 1 |
| HOOD/REAR/8G/NP | 57 | 1 |
| HOOK | 65 | 6 |
| | 112 | 7 |
| HOOK,COUPSULE | 113 | 3 |
| | 113 | 39 |
| HOOK,HOPPER | 157 | 38 |
| | 158 | 36 |
| HOOK/BONNET/PQ | 112 | 12 |
| HOOK/BRUSH | 157 | 9 |
| | 159 | 9 |
| HOOK/CAPSULE | 113 | 3-A |
| | 113 | 39-A |
| HOOK/FUNNEL | 113 | 9 |
| | 113 | 45 |
| HOOK/HOOD/REAR | 37 | 16 |
| | 38 | 17 |
| HOOK/MARKER | 122 | 27 |
| HOOK/RAIL | 67 | 69 |
| | 68 | 68 |
| HOOK/SCRAPER/8R COMP | 64 | 60 |
| | 67 | 60 |
| | 68 | 59 |
| HOOK/SEEDLING BOX/SL | 64 | 28 |
| | 67 | 28 |
| | 68 | 27 |
| HOPPER/2/LH/8 | 158 | 2 |
| | 160 | 2 |
| HOPPER/2/LH/8/OUT | 157 | 1 |
| | 159 | 1 |
| HOPPER/2/RH/8 | 157 | 2 |
| | 159 | 2 |
| HOPPER/2/RH/8/OUT | 158 | 1 |
| | 160 | 1 |
| HOPPER/4/LH COMP | 114 | 1 |
| | 114 | 1-A |
| HOPPER/4/RH COMP | 114 | 2 |
| | 114 | 2-A |
| HOPPERGUIDE | 157 | 26 |
| | 158 | 24 |
| | 159 | 26 |
| | 160 | 24 |
| HOPPERHOOK | 157 | 38-A |
| | 158 | 36-A |
| | 159 | 38 |
| | 160 | 36 |
| HOPPERNET | 114 | 10 |
| HORN ASSY | 79 | 42 |
| | 80 | 41 |
| | 81 | 42 |
| HOSE | 47 | 25 |
| HOSE(8X12X1600) | 47 | 22 |
| HOSE,HYDRAULIC/750 A | 47 | 20 |
| HOSE/07X11X1750 | 5 | 18 |
| HOSE/07X11X460 | 5 | 20 |
| HOSE/08X1160 | 118 | 3 |
| HOSE/08X430 | 118 | 7 |
| HOSE/08X530 | 118 | 6 |
| HOSE/08X800 | 118 | 5 |
| HOSE/1430/H | 146 | 4 |
| HOSE/14X22X2500 | 47 | 26 |
| HOSE/19X25X80 | 47 | 5 |
| HOSE/425 ASSY | 47 | 19-A |
| HOSE/650 | 11 | 22 |
| HOSE/AIRCLEANER | 2 | 24 |
| HOSE/FERTILIZER/6 | 115 | 1 |
| HOSE/FERTILIZER/7 | 115 | 2 |
| HOSE/FERTILIZER/LH | 115 | 7 |
| HOSE/FERTILIZER/RH | 115 | 8 |
| HOSE/FERTILIZER/STRA | 115 | 6 |
| HOSE/FERTILIZER/UPPE | 115 | 9 |
| | 115 | 9-A |
| HOSE/FUEL/1280 | 5 | 11 |
| HOSE/FUEL/340 | 5 | 10 |
| HOSE/HYDRAULIC/2150 | 47 | 21 |
| HOSE/HYDRO/1000 ASSY | 146 | 5 |
| HOSE/RADIATOR/ROWER | 2 | 14 |

# Alpabetical Index




| Description | Fig. | Key |
|---|---|---|
| HOSE/RADIATOR/UPPER | 2 | 13 |
| HOSE/RUBBER | 2 | 30 |
| | 2 | 32 |
| | 2 | 34 |
| | 2 | 35 |
| HOSE/WEIGHT/PPZ | 115 | 10 |
| HST/NP/23 ASSY | 8 | 1 |
| HUB,MARKER | 122 | 4 |
| HUB/12X05 | 108 | 28 |
| HUB/12X08 | 108 | 27 |
| HUB/21X35X76 | 95 | 23 |
| HUB/21X36X33 | 94 | 15 |
| HUB/21X36X51/CENTER | 94 | 6 |
| HUB/DIFF/DRIVE | 16 | 15 |
| HUB/PLANTING ARM | 154 | 20 |
| | 155 | 20 |
| HUB/PLANTING/DRIVEN | 18 | 13 |
| HUB/PULLEY | 8 | 11 |
| HUB/ROLLER CLUTCH | 108 | 48 |
| HUB/ROLLER CLUTCH/NP | 108 | 52 |
| HUB/ROTOR/8/M | 94 | 2 |
| | 94 | 13 |
| HYDRAULIC LOCK/6/8/5 | 146 | 1 |
| INSULATOR | 79 | 17 |
| | 80 | 16 |
| | 81 | 17 |
| | 90 | 43 |
| INSULATOR/MOUNT/34 | 1 | 7 |
| INSULATOR/MOUNT/LH | 1 | 6 |
| INTERFACE ASSY | 89 | 24 |
| JOINT | 106 | 4 |
| JOINT BALL M08LH | 7 | 20 |
| | 9 | 14 |
| | 99 | 20 |
| | 108 | 63 |
| | 147 | 17 |
| JOINT BALL M08RH | 7 | 18 |
| | 9 | 12 |
| | 25 | 1 |
| | 99 | 19 |
| | 108 | 65 |
| | 147 | 16 |
| JOINT,BLOWER | 112 | 35 |
| JOINT/38 | 115 | 18 |
| JOINT/66 | 115 | 17 |
| JOINT/BLOWER | 112 | 36 |
| JOINT/DISCHARGE | 111 | 6 |
| JOINT/FERTILIZE/DUCT | 112 | 38 |
| JOINT/FERTLIZE/1 | 115 | 16 |
| JOINT/FERTLIZE/CENTE | 115 | 15 |
| JOINT/FERTLIZE/LH | 115 | 13 |
| JOINT/FERTLIZE/RH | 115 | 14 |
| JOINT/RAILL/NP8 | 129 | 6 |
| | 129 | 6-A |
| JOINT/REAR/1200/D | 30 | 1 |
| | 30 | 1-A |
| JOINTT-TYPE 2 | 118 | 10 |
| KEY | 79 | 24 |
| | 80 | 23 |
| | 81 | 24 |
| | 100 | 46 |
| KEY,05X05X18 PLUS | 124 | 12 |
| | 125 | 12 |
| KEY,CARRIER STAR | 100 | 21 |
| KEY,SPROCKET | 124 | 25 |
| | 125 | 25 |
| KEY/05X05X26 | 16 | 14 |
| KEY/05X05X35 | 8 | 10 |
| KEY/05X05X50 | 100 | 52 |
| | 101 | 3 |
| KEY/05X05X51 | 117 | 6 |
| KEY/06X06X18 | 18 | 4 |
| KIT/SEAL ASSY | 54 | 2 |
| KNOB SET | 63 | 8 |
| KNOB/BL | 79 | 20 |
| | 80 | 19 |
| | 81 | 20 |
| | 90 | 41 |
| KNOB/GR | 79 | 21 |
| | 80 | 20 |
| | 81 | 21 |
| KNOB/HANDLE | 126 | 55 |
| KNOB/HYDRAULIC SENSI | 79 | 19 |
| | 80 | 18 |
| | 81 | 19 |
| KNOB/RED | 79 | 22 |
| | 80 | 21 |
| | 81 | 22 |
| KNOCK/SEND/PZ8 | 100 | 26 |
| LABEL/A MOUNT OF FER | 141 | 2 |
| LABEL/A MOUNT OF FER | 142 | 2 |
| LABEL/BATTERY/K | 137 | 17 |
| | 138 | 17 |
| LABEL/CAUTION | 134 | 7 |
| | 135 | 7 |
| LABEL/CAUTION/BATTER | 134 | 5 |
| | 135 | 5 |
| LABEL/CAUTION/BELT/ | 134 | 2 |
| | 135 | 2 |
| LABEL/CAUTION/BLOWER | 141 | 9 |
| | 142 | 9 |
| LABEL/CAUTION/CHECK/ | 134 | 1 |
| | 135 | 1 |
| LABEL/CAUTION/COVER/ | 134 | 4 |
| | 135 | 4 |
| LABEL/CAUTION/DRIVE/ | 134 | 8 |
| | 135 | 8 |
| LABEL/CAUTION/FAN/K | 134 | 9 |
| | 135 | 9 |
| LABEL/CAUTION/FERTIL | 141 | 3 |
| | 142 | 3 |
| | 142 | 16 |
| LABEL/CAUTION/HAND | 141 | 8 |
| | 142 | 8 |
| LABEL/CAUTION/HOPPER | 141 | 4 |
| | 141 | 7 |
| | 142 | 4 |
| | 142 | 7 |
| LABEL/CAUTION/JUST/P | 134 | 15 |
| | 135 | 15 |
| LABEL/CAUTION/MARKER | 134 | 11 |
| | 135 | 11 |
| LABEL/CAUTION/SEEDLI | 135 | 20 |
| LABEL/CAUTION/WASHIN | 135 | 21 |
| LABEL/CAUTION/Z LINK | 135 | 19 |
| LABEL/CLEANING/CAPSU | 141 | 6 |
| | 142 | 6 |
| LABEL/CLUTCH/LH/E16 | 141 | 12 |
| | 142 | 12 |
| LABEL/CLUTCH/RH/E16 | 141 | 13 |
| | 142 | 13 |
| LABEL/CONTROLLER SET | 137 | 11 |
| | 138 | 11 |
| LABEL/CONTROLLER/Z/E | 139 | 4 |
| LABEL/DEPTH/E16 | 137 | 14 |

# Alpabetical Index

2233-097-110-10


| Description | Fig. | Key |
|---|---|---|
| LABEL/DEPTH/E16 | 138 | 14 |
| LABEL/DIESELFUEL/K | 137 | 12 |
| | 138 | 12 |
| LABEL/DISCHARGE LEVE | 141 | 10 |
| LABEL/DISCHARGE OPER | 141 | 5 |
| | 141 | 5-A |
| | 142 | 5 |
| LABEL/DISCHARGELEVER | 141 | 10-A |
| | 142 | 10 |
| LABEL/ERROR | 139 | 3 |
| LABEL/ERROR VIEW/NP/ | 137 | 10 |
| | 138 | 10 |
| LABEL/FERTILIZER/NP/ | 141 | 1 |
| | 142 | 1 |
| LABEL/FRASH | 128 | 2 |
| LABEL/FUSE | 82 | 2 |
| | 83 | 2 |
| LABEL/FUSE/ENGINE/K | 83 | 16 |
| LABEL/FUSE/ENGINE/KF | 82 | 16 |
| LABEL/FUSE/Z/E16 | 90 | 28 |
| LABEL/HANDLE | 141 | 11 |
| | 142 | 11 |
| LABEL/HOOD/REAR | 137 | 4 |
| | 138 | 4 |
| LABEL/LEFT/E16 | 137 | 15 |
| | 138 | 15 |
| LABEL/OIL/K | 137 | 18 |
| | 138 | 18 |
| LABEL/OILING/NP/E16 | 137 | 9 |
| | 138 | 9 |
| LABEL/PANEL/LH/6/E16 | 80 | 9 |
| LABEL/PANEL/LH/6/N/E | 79 | 9 |
| | 81 | 9 |
| LABEL/PANEL/MAIN/8D/ | 79 | 8 |
| | 80 | 8 |
| | 81 | 8 |
| LABEL/PANEL/RH/8/E16 | 79 | 10 |
| | 80 | 10 |
| | 81 | 10 |
| LABEL/PLANT INTERVAL | 140 | 1 |
| | 140 | 2 |
| LABEL/RIGHT/E16 | 137 | 16 |
| | 138 | 16 |
| LABEL/ROPE/LENGTH/E1 | 139 | 5 |
| LABEL/SEEDLING PICKI | 137 | 13 |
| LABEL/SEEDLING PICKI | 138 | 13 |
| LABEL/SLIDER/LEVER/K | 140 | 3 |
| LABEL/STEERING AMOUN | 139 | 2 |
| LABEL/SWITCH/E16 | 109 | 17 |
| LABEL/TACT/SWITCH/E1 | 79 | 13 |
| | 80 | 13 |
| | 81 | 13 |
| LABEL/TOTALCLUTCH/K | 141 | 14 |
| | 142 | 14 |
| LABEL/WARNING | 134 | 12 |
| | 135 | 12 |
| LABEL/WARNING/BRAKE/ | 134 | 18 |
| | 135 | 18 |
| LABEL/WARNING/GAS/K | 134 | 10 |
| | 135 | 10 |
| LABEL/WARNING/JUST/P | 134 | 16 |
| | 135 | 16 |
| LABEL/WARNING/MUFFLE | 134 | 6 |
| | 135 | 6 |
| LABEL/WARNING/PEDAL/ | 134 | 3 |
| | 135 | 3 |
| LABEL/WARNING/PLANT | 134 | 17 |
| | 135 | 17 |
| LABEL/WARNING/RADIAT | 134 | 14 |
| | 135 | 14 |
| LABEL/WARNING/SHAFT | 134 | 13 |
| | 135 | 13 |
| LABEL/WARNING/Z/E16 | 136 | 1 |
| LABER/ASIST/E16 | 79 | 52 |
| LAMP/HEAD/NP ASSY | 78 | 1 |
| LAMP/MASCOT/NP8 ASSY | 76 | 1 |
| LAMP/TURNSIGNAL ASSY | 127 | 1 |
| LEVER | 70 | 9 |
| | 71 | 9 |
| | 100 | 31 |
| LEVER/ASSIST/E1 ASSY | 79 | 51 |
| LEVER/CHANGE/NP COMP | 7 | 1 |
| LEVER/DEPTH/8 COMP | 103 | 5 |
| LEVER/DISCHARGE | 111 | 27 |
| LEVER/DISCHARGE/8 | 111 | 27-A |
| LEVER/FERTILIZE CLUT | 113 | 89 |
| | 113 | 89-A |
| LEVER/FERTILIZE/CLUT | 113 | 89-B |
| | 113 | 89-C |
| LEVER/GLIP | 7 | 2 |
| LEVER/HST/NP SET | 6 | 1 |
| LEVER/PICKING COMP | 120 | 4 |
| LEVER/TOTALCLUTCH | 113 | 101 |
| LIFT/8 COMP | 97 | 1 |
| LINEMARKER/NP | 122 | 8 |
| LINER/KINGPIN | 26 | 12 |
| LINING/HST | 6 | 14 |
| LINK/FLOAT/NP ASSY | 147 | 2 |
| LINK/FLOAT/NP/REP | 147 | 1 |
| LINK/LOWER/8 COMP | 50 | 1 |
| LINK/UPPER/6D COMP | 51 | 1 |
| LOCK/BRAKE | 39 | 14 |
| LOCK/CARRY | 67 | 63 |
| | 68 | 62 |
| LOCKNUT | 154 | 8 |
| | 155 | 8 |
| MAGNET/BRAKE | 40 | 10 |
| MANUAL/OPERATION/F | 143 | 1 |
| | 143 | 1-A |
| | 143 | 1-B |
| | 143 | 1-C |
| MARKER(M) | 77 | 6 |
| MARKER/SIDE/8/NP | 77 | 1 |
| | 77 | 1-A |
| MAT,REAR STEP | 74 | 11 |
| | 75 | 11 |
| MAT/CENTER/LH/NP | 58 | 16 |
| | 59 | 16 |
| MAT/CENTER/RH/NP | 58 | 17 |
| | 59 | 17 |
| MAT/FRONT/LH/NP | 58 | 4 |
| | 59 | 4 |
| MAT/FRONT/RH/NP | 58 | 5 |
| | 59 | 5 |
| MAT/REAR/NP | 62 | 3 |
| METAL/52X62X16 | 33 | 33 |
| | 35 | 33 |
| METAL/CAM/LEAD | 101 | 8 |
| METAL/HST COMP | 8 | 17 |
| METAL/RELIEF/KTMS6 | 53 | 3 |
| METAL/S COMP | 116 | 34 |
| METAL/SLIDE | 153 | 5 |
| MIRROR ASSY | 66 | 2 |
| MIRROR ASSY | 66 | 3 |
| MOLDING/HOOD/LH | 137 | 1 |

# Alpabetical Index




| Description | Fig. | Key |
|---|---|---|
| MOLDING/HOOD/LH | 138 | 1 |
| MOLDING/HOOD/RH | 137 | 2 |
| | 138 | 2 |
| MOLE/70 | 2 | 40 |
| | 56 | 9 |
| MONITOR/STRAIGHT/E16 | 90 | 44 |
| MOTER | 64 | 20 |
| | 64 | 52 |
| | 67 | 20 |
| | 67 | 52 |
| | 68 | 19 |
| | 68 | 51 |
| | 95 | 4 |
| MOTOR | 44 | 12 |
| MOTOR/ASIST ASSY | 44 | 11 |
| MOTOR/LH ASSY | 52 | 4 |
| | 91 | 3 |
| | 122 | 19 |
| MOTOR/RH ASSY | 9 | 23 |
| | 122 | 20 |
| MOTORBRUSH/FZ ASSY | 112 | 25 |
| MOTORCAP/LARGE | 112 | 26 |
| MUFFLER/D COMP | 1 | 11 |
| NEEDLE | 153 | 15 |
| NETPOCKET | 73 | 2 |
| NIPPLE,GREASE | 31 | 13 |
| | 50 | 5 |
| | 92 | 9 |
| | 93 | 9 |
| NIRONSETWASHER/M8 | 89 | 10 |
| NOZZLE/OIL | 118 | 9 |
| NUT | 64 | 29 |
| | 64 | 61 |
| | 65 | 7 |
| | 66 | 7 |
| | 67 | 29 |
| | 67 | 61 |
| | 68 | 28 |
| | 68 | 60 |
| NUT, HOLDER | 126 | 60 |
| NUT,LOCK PUSH OUT | 154 | 12 |
| | 155 | 12 |
| NUT,SPEED/4 | 157 | 4 |
| | 157 | 23 |
| | 158 | 4 |
| NUT,SPEED/4 | 158 | 21 |
| | 159 | 4 |
| | 159 | 23 |
| | 160 | 4 |
| | 160 | 21 |
| NUT,SPEED/M4 | 84 | 3 |
| NUT,SPEED/M5 | 78 | 4 |
| NUT,SUS/M3 | 109 | 15 |
| | 112 | 10 |
| | 112 | 29 |
| | 157 | 34 |
| | 157 | 36 |
| | 158 | 32 |
| | 158 | 34 |
| | 159 | 34 |
| | 159 | 36 |
| | 160 | 32 |
| | 160 | 34 |
| NUT,SUS/M4 | 157 | 18 |
| | 157 | 43 |
| | 158 | 16 |
| | 158 | 41 |
| | 159 | 18 |
| | 159 | 43 |
| | 160 | 16 |
| | 160 | 41 |
| NUT,SUS/M6 | 108 | 50 |
| | 110 | 9 |
| | 112 | 41 |
| | 113 | 74 |
| | 115 | 32 |
| | 154 | 24 |
| | 155 | 24 |
| NUT,SUS/M8 | 1 | 13 |
| | 108 | 35 |
| | 108 | 42 |
| | 124 | 24 |
| | 125 | 24 |
| NUT,WASHER/M6 | 63 | 12 |
| NUT/ADJUST | 108 | 12 |
| NUT/LH/M08 | 7 | 21 |
| | 9 | 15 |
| | 99 | 22 |
| | 108 | 64 |
| | 147 | 19 |
| NUT/M10 | 8 | 13 |
| | 66 | 10 |
| | 101 | 20 |
| | 126 | 56 |
| NUT/M10,P=1.25 | 24 | 2 |
| NUT/M10/7T | 23 | 24 |
| NUT/M12 | 1 | 8 |
| | 22 | 4 |
| NUT/M12/7T | 27 | 5 |
| NUT/M14 | 6 | 18 |
| | 48 | 4 |
| NUT/M20 | 79 | 36 |
| | 80 | 35 |
| | 81 | 36 |
| NUT/M4 | 44 | 20 |
| | 44 | 31 |
| | 90 | 38 |
| NUT/M6 | 6 | 28 |
| | 37 | 18 |
| | 38 | 19 |
| | 39 | 25 |
| | 40 | 9 |
| | 65 | 14 |
| | 82 | 32 |
| | 83 | 32 |
| | 90 | 4 |
| | 92 | 19 |
| | 111 | 10 |
| | 130 | 15 |
| NUT/M6X1.0/LH | 92 | 18 |
| NUT/M8 | 4 | 13 |
| | 6 | 7 |
| | 7 | 5 |
| | 7 | 19 |
| | 7 | 22 |
| | 9 | 13 |
| | 9 | 16 |
| | 25 | 2 |
| | 40 | 30 |
| | 41 | 3 |
| | 52 | 18 |
| | 69 | 4 |
| | 69 | 8 |
| | 70 | 4 |
| | 70 | 8 |

# Alpabetical Index

2233-097-110-10


| Description | Fig. | Key |
|---|---|---|
| NUT/M8 | 71 | 4 |
| | 71 | 8 |
| | 72 | 4 |
| | 74 | 18 |
| | 75 | 18 |
| | 76 | 3 |
| | 77 | 3 |
| | 89 | 2 |
| | 95 | 37 |
| | 99 | 21 |
| | 106 | 6 |
| | 108 | 67 |
| | 109 | 21 |
| | 113 | 102 |
| | 117 | 3 |
| | 127 | 4 |
| | 146 | 10 |
| | 147 | 18 |
| | 149 | 11 |
| NUT/M8/7T | 23 | 7 |
| | 116 | 45 |
| | 124 | 29 |
| | 125 | 29 |
| | 129 | 17 |
| NUT/RING | 79 | 25 |
| | 80 | 24 |
| | 81 | 25 |
| NUT/U/M12 | 37 | 12 |
| NUT/WASER/M6/SUS | 108 | 6 |
| | 111 | 32 |
| | 112 | 45 |
| | 121 | 22 |
| | 129 | 23 |
| | 129 | 39 |
| NUT/WASHER | 115 | 23 |
| NUT/WASHER/M10 | 35 | 63 |
| | 36 | 59 |
| | 60 | 17 |
| | 61 | 17 |
| | 64 | 3 |
| | 64 | 35 |
| | 67 | 3 |
| | 67 | 35 |
| | 112 | 6 |
| NUT/WASHER/M4 | 5 | 4 |
| NUT/WASHER/M5 | 79 | 47 |
| | 80 | 46 |
| | 81 | 47 |
| | 82 | 28 |
| | 83 | 28 |
| NUT/WASHER/M6 | 5 | 14 |
| | 6 | 22 |
| | 9 | 10 |
| | 9 | 22 |
| | 47 | 16 |
| | 51 | 11 |
| | 64 | 16 |
| | 64 | 51 |
| | 67 | 16 |
| | 67 | 51 |
| | 67 | 71 |
| | 68 | 15 |
| | 68 | 50 |
| | 68 | 70 |
| | 79 | 41 |
| | 79 | 44 |
| | 80 | 40 |
| | 80 | 43 |
| | 80 | 49 |
| | 81 | 41 |
| | 81 | 44 |
| | 82 | 20 |
| | 83 | 20 |
| | 88 | 2 |
| | 88 | 5 |
| | 90 | 17 |
| | 90 | 18 |
| | 90 | 20 |
| | 90 | 47 |
| | 99 | 16 |
| | 106 | 10 |
| | 126 | 31 |
| | 126 | 41 |
| | 129 | 34 |
| | 130 | 12 |
| | 131 | 10 |
| | 131 | 15 |
| | 131 | 50 |
| | 131 | 79 |
| | 133 | 12 |
| NUT/WASHER/M6 | 147 | 26 |
| NUT/WASHER/M8 | 5 | 17 |
| | 6 | 10 |
| | 8 | 22 |
| | 9 | 4 |
| | 10 | 10 |
| | 37 | 15 |
| | 38 | 16 |
| | 39 | 6 |
| | 60 | 4 |
| | 60 | 8 |
| | 61 | 4 |
| | 61 | 8 |
| | 62 | 9 |
| | 63 | 4 |
| | 66 | 13 |
| | 73 | 5 |
| | 73 | 9 |
| | 74 | 4 |
| | 74 | 8 |
| | 74 | 15 |
| | 75 | 4 |
| | 75 | 8 |
| | 75 | 15 |
| | 85 | 3 |
| | 89 | 21 |
| | 95 | 30 |
| | 99 | 24 |
| | 116 | 57 |
| | 119 | 10 |
| | 119 | 17 |
| | 119 | 20 |
| | 119 | 24 |
| | 120 | 7 |
| | 121 | 4 |
| | 121 | 12 |
| | 122 | 28 |
| | 129 | 32 |
| | 146 | 12 |
| | 147 | 21 |
| | 149 | 5 |
| OIL SEAL | 153 | 32 |
| OILSEAL/SD018243.5/T | 131 | 4 |
| O-RING | 54 | 3 |
| O-RING/1A,G35 | 8 | 3 |

# Alpabetical Index




| Description | Fig. | Key |
|---|---|---|
| O-RING/1A,G85 | 26 | 17 |
| O-RING/1A,P10 | 19 | 5 |
| | 19 | 11 |
| | 19 | 17 |
| | 100 | 33 |
| | 108 | 13 |
| O-RING/1A,P12 | 47 | 9 |
| O-RING/1A,P15 | 8 | 8 |
| | 116 | 42 |
| O-RING/1A,P28 | 154 | 21 |
| | 155 | 21 |
| O-RING/1A,P30 | 47 | 2 |
| O-RING/1A,P39 | 8 | 2 |
| | 45 | 2 |
| O-RING/1A,P8 | 11 | 12 |
| | 11 | 23 |
| O-RING/1A,P9 | 116 | 41 |
| O-RING/1A,S15 | 16 | 20 |
| O-RING/1B,P11 | 49 | 2 |
| | 53 | 17 |
| | 54 | 8 |
| | 54 | 10 |
| | 153 | 28 |
| O-RING/1B,P14 | 45 | 5 |
| | 53 | 6 |
| | 152 | 5 |
| | 153 | 27 |
| O-RING/1B,P16 | 53 | 14 |
| O-RING/1B,P18 | 53 | 16 |
| O-RING/1B,P6 | 53 | 7 |
| O-RING/1B,P9 | 152 | 7 |
| O-RING/1B,S29 | 152 | 15 |
| O-RING/OR | 124 | 19 |
| | 125 | 19 |
| ORNAMENT/ARM/E16 | 142 | 15 |
| ORNAMENT/DIESEL | 137 | 3 |
| | 138 | 3 |
| ORNAMENT/DX/SHIFT | 6 | 4 |
| ORNAMENT/FUSE/MAIN/8 | 82 | 7 |
| | 83 | 7 |
| ORNAMENT/FUSE/REAR/E | 82 | 11 |
| | 83 | 11 |
| ORNAMENT/ISEKI | 55 | 3 |
| | 56 | 3 |
| | 137 | 6 |

| Description | Fig. | Key |
|---|---|---|
| ORNAMENT/ISEKI | 138 | 6 |
| ORNAMENT/NAERAIL/1/E | 138 | 19 |
| ORNAMENT/NAERAIL/2/E | 138 | 20 |
| ORNAMENT/NP80 | 137 | 7 |
| | 138 | 7 |
| ORNAMENT/OPERESTA | 139 | 1 |
| ORNAMENT/STEERING | 137 | 8 |
| | 137 | 8-A |
| | 138 | 8 |
| ORNAMENT/TONGYANG/NP | 137 | 5 |
| | 138 | 5 |
| PACKING | 2 | 29 |
| | 5 | 8 |
| | 124 | 26 |
| | 125 | 26 |
| PACKING,ROD | 152 | 13 |
| PACKING/90X105X9 | 26 | 14 |
| PACKING/CAPSULE/LOWE | 113 | 8 |
| | 113 | 44 |
| PACKING/CAPSULE/UPPE | 113 | 24 |
| | 113 | 60 |
| PACKING/HOPPER/8 | 157 | 15 |
| | 158 | 13 |
| | 159 | 15 |
| | 160 | 13 |
| PACKING/ROHTO | 115 | 4 |
| PACKING/SHUTTER | 157 | 28 |
| | 158 | 26 |
| | 159 | 28 |
| | 160 | 26 |
| PALTE/GEAR | 113 | 4 |
| | 113 | 40 |
| PANEL/DISCHARGE COMP | 111 | 20 |
| | 111 | 20-A |
| PANEL/HOOD/NP | 79 | 7 |
| | 80 | 7 |
| | 81 | 7 |
| PANEL/MONITOR/NP/E16 | 79 | 1 |
| | 80 | 1 |
| | 80 | 1-A |
| | 81 | 1 |
| PEDAL/ACCELERATOR/D/ | 10 | 4 |
| PEDAL/BRAKE/8/N COMP | 39 | 1 |
| PEDAL/BRAKE/LH/NP | 40 | 1 |
| PEDAL/BRAKE/RH/NP | 40 | 13 |

| Description | Fig. | Key |
|---|---|---|
| PEDAL/DIFFLOCK COMP | 21 | 4 |
| PIECE/FORK/PK | 144 | 1 |
| PIN | 7 | 10 |
| | 9 | 20 |
| | 31 | 5 |
| | 31 | 8 |
| | 33 | 64 |
| | 35 | 66 |
| | 63 | 9 |
| | 65 | 18-A |
| | 82 | 19 |
| | 83 | 19 |
| | 91 | 32 |
| | 111 | 26 |
| | 111 | 31 |
| | 113 | 94 |
| | 121 | 24 |
| | 131 | 83 |
| PIN STRAIGHT | 30 | 3 |
| PIN, TAPPING | 126 | 10 |
| | 126 | 18 |
| | 126 | 34 |
| PIN,ARM PUSH-OUT | 154 | 15 |
| | 155 | 15 |
| PIN,CLUTCH | 131 | 69 |
| PIN,COTTER/2.5X15/SU | 122 | 7 |
| PIN,COTTER/2.5X20/SU | 94 | 17 |
| | 108 | 32 |
| | 108 | 37 |
| | 108 | 47 |
| | 111 | 39 |
| PIN,COUNTER,GEAR | 124 | 8 |
| | 125 | 8 |
| PIN,FLOAT | 99 | 8 |
| | 147 | 9 |
| PIN,HAIR (10) | 73 | 7 |
| | 104 | 8 |
| | 121 | 6 |
| | 121 | 14 |
| PIN,HAIR/19 | 130 | 45 |
| PIN,KNOCKED | 126 | 51 |
| PIN,RAIL/LOWER/OUTER | 126 | 65 |
| PIN,SEAT SET | 73 | 6 |
| PIN,SNAP/6 | 65 | 18 |
| | 130 | 28 |

# Alpabetical Index




| Description | Fig. | Key |
|---|---|---|
| PIN, SNAP/6 | 133 | 5 |
| PIN, SPLIT/2.5X15 | 20 | 3 |
| | 20 | 10 |
| | 39 | 20 |
| | 39 | 32 |
| | 91 | 31 |
| | 126 | 46 |
| | 131 | 82 |
| PIN, SPLIT/2.5X35 | 115 | 12 |
| PIN, SPLIT/2X20 | 92 | 3 |
| | 92 | 20 |
| | 93 | 3 |
| PIN, SPLIT/2X25 | 24 | 3 |
| PIN, SPLIT/3X15 | 52 | 20 |
| | 92 | 14 |
| PIN, SPLIT/3X20 | 7 | 11 |
| | 7 | 27 |
| | 9 | 21 |
| | 10 | 7 |
| | 39 | 2 |
| | 39 | 10 |
| | 39 | 17 |
| | 40 | 14 |
| | 50 | 9 |
| | 52 | 21 |
| | 67 | 65 |
| | 67 | 74 |
| | 68 | 64 |
| | 68 | 73 |
| | 99 | 5 |
| | 99 | 18 |
| | 123 | 5 |
| | 147 | 6 |
| | 147 | 15 |
| | 147 | 27 |
| PIN, SPLIT/3X25 | 70 | 15 |
| | 71 | 15 |
| PIN, SPLIT/3X30 | 67 | 76 |
| | 68 | 75 |
| PIN, SPLIT/3X30/SUS | 94 | 11 |
| | 94 | 20 |
| | 107 | 5 |
| PIN, SPLIT/3X35 | 50 | 12 |
| | 51 | 6 |
| | 149 | 9 |

| Description | Fig. | Key |
|---|---|---|
| PIN, SPLIT/3X40 | 37 | 7 |
| | 38 | 7 |
| | 65 | 5 |
| | 65 | 24 |
| | 67 | 67 |
| | 68 | 2 |
| | 68 | 66 |
| PIN, SPLIT/4X25 | 20 | 12 |
| PIN, ST | 153 | 40 |
| PIN, ST, A/6X16 | 100 | 4 |
| | 116 | 5 |
| | 129 | 18 |
| PIN, ST, A/8X18 | 8 | 7 |
| | 11 | 6 |
| | 11 | 19 |
| | 15 | 17 |
| | 16 | 9 |
| | 26 | 2 |
| | 33 | 3 |
| | 33 | 28 |
| | 33 | 62 |
| | 34 | 3 |
| | 34 | 29 |
| | 34 | 56 |
| | 35 | 3 |
| | 35 | 28 |
| | 35 | 64 |
| | 36 | 3 |
| | 36 | 29 |
| | 36 | 60 |
| | 44 | 4 |
| | 44 | 10 |
| PIN, ST, B/3X8 | 154 | 13 |
| | 155 | 13 |
| PIN, STAND | 58 | 14 |
| | 59 | 14 |
| PIN, TRIP-HOOK ROD | 9 | 36 |
| PIN/+ | 157 | 7 |
| | 157 | 10 |
| | 158 | 7 |
| | 159 | 7 |
| | 159 | 10 |
| | 160 | 7 |
| PIN/04X86 | 157 | 13 |
| | 158 | 11 |

| Description | Fig. | Key |
|---|---|---|
| PIN/04X86 | 159 | 13 |
| | 160 | 11 |
| PIN/06X36 | 31 | 4 |
| | 31 | 7 |
| | 111 | 30 |
| PIN/06X41 | 65 | 15 |
| PIN/08X27 | 52 | 13 |
| PIN/08X32 | 70 | 11 |
| | 71 | 11 |
| PIN/08X41 | 7 | 29 |
| PIN/08X47 | 52 | 13-A |
| PIN/08X59 | 106 | 11 |
| PIN/10X122 | 104 | 7 |
| | 121 | 5 |
| | 121 | 13 |
| PIN/10X36 | 108 | 40 |
| PIN/10X79 COMP | 9 | 20-A |
| PIN/12X100 | 70 | 13 |
| | 71 | 13 |
| PIN/12X31 | 10 | 9 |
| PIN/12X82 | 99 | 4 |
| | 147 | 5 |
| PIN/18X211 | 51 | 4 |
| PIN/18X247 | 50 | 10 |
| PIN/18X315 COMP | 50 | 3 |
| | 51 | 2 |
| PIN/18X83 COMP | 46 | 3 |
| PIN/19X93 | 68 | 33 |
| PIN/2 | 33 | 63 |
| | 35 | 65 |
| PIN/25 | 20 | 5 |
| PIN/6X44 | 94 | 16 |
| PIN/83E16 | 130 | 26 |
| PIN/AZECLUTCH | 116 | 52 |
| PIN/BEARING/FRONT PL | 126 | 66 |
| PIN/HAIR | 112 | 34 |
| PIN/LOCK/CARRY COMP | 67 | 72 |
| | 68 | 71 |
| PIN/LOCK/STAND | 123 | 3 |
| PIN/LOCKED | 124 | 21 |
| | 125 | 21 |
| PIN/PLANTING/CLUTCH | 18 | 33 |
| | 18 | 33-A |
| PIN/ROLLER | 64 | 27 |
| | 64 | 59 |

| Description | Fig. | Key |
|---|---|---|
| PIN/ROLLER | 67 | 27 |
| | 67 | 59 |
| | 68 | 26 |
| | 68 | 58 |
| PIN/SEEDLING TANK SW | 126 | 44 |
| PIN/SENSOR | 90 | 1 |
| PIN/SNAP/08 | 5 | 2 |
| | 10 | 5 |
| | 58 | 15 |
| | 59 | 15 |
| | 70 | 12 |
| | 71 | 12 |
| PIN/STOPPER | 131 | 53 |
| PIN/STOPPER/8 | 7 | 30 |
| | 9 | 35 |
| | 10 | 3 |
| | 21 | 5 |
| | 25 | 6 |
| | 39 | 22 |
| | 40 | 23 |
| | 40 | 28 |
| | 52 | 14 |
| | 99 | 9 |
| | 99 | 11 |
| | 107 | 7 |
| | 111 | 24 |
| | 147 | 10 |
| | 147 | 12 |
| PIPE | 2 | 31 |
| PIPING/PUMP/VALVE/8 | 47 | 18 |
| | 47 | 18-A |
| PIPING/VALVE/POWERST | 47 | 19 |
| PIPING/VALVE/ROLLING | 47 | 24 |
| PISTON | 153 | 6 |
| PIVOT | 66 | 5 |
| PIVOT/DIAL | 108 | 7 |
| PLANTINGARM/K/L ASSY | 124 | 20 |
| | 124 | 20-A |
| PLANTINGARM/K/R ASSY | 125 | 20 |
| | 125 | 20-A |
| PLANTINGSEAL | 154 | 9 |
| | 155 | 9 |
| PLATE | 5 | 7 |
| | 20 | 21 |
| | 126 | 7 |

| Description | Fig. | Key |
|---|---|---|
| PLATE | 126 | 38 |
| | 129 | 5 |
| | 130 | 21 |
| PLATE, CONNECTING | 129 | 21 |
| PLATE, DISC | 14 | 8 |
| PLATE, RAIL/OUTER | 126 | 52 |
| PLATE, RUBBER/20X25X0 | 114 | 9 |
| PLATE, RUBBER/20X30X0 | 47 | 30 |
| PLATE, SEPARATER | 14 | 9 |
| PLATE, STOPPER | 126 | 62 |
| PLATE/0.8 | 156 | 5 |
| PLATE/1.6 | 156 | 4 |
| PLATE/1R/13X280 | 126 | 71 |
| PLATE/ADJUST/D COMP | 108 | 1 |
| PLATE/ADJUSTER/HST | 9 | 31 |
| PLATE/ARM/ROTOR/8 | 95 | 28 |
| PLATE/ARM/SUBSTEP | 74 | 13 |
| | 75 | 13 |
| PLATE/BRAKE/CONNECT | 40 | 26 |
| PLATE/BRAKE/OUTER/LH | 40 | 24 |
| | 40 | 24-A |
| PLATE/BRAKE/OUTER/RH | 40 | 25 |
| | 40 | 25-A |
| PLATE/CABLE COMP | 93 | 12 |
| PLATE/CABLE/HOLDER | 35 | 62 |
| | 35 | 62-A |
| | 35 | 62-B |
| | 36 | 58 |
| | 36 | 58-A |
| | 36 | 58-B |
| PLATE/CAPSULE | 113 | 28 |
| | 113 | 64 |
| PLATE/CAUTION | 2 | 36 |
| PLATE/CENTER/FLOAT | 104 | 2 |
| | 147 | 22 |
| PLATE/CLUTCH/7/ COMP | 131 | 39 |
| PLATE/CLUTCH/RH COMP | 131 | 37 |
| PLATE/CLUTCH/ROTOR | 92 | 11 |
| PLATE/COUNTER/BRAKE/ | 39 | 27 |
| PLATE/COUNTER/CHANGE | 7 | 24 |
| PLATE/COVER/GEAR | 64 | 17 |
| | 67 | 17 |
| | 68 | 16 |
| PLATE/COVER/GEAR/RH | 64 | 48 |
| | 67 | 48 |

| Description | Fig. | Key |
|---|---|---|
| PLATE/COVER/GEAR/RH | 68 | 47 |
| PLATE/COVER/GEAR/S | 64 | 19 |
| | 64 | 50 |
| | 67 | 19 |
| | 67 | 50 |
| | 68 | 18 |
| | 68 | 49 |
| PLATE/COVER/ROCK/PQZ | 63 | 10 |
| PLATE/F/LH | 149 | 16 |
| PLATE/F/RH | 149 | 17 |
| PLATE/FLANGE/HST | 6 | 12 |
| PLATE/FOUR BRAKE HOL | 14 | 12 |
| | 15 | 26 |
| PLATE/FULCRUM/DRIVE/ | 108 | 57 |
| PLATE/GUARD/LH COMP | 149 | 13 |
| PLATE/GUARD/RH COMP | 149 | 14 |
| PLATE/GUIDE/DEPTH | 119 | 18 |
| PLATE/GUIDE/E16 COMP | 129 | 37 |
| PLATE/GUIDE/PICKING | 119 | 19 |
| PLATE/HOLDER | 107 | 3 |
| PLATE/HOLDER/COUNTER | 39 | 12 |
| PLATE/HOLDER/DEPTH | 103 | 2 |
| PLATE/HOLDER/PLANTIN | 120 | 2 |
| PLATE/HOLDER/ROTOR | 95 | 20 |
| PLATE/HOOK | 121 | 17-A |
| PLATE/HOOK/FLOAT | 121 | 16 |
| PLATE/HOOK/SEEDLING | 126 | 29 |
| PLATE/I/14X40 | 111 | 15 |
| PLATE/I/24X64 | 95 | 19 |
| | 100 | 8 |
| | 101 | 7 |
| | 102 | 7 |
| | 116 | 4 |
| | 119 | 4 |
| PLATE/I/25X470 | 112 | 5 |
| PLATE/I/30X260 | 149 | 18 |
| PLATE/INDICATOR | 100 | 57 |
| PLATE/IR/16X211 | 113 | 93 |
| PLATE/L/12X30 | 130 | 19 |
| PLATE/L/25X50 COMP | 40 | 29 |
| PLATE/LID | 101 | 11 |
| PLATE/LINK/SENSOR | 99 | 6 |
| | 147 | 7 |
| PLATE/LOCK/COVER/ENG | 63 | 14 |
| PLATE/MAGNET/NP | 55 | 5 |

# Alpabetical Index

2233-097-110-10


| Description | Fig. | Key |
|---|---|---|
| PLATE/MAGNET/NP | 56 | 4 |
| PLATE/MIRROR COMP | 66 | 8 |
| PLATE/MONITOR | 90 | 48 |
| PLATE/OUTER COMP | 91 | 20 |
| PLATE/PEDAL/CONNECT/ | 40 | 6 |
| PLATE/PLANTING CLUTC | 18 | 31 |
| PLATE/POTENTIOMETER/ | 9 | 7 |
| PLATE/RAIL/8LH | 129 | 11 |
| PLATE/RAIL/8RH | 129 | 7 |
| PLATE/REFLECTOR/RH | 128 | 1 |
| PLATE/REINFORCEMENT/ | 126 | 42 |
| PLATE/RETURN/LEVER | 39 | 9 |
| PLATE/ROD | 39 | 21 |
| PLATE/SEAT/PZ/8 | 73 | 4 |
| PLATE/SEEDLING FEED | 126 | 39 |
| PLATE/SEEDLINGTANK | 130 | 17 |
| PLATE/SENSOR/FLOAT | 99 | 15 |
| | 147 | 25 |
| PLATE/SHUTTERCOVER | 157 | 29 |
| | 157 | 29-A |
| | 158 | 27 |
| | 158 | 27-A |
| | 159 | 29 |
| | 160 | 27 |
| PLATE/SLIDER | 129 | 26 |
| PLATE/SLIDER/HOOK | 129 | 25 |
| PLATE/SOIL COVERING/ | 115 | 25 |
| | 115 | 25-A |
| | 115 | 26 |
| | 115 | 27 |
| | 115 | 27-A |
| | 115 | 28 |
| PLATE/SPACER/COVER | 63 | 7 |
| PLATE/SPACER/LH | 72 | 5 |
| PLATE/SPACER/RH | 72 | 6 |
| PLATE/SPRING | 153 | 43 |
| PLATE/STAY/STEP/FRON | 58 | 19 |
| | 59 | 19 |
| PLATE/STAY/SWITCH | 90 | 2 |
| PLATE/STEP/CENTER | 58 | 20 |
| | 59 | 20 |
| PLATE/STOPPER/FLOAT | 121 | 19 |
| PLATE/STOPPER/RAIL | 129 | 42 |
| PLATE/STOPPER/TANK/8 | 129 | 33 |
| PLATE/SUPPORT/STEP | 62 | 7 |
| PLATE/SUPPORT/Y/LH | 112 | 3 |
| PLATE/SUPPORT/Y/RH | 112 | 4 |
| PLATE/SWASH | 153 | 4 |
| PLATE/SWITCH/E16/NP | 79 | 40 |
| | 80 | 39 |
| | 80 | 39-A |
| | 81 | 40 |
| PLATE/U/24X60 | 111 | 28 |
| PLATE/VALVE/MOTOR | 153 | 9 |
| PLATE/VALVE/PUMP | 153 | 8 |
| PLATE/Z/18X149 | 112 | 2 |
| PLATE/Z/24X40 | 108 | 29 |
| PLATESPLINE1.6 | 156 | 12 |
| PLUG | 47 | 8 |
| | 100 | 5 |
| | 101 | 13 |
| | 116 | 29 |
| | 152 | 4 |
| PLUG(G3/8) | 153 | 25 |
| PLUG(PF1/4) | 153 | 26 |
| PLUG,CAP/62X6 | 116 | 2 |
| PLUG,OIL | 33 | 6 |
| | 34 | 6 |
| | 35 | 6 |
| | 36 | 6 |
| PLUG/25X08 | 34 | 36 |
| | 36 | 36 |
| PLUG/47 | 18 | 11 |
| | 34 | 37 |
| | 36 | 37 |
| | 116 | 17 |
| | 148 | 6 |
| PLUG/BOA/42 | 96 | 5 |
| | 96 | 27 |
| PLUG/SCREW/SEAL | 11 | 10 |
| | 11 | 13 |
| | 26 | 27 |
| | 33 | 7 |
| | 34 | 7 |
| | 35 | 7 |
| | 36 | 7 |
| | 53 | 9 |
| | 53 | 15 |
| | 152 | 17 |
| POPPET(CHECK/1.6) | 153 | 23 |
| POPPET/CHECK | 153 | 22 |
| POPPET/RELIEF | 153 | 21 |
| PRESSURECAP | 2 | 4 |
| PROTECTOR | 9 | 33 |
| | 37 | 20 |
| | 38 | 21 |
| | 90 | 52 |
| PROTECTOR,ENGINE | 47 | 31 |
| PULLEY,TENSION/70BS | 4 | 9 |
| PULLEY/VC125 | 8 | 9 |
| PULLEY/VC140 | 3 | 1 |
| PUMP/FUEL ASSY | 5 | 13 |
| PUMP/OILSET | 118 | 1 |
| PUMP/PZ | 45 | 1 |
| PUSHINGOUTNUT/E | 154 | 11 |
| | 155 | 11 |
| PUSHNUT/08/SUS | 113 | 90 |
| RADIATOR ASSY | 2 | 1 |
| RADIATOR/SUB ASSY | 2 | 2 |
| RAIL/LOWER/8 COMP | 126 | 5 |
| RAIL/PLANTING/8 | 98 | 1 |
| RAIL/SEEDLING TANK/I | 126 | 32 |
| RAIL/SEEDLINNG UPPER | 126 | 4 |
| RAIL_NAE_TANK/CENTER | 129 | 1 |
| RAKE/CENTER | 107 | 8 |
| RAKE/CENTER COMP | 107 | 1 |
| RAKE/SIDE | 107 | 9 |
| RAKE/SIDE COMP | 107 | 2 |
| REAR STEP | 74 | 10 |
| | 75 | 10 |
| RELAY ASSY | 82 | 10 |
| | 82 | 22 |
| | 83 | 10 |
| | 83 | 22 |
| RELAY,TWIN | 82 | 9 |
| | 83 | 9 |
| RELAY/4P ASSY | 82 | 23 |
| | 83 | 23 |
| | 90 | 34 |
| RELAY/FLASHER ASSY | 79 | 48 |
| | 80 | 47 |
| | 81 | 48 |
| RELAY/TWIN | 82 | 9-A |
| | 83 | 9-A |
| REMAINDER/SHOOT COMP | 111 | 19 |

| Description | Fig. | Key |
|---|---|---|
| RESERVETANK | 2 | 26-A |
| RETAINING RING/E TYP | 131 | 28 |
| RING, SNAP | 20 | 6 |
| | 108 | 60 |
| | 113 | 21 |
| | 113 | 31 |
| | 113 | 57 |
| | 113 | 67 |
| | 113 | 82 |
| | 157 | 14 |
| | 158 | 12 |
| | 159 | 14 |
| | 160 | 12 |
| RING,SNAP/10 C | 126 | 70 |
| RING,SNAP/12 C | 91 | 8 |
| | 95 | 15 |
| | 95 | 35 |
| | 116 | 54 |
| | 122 | 16 |
| RING,SNAP/14 C | 16 | 10 |
| RING,SNAP/15 C | 4 | 10 |
| | 39 | 30 |
| | 44 | 29 |
| | 52 | 8 |
| | 64 | 7 |
| | 64 | 39 |
| | 67 | 7 |
| | 67 | 39 |
| | 68 | 6 |
| | 68 | 38 |
| | 91 | 12 |
| | 95 | 10 |
| RING,SNAP/17 C | 9 | 28 |
| | 96 | 12 |
| | 96 | 22 |
| | 96 | 32 |
| | 96 | 39 |
| | 153 | 39 |
| RING,SNAP/18 C | 100 | 28 |
| RING,SNAP/20 C | 33 | 40 |
| | 35 | 40 |
| | 100 | 12 |
| | 116 | 8 |
| | 116 | 11 |
| | 116 | 14 |
| RING,SNAP/20 C | 148 | 4 |
| | 148 | 10 |
| | 148 | 16 |
| | 153 | 29 |
| RING,SNAP/22 C | 17 | 9 |
| RING,SNAP/25 C | 33 | 11 |
| | 33 | 43 |
| | 34 | 11 |
| | 34 | 32 |
| | 34 | 40 |
| | 35 | 11 |
| | 35 | 43 |
| | 36 | 11 |
| | 36 | 32 |
| | 36 | 40 |
| | 108 | 55 |
| | 123 | 7 |
| RING,SNAP/28 C | 33 | 15 |
| | 34 | 15 |
| | 35 | 15 |
| | 36 | 15 |
| RING,SNAP/30 C | 153 | 38 |
| RING,SNAP/32 C | 30 | 2 |
| | 153 | 31 |
| RING,SNAP/35 C | 95 | 25 |
| | 116 | 22 |
| RING,SNAP/40 C | 23 | 4 |
| | 32 | 3 |
| | 96 | 11 |
| | 96 | 17 |
| | 96 | 23 |
| | 96 | 35 |
| | 96 | 38 |
| RING,SNAP/47 C | 15 | 15 |
| | 18 | 10 |
| | 31 | 11 |
| | 33 | 39 |
| | 34 | 38 |
| | 35 | 39 |
| | 36 | 38 |
| | 100 | 11 |
| | 116 | 15 |
| | 153 | 30 |
| RING,SNAP/52 C | 18 | 23 |
| | 26 | 6 |
| RING,SNAP/52 C | 33 | 10 |
| | 34 | 10 |
| | 35 | 10 |
| | 36 | 10 |
| RING,SNAP/6 E | 131 | 29 |
| | 131 | 70 |
| RING,SNAP/8 E | 91 | 18 |
| RING,SNAP/R55 | 8 | 20 |
| | 100 | 18 |
| RING,SNAP/R62 | 18 | 24 |
| | 23 | 12 |
| | 33 | 34 |
| | 34 | 34 |
| | 35 | 34 |
| | 36 | 34 |
| | 95 | 26 |
| RING,SNAP/R72 | 15 | 3 |
| | 26 | 24 |
| RING,SNAP/R85 | 26 | 11 |
| RING,SNAP/S45 | 26 | 10 |
| RING,STOP/30 | 26 | 41 |
| RING/O | 11 | 8 |
| RING/SNAP | 131 | 5 |
| RIVET | 77 | 9 |
| RIVET,BLIND/4X8.6 | 55 | 6 |
| | 56 | 5 |
| RIVET,POP | 126 | 6 |
| RIVET/BLIND/O | 157 | 11 |
| | 158 | 9 |
| | 159 | 11 |
| | 160 | 9 |
| RIVET/BLIND/STEEL/3. | 58 | 3 |
| | 59 | 3 |
| RIVET/STEM/3.2X | 126 | 11 |
| | 126 | 20 |
| ROD | 106 | 5 |
| ROD,ADJUST/90 | 4 | 12 |
| ROD,JOINT/ARM | 126 | 59 |
| ROD/121 | 112 | 17 |
| ROD/ACCELERATOR/NP | 10 | 13 |
| ROD/ANGLE | 99 | 17 |
| | 147 | 14 |
| ROD/BRAKE/LOWER/NP | 39 | 31 |
| ROD/BRAKE/UPPER/NP | 39 | 19 |
| ROD/CHANGE/LOWER/NP | 7 | 26 |

# Alpabetical Index

2233-097-110-10


| Description | Fig. | Key |
|---|---|---|
| ROD/CHANGE/NP COMP | 7 | 17 |
| ROD/CLUTCH COMP | 25 | 4 |
| ROD/CLUTCH/ROTOR | 92 | 4 |
| | 93 | 4 |
| ROD/COUNTER/DISCHARG | 111 | 35 |
| ROD/DIALADJUST | 108 | 9 |
| ROD/DISCHARGE | 111 | 25 |
| ROD/DRIVE/NP COMP | 108 | 62 |
| ROD/FLOAT | 99 | 23 |
| | 147 | 20 |
| ROD/HST/NP COMP | 9 | 11 |
| ROD/LAKE COMP | 107 | 6 |
| ROD/LINK | 99 | 10 |
| | 147 | 11 |
| ROD/MARKER/WATER WHE | 122 | 3 |
| ROD/PISTON/029 SET | 152 | 11 |
| | 152 | 11-A |
| ROD/PLANTING | 20 | 2 |
| | 20 | 9 |
| ROD/PLANTING CLUTCH/ | 52 | 16 |
| ROD/ROTOR | 92 | 15 |
| ROD/ROTOR/L | 92 | 16 |
| ROD/SHUTTER | 111 | 17 |
| ROD/STOPPER/FLOAT | 121 | 23 |
| ROD/TENSIONER | 116 | 44 |
| ROD/TIECOMP | 24 | 1 |
| ROHTO | 115 | 3 |
| ROLL | 113 | 15 |
| | 113 | 51 |
| ROLL/FERTILIZE ASSY | 113 | 10-A |
| | 113 | 46-A |
| ROLLER | 50 | 8 |
| ROLLER, SEEDLING TANK | 119 | 14 |
| ROLLER, SEEDLING, UPPE | 131 | 33 |
| ROLLER/08X14X17 | 50 | 8-A |
| ROLLER/ROTOR/8 | 94 | 9 |
| ROLLER/SEEDLING | 131 | 25 |
| ROLLER/SEEDLINNG | 131 | 24 |
| ROLLER44 | 64 | 26 |
| | 64 | 58 |
| | 67 | 26 |
| | 67 | 58 |
| | 68 | 25 |
| | 68 | 57 |
| ROLLERCLUTCH/HF1816 | 131 | 3 |
| ROTARY PLANTING/K/LH | 124 | 1 |
| | 124 | 1-A |
| | 124 | 1-B |
| ROTARY PLANTING/K/RH | 125 | 1 |
| | 125 | 1-A |
| | 125 | 1-B |
| ROTOR/36/M | 94 | 4 |
| | 94 | 19 |
| ROTOR/72/M | 94 | 3 |
| | 94 | 18 |
| RUBBERBAND | 112 | 46 |
| SAFETY CLUTCH/NP/CEN | 116 | 9 |
| | 148 | 7 |
| | 148 | 8 |
| SAFETY CLUTCH/NP/LH | 116 | 6 |
| | 148 | 1 |
| | 148 | 2 |
| SAFETY CLUTCH/NP/RH | 116 | 12 |
| | 148 | 13 |
| | 148 | 14 |
| SCREW | 89 | 29 |
| SCREW, FLAT/M6X20 | 129 | 22 |
| | 129 | 38 |
| SCREW, FLAT/M8X20 | 129 | 12 |
| SCREW, SEMS/M4X12 | 90 | 36 |
| SCREW, SEMS/M4X16 | 44 | 15 |
| SCREW, SEMS/M5X10 | 129 | 2 |
| SCREW, SEMS/M5X16 | 15 | 21 |
| SCREW, SET/HEX. SOCKET | 44 | 19 |
| | 44 | 30 |
| SCREW, SET/M6X12 | 108 | 51 |
| SCREW, SOCKET/M10X35 | 153 | 41 |
| SCREW, SOCKET/M8X25 | 53 | 19 |
| SCREW, SP/M4X10 | 6 | 20 |
| | 9 | 6 |
| | 23 | 19 |
| | 40 | 11 |
| | 44 | 35 |
| | 51 | 9 |
| | 52 | 10 |
| | 91 | 24 |
| | 95 | 12 |
| | 99 | 14 |
| | 106 | 8 |
| | 122 | 24 |
| SCREW, SP/M4X10 | 147 | 24 |
| SCREW, SP/M4X12 | 126 | 28 |
| SCREW, SP/M4X8 | 126 | 27 |
| SCREW, SP/M5X16 | 64 | 21 |
| | 64 | 53 |
| | 67 | 21 |
| | 67 | 53 |
| | 68 | 20 |
| | 68 | 52 |
| | 89 | 26 |
| | 95 | 5 |
| SCREW, SP/M5X25 | 79 | 46 |
| | 80 | 45 |
| | 81 | 46 |
| SCREW, SP/M6X12 | 6 | 3 |
| SCREW, SP/M6X16 | 57 | 2 |
| | 64 | 15 |
| | 64 | 47 |
| | 67 | 15 |
| | 67 | 47 |
| | 68 | 14 |
| | 68 | 46 |
| | 79 | 31 |
| | 80 | 30 |
| | 81 | 31 |
| SCREW, SP/M6X25 | 124 | 4 |
| | 125 | 4 |
| SCREW, SP/M6X30 | 154 | 5 |
| | 155 | 5 |
| SCREW, SP/M8X20 | 107 | 10 |
| SCREW, TAPPING | 109 | 6 |
| SCREW, TAPPING/M3 | 112 | 8 |
| SCREW/04 | 108 | 21 |
| SCREW/6 | 115 | 24 |
| SCREW/M05X12 | 79 | 53 |
| SCREW/M3X | 112 | 28 |
| SCREW/M3X12 | 40 | 20 |
| | 157 | 37 |
| | 158 | 35 |
| | 159 | 37 |
| | 160 | 35 |
| SCREW/M3X16 | 6 | 31 |
| | 7 | 14 |
| | 90 | 8 |
| | 92 | 25 |

| Description | Fig. | Key |
|---|---|---|
| SCREW/M3X16 | 109 | 12 |
| | 111 | 45 |
| | 133 | 9 |
| SCREW/M3X20 | 20 | 18 |
| | 100 | 32 |
| SCREW/M3X6 | 157 | 30 |
| | 158 | 28 |
| | 159 | 30 |
| | 160 | 28 |
| SCREW/M4X10 | 113 | 5 |
| | 113 | 41 |
| SCREW/M4X12 | 157 | 40 |
| | 158 | 38 |
| | 159 | 40 |
| | 160 | 38 |
| SCREW/M5X10 | 108 | 17 |
| | 112 | 13 |
| SCREW/M5X12 | 110 | 5 |
| SCREW/M6X16 | 114 | 8 |
| SCREW/M8X35 | 74 | 7 |
| | 75 | 7 |
| SCREW/SET | 117 | 2 |
| SCREW/TAPPING | 73 | 3 |
| | 78 | 8 |
| | 90 | 45 |
| | 113 | 5-A |
| | 113 | 30-A |
| | 113 | 41-A |
| | 113 | 66-A |
| | 126 | 26 |
| | 126 | 72 |
| | 157 | 35 |
| | 158 | 33 |
| | 159 | 35 |
| | 160 | 33 |
| SCREW/TAPPING/6X16 | 79 | 30 |
| | 80 | 29 |
| | 81 | 30 |
| SCREW/TAPPING/M4X12 | 113 | 30 |
| | 113 | 66 |
| SCREW/TRUSS/M8X40 | 55 | 4 |
| SEAL, DUST | 152 | 14 |
| SEAL, OIL | 100 | 40 |
| | 116 | 55 |
| | 124 | 7 |
| SEAL, OIL | 124 | 15 |
| | 125 | 7 |
| | 125 | 15 |
| | 154 | 6 |
| | 155 | 6 |
| SEAL, OIL 305514 | 26 | 44 |
| SEAL, OIL/SC17306 | 116 | 35 |
| SEAL, OIL/SDD7/204 | 33 | 30 |
| | 33 | 41 |
| | 34 | 31 |
| | 35 | 30 |
| | 35 | 41 |
| | 36 | 31 |
| SEAL, OIL/TC12227 | 18 | 34 |
| | 19 | 2 |
| | 19 | 9 |
| | 19 | 15 |
| | 23 | 15 |
| | 100 | 30 |
| SEAL, OIL/TC12257 | 33 | 44 |
| | 34 | 41 |
| | 35 | 44 |
| | 36 | 41 |
| SEAL, OIL/TC15307 | 113 | 18 |
| | 113 | 54 |
| SEAL, OIL/TC17307 | 100 | 39 |
| SEAL, OIL/TC17357 | 33 | 25 |
| | 34 | 26 |
| | 35 | 25 |
| | 36 | 26 |
| | 116 | 23 |
| | 148 | 5 |
| | 148 | 12 |
| SEAL, OIL/TC17408 | 32 | 4 |
| SEAL, OIL/TC20307 | 113 | 12 |
| | 113 | 48 |
| SEAL, OIL/TC20407 | 17 | 3 |
| SEAL, OIL/TC20477 | 15 | 16 |
| | 100 | 13 |
| | 116 | 16 |
| | 148 | 11 |
| | 148 | 17 |
| | 153 | 34 |
| SEAL, OIL/TC25357 | 14 | 15 |
| | 15 | 24 |
| SEAL, OIL/TC25357 | 18 | 30 |
| | 21 | 2 |
| | 108 | 56 |
| SEAL, OIL/TC25457 | 100 | 51 |
| SEAL, OIL/TC25478 | 15 | 12 |
| SEAL, OIL/TC255210 | 26 | 7 |
| SEAL, OIL/VC12224 | 44 | 6 |
| SEAL, OIL/VC25355 | 44 | 5 |
| SEAL, WHEEL SHAFT | 33 | 56 |
| | 34 | 52 |
| | 35 | 56 |
| | 36 | 52 |
| SEAL/47 | 153 | 35 |
| SEAL/DUST/92X104X8 | 26 | 15 |
| SEAL/OIL | 18 | 25 |
| | 23 | 13 |
| | 33 | 35 |
| | 34 | 35 |
| | 35 | 35 |
| | 36 | 35 |
| | 95 | 27 |
| | 96 | 13 |
| | 96 | 18 |
| | 96 | 20 |
| | 96 | 33 |
| | 96 | 40 |
| | 153 | 33 |
| SEAT/NP ASSY | 73 | 1 |
| SEEDLING FRAME/4/LH/ | 65 | 1 |
| SEEDLING FRAME/4/RH/ | 65 | 2 |
| SEEDLING FRAME/BASE/ | 64 | 1 |
| | 64 | 33 |
| | 67 | 1 |
| | 67 | 33 |
| | 68 | 1 |
| SEEDLING FRAME/MASE/ | 68 | 32 |
| SEEDLING FRAME/SLIDE | 64 | 4 |
| | 64 | 5 |
| | 64 | 6 |
| | 64 | 36 |
| | 64 | 37 |
| | 64 | 38 |
| | 67 | 4 |
| | 67 | 5 |
| | 67 | 6 |

# Alpabetical Index

2233-097-110-10


| Description | Fig. | Key |
|---|---|---|
| SEEDLING FRAME/SLIDE | 67 | 36 |
| | 67 | 37 |
| | 67 | 38 |
| | 68 | 3 |
| | 68 | 4 |
| | 68 | 5 |
| | 68 | 35 |
| | 68 | 36 |
| | 68 | 37 |
| SEEDLING HOLDER/1LIN | 130 | 5 |
| SEEDLING HOLDER/2LIN | 130 | 4 |
| SEEDLING HOLDER/5/PG | 130 | 3 |
| SEEDLING TANK/CENTER | 126 | 1 |
| SEEDLING TANK/LH/E12 | 126 | 15 |
| SEEDLINGFRAME/SLIDER | 64 | 24 |
| | 64 | 56 |
| | 67 | 24 |
| | 67 | 56 |
| | 68 | 23 |
| | 68 | 55 |
| SEEDLINGHOLDER | 150 | 1 |
| SEEDLINGTANK | 126 | 2 |
| SEEDLINGTANK/EXTEND | 132 | 1 |
| SEEDLINGTANK/LH | 126 | 3 |
| SENSOR ARM/LEVER/HST | 6 | 21 |
| SENSOR ASSY | 40 | 17 |
| SENSOR,HOPPPER | 109 | 11 |
| SENSOR/ANGLE/110/R | 6 | 19 |
| | 51 | 8 |
| | 99 | 13 |
| | 106 | 7 |
| | 122 | 23 |
| SENSOR/ANGLE/330 | 23 | 16 |
| | 44 | 34 |
| | 91 | 22 |
| SENSOR/ANGLE/75 ASSY | 9 | 5 |
| | 52 | 9 |
| | 95 | 11 |
| SENSOR/ANGULAR VELOC | 82 | 29 |
| | 83 | 29 |
| SENSOR/CLOGGED/NP | 109 | 8 |
| SENSOR/GNSS ASSY | 89 | 23 |
| SENSOR/GNSSSET | 89 | 22 |
| SENSOR/SLOPE ASSY | 100 | 53 |
| SENSOR/SPEED/GEAR | 15 | 20 |
| SENSOR/SPEED/GEAR | 110 | 1 |
| SENSOR/STOP SWITCH | 126 | 14 |
| SENSORARM/HST/NP | 9 | 9 |
| SENSORARM/LINK | 51 | 10 |
| SHAFT | 131 | 32 |
| SHAFT,SEEDLING | 131 | 68 |
| SHAFT/CENTER ROTOR/D | 96 | 6 |
| | 96 | 28 |
| SHAFT/CHANGE | 14 | 1 |
| | 18 | 1 |
| SHAFT/CHANGE/SUB | 17 | 4 |
| SHAFT/COUNTER COMP | 108 | 33 |
| SHAFT/COUNTER/41-9 | 33 | 50 |
| | 34 | 46 |
| | 35 | 50 |
| | 36 | 46 |
| SHAFT/COUNTER/8 COMP | 13 | 1 |
| SHAFT/COUNTER/SEND | 100 | 37 |
| SHAFT/DIFF | 16 | 3 |
| | 16 | 3-A |
| SHAFT/DIFFLOCK/NP | 21 | 1 |
| SHAFT/DISCHARGE | 113 | 33 |
| | 113 | 33-A |
| | 113 | 69 |
| | 113 | 69-A |
| SHAFT/DISCHARGE/8 | 111 | 36 |
| SHAFT/DRIVE/6 | 117 | 4 |
| SHAFT/DRIVE/8 | 117 | 5 |
| SHAFT/DRIVEN | 18 | 8 |
| SHAFT/FERTILIZE | 33 | 37 |
| | 35 | 37 |
| SHAFT/FERTILIZE/6RH | 113 | 75 |
| SHAFT/FERTILIZE/8RH | 113 | 76 |
| SHAFT/FORK/PLANTING/ | 154 | 25 |
| | 155 | 25 |
| SHAFT/FOUR WHEEL BRA | 14 | 14 |
| SHAFT/FRONTDRIVE/LH | 16 | 13 |
| SHAFT/FRONTDRIVE/RH | 16 | 19 |
| SHAFT/FRONTWHEEL | 26 | 39 |
| SHAFT/INPUT/8D COMP | 12 | 1 |
| SHAFT/JOINT/PLANT | 31 | 2 |
| SHAFT/KINGPIN/8 | 26 | 28 |
| SHAFT/MOTOR | 153 | 11 |
| SHAFT/OUTPUT/ROTOR | 33 | 22 |
| | 34 | 23 |
| SHAFT/OUTPUT/ROTOR | 35 | 22 |
| | 36 | 23 |
| SHAFT/PLANT/FRONT/12 | 31 | 1 |
| SHAFT/PLANT/OUT | 18 | 20 |
| SHAFT/PLANT/REA COMP | 31 | 6 |
| SHAFT/PLANTING ARM/L | 124 | 10 |
| SHAFT/PLANTING ARM/R | 125 | 10 |
| SHAFT/PLANTING/IN | 100 | 9 |
| SHAFT/PLANTINGARM | 116 | 30 |
| SHAFT/PUMP | 153 | 10 |
| SHAFT/REAR/WHEEL/8 | 33 | 53 |
| | 34 | 49 |
| | 35 | 53 |
| | 35 | 53-A |
| | 36 | 49 |
| | 36 | 49-A |
| SHAFT/REARCLUTCH/8 | 15 | 7 |
| SHAFT/RESISTANCE/8/C | 130 | 25 |
| SHAFT/RETURN/LEVER | 39 | 11 |
| SHAFT/RIDGE CLUTCH/C | 91 | 5 |
| SHAFT/ROLLER CLUTCH/ | 131 | 2 |
| SHAFT/ROTOR/8 | 94 | 12 |
| SHAFT/ROTOR/8/CENTER | 94 | 1 |
| SHAFT/ROTOR/FRONT | 96 | 9 |
| | 96 | 31 |
| SHAFT/ROTOR/FRONT/8 | 92 | 6 |
| | 93 | 6 |
| SHAFT/ROTOR/REAR/LH | 96 | 14 |
| SHAFT/ROTOR/REAR/NP | 92 | 5 |
| | 93 | 5 |
| SHAFT/ROTOR/REAR/RH | 96 | 36 |
| SHAFT/SEEDLINGFEED/1 | 131 | 20 |
| SHAFT/SEEDLINGFEED/2 | 131 | 19 |
| SHAFT/SEEDLINGFEED/8 | 131 | 18 |
| SHAFT/SEEDRING FEED/ | 131 | 30 |
| | 131 | 31 |
| SHAFT/SENCER/STEERIN | 23 | 14 |
| SHAFT/SEND | 100 | 15 |
| SHAFT/STEARING/OUT | 23 | 9 |
| SHAFT/STEERING/IN | 23 | 1 |
| SHAFT/STEERING/NP | 37 | 6 |
| | 37 | 6-A |
| SHAFT/STEERING/NPZ | 38 | 6 |
| SHEET/HOPPER/8 | 157 | 5 |
| | 158 | 5 |

| Description | Fig. | Key |
|---|---|---|
| SHEET/HOPPER/8 | 159 | 5 |
| | 160 | 5 |
| SHEET/HOPPER/8/LOWER | 157 | 22 |
| | 157 | 22-A |
| | 158 | 20 |
| | 158 | 20-A |
| | 159 | 22 |
| | 160 | 20 |
| SHEET/HOPPER/8/REAR | 157 | 25 |
| | 157 | 25-A |
| | 159 | 25 |
| SHEET/HOPPER/8RH/REA | 158 | 23 |
| | 160 | 23 |
| SHFTER/CHANGE/DRIVE | 19 | 1 |
| SHIFTER/CHANGE/NP | 7 | 28 |
| SHIFTER/CLUTCH/REVER | 18 | 29 |
| SHIFTER/FERTILIZER | 33 | 42 |
| | 34 | 39 |
| | 35 | 42 |
| | 36 | 39 |
| SHIFTER/PLANTING/MEI | 19 | 8 |
| SHIFTER/PLANTING/SUB | 19 | 14 |
| SHIFTER/SEND COMP | 100 | 29 |
| SHIFTER/SEND/3 COMP | 100 | 29-A |
| SHIM, NEEDLE SHAFT | 9 | 30 |
| SHIM, SAFETY CLUTCH | 100 | 42 |
| SHIM/1.8 | 153 | 7 |
| SHIM/35X47X0.2 | 100 | 14 |
| SHIM/MUFFLER | 1 | 21 |
| | 1 | 22 |
| | 89 | 27 |
| SHROUDFAN ASSY | 2 | 6 |
| SHUTTER | 157 | 27 |
| | 157 | 27-A |
| | 158 | 25 |
| | 158 | 25-A |
| | 159 | 27 |
| | 160 | 25 |
| SHUTTER/DISCHARGE | 113 | 34 |
| | 113 | 34-A |
| | 113 | 70 |
| | 113 | 70-A |
| SIFTER/CLUTCH | 32 | 1 |
| SIM/8X16X0.3 | 108 | 43 |
| SLIDER PLATE(E12) | 126 | 23 |
| SNAPRING | 102 | 2 |
| | 108 | 8 |
| | 108 | 10 |
| SNAPRING/HOLE | 156 | 7 |
| SNAPRING/SHAFT | 156 | 8 |
| SOCKET | 78 | 3 |
| SOLENOID SET | 152 | 1 |
| SORING | 79 | 18 |
| | 80 | 17 |
| | 81 | 18 |
| SPAC/M8 | 79 | 4 |
| | 80 | 4 |
| | 81 | 4 |
| | 129 | 14 |
| SPACER, BRAKE SENSOR | 40 | 16 |
| SPACER/136 COMP | 72 | 1 |
| SPACER/OUTER/RH | 130 | 8 |
| | 130 | 42 |
| SPACER/SENSOR/ANGLE | 23 | 17 |
| | 91 | 23 |
| SPACER/STEARING | 44 | 7 |
| SPIRALTUBE/150 | 90 | 54 |
| SPLINEBOSS | 156 | 2 |
| SPOOL | 152 | 10 |
| SPRING | 70 | 14 |
| | 71 | 14 |
| | 77 | 2 |
| | 108 | 20 |
| | 108 | 20-A |
| | 113 | 103 |
| | 116 | 20 |
| | 129 | 9 |
| | 152 | 2 |
| | 152 | 9 |
| | 156 | 3 |
| SPRING, BELT/4 | 131 | 36 |
| SPRING, BELT/8 | 131 | 35 |
| SPRING, CONE | 40 | 7 |
| | 129 | 15 |
| SPRING, HC030 | 123 | 4 |
| | 131 | 73 |
| SPRING, HE071 | 9 | 39 |
| | 10 | 6 |
| SPRING/12X25X01 | 89 | 12 |
| SPRING/CHANGE/HE057 | 116 | 43 |
| SPRING/HC015 | 116 | 53 |
| SPRING/HC017 | 49 | 4 |
| SPRING/HC021 | 100 | 35 |
| | 153 | 20 |
| SPRING/HC026 | 47 | 10 |
| SPRING/HC028 | 18 | 28 |
| SPRING/HC029 | 122 | 6 |
| SPRING/HC030 | 153 | 19 |
| SPRING/HC032 | 52 | 19 |
| SPRING/HC033 | 33 | 13 |
| | 34 | 13 |
| | 35 | 13 |
| | 36 | 13 |
| SPRING/HC034 | 131 | 60 |
| SPRING/HC037 | 124 | 17 |
| | 125 | 17 |
| SPRING/HC041 | 16 | 17 |
| SPRING/HC042 | 9 | 26 |
| SPRING/HC044 | 113 | 80 |
| SPRING/HC050 | 67 | 73 |
| | 68 | 72 |
| SPRING/HC053 | 26 | 29 |
| | 153 | 18 |
| SPRING/HC054 | 26 | 30 |
| SPRING/HC058/8 | 39 | 23 |
| SPRING/HC086 | 154 | 14 |
| | 155 | 14 |
| SPRING/HC093 | 113 | 79 |
| SPRING/HC100 | 19 | 3 |
| SPRING/HC128 | 113 | 81 |
| SPRING/HC210 | 126 | 45 |
| SPRING/HE060 | 91 | 29 |
| SPRING/HE070 | 39 | 26 |
| SPRING/HE079 | 111 | 11 |
| SPRING/HE086 | 40 | 5 |
| | 40 | 15 |
| SPRING/HE089 | 4 | 11 |
| SPRING/HE104 | 131 | 7 |
| SPRING/HE114 | 52 | 15 |
| SPRING/HE130 | 65 | 16 |
| SPRING/HE15 | 44 | 28 |
| SPRING/HE232 | 105 | 1 |
| SPRING/HE240 | 95 | 38 |
| SPRING/HT008 | 111 | 29 |
| SPRING/HT012 | 39 | 16 |

# Alpabetical Index

2233-097-110-10


| Description | Fig. | Key |
|---|---|---|
| SPRING/HT012 | 67 | 64 |
| | 68 | 63 |
| SPRING/HT013 | 116 | 49 |
| | 116 | 49-A |
| SPRING/HT015 | 33 | 49 |
| | 34 | 45 |
| | 35 | 49 |
| | 36 | 45 |
| SPRING/HT015/B | 121 | 15 |
| SPRING/HT016 | 116 | 49-B |
| SPRING/HT017/S | 121 | 7 |
| SPRING/HT018 | 99 | 12 |
| | 147 | 13 |
| SPRING/HT019/LH/Z | 113 | 35 |
| SPRING/HT019/RH/Z | 113 | 71 |
| SPRING/HT020/LH | 122 | 17 |
| SPRING/HT020/RH | 122 | 18 |
| SPRING/HT025/CHANGE | 7 | 3 |
| SPRING/HT025/HST | 6 | 5 |
| SPRING/HT22 | 63 | 11 |
| SPRING/MARKER/REAR/L | 122 | 9 |
| SPRING/MARKER/REAR/R | 122 | 10 |
| SPRING/SEND/PZ8 | 100 | 27 |
| SPRING/SHIFTER/P | 19 | 6 |
| | 19 | 12 |
| | 19 | 18 |
| SPRING/STOPSWITCH | 133 | 6 |
| SPROCKET/12/DRIVE | 33 | 19 |
| | 34 | 20 |
| | 35 | 19 |
| | 36 | 20 |
| SPROCKET/12/DRIVEN | 33 | 21 |
| | 34 | 22 |
| | 35 | 21 |
| | 36 | 22 |
| SPROCKET/18 | 116 | 31 |
| SPROCKET/CLUTCH | 116 | 18 |
| STAY | 66 | 4 |
| STAY,6/M COMP | 130 | 1 |
| STAY/A | 65 | 11 |
| STAY/AIRCHAMBER COMP | 111 | 7 |
| STAY/AIRCLEANER COMP | 2 | 18 |
| STAY/ANGLE | 99 | 1 |
| | 147 | 3 |
| STAY/AZECLUTCH COMP | 116 | 46 |

| Description | Fig. | Key |
|---|---|---|
| STAY/AZECLUTCH COMP | 116 | 46-A |
| | 116 | 46-B |
| | 116 | 47 |
| | 116 | 47-A |
| STAY/B | 65 | 12 |
| STAY/BLOWER COMP | 112 | 33 |
| STAY/BRANCHVALVE | 47 | 14 |
| STAY/CAM/SEND COMP | 102 | 5 |
| STAY/CENTERFLOA COMP | 104 | 4 |
| | 104 | 5 |
| STAY/DRIVER/6Z COMP | 90 | 21 |
| STAY/DUCT/REAR COMP | 112 | 19 |
| STAY/DUCT/REAR/8LH | 112 | 20 |
| STAY/DUCT/REAR/8RH | 112 | 21 |
| STAY/DUCTGUARD COMP | 111 | 48 |
| STAY/FLOAT/CENTER | 99 | 3 |
| | 147 | 4 |
| STAY/FLOAT/SIDE/LH | 121 | 2 |
| | 121 | 10 |
| STAY/FRAME SUPPORT/C | 65 | 8 |
| STAY/FUSEBOX COMP | 90 | 22 |
| STAY/GPS COMP | 89 | 6 |
| STAY/GPS/LOWER COMP | 89 | 4 |
| STAY/GUARD PLATE/LH | 149 | 2 |
| STAY/GUARD PLATE/RH | 149 | 3 |
| STAY/HINGE/PZ | 63 | 5 |
| STAY/HOPPER/LH/ COMP | 114 | 3 |
| STAY/HOPPER/OUT COMP | 114 | 4 |
| STAY/HOPPER/RH/ COMP | 114 | 5 |
| STAY/HYDRAULIC LOCK | 146 | 2 |
| STAY/LEVER COMP | 20 | 13 |
| STAY/MINICONTROLLER | 90 | 11 |
| STAY/MIRROR COMP | 66 | 9 |
| STAY/OUTER | 65 | 17 |
| STAY/PANEL/NPZ COMP | 90 | 46 |
| STAY/RADIATOR/L COMP | 2 | 8 |
| STAY/RADIATOR/R COMP | 2 | 9 |
| STAY/RAIL COMP | 129 | 24 |
| STAY/RECEIVER/6Z | 56 | 7 |
| STAY/ROTOR | 95 | 17 |
| STAY/ROTOR/CENTER/8 | 94 | 7 |
| STAY/SEEDLING FRAME/ | 69 | 1 |
| | 69 | 5 |
| | 70 | 1 |
| | 70 | 5 |

| Description | Fig. | Key |
|---|---|---|
| STAY/SEEDLING FRAME/ | 71 | 1 |
| | 71 | 5 |
| STAY/SEEDLING HOLDER | 130 | 32 |
| STAY/SEEDLING TANK/C | 119 | 3 |
| STAY/SEEDLING TANK/E | 119 | 1 |
| | 119 | 2 |
| STAY/SENSOR COMP | 110 | 2 |
| STAY/SENSOR/SLOPE | 100 | 55 |
| | 100 | 55-A |
| STAY/SENSOR/STEERING | 23 | 20 |
| STAY/SIDE/8LH/E12 | 60 | 14 |
| | 61 | 14 |
| STAY/SIDE/8RH/E12 | 60 | 15 |
| | 61 | 15 |
| STAY/SLIDER/OUTER | 129 | 28 |
| STAY/STOPSWITCH COMP | 133 | 1 |
| STAY/SWITCH/8 COMP | 109 | 23 |
| STAY/UINKER/RH COMP | 127 | 7 |
| STAY/UPPER/LH COMP | 65 | 19 |
| STAY/UPPER/RH COMP | 65 | 20 |
| STAY/VOLUME/Z | 90 | 39 |
| STAY/WINKER/LH COMP | 127 | 6 |
| STEERING/NP ASSY | 37 | 10 |
| | 38 | 10 |
| STEP/CENTER/LH/D/NP | 58 | 7 |
| | 59 | 7 |
| STEP/CENTER/RH/D/NP | 58 | 10 |
| STEP/CENTER/RH/DF/NP | 59 | 10 |
| STEP/FRONT/NP | 58 | 1 |
| | 59 | 1 |
| STEP/REAR/NP | 62 | 1 |
| STEP/SEE THROUGH/REA | 60 | 12 |
| | 61 | 12 |
| STEP/SEE THROUGH/SID | 60 | 10 |
| | 61 | 10 |
| STEP/SEETHROUGH | 60 | 9 |
| | 61 | 9 |
| STEP/SEETHROUGH/NP | 58 | 8 |
| | 58 | 11 |
| | 59 | 8 |
| | 59 | 11 |
| STEP/SIDE/F/LH COMP | 61 | 5 |
| STEP/SIDE/F/RH COMP | 61 | 6 |
| STEP/SIDE/LH COMP | 60 | 1 |
| | 60 | 1-A |

# Alpabetical Index




| Description | Fig. | Key |
|---|---|---|
| STEP/SIDE/LH COMP | 61 | 1 |
| | 61 | 1-A |
| STEP/SIDE/REAR/LH | 60 | 5 |
| STEP/SIDE/REAR/RH | 60 | 6 |
| STEP/SIDE/RH COMP | 60 | 2 |
| | 60 | 2-A |
| | 61 | 2 |
| | 61 | 2-A |
| STOPPER,SEED/6/K | 130 | 6 |
| STOPPER/LAMP/HOOD/LH | 78 | 6 |
| STOPPER/LAMP/HOOD/RH | 78 | 7 |
| STOPPER/SEEDLING FEE | 131 | 13 |
| STUD/M12X25/7T | 27 | 4 |
| STUD/M8X25 | 129 | 13 |
| SUTTER | 111 | 5 |
| SUTTERCHANGE | 111 | 4 |
| SWITCH ASSY | 126 | 25 |
| SWITCH ASSY | 6 | 29 |
| | 7 | 12 |
| | 20 | 16 |
| | 90 | 6 |
| | 92 | 23 |
| | 111 | 43 |
| | 133 | 7 |
| SWITCH,PUSH | 109 | 18 |
| SWITCH,SAFETY ASSY | 79 | 35 |
| | 80 | 34 |
| | 81 | 35 |
| SWITCH/COMBINATION | 79 | 34 |
| | 80 | 33-A |
| | 81 | 34 |
| SWITCH/CONTROLLER/E1 | 79 | 11 |
| | 80 | 11 |
| | 81 | 11 |
| SWITCH/CONTROLLER/NP | 79 | 12 |
| | 80 | 12 |
| | 81 | 12 |
| SWITCH/MAIN ASSY | 79 | 23 |
| | 80 | 22 |
| | 81 | 23 |
| SWITCH/MANUAL ASSY | 79 | 49 |
| SWITCH/MOMENTARY/G/W | 79 | 15 |
| | 80 | 14 |
| | 81 | 15 |
| SWITCH/POWER TRAIN S | 79 | 14 |

| Description | Fig. | Key |
|---|---|---|
| SWITCH/POWER TRAIN S | 81 | 14 |
| SWITCH/VR ASSY | 79 | 16 |
| | 80 | 15 |
| | 81 | 16 |
| | 90 | 42 |
| SWITCH/VR/NP ASSY | 79 | 26 |
| | 80 | 25 |
| | 81 | 26 |
| SWITVH/COMBI | 80 | 33 |
| SYAY/MARKER/8L COMP | 119 | 6 |
| | 119 | 6-A |
| SYAY/MARKER/8R COMP | 119 | 7 |
| | 119 | 7-A |
| TANK,RESERVE | 2 | 26 |
| TANK/FUEL/NP | 5 | 1 |
| TAPBOLT/6X20 | 28 | 2 |
| | 58 | 9 |
| | 58 | 12 |
| | 59 | 9 |
| | 59 | 12 |
| | 60 | 11 |
| | 60 | 13 |
| | 61 | 11 |
| | 61 | 13 |
| TAPPINGSCREW/M5X12 | 9 | 24 |
| | 52 | 5 |
| TAPPINGSCREW/M5X16 | 91 | 4 |
| | 122 | 21 |
| TENSIONER/CHAIN COMP | 116 | 38 |
| THRUSTCOLLAR | 156 | 9 |
| TIRE/FRONT/650/ COMP | 27 | 1 |
| TORQUEGENERATOR | 54 | 1 |
| TUBE/100 | 95 | 6 |
| TUBE/18X24 | 32 | 8 |
| TUBE/DISCHARGE/8 | 111 | 1 |
| TUBE/HANDRAIL/N COMP | 74 | 5 |
| | 75 | 5 |
| TUBE/HOSE/8 | 115 | 11 |
| TUBE/JOINT COMP | 89 | 16 |
| TUBE/MARKER/8L COMP | 122 | 1 |
| TUBE/MARKER/8R COMP | 122 | 2 |
| TUBE/REIN FORCE/Z/LH | 89 | 18 |
| TUBE/REIN FORCE/Z/RH | 89 | 19 |
| TUBE/ROLLER/8 | 94 | 10 |
| TUBE/SEEDLING PICKIN | 120 | 1 |

| Description | Fig. | Key |
|---|---|---|
| TUBE/UPPER/8A COMP | 65 | 22 |
| TURNBACKLE | 92 | 17 |
| UNIT/VALVE/CYLINDER/ | 106 | 1 |
| | 106 | 1-A |
| U-NUT | 90 | 51 |
| UNUT/M8/CAP | 79 | 6 |
| | 80 | 6 |
| | 81 | 6 |
| VALVE | 2 | 22 |
| VALVE,CONTROL | 47 | 7 |
| VALVE/KTMS6/8 SET | 53 | 1 |
| VALVE/PFV/15ASSY | 53 | 2 |
| VALVE/RELIEF/08 ASSY | 53 | 13 |
| WASHER | 1 | 20 |
| | 4 | 6 |
| | 22 | 5 |
| | 52 | 7 |
| | 52 | 17 |
| | 74 | 6 |
| | 75 | 6 |
| | 95 | 9 |
| | 95 | 14 |
| | 95 | 34 |
| WASHER,BINDING SHAFT | 129 | 10 |
| WASHER,PL/M10 | 1 | 5 |
| | 60 | 20 |
| | 61 | 20 |
| | 101 | 18 |
| | 108 | 31 |
| | 108 | 36 |
| | 108 | 44 |
| | 108 | 46 |
| | 126 | 58 |
| WASHER,PL/M12 | 1 | 10 |
| | 106 | 3 |
| | 111 | 40 |
| | 131 | 27 |
| WASHER,PL/M14 | 6 | 17 |
| WASHER,PL/M16 | 9 | 27 |
| WASHER,PL/M18 | 50 | 11 |
| | 51 | 5 |
| WASHER,PL/M3 | 6 | 33 |
| | 7 | 16 |
| | 20 | 20 |
| | 40 | 18 |

# Alpabetical Index




| Description | Fig. | Key |
|---|---|---|
| WASHER, PL/M3 | 90 | 9 |
| | 92 | 27 |
| | 109 | 13 |
| | 111 | 47 |
| | 133 | 10 |
| | 157 | 12 |
| | 157 | 32 |
| | 157 | 39 |
| | 158 | 10 |
| | 158 | 30 |
| | 158 | 37 |
| | 159 | 12 |
| | 159 | 32 |
| | 159 | 39 |
| | 160 | 10 |
| | 160 | 30 |
| | 160 | 37 |
| WASHER, PL/M4 | 20 | 7 |
| | 40 | 12 |
| | 55 | 7 |
| | 56 | 6 |
| | 108 | 23 |
| | 126 | 13 |
| | 126 | 19 |
| | 126 | 35 |
| | 157 | 8 |
| | 157 | 16 |
| | 157 | 41 |
| | 158 | 8 |
| | 158 | 14 |
| | 158 | 39 |
| | 159 | 8 |
| | 159 | 16 |
| | 159 | 41 |
| | 160 | 8 |
| | 160 | 14 |
| | 160 | 39 |
| WASHER, PL/M5 | 112 | 15 |
| WASHER, PL/M6 | 31 | 14 |
| | 33 | 70 |
| | 35 | 67 |
| | 50 | 6 |
| | 82 | 33 |
| | 83 | 33 |
| | 91 | 33 |
| WASHER, PL/M6 | 92 | 10 |
| | 92 | 21 |
| | 93 | 10 |
| | 110 | 4 |
| | 111 | 23 |
| | 113 | 95 |
| | 115 | 30 |
| | 121 | 21 |
| | 130 | 27 |
| | 130 | 34 |
| | 131 | 54 |
| | 133 | 4 |
| WASHER, PL/M8 | 6 | 6 |
| | 7 | 4 |
| | 9 | 3 |
| | 9 | 37 |
| | 25 | 5 |
| | 39 | 5 |
| | 39 | 15 |
| | 39 | 18 |
| | 40 | 27 |
| | 50 | 7 |
| | 74 | 17 |
| | 75 | 17 |
| | 77 | 5 |
| | 79 | 3 |
| | 80 | 3 |
| | 81 | 3 |
| | 89 | 9 |
| | 92 | 2 |
| | 92 | 13 |
| | 93 | 2 |
| | 108 | 5 |
| | 113 | 105 |
| | 123 | 6 |
| | 129 | 16 |
| | 131 | 81 |
| WASHER, PULLEY | 92 | 22 |
| | 124 | 27 |
| | 125 | 27 |
| | 149 | 6 |
| WASHER, SP/M10 | 1 | 4 |
| | 3 | 7 |
| | 4 | 3 |
| | 8 | 6 |
| WASHER, SP/M10 | 8 | 12 |
| | 24 | 4 |
| | 26 | 19 |
| | 33 | 61 |
| | 35 | 61 |
| | 36 | 57 |
| | 60 | 19 |
| | 61 | 19 |
| | 97 | 7 |
| | 101 | 19 |
| | 126 | 57 |
| WASHER, SP/M12 | 1 | 9 |
| | 27 | 3 |
| | 33 | 58 |
| | 34 | 54 |
| | 35 | 58 |
| | 36 | 54 |
| | 54 | 6 |
| WASHER, SP/M3 | 6 | 32 |
| | 7 | 15 |
| | 20 | 19 |
| | 40 | 19 |
| | 90 | 10 |
| | 92 | 26 |
| | 109 | 14 |
| | 111 | 46 |
| | 112 | 9 |
| | 133 | 11 |
| | 157 | 31 |
| | 157 | 33 |
| | 158 | 29 |
| | 158 | 31 |
| | 159 | 31 |
| | 159 | 33 |
| | 160 | 29 |
| | 160 | 31 |
| WASHER, SP/M4 | 44 | 17 |
| | 90 | 37 |
| | 108 | 22 |
| | 113 | 6 |
| | 113 | 29 |
| | 113 | 42 |
| | 113 | 65 |
| | 157 | 17 |
| | 157 | 42 |

| Description | Fig. | Key |
|---|---|---|
| WASHER,SP/M4 | 158 | 15 |
| | 158 | 40 |
| | 159 | 17 |
| | 159 | 42 |
| | 160 | 15 |
| | 160 | 40 |
| WASHER,SP/M5 | 108 | 18 |
| | 109 | 10 |
| | 110 | 6 |
| | 112 | 14 |
| WASHER,SP/M6 | 1 | 17 |
| | 90 | 5 |
| | 114 | 7 |
| | 115 | 31 |
| | 130 | 33 |
| | 131 | 55 |
| WASHER,SP/M8 | 1 | 14 |
| | 4 | 8 |
| | 7 | 23 |
| | 8 | 16 |
| | 9 | 17 |
| | 11 | 5 |
| | 11 | 18 |
| | 16 | 5 |
| | 25 | 3 |
| | 38 | 15 |
| | 44 | 9 |
| | 53 | 20 |
| | 89 | 8 |
| | 108 | 4 |
| | 108 | 34 |
| | 108 | 41 |
| | 108 | 66 |
| | 109 | 20 |
| | 124 | 23 |
| | 124 | 28 |
| | 125 | 23 |
| | 125 | 28 |
| | 127 | 3 |
| WASHER,TENSION | 32 | 6 |
| | 116 | 56 |
| WASHER,WIRE TENSION | 1 | 18 |
| | 33 | 47 |
| | 34 | 43 |
| | 35 | 47 |

| Description | Fig. | Key |
|---|---|---|
| WASHER,WIRE TENSION | 36 | 43 |
| | 39 | 24 |
| | 40 | 8 |
| | 82 | 34 |
| | 83 | 34 |
| | 116 | 40 |
| | 122 | 5 |
| | 131 | 52 |
| WASHER/05X16X01 | 108 | 19 |
| WASHER/07X16X03 | 133 | 2 |
| WASHER/07X18X1.5 | 114 | 6 |
| WASHER/09X11X1.6 | 49 | 3 |
| WASHER/09X18X03 | 124 | 22 |
| | 125 | 22 |
| WASHER/09X22X02 | 91 | 30 |
| WASHER/09X28X02 | 74 | 19 |
| | 75 | 19 |
| WASHER/09X30X4.5 | 26 | 32 |
| WASHER/11X38X06/G | 97 | 8 |
| WASHER/11X46X06 | 3 | 8 |
| WASHER/12X30X01 | 131 | 6 |
| WASHER/12X30X3.2 | 89 | 13 |
| WASHER/15X23X01 | 91 | 11 |
| WASHER/15X40X05 | 48 | 3 |
| WASHER/16X25X0.4 | 113 | 19 |
| | 113 | 27 |
| | 113 | 55 |
| | 113 | 63 |
| WASHER/16X25X1.0 | 113 | 19-A |
| | 113 | 55-A |
| WASHER/16X46X5 | 26 | 34 |
| WASHER/18X29X02 | 149 | 8 |
| WASHER/18X34X02 | 16 | 18 |
| WASHER/18X45X1 | 113 | 16 |
| | 113 | 25 |
| | 113 | 52 |
| | 113 | 61 |
| WASHER/20X28X01 | 33 | 36 |
| | 35 | 36 |
| WASHER/21X32X03 | 37 | 8 |
| | 38 | 8 |
| WASHER/21X45X01 | 113 | 14 |
| | 113 | 23 |
| | 113 | 50 |
| | 113 | 59 |

| Description | Fig. | Key |
|---|---|---|
| WASHER/25X30X1 | 153 | 42 |
| WASHER/25X35X01 | 108 | 54 |
| WASHER/26X40X03 | 65 | 23 |
| WASHER/27X36X1 | 33 | 12 |
| | 34 | 12 |
| | 35 | 12 |
| | 36 | 12 |
| WASHER/LOCK | 66 | 6 |
| WASHER/M12X20X01 | 91 | 7 |
| | 108 | 11 |
| | 113 | 83 |
| WASHER/M18 | 154 | 27 |
| | 155 | 27 |
| WHEEL/950/LH COMP | 22 | 1 |
| WHEEL/950/RH COMP | 22 | 2 |
| WIRE BAND(92) | 55 | 9 |
| | 56 | 11 |
| | 95 | 7 |
| | 109 | 16 |
| | 118 | 8 |
| | 126 | 48 |
| WIRE,LEAD | 82 | 21 |
| | 83 | 21 |
| WIRE,SEEDING GUIDE/P | 129 | 40 |