Directions for use of Parts Catalogue

1. Applicable model of machines

All component and option parts used for ＰＺ８０ rice transplanters are listed in this parts catalogue.

1) MODEL TYPE

H····· HST

G····· 2-CYLINDER GASOLINE ENGINE OF WATER-COOLED

D····· 3-CYLINDER DIESEL ENGINE

L····· ROTOR

F····· FERTILIZER

2) AREA CODE

E16····· KOREA

2. Explanation for head paragraph

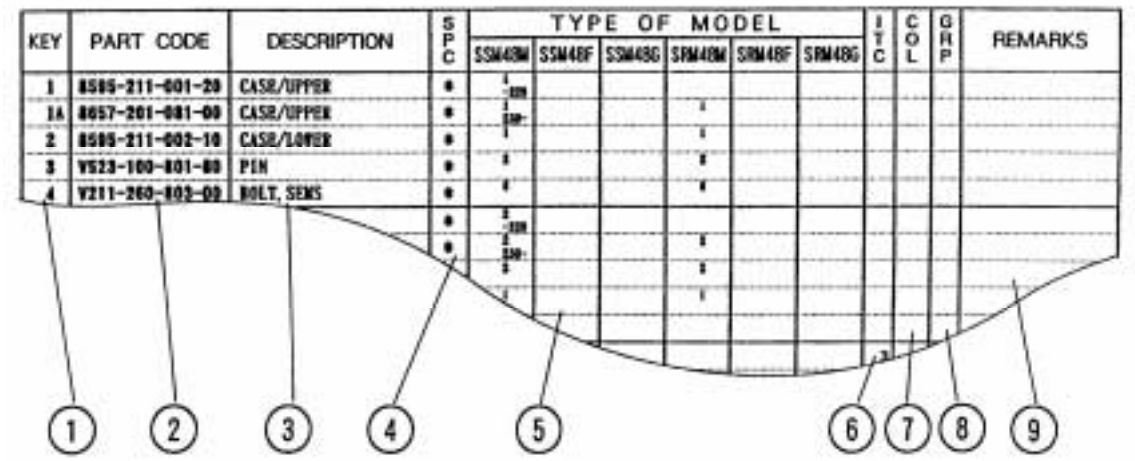

① KEY shows the location of parts diagramed in the illustration.

② Parts numbers begin with `V´ and `W´ are standard parts of the market.

③ `LH´ and `RH´ on the parts name are described against the moving direction of the machine or are described on the condition how to install parts on the machines.

④ SPC : The following symbol classifies parts to be used for machines.

`＊´ means standard parts.

`T´ shows that the parts can be installed as optional parts.

`R´ shows that the parts can be used as applicable parts to replace

originally equipped parts.

⑤ Upper column : QTY shows the number of parts to be used for one unit of machine.

`M´ is indicated for parts supplied by a meter long.

` l ´ is indicated for parts supplied by liter.

`AR´ is indicated for parts need to be adjusted or regulated.

Lower column : serial number

—229 means serial number up to 229.

230— means serial number 230 and after.

⑥ ITC : Interchangeability

`1´…OLD ← NEW

New parts can be used in place of the old parts.

`2´…OLD → NEW

Old parts can be used in place of the new parts.

`3´…OLD →← NEW

Old parts and new parts can not be replaced each other.

⑦ COL : Color code

Color is signified with color code number for colored parts.

Please see the color list shown in the next page.

⑧ GRP : Parts shown in this column can be replaced by SET parts.

Example : Parts marked Ⓐ can be replaced by parts marked Ⓑ, and Ⓓ for Ⓒ, so the rest follow in the same alphabetical order.

⑨ Remarks

＊Other maker's part code number is shown in this column.

＊When Fig. No. is shown in the Remark column of SET parts or ASSY parts, each of their component parts are listed in said Fig. No.

3. Color :

The following colors are used color parts.

COLOR CODE	COLOR	SPRAY TYPE PARTS CODE	PAINTS 4K DRUM PARTS CODE	PAINTS 16K DRUM PARTS CODE
4 L	NEO BLUE	1300-985-001-10	1300-985-003-00	――――
5 N	GRAY NO.1	1300-983-001-10	1300-983-003-00	――――
6 G	SUMMER WHITE	1300-958-001-10	1300-958-003-00	1300-958-004-00
7 F	MIRROR BLACK	1300-954-001-10	1300-954-003-00	1300-954-004-00
8 E	SILVER MIST	1300-968-001-10	1300-968-003-00	1300-968-004-00

NOTE : Color code is signified only for the parts assigned by the maker as color parts.

4. Serial Numbers :

1) For engines serial number is stamped on CRANK CASE COMP.
   Please see Fig. No. 1－15.
2) For chassies serial number is shown on the LABEL.
   Please see

5. Parts Order

1) When you order parts, please make sure of correct numbers.
2) When substitute parts is available, the part number ordered will be automatically turned to a new part number.
3) Please be sure to use “ISEKI GENUINE PARTS”.
   Any other similar parts other than ISEKI parts when used may cause a trouble that makes us unable to repair or guarantee the warrant.

*** Structure Table of Model ***

MODEL / FIG.	PZ80E16	HDLE16	HDLF16	HGLE16	HGLF16							
1	*											
2		*										
3	*	*										
4				*	*							
5	*	*										
6				*	*							
7				*	*							
8	*	*										
9				*	*							
10				*	*							
11	*	*										
12				*	*							
13	*	*	*	*								
14				*	*							
15	*	*										
16				*	*							
17	*	*										
18	*	*	*	*								
19	*	*	*	*								
20	*	*										
21				*	*							
22	*	*	*	*								
23	*	*										
24				*	*							
25	*	*										
26				*	*							
27	*	*	*	*								
28	*	*	*	*								
29	*	*	*	*								
30	*	*	*	*								
31	*	*										
32				*	*							
33	*	*	*	*								
34	*	*	*	*								
35	*	*	*	*								
36	*	*										
37				*	*							
38	*	*	*	*								
39	*	*	*	*								
40	*	*	*	*								
41	*	*										
42				*	*							
43	*	*										
44				*	*							
45	*	*	*	*								

*** Structure Table of Model ***

MODEL / FIG.	PZ80E16	HDLE16	HDLFE16	HGLE16	HGLFE16											
46	*	*	*	*												
47				*	*											
48	*	*														
49	*	*	*	*												
50	*	*	*	*												
51	*	*	*	*												
52	*	*	*	*												
53	*	*	*	*												
54	*	*	*	*												
55	*	*	*	*												
56	*	*	*	*												
57	*	*	*	*												
58	*	*	*	*												
59	*	*	*	*												
60	*	*	*	*												
61	*	*														
62				*	*											
63				*	*											
64	*	*	*	*												
65	*	*	*	*												
66	*	*	*	*												
67		*		*												
68	*		*													
69		*		*												
70	*		*													
71	*		*													
72		*		*												
73	*	*														
74				*	*											
75	*	*	*	*												
76	*	*	*	*												
77	*	*	*	*												
78	*	*	*	*												
79	*															
80					*											
81		*														
82			*													
83	*															
84					*											
85			*													
86	*	*														
87				*	*											
88	*	*	*	*												
89	*	*	*	*												
90	*	*	*	*												

*** Structure Table of Model ***

MODEL / FIG.	PZ80E16	HDLE16	HDLF16	HGLE16	HGLF16							
91	*	*	*	*								
92	*	*	*	*								
93	*	*	*	*								
94	*	*	*	*								
95	*	*	*	*								
96				*	*							
97	*	*										
98		*										
99					*							
100	*											
101				*								
102	*	*	*	*								
103	*	*										
104				*	*							
105		*										
106	*											
107				*	*							
108	*	*	*	*								
109	*	*	*	*								
110	*	*	*	*								
111	*	*	*	*								
112	*	*	*	*								
113	*	*	*	*								
114	*	*	*	*								
115		*		*								
116	*		*									
117	*	*	*	*								
118	*	*	*	*								
119	*	*	*	*								
120	*	*	*	*								
121	*	*	*	*								
122	*	*	*	*								
123	*		*									
124		*		*								
125		*		*								
126	*		*									
127	*	*	*	*								
128	*	*	*	*								
129	*	*	*	*								
130	*	*	*	*								
131	*	*	*	*								
132	*	*	*	*								
133	*	*	*	*								
134	*	*	*	*								
135	*	*	*	*								

*** Structure Table of Model ***

MODEL / FIG.	PZ80E16	HDLE16	HDLF16	HGLE16	HGLF16							
136	*			*								
137		*			*							
138		*			*							
139	*			*								
140	*	*	*	*								
141	*	*	*	*								
142	*	*	*	*								
143	*	*	*	*								
144	*	*	*	*								
145	*	*	*	*								
146	*	*	*	*								
147	*	*	*	*								
148	*	*	*	*								
149	*	*	*	*								
150	*	*	*	*								
151	*	*	*	*								
152	*	*	*	*								
153			*	*								
154	*	*										
155			*	*								
156	*	*										
157	*	*	*	*								
158			*	*								
159	*	*										
160		*			*							
161		*			*							
162		*			*							
163		*			*							
164		*			*							
165		*			*							
166		*			*							
167		*			*							
168		*										
169		*			*							
170		*			*							
171		*			*							
172		*			*							
173		*			*							
174		*			*							
175		*			*							
176		*			*							
177		*			*							
178	T	T	T	T								
179	T	T	T	T								
180			T	T								

*** Structure Table of Model ***

MODEL / FIG.	PZ80E16	HDLE16	HDLFE16	HGLE16	HGLFE16							
181	T	T	T	T								
182	T	T										
183	T	T	T	T								
184	T	T	T	T								
185	T	T	T	T								
186	T	T	T	T								
187	T	T	T	T								
188	T	T	T	T								
189	*	*	*	*								
190	*	*	*	*								
191	*	*	*	*								
192	*	*	*	*								
193	*	*	*	*								
194	*	*	*	*								
195	*	*	*	*								
196	*	*	*	*								
197		*		*								
198		*		*								

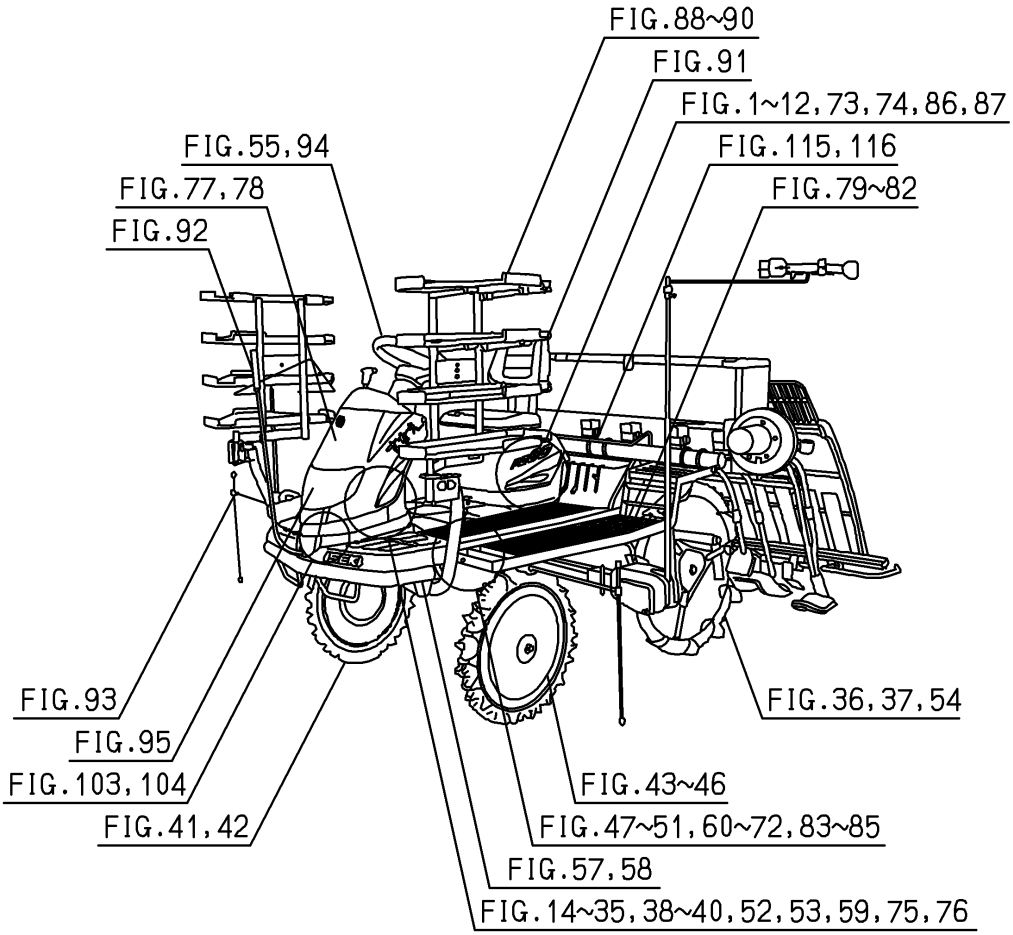
FIG.88~90
FIG.91
FIG.1~12,73,74,86,87
FIG.115,116
FIG.79~82
FIG.55,94
FIG.77,78
FIG.92
FIG.93
FIG.95
FIG.103,104
FIG.41,42
FIG.36,37,54
FIG.43~46
FIG.47~51,60~72,83~85
FIG.57,58
FIG.14~35,38~40,52,53,59,75,76

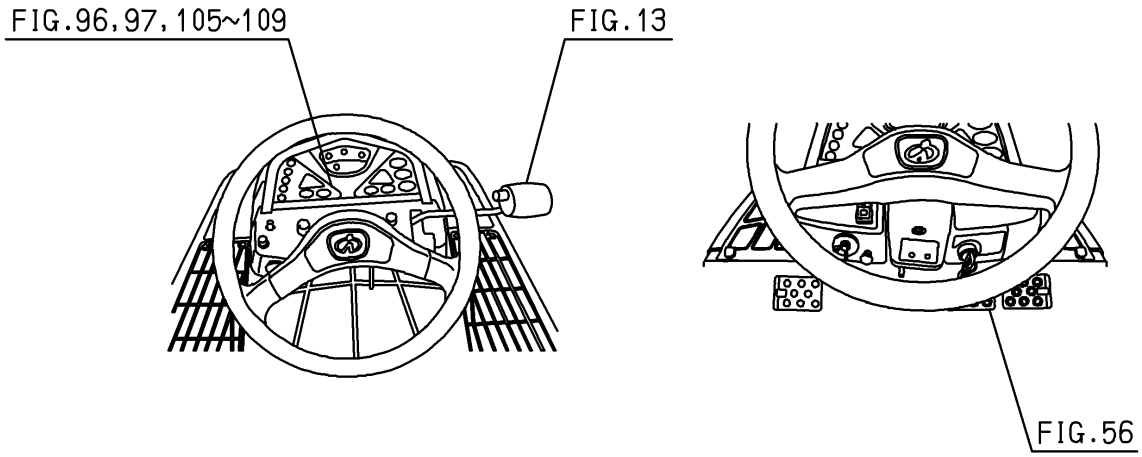
FIG.96,97,105~109
FIG.13
FIG.56

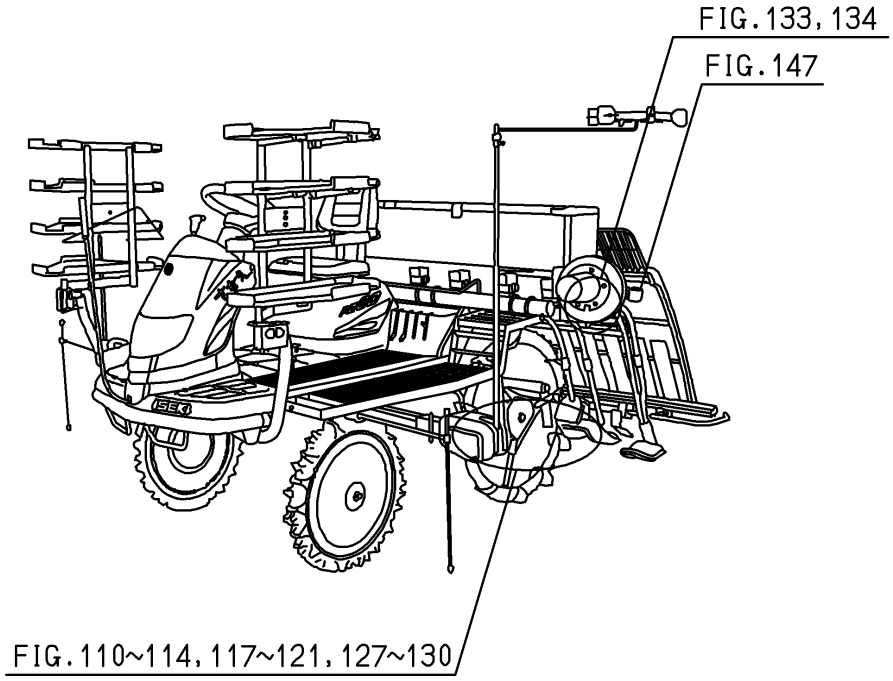
FIG.133,134
FIG.147
FIG.110~114,117~121,127~130

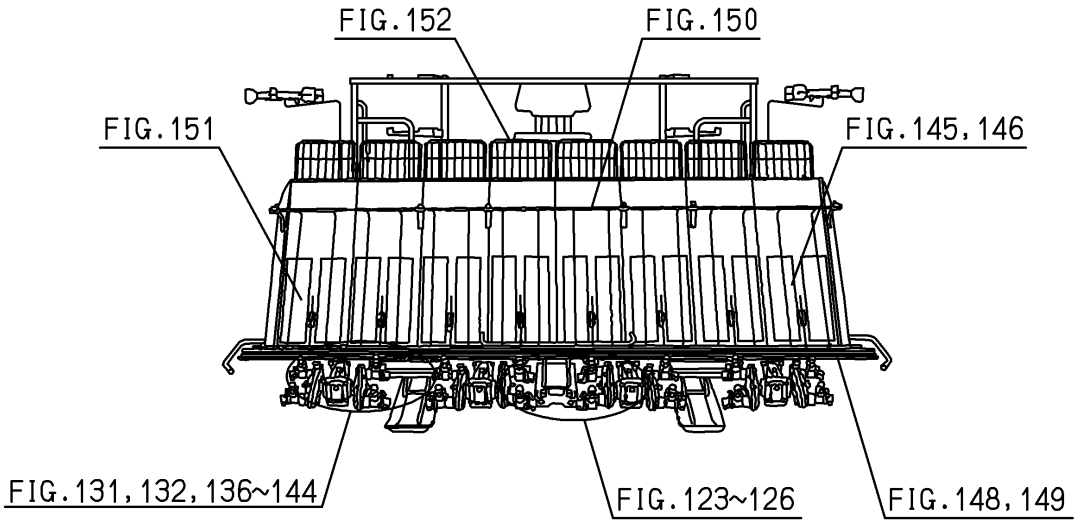
FIG.152
FIG.150
FIG.151
FIG.145,146
FIG.131,132,136~144
FIG.123~126
FIG.148,149

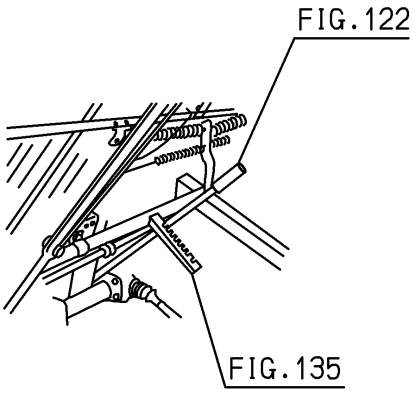
FIG.122
FIG.135

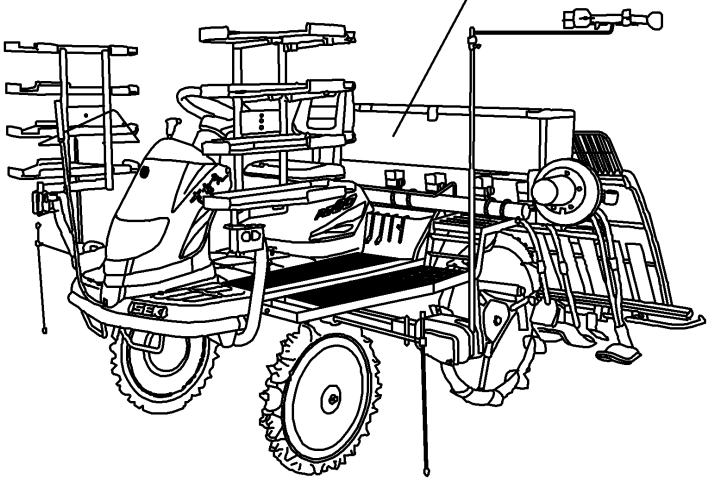

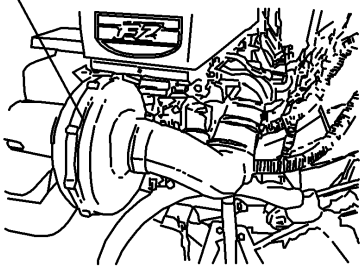

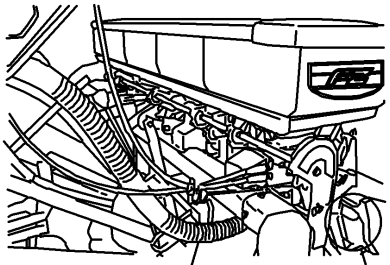

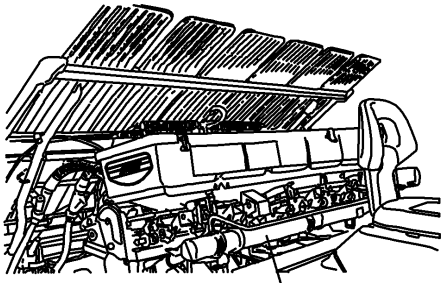

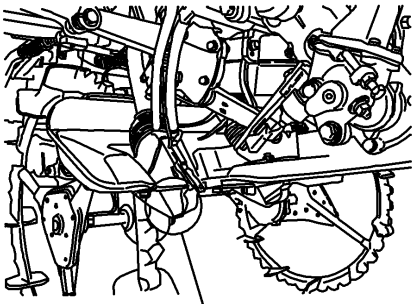

FIG.160~162,164~166,168,173

FIG.174,175

Contents

PZ80E16(HD F-TYPE)

ENGINE(E3112-UP)

CYLINDER HEAD ..... Fig. 1
CYLINDER HEAD COVER ..... Fig. 2
INLET MANIFOLD ..... Fig. 3
EXHAUST MANIFOLD ..... Fig. 4
CYLINDER BLOCK ..... Fig. 5
BEARING/UNDER SIZE (OPTION) ..... Fig. 6
OIL PAN ..... Fig. 7
REAR PLATE ..... Fig. 8
TIMING GEAR CASE ..... Fig. 9
HANGER ..... Fig. 10
VALVE ..... Fig. 11
CAM SHAFT ..... Fig. 12
PISTON ..... Fig. 13
PISTON/OVER SIZE (OPTION) ..... Fig. 14
CRANK SHAFT ..... Fig. 15
OIL PUMP ..... Fig. 16
WATER PUMP ..... Fig. 17
COOLING FAN ..... Fig. 18
INJECTION NOZZLE ..... Fig. 19
INJECTION PUMP ..... Fig. 20
FUEL PIPE ..... Fig. 21
ADAPTER ..... Fig. 22
ELECTRIC (1) ..... Fig. 23
ELECTRIC (2) ..... Fig. 24

REPAIR PARTS(OPTION)……Fig. 25
COMPONENT PARTS
FOR 6215-300-036-10 ON Fig.019……Fig. 26
COMPONENT PARTS
FOR 6215-600-103-30 ON Fig.020……Fig. 27
COMPONENT PARTS
FOR 6281-100-014-00 ON Fig.023……Fig. 28
COMPONENT PARTS
FOR 6281-200-021-00 ON Fig.023……Fig. 29

Contents

PZ80E16(HD-TYPE EXCEPT F)

ENGINE(E3112-UP01)

CYLINDER HEAD ..... Fig. 1
CYLINDER HEAD COVER ..... Fig. 2
INLET MANIFOLD ..... Fig. 3
EXHAUST MANIFOLD ..... Fig. 4
CYLINDER BLOCK ..... Fig. 5
BEARING/UNDER SIZE (OPTION) ..... Fig. 6
OIL PAN ..... Fig. 7
REAR PLATE ..... Fig. 8
TIMING GEAR CASE ..... Fig. 9
HANGER ..... Fig. 10
VALVE ..... Fig. 11
CAM SHAFT ..... Fig. 12
PISTON ..... Fig. 13
PISTON/OVER SIZE (OPTION) ..... Fig. 14
CRANK SHAFT ..... Fig. 15
OIL PUMP ..... Fig. 16
WATER PUMP ..... Fig. 17
COOLING FAN ..... Fig. 18
INJECTION NOZZLE ..... Fig. 19
INJECTION PUMP ..... Fig. 20
FUEL PIPE ..... Fig. 21
ADAPTER ..... Fig. 22
ELECTRIC (1) ..... Fig. 23
ELECTRIC (2) ..... Fig. 24

REPAIR PARTS(OPTION)……Fig. 25
COMPONENT PARTS
FOR 6215-300-036-10 ON Fig.019……Fig. 26
COMPONENT PARTS
FOR 6215-600-103-30 ON Fig.020……Fig. 27
COMPONENT PARTS
FOR 6281-100-014-00 ON Fig.023……Fig. 28

Contents

PZ83E16(HG-TYPE)

ENGINE(FD620D-BB01)

CYLINDER/CRANKCASE····· Fig. 1
PISTON/CRANKSHAFT····· Fig. 2
VALVE/CAMSHAFT····· Fig. 3
LUBRICATION-EQUIPMENT····· Fig. 4
COOLING-EQUIPMENT····· Fig. 5
ELECTRIC-EQUIPMENT····· Fig. 6
CONTROL-EQUIPMENT····· Fig. 7
CARBURETOR····· Fig. 8
AIR-FILTER/MUFFLER····· Fig. 9
FUEL-TANK/FUEL-VALVE····· Fig. 10
STARTER····· Fig. 11
LABEL····· Fig. 12

Contents

CHASSIS

GUIDE(HARNESS/ENGINE)SYSTEM
(D TYPE EXCEPT F)····· Fig. 1
GUIDE(HARNESS/ENGINE)SYSTEM
(D-F TYPE)····· Fig. 2
BRACKET(ENGINE)SYSTEM(D TYPE)····· Fig. 3
BOLT(SET)¤COVER(MUFFLER¤RADIATOR)
&LABEL(MODEL/ENGINE)SYSTEM(G TYPE)····· Fig. 4
RADIATOR SYSTEM(D TYPE)····· Fig. 5
RADIATOR SYSTEM(G TYPE)····· Fig. 6
MOUNT(ENGINE)SYSTEM(G TYPE)····· Fig. 7
PULLEY(ENGINE)SYSTEM(D TYPE)····· Fig. 8
PULLEY(ENGINE)SYSTEM(G TYPE)····· Fig. 9
STAY(ARM/TENSION)SYSTEM(G TYPE)····· Fig. 10
TANK(FUEL)SYSTEM(D TYPE)····· Fig. 11
TANK(FUEL)SYSTEM(G TYPE)····· Fig. 12
LEVER(HST)SYSTEM····· Fig. 13
HST SYSTEM(G TYPE)(NO.102350-)····· Fig. 14
HST SYSTEM(D TYPE)(NO.102350-)····· Fig. 15
HST SYSTEM(G TYPE)(NO.100001-102349)····· Fig. 16
HST SYSTEM(D TYPE)(NO.100001-102349)····· Fig. 17
LINK(HST)SYSTEM(NO.100001-102349)····· Fig. 18
LINK(HST)SYSTEM(NO.102350-)····· Fig. 19
PEDAL(ACCELERATOR)SYSTEM(D TYPE)····· Fig. 20
PEDAL(ACCELERATOR)SYSTEM(G TYPE)····· Fig. 21
CASE(TRANSMISSION)SYSTEM····· Fig. 22
SHAFT(INPUT)SYSTEM(D TYPE)····· Fig. 23
SHAFT(INPUT)SYSTEM(G TYPE)····· Fig. 24

SHAFT(CHANGE)SYSTEM(D TYPE)····· Fig. 25
SHAFT(CHANGE)SYSTEM(G TYPE)····· Fig. 26
SHAFT(COUNTER)SYSTEM····· Fig. 27
SHAFT(OUTPUT)SYSTEM····· Fig. 28
SHAFT(DRIVE/FRONT)SYSTEM
(NO.100001-102349)····· Fig. 29
SHAFT(DRIVE/FRONT)SYSTEM(NO.102350-)····· Fig. 30
SHAFT(DRIVE/PLANTING)SYSTEM(D TYPE)····· Fig. 31
SHAFT(DRIVE/PLANTING)SYSTEM(G TYPE)····· Fig. 32
SHAFT(PLANTING/OUTPUT)SYSTEM····· Fig. 33
SHIFTER(CHANGE)SYSTEM····· Fig. 34
PEDAL(DIFF-LOCK)SYSTEM····· Fig. 35
WHEEL(REAR)SYSTEM(D TYPE)····· Fig. 36
WHEEL(REAR)SYSTEM(G TYPE)····· Fig. 37
STEERING SYSTEM····· Fig. 38
ROD(TIE)SYSTEM····· Fig. 39
TURN SYSTEM····· Fig. 40
CASE(FINAL)SYSTEM(D TYPE)····· Fig. 41
CASE(FINAL)SYSTEM(G TYPE)····· Fig. 42
SHAFT(WHEEL/FRONT)SYSTEM(D TYPE)····· Fig. 43
SHAFT(WHEEL/FRONT)SYSTEM(G TYPE)····· Fig. 44
WHEEL(FRONT)SYSTEM····· Fig. 45
CAP(WHEEL/FRONT)SYSTEM····· Fig. 46
FRAME(MAIN)SYSTEM(G TYPE)····· Fig. 47
FRAME(MAIN)SYSTEM(D TYPE)····· Fig. 48
SHAFT(DRIVE/REAR)SYSTEM····· Fig. 49
SHAFT(PLANTING)SYSTEM····· Fig. 50
FRAME(ROLLING)SYSTEM····· Fig. 51
SHAFT(BRAKE)SYSTEM(NO.100001-102165)····· Fig. 52
SHAFT(BRAKE)SYSTEM(NO.102166-)····· Fig. 53
CASE(REAR)SYSTEM····· Fig. 54
WHEEL(STEERING)SYSTEM····· Fig. 55
PEDAL(BRAKE)SYSTEM(1/3)-(3/3)····· Fig. 56

WEIGHT SYSTEM……Fig. 57
BUMPER SYSTEM……Fig. 58
PUMP SYSTEM……Fig. 59
CYLINDER SYSTEM……Fig. 60
PIPING SYSTEM(D TYPE)(1/2)(2/2)……Fig. 61
PIPING SYSTEM(G TYPE)
(NO.100001-101046)(1/2)(2/2)……Fig. 62
PIPING SYSTEM(G TYPE)(NO.101047-)(1/2)(2/2)……Fig. 63
CASE(SPRING)SYSTEM……Fig. 64
LINK(LOWER)SYSTEM……Fig. 65
LINK(UPPER)SYSTEM……Fig. 66
CASE(PLANTING)SYSTEM(F TYPE)
(NO.100001-101046)……Fig. 67
CASE(PLANTING)SYSTEM
(EXCEPT F TYPE)(NO.100001-101046)……Fig. 68
(F TYPE)(NO.101047-)
CASE(PLANTING)SYSTEM……Fig. 69
CASE(PLANTING)SYSTEM
(EXCEPT F TYPE)(NO.101047-)……Fig. 70
MOTOR(PLANTING)SYSTEM
(EXCEPT F TYPE)……Fig. 71
MOTOR(PLANTING)SYSTEM(F TYPE)……Fig. 72
LEVER
(PLANTING INTERVAL)SYSTEM(D TYPE)……Fig. 73
LEVER
(PLANTING INTERVAL)SYSTEM(G TYPE)……Fig. 74
VALVE SYSTEM……Fig. 75
CONTROLLER(STEERING)SYSTEM……Fig. 76
HOOD SYSTEM……Fig. 77
HOOD(REAR)SYSTEM……Fig. 78
STEP(MAIN)SYSTEM(D TYPE EXCEPT F)……Fig. 79
STEP(MAIN)SYSTEM(G-F TYPE)……Fig. 80
STEP(MAIN)SYSTEM(D-F TYPE)……Fig. 81

STEP(MAIN)SYSTEM(G TYPE EXCEPT F)····· Fig. 82
STEP(REAR)SYSTEM(D TYPE EXCEPT F)····· Fig. 83
STEP(REAR)SYSTEM(G-F TYPE)····· Fig. 84
STEP(REAR)SYSTEM(G TYPE EXCEPT F)····· Fig. 85
COVER(ENGINE)SYSTEM(D TYPE)····· Fig. 86
COVER(ENGINE)SYSTEM(G TYPE)····· Fig. 87
TRAY(SEEDLING/SUB)SYSTEM····· Fig. 88
MIRROR SYSTEM····· Fig. 89
STAY(FRAME/SEEDLING/SUB)SYSTEM····· Fig. 90
SEAT SYSTEM····· Fig. 91
MARKER(CENTER)SYSTEM····· Fig. 92
MARKER(SIDE)SYSTEM····· Fig. 93
SWITCH(BACK LIFT)SYSTEM····· Fig. 94
LAMP(HEAD)SYSTEM····· Fig. 95
PANEL(INSTRUMENT)SYSTEM(G TYPE)····· Fig. 96
PANEL(INSTRUMENT)SYSTEM(D TYPE)····· Fig. 97
HARNESS
(TRAVELING SECTION)SYSTEM(D-F TYPE)····· Fig. 98
HARNESS
(TRAVELING SECTION)SYSTEM(G-F TYPE)····· Fig. 99
HARNESS
(TRAVELING SECTION)SYSTEM(D TYPE EXCEPT F)····· Fig.100
HARNESS
(TRAVELING SECTION)SYSTEM(G TYPE EXCEPT F)····· Fig.101
HARNESS(PLANTING SECTION)SYSTEM····· Fig.102
BATTERY SYSTEM(D TYPE)····· Fig.103
BATTERY SYSTEM(G TYPE)····· Fig.104
SWITCH SYSTEM(D-F TYPE)····· Fig.105
SWITCH SYSTEM(D TYPE EXCEPT F)····· Fig.106
SWITCH SYSTEM(G TYPE)····· Fig.107
CONTROLLER SYSTEM····· Fig.108
CLUTCH(PLANTING)SYSTEM····· Fig.109
DRIVE(ROTOR)SYSTEM····· Fig.110

ROTOR SYSTEM(1/2)(2/2)……Fig.111
LEVER
(DEPTH/ROTOR)SYSTEM(NO.101650-)(1/2)(2/2)……Fig.112
LEVER
(DEPTH/ROTOR)SYSTEM(NO.100001-101649)(1/2)(2/2)……Fig.113
CASE(CHAIN)SYSTEM……Fig.114
HANDRAIL SYSTEM(F TYPE)……Fig.115
HANDRAIL SYSTEM(EXCEPT F TYPE)……Fig.116
LIFT SYSTEM……Fig.117
FRAME(PLANTING)SYSTEM……Fig.118
LINK(FLOAT)SYSTEM……Fig.119
SLIDE SYSTEM……Fig.120
CAM(LEAD)SYSTEM……Fig.121
LEVER(DEPTH/PLANTING)SYSTEM……Fig.122
FLOAT(CENTER)SYSTEM
(EXCEPT F TYPE)(NO.101650-)……Fig.123
FLOAT(CENTER)SYSTEM
(F TYPE)(NO.101650-)……Fig.124
FLOAT(CENTER)SYSTEM
(F TYPE)(NO.100001-101649)……Fig.125
FLOAT(CENTER)SYSTEM
(EXCEPT F TYPE)(NO.100001-101649)……Fig.126
ADJUSTMENT(ROLLING)SYSTEM……Fig.127
AUTOMATIC(ROLLING)SYSTEM……Fig.128
RAKE SYSTEM……Fig.129
RAKE(SIDE)SYSTEM(NO.101047-)……Fig.130
FRAME(SIDE)SYSTEM……Fig.131
PIPING(OIL/SLIDER)SYSTEM……Fig.132
FRAME
(TANK/SEEDLING)SYSTEM(NO.100001-102349)……Fig.133
FRAME
(TANK/SEEDLING)SYSTEM(NO.102350-)……Fig.134
LEVER(PICKING/SEEDLING)SYSTEM……Fig.135

FLOAT(SIDE)SYSTEM
(EXCEPT F TYPE)(NO.101650-)····· Fig.136
FLOAT(SIDE)SYSTEM(F TYPE)(NO.101650-)····· Fig.137
FLOAT(SIDE)SYSTEM
(F TYPE)(NO.100001-101649)····· Fig.138
FLOAT(SIDE)SYSTEM
(EXCEPT F TYPE)(NO.100001-101649)····· Fig.139
STOPPER(FLOAT)SYSTEM(NO.101047-)····· Fig.140
MARKER SYSTEM(1/2)(2/2)····· Fig.141
STAND SYSTEM····· Fig.142
PLANTER(LH)SYSTEM····· Fig.143
PLANTER(RH)SYSTEM····· Fig.144
TANK
(SEEDLING)SYSTEM(NO.100001-101649)(1/3)-(3/3)····· Fig.145
TANK(SEEDLING)SYSTEM(NO.101650-)(1/3)-(3/3)····· Fig.146
LAMP(TURN SIGNAL)SYSTEM····· Fig.147
PLATE(FRONT)SYSTEM(NO.100001-101649)····· Fig.148
PLATE(FRONT)SYSTEM(NO.101650-)····· Fig.149
HOLDER(SEEDLING)SYSTEM····· Fig.150
FEED(SEEDLING)SYSTEM(1/3)-(3/3)····· Fig.151
EXTENSION(TANK/SEEDLING)SYSTEM····· Fig.152
LABEL(CAUTION)(G TYPE)····· Fig.153
LABEL(CAUTION)(D TYPE)····· Fig.154
ORNAMENT&LABEL(G TYPE)····· Fig.155
ORNAMENT&LABEL(D TYPE)····· Fig.156
LABEL(PLANTING INTERVAL)····· Fig.157
ACCESSORY
(FORK,WRENCH&GREASE)(G TYPE)····· Fig.158
ACCESSORY(FORK&GREASE)(D TYPE)····· Fig.159

FERTILIZER

DRIVE SYSTEM(F TYPE)(1/2)(2/2)····· Fig.160

AIR CHAMBER SYSTEM(F TYPE)····· Fig.161
DISCHARGE SYSTEM(F TYPE)····· Fig.162
HARNESS,
SENNSOR&CONTROLLER SYSTEM(F TYPE)····· Fig.163
SENNSOR(SEND OUT)SYSTEM(F TYPE)····· Fig.164
FRAME SYSTEM(F TYPE)····· Fig.165
FRAME(FERTILIZER)SYSTEM(F TYPE)(1/2)(2/2)····· Fig.166
BLOWER SYSTEM(F TYPE)····· Fig.167
PLATE(STEP)SYSTEM(D-F TYPE)····· Fig.168
SEND OUT SYSTEM(F TYPE)(1/3)-(3/3)····· Fig.169
HOPPER SYSTEM(F TYPE)(NO.100001-101649)····· Fig.170
HOPPER SYSTEM(F TYPE)(NO.101650-)····· Fig.171
PIPING(FERTILIZER)SYSTEM(F TYPE)····· Fig.172
CLUTCH(FERTILIZE)SYSTEM(F TYPE)····· Fig.173
DITCHER SYSTEM(F TYPE)(NO.101650-)····· Fig.174
DITCHER SYSTEM
(F TYPE)(NO.100001-101649)····· Fig.175
ORNAMENT&LABEL(F TYPE)····· Fig.176
ACCESSORY(BRUSH)(F TYPE)····· Fig.177

OPTIONAL PARTS

WHEEL(870/PG/OUT)SET(OPTION)····· Fig.178
GREASE(OPTION)····· Fig.179
WHEEL(850/PG/OUT)SET(G TYPE)(OPTION)····· Fig.180
WHEEL(870/PG/IN)SET(OPTION)····· Fig.181
WHEEL(900/OUT)SET(D TYPE)(OPTION)····· Fig.182
GEAR(SLIDE/28/8)SET(OPTION)····· Fig.183
RAKE(FLOAT)SET(OPTION)····· Fig.184
FORK CLEANER(OPTION)····· Fig.185
SEPARATION NEEDLE(OPTION)····· Fig.186
WIDE SEPARATION NEEDLE(OPTION)····· Fig.187
FORK(OPTION)····· Fig.188

COMPONENT PARTS

COMPONENT PARTS
FOR K116-029-000-50 ON Fig.128 ····· Fig.189
COMPONENT PARTS
FOR K200-181-000-40 ON Fig.75 ····· Fig.190
COMPONENT PARTS
FOR K510-013-000-40 ON Fig.16¤17 ····· Fig.191
COMPONENT PARTS
FOR K510-019-000-20 ON Fig.14¤15 ····· Fig.192
COMPONENT PARTS
FOR 2204-738-400-90 ON Fig.143(1/2)(2/2) ····· Fig.193
COMPONENT PARTS
FOR 2204-738-440-10 ON Fig.143(1/2)(2/2) ····· Fig.194
COMPONENT PARTS
FOR 2204-739-400-90 ON Fig.144(1/2)(2/2) ····· Fig.195
COMPONENT PARTS
FOR 2204-739-440-10 ON Fig.144(1/2)(2/2) ····· Fig.196
COMPONENT PARTS
FOR 8844-718-200-10 ON Fig.170 ····· Fig.197
COMPONENT PARTS
FOR 8844-718-310-40 ON Fig.171 ····· Fig.198

WIRING DIAGRAM

WIRING DIAGRAM(D-F TYPE)(1/4)
WIRING DIAGRAM(D-F TYPE)(2/4)
WIRING DIAGRAM(D-F TYPE)(3/4)
WIRING DIAGRAM(D-F TYPE)(4/4)
WIRING DIAGRAM(G-F TYPE)(1/4)
WIRING DIAGRAM(G-F TYPE)(2/4)
WIRING DIAGRAM(G-F TYPE)(3/4)

WIRING DIAGRAM(G-F TYPE)(4/4)

WIRING DIAGRAM(D TYPE EXCEPT F)(1/4)

WIRING DIAGRAM(D TYPE EXCEPT F)(2/4)

WIRING DIAGRAM(D TYPE EXCEPT F)(3/4)

WIRING DIAGRAM(D TYPE EXCEPT F)(4/4)

WIRING DIAGRAM(G TYPE EXCEPT F)(1/4)

WIRING DIAGRAM(G TYPE EXCEPT F)(2/4)

WIRING DIAGRAM(G TYPE EXCEPT F)(3/4)

WIRING DIAGRAM(G TYPE EXCEPT F)(4/4)

E N G I N E

E3112UP···PZ80E16(HD TYPE EXCEPT F)

6004-097-421-10

FIG. 1 CYLINDER HEAD

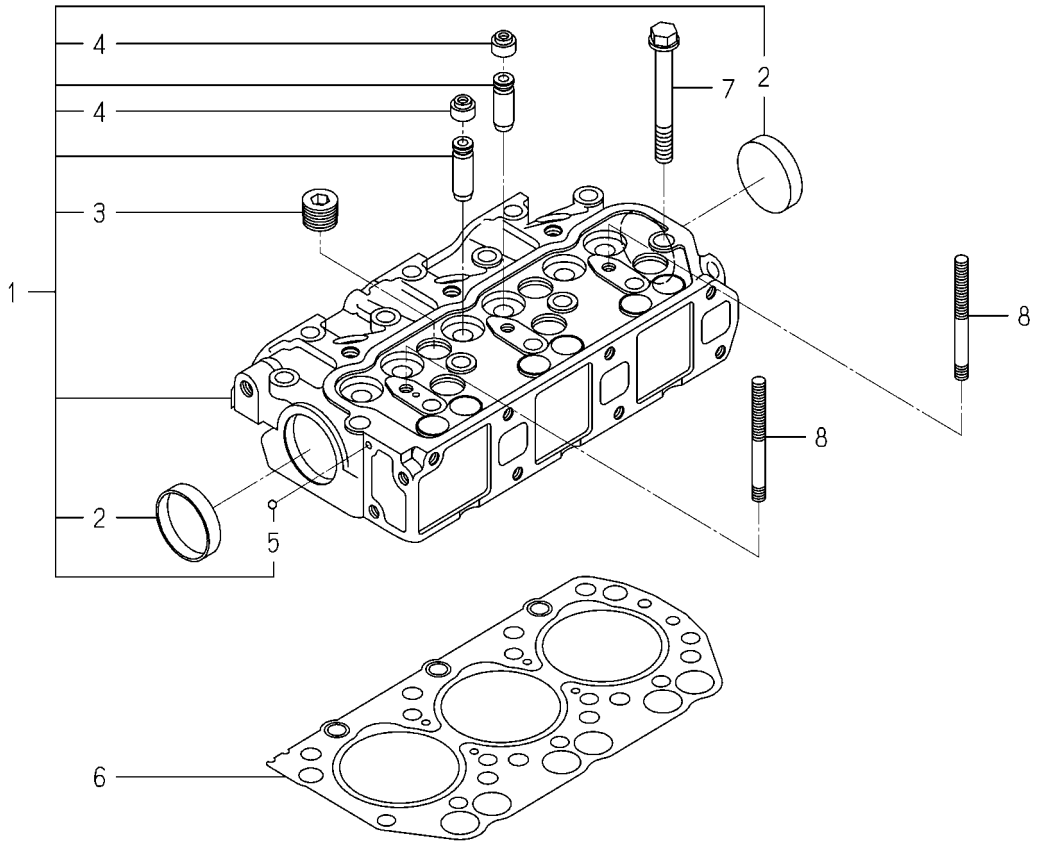

6004-101I-0100,6004-101I-0200

KEY	PART CODE	DESCRIPTION	SPC	TYPE OF MODEL E3112 UP		ITC	COL	GRP	REMARKS
1	6211-110-057-30	CYLINDERHEAD ASSY	*	1					
2	6911-129-006-00	CAP,SEALING	*	2					
3	6209-605-004-10	PLUG/PT1/2	*	5					
4	6212-569-002-00	SEAL,OIL	*	6					
5	V682-200-000-60	BALL	*	1					
6	6211-141-029-20	GASKET/CYLINDERHEAD	*	1					
7	6209-000-044-00	BOLT	*	14					
8	6209-300-014-00	STUD	*	2					

FIG. 2 CYLINDER HEAD COVER

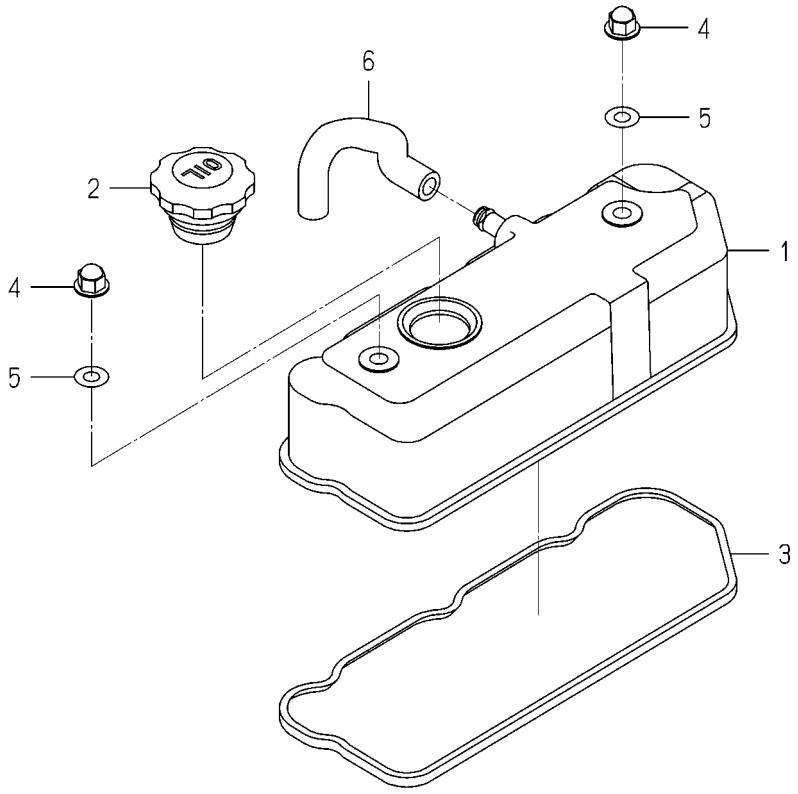

6003-110 -0100

KEY	PART CODE	DESCRIPTION	SPC	TYPE OF MODEL E3112 UP		ITC	COL	GRP	REMARKS
1	6211-170-004-20	COVER/CYLINDER HEAD	*	1					
2	6211-751-001-10	CAP,OIL FILLER	*	1					
3	6211-173-003-00	SEAL,CYL.HEAD COVER	*	1					
4	6209-490-002-10	NUT/CAP	*	2					
5	6209-572-003-00	GASKET	*	2					
6	6209-360-028-20	HOSE/RUBBER	*	1					

FIG. 3 INLET MANIFOLD

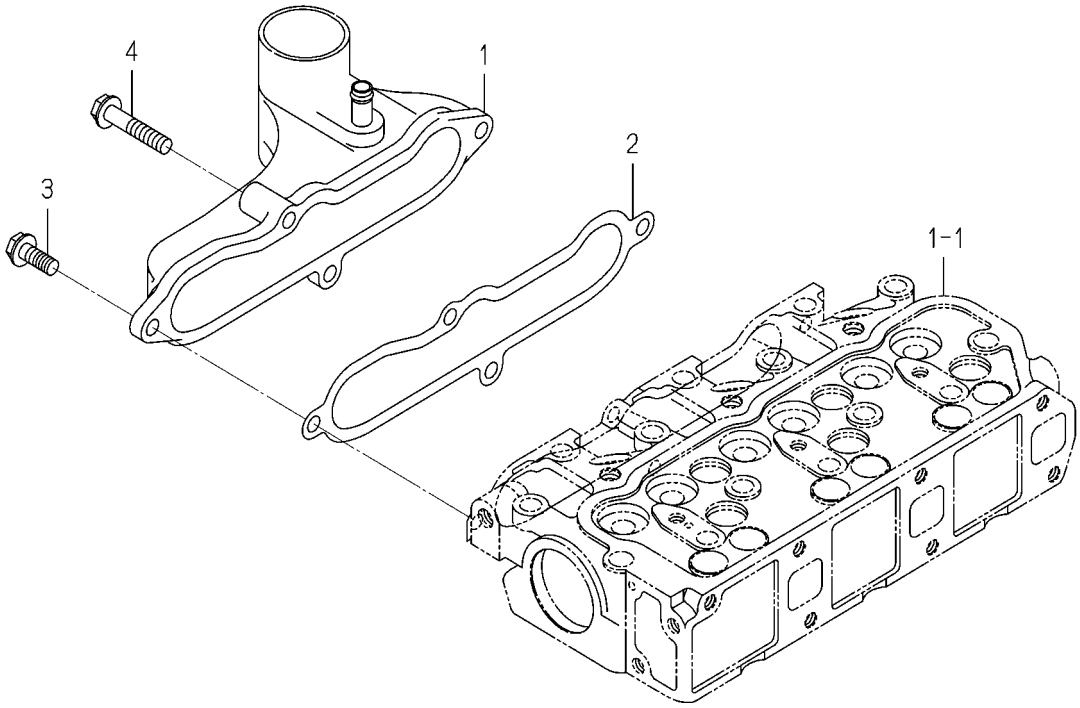

6003-120B-0100

KEY	PART CODE	DESCRIPTION	SPC	TYPE OF MODEL E3112 UP		ITC	COL	GRP	REMARKS
1	6214-111-011-20	MANIFOLD(INLET) ASSY	*	1					
2	6214-115-001-20	GASKET,INLET MANIFOL	*	1					
3	V231-360-802-00	FLANGEBOLT	*	3					
4	V231-360-804-00	FLANGEBOLT	*	1					

FIG. 4 EXHAUST MANIFOLD

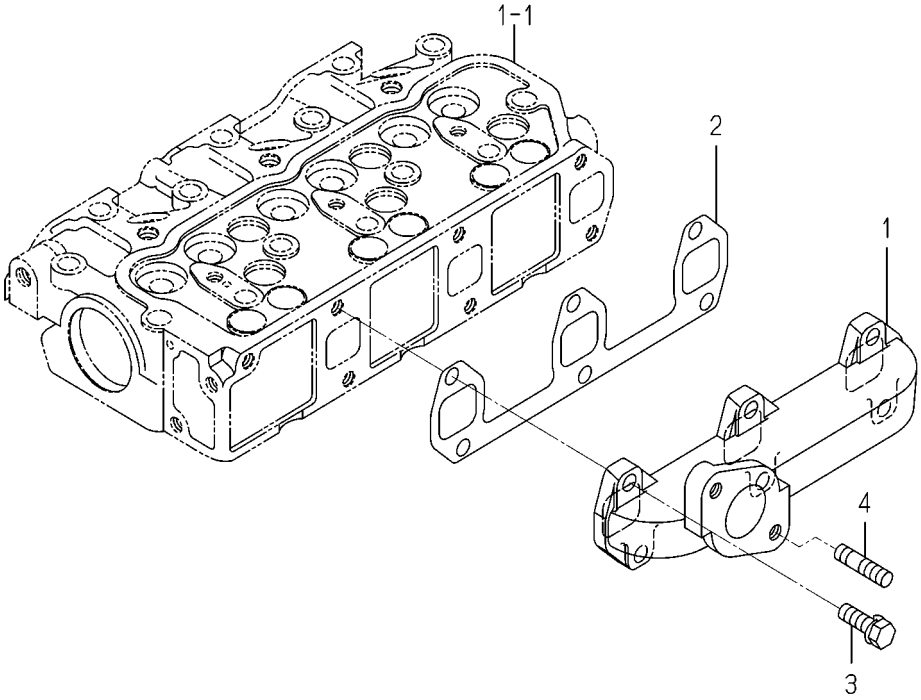

6003-140 -0100

KEY	PART CODE	DESCRIPTION	SPC	TYPE OF MODEL E3112 UP		ITC	COL	GRP	REMARKS
1	6214-141-008-20	MANIFOLD/EXHAUST	*	1					
2	6214-145-001-30	GASKET,EXH.MANIFOLD	*	1					
3	V211-560-802-50	BOLT,SEMS/M8X25 7T	*	6					
4	6904-110-822-00	STUD	*	2					

FIG. 5 CYLINDER BLOCK

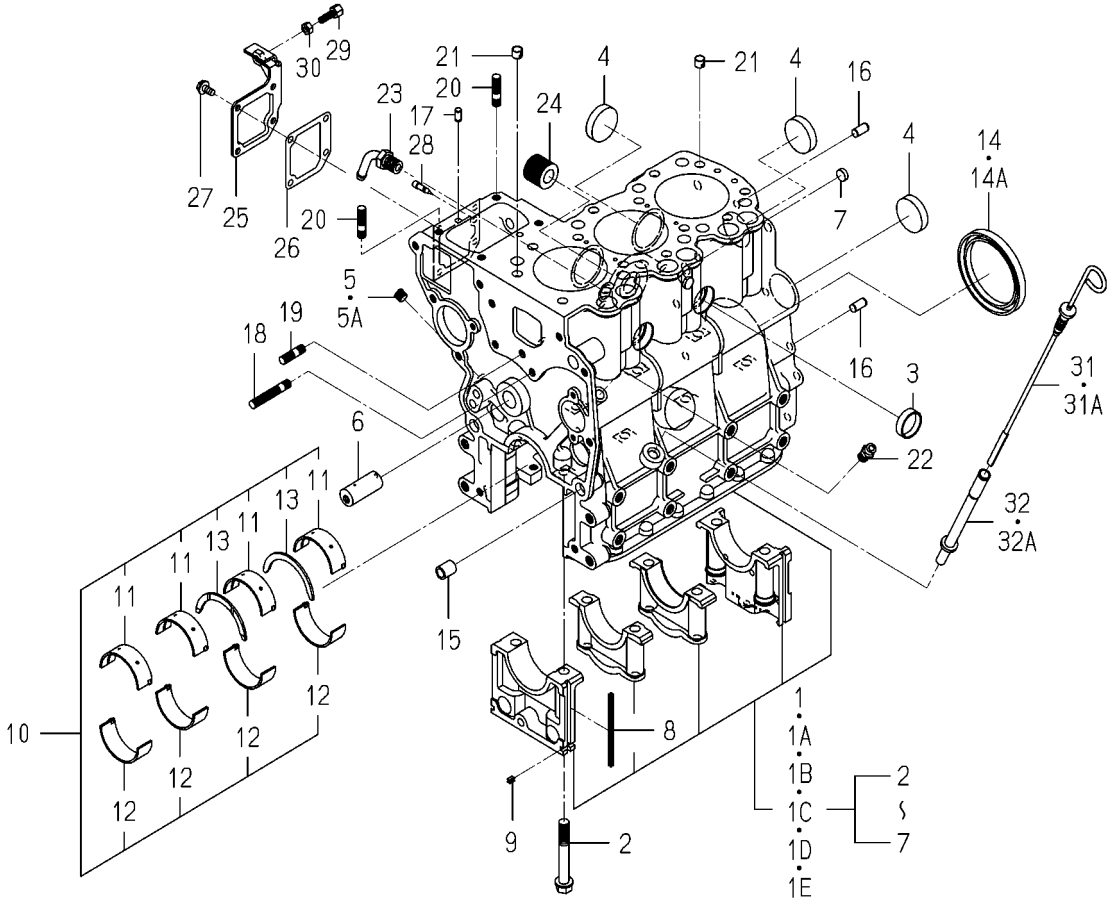

6004-202S-0100

KEY	PART CODE	DESCRIPTION	SPC	TYPE OF MODEL E3112 UP		ITC	COL	GRP	REMARKS
1	6211-210-037-30	CYLINDERBLOCK ASSY	*	1 -308766					
1A	6211-210-037-40	CYLINDERBLOCK ASSY	*	1 -322218		1			
1B	6211-210-037-50	CYLINDERBLOCK ASSY	*	1 -327508		1			
1C	6211-210-037-60	CYLINDERBLOCK ASSY	*	1 -338708		1			
1D	6211-210-037-70	CYLINDERBLOCK ASSY	*	1 -348177		1			
1E	6211-210-037-80	CYLINDERBLOCK ASSY	*	1 348178-		1			
2	6209-000-004-10	BOLT	*	8					
3	6209-610-001-10	CUP/SEALING/28	*	2					
4	6209-610-009-00	CUP/SEALING/36	*	4					
5	6209-605-007-00	PLUG/PT1/8	*	3 -327377					
5A	6209-605-007-10	PLUG/PT1/8	*	3 327378-		1			
6	6212-531-005-10	PIN/IDLEGEAR	*	1					
7	6209-610-008-00	CUP/SEALING/12	*	2					
8	6211-258-001-00	SEAL,BEARING CAP	*	4					
9	6211-258-002-00	SEAL,BEARING CAP/7	*	2					
10	6211-510-001-00	METAL,CRANK SET	*	1					
11	6211-511-003-00	BEARING/CRANK/UPPER	*	4					
12	6211-511-004-00	BEARING/CRANK/LOWER	*	4					
13	6211-599-001-10	BEARING,THRUST CRANK	*	2					
14	6209-625-012-00	OILSEAL	*	1 -303586					
14A	6209-625-001-00	SEAL,OIL	*	1 303587-					
15	6209-749-001-20	PIN/TUBE	*	2					
16	6213-129-006-00	PIN/STRAIGHT	*	2					
17	6209-740-005-00	PIN	*	2					
18	6904-110-840-00	STUD/M8X40	*	1					
19	6904-110-818-00	STUD	*	1					
20	6904-110-822-00	STUD	*	2					
21	6294-453-002-00	DOWEL	*	2					
22	6909-902-299-00	NIPPLE	*	1					
23	6213-721-001-00	PIPE,WATER DRAIN	*	1					

FIG. 5 CYLINDER BLOCK

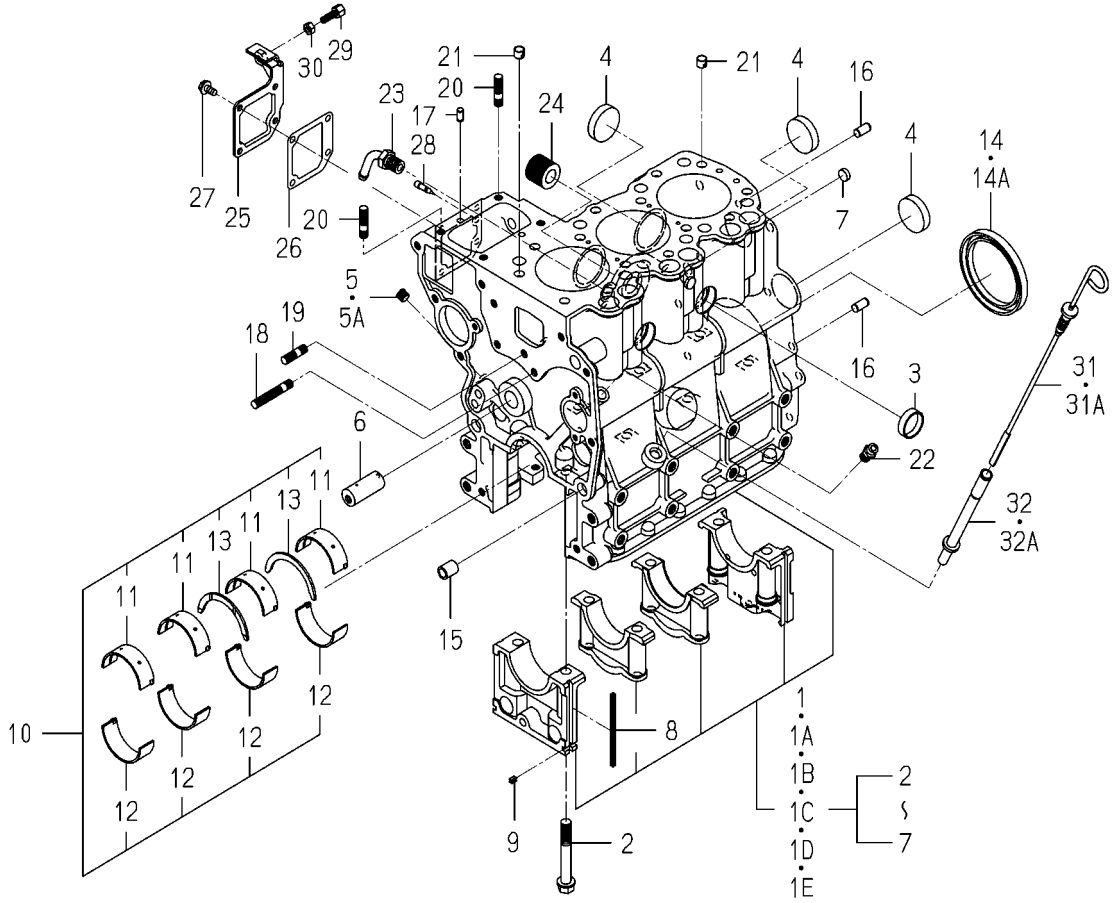

6004-202S-0100

KEY	PART CODE	DESCRIPTION	SPC	TYPE OF MODEL E3112 UP		ITC	COL	GRP	REMARKS
24	6213-319-001-00	CONNECTOR,OIL FILTER	*	1					
25	6211-291-001-10	COVER,INJ PUMP	*	1					
26	6211-292-001-20	GASKET/COVER	*	1					
27	V230-360-601-20	FLANGEBOLT	*	4					
28	6215-549-013-00	PIN	*	1					
29	6209-788-001-00	BOLT,ADJUST	*	1					
30	V301-260-006-00	NUT/M6	*	1					
31	6211-760-053-00	LEVELGAGE	*	1 -314797					
31A	6211-760-053-10	LEVELGAGE	*	1 314798-		1			
32	6211-766-009-00	GUIDE/LEVELGAGE COMP	*	1 -346545					
32A	6211-766-009-10	GUIDE/LEVELGAGE COMP	*	1 346546-		1			

FIG. 6 BEARING/UNDER SIZE (OPTION)

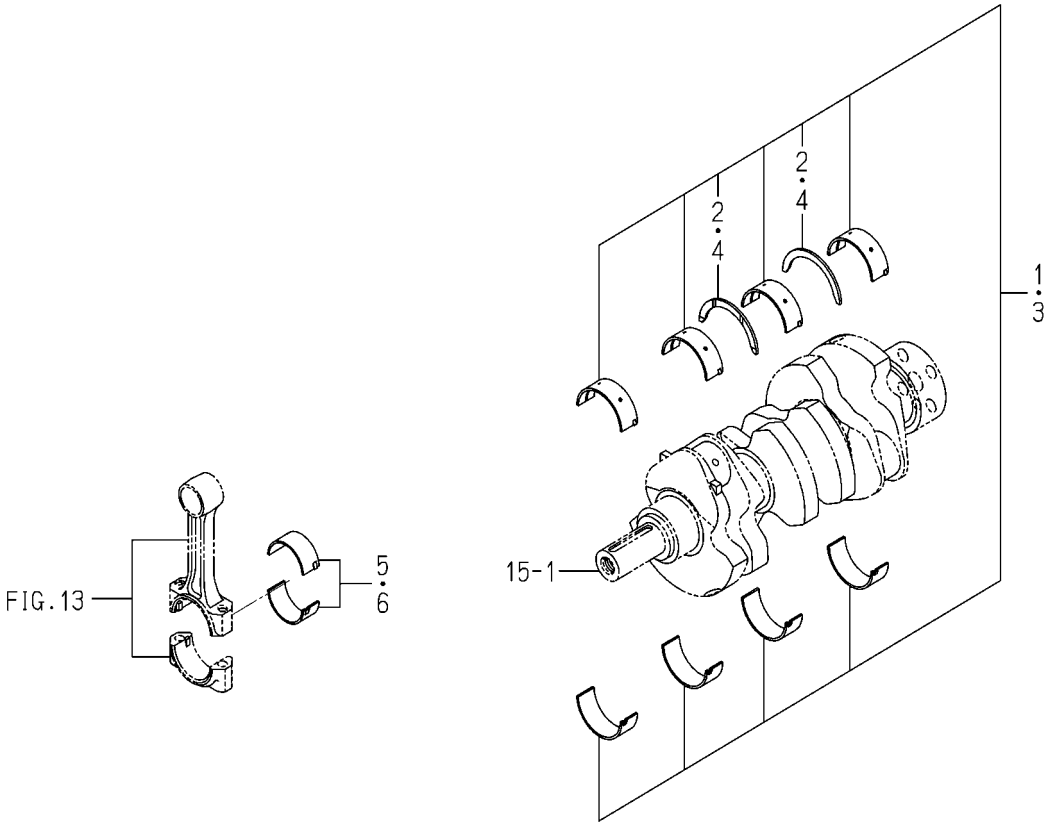

6003-209 -0100

KEY	PART CODE	DESCRIPTION	SPC	TYPE OF MODEL E3112 UP		ITC	COL	GRP	REMARKS
1	6211-540-001-00	METAL,CRANK SET 050	T	1					
2	6211-599-001-10	BEARING,THRUST CRANK	T	2					
3	6211-560-001-00	METAL,CRANK SET 100	T	1					
4	6211-599-001-10	BEARING,THRUST CRANK	T	2					
5	6212-274-016-00	BEARING/CONNECTING R	T	3					
6	6212-276-016-00	BEARING/CONNECTING R	T	3					

FIG. 7 OIL PAN

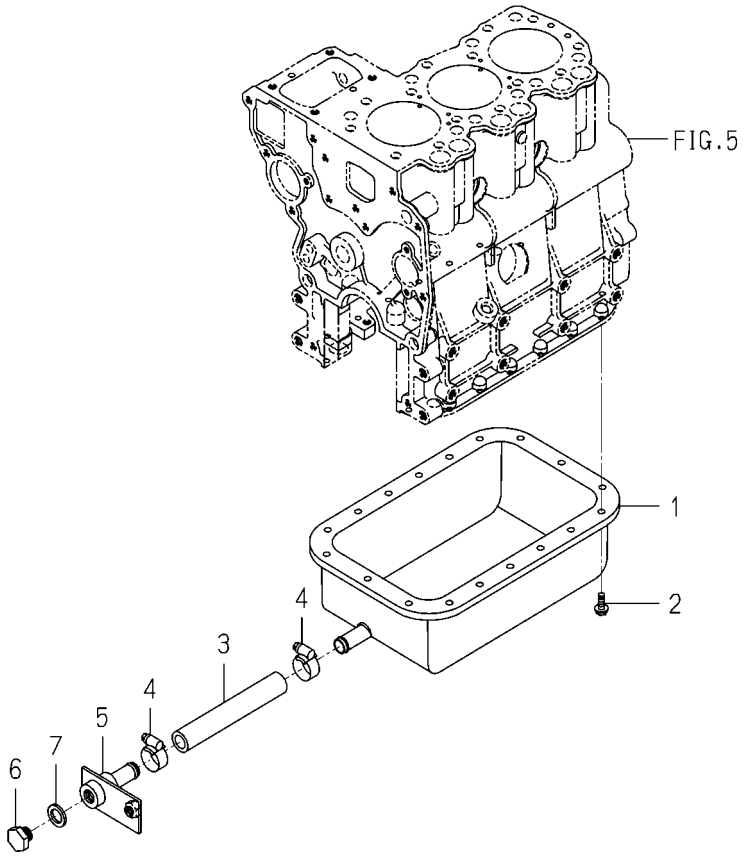

6004-210H-0100

KEY	PART CODE	DESCRIPTION	SPC	TYPE OF MODEL E3112 UP		ITC	COL	GRP	REMARKS
1	6211-361-008-10	PAN,OIL COMP	*	1					
2	V230-360-601-00	FLANGEBOLT	*	18					
3	6209-360-094-00	HOSE/RUBBER/140	*	1					
4	J061-114-024-00	CLAMP/WORM/14-24	*	2					
5	3659-301-260-10	NIPPLE COMP	*	1					
6	6209-600-003-00	PLUG/SCREW/M14X1.5	*	1					
7	6209-500-004-00	WASHER/14X23X1.5	*	1					

FIG. 8 REAR PLATE

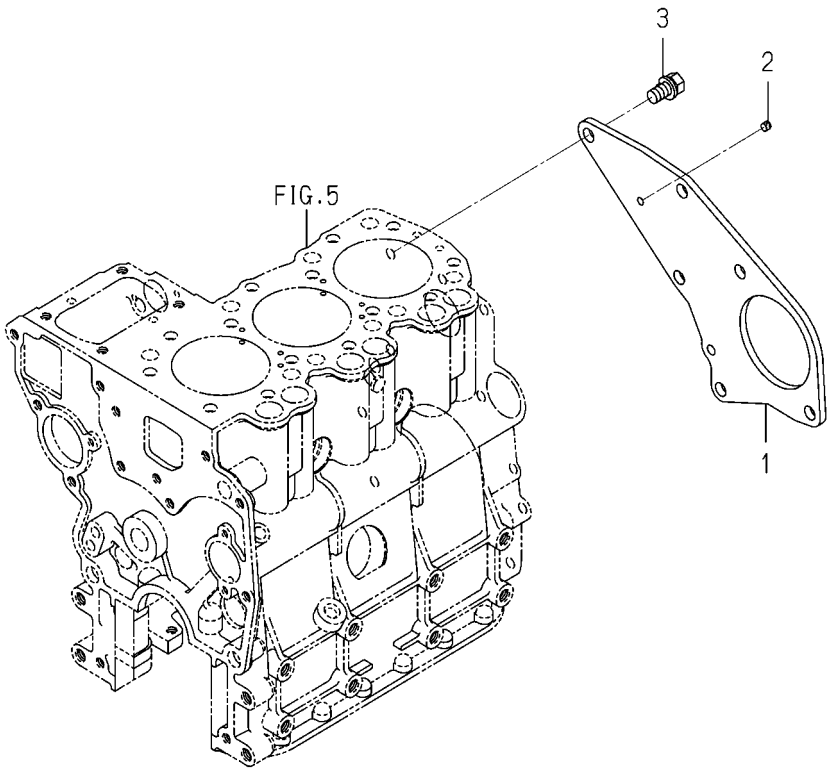

6004-220P-0100

KEY	PART CODE	DESCRIPTION	SPC	TYPE OF MODEL E3112 UP		ITC	COL	GRP	REMARKS
1	6211-341-081-00	PLATE/REAR	*	1					
2	6211-342-001-30	POINTER	*	1					
3	6901-911-020-00	BOLT,SEMS/M10X20	*	4					

FIG. 9 TIMING GEAR CASE

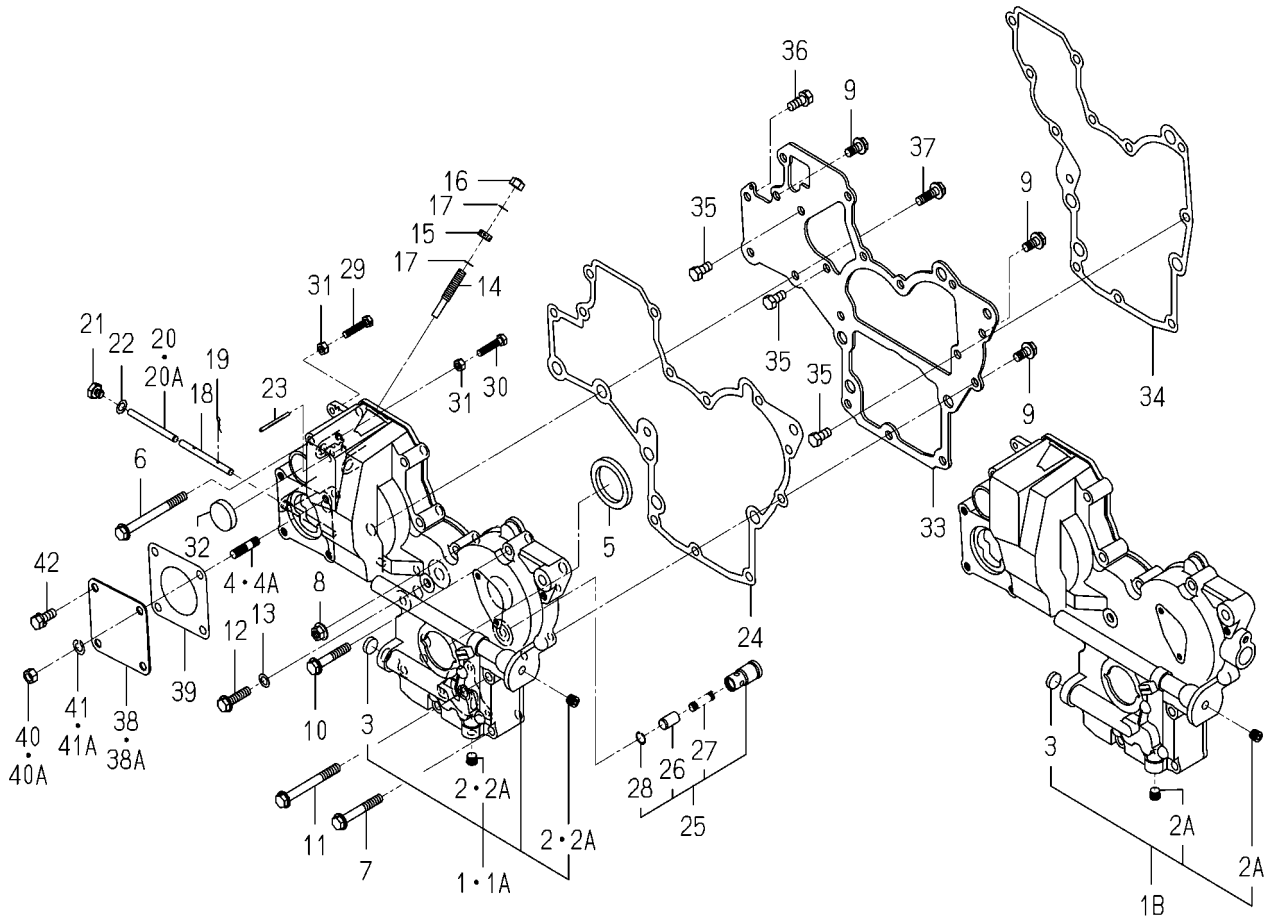

6004-240X-0100,6004-240X-0200

KEY	PART CODE	DESCRIPTION	SPC	TYPE OF MODEL E3112 UP		ITC	COL	GRP	REMARKS
1	6211-310-025-30	GEARCASE ASSY	*	1 -303101					
1A	6211-310-025-40	GEARCASE ASSY	*	1 -329529		1			
1B	6211-310-025-50	GEARCASE ASSY	*	1 329530-		1			
2	6209-605-007-00	PLUG/PT1/8	*	2 -327377					
2A	6209-605-007-10	PLUG/PT1/8	*	2 327378-		1			
3	6209-610-007-00	CUP/SEALING/16	*	1					
4	6904-110-814-00	STUD	*	4 -326963					
4A	6904-110-822-00	STUD	*	1 326964-					
5	6209-625-002-00	SEAL,OIL	*	1					
6	V231-360-808-50	FLANGEBOLT	*	1					
7	V231-360-805-50	FLANGEBOLT	*	2					
8	3817-401-001-00	NUT/M08	*	1					
9	V231-360-801-60	FLANGEBOLT	*	3					
10	V231-360-804-50	FLANGEBOLT	*	5					
11	V231-360-807-50	FLANGEBOLT	*	1					
12	V231-360-803-00	FLANGEBOLT	*	1					
13	6209-500-003-00	WASHER/08X14X01	*	1					
14	6215-546-003-10	STOPPER/FULLLOAD	*	1					
15	6209-409-001-00	NUT/M8	*	1					
16	V341-120-008-00	NUT,CAP/M 8	*	1					
17	6209-920-002-00	PACKING	*	2					
18	6215-542-004-20	PIN/ARM	*	1					
19	P117-303-003-00	PIN/SNAP	*	2					
20	6215-542-005-10	PIN	*	1 -335019					
20A	6215-542-005-20	PIN	*	1 335020-		1			
21	6209-600-004-00	PLUG/SCREW	*	1					
22	6209-500-003-00	WASHER/08X14X01	*	1					
23	6209-740-001-00	PIN,GROOVE	*	1					
24	6211-312-003-20	GASKET/GEARCASE	*	1					
25	6213-160-002-20	VALVE/RELIEF ASSY	*	1					

FIG. 9 TIMING GEAR CASE

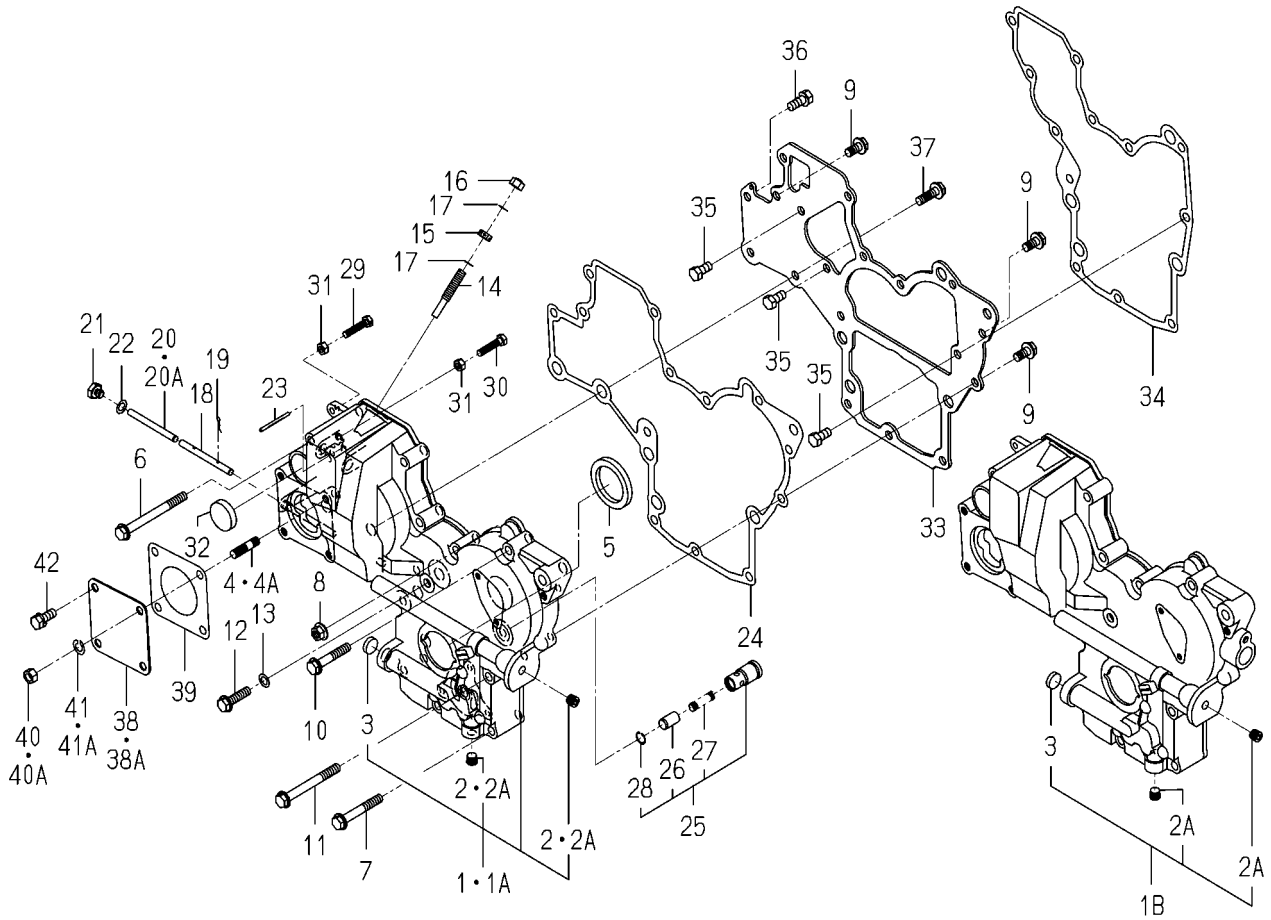

6004-240X-0100,6004-240X-0200

KEY	PART CODE	DESCRIPTION	SPC	TYPE OF MODEL E3112 UP		ITC	COL	GRP	REMARKS
26	6213-161-001-20	PISTON/VALVE/RELIEF	*	1					
27	6213-164-001-00	SPRING/RELIEF VALVE	*	1					
28	V705-140-012-00	RING,SNAP/12 C	*	1					
29	6209-050-001-00	BOLT/M6	*	1					
30	6209-050-002-00	BOLT/M6	*	1					
31	V301-260-006-00	NUT/M6	*	2					
32	3625-540-004-00	CAP,BLANK/30	*	1					
33	6211-311-048-10	PLATE/FRONT	*	1					
34	6211-312-004-20	GASKET/PLATE	*	1					
35	6902-050-816-00	BOLT	*	3					
36	V211-560-802-00	BOLT/M8X20	*	1					
37	V231-360-802-50	FLANGEBOLT	*	2					
38	6511-321-083-00	COVER	*	1 -309387					
38A	6211-321-022-00	COVER/HYDRAULIC	*	1 309388-					
39	6211-322-002-00	GASKET/COVER	*	1					
40	V304-260-008-00	NUT	*	4 -326963					
40A	V304-260-008-00	NUT	*	1 326964-					
41	V401-160-008-00	WASHER,SP/M 8	*	4 -326963					
41A	V401-160-008-00	WASHER,SP/M 8	*	1 326964-					
42	V211-560-802-00	BOLT/M8X20	*	3 326964-					

FIG. 10 HANGER

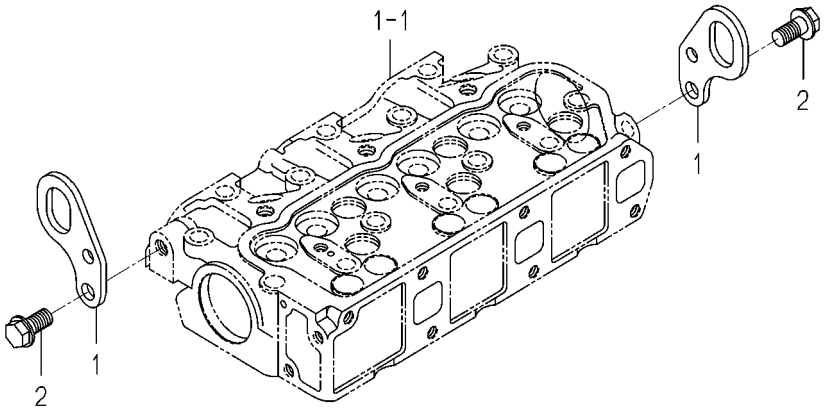

6003-290 -0100

KEY	PART CODE	DESCRIPTION	SPC	TYPE OF MODEL E3112 UP		ITC	COL	GRP	REMARKS
1	6211-777-007-30	HANGER	*	2					
2	V233-361-002-00	FLANGEBOLT	*	2					

FIG. 11 VALVE

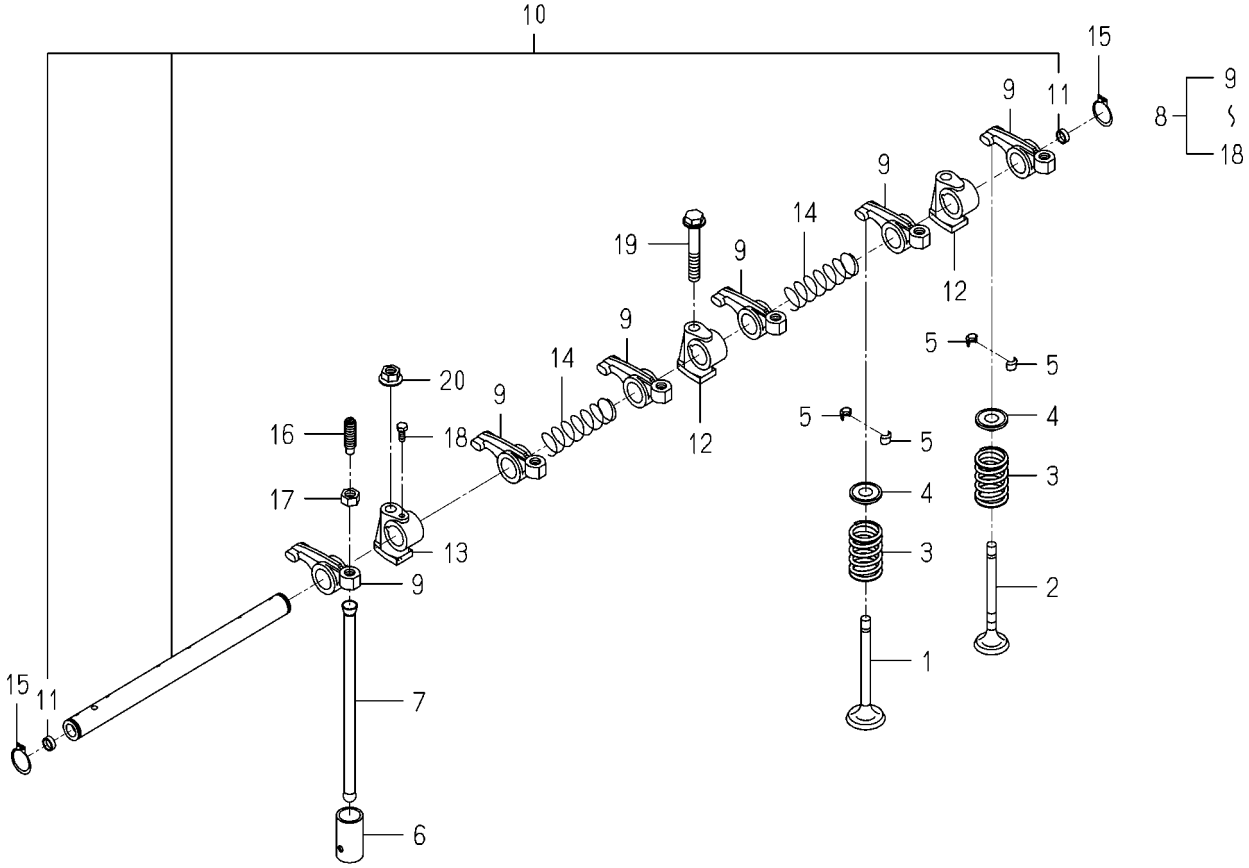

6004-301 -0100

KEY	PART CODE	DESCRIPTION	SPC	TYPE OF MODEL E3112 UP		ITC	COL	GRP	REMARKS
1	6212-551-028-00	VALVE/INTAKE	*	3					
2	6212-552-014-00	VALVE/EXHAUST	*	3					
3	6212-561-001-10	SPRING/VALVE	*	6					
4	6212-563-001-00	SEAT,VALVE SPRING	*	6					
5	6212-565-001-00	CUTTER,VALVE	*	12					
6	6212-571-006-00	TAPPET	*	6					
7	6212-575-002-00	ROD,PUSH	*	6					
8	6212-600-002-10	ROCKERSHAFT ASSY	*	1					
9	6212-611-004-10	ROCKERARM	*	6					
10	6212-620-001-20	SHAFT/ROCKERARM ASSY	*	1					
11	6212-626-002-10	PLUG	*	2					
12	6212-628-004-00	BRACKET ROCKER SHAFT	*	2					
13	6212-628-005-00	BRACKET,ROCKER SHAFT	*	1					
14	6209-940-004-00	SPRING	*	2					
15	V704-140-016-00	RING,SNAP/16 C	*	2					
16	6212-616-002-00	SCREW ADJUST	*	6					
17	6209-409-003-00	NUT	*	6					
18	6209-000-002-00	BOLT	*	1					
19	V231-360-805-00	FLANGEBOLT	*	1					
20	3817-401-001-00	NUT/M08	*	2					

FIG. 12 CAM SHAFT

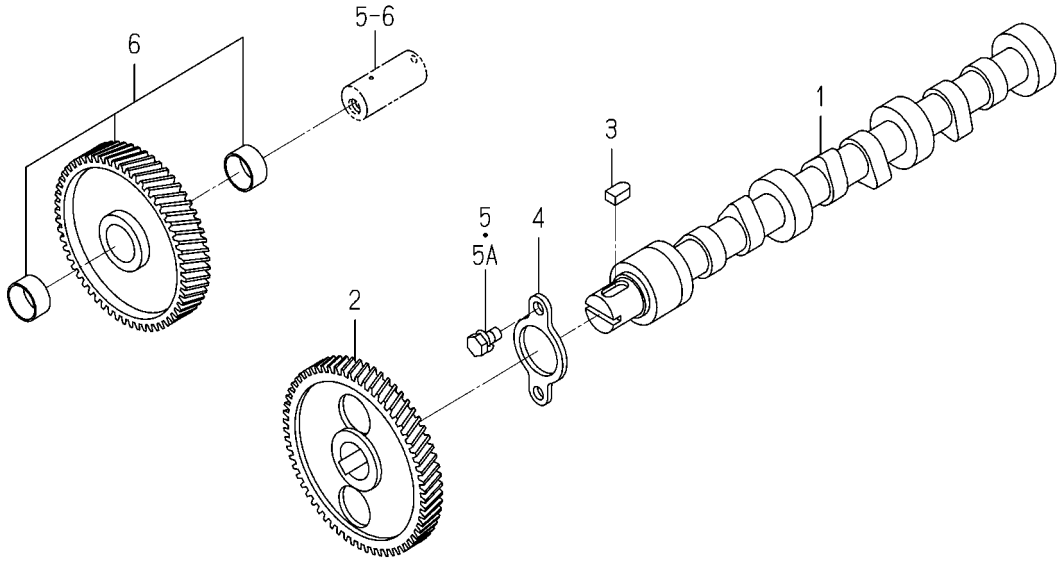

6003-310 -0100

KEY	PART CODE	DESCRIPTION	SPC	TYPE OF MODEL E3112 UP		ITC	COL	GRP	REMARKS
1	6212-511-002-00	SHAFT,CAM	*	1					
2	6212-522-010-00	GEAR/CAMSHAFT	*	1					
3	6209-730-005-00	KEY/07X05X09	*	1					
4	6212-535-001-00	PLATE,THRUST	*	1					
5	6901-910-612-00	BOLT,SEMS/M6X12	*	2 -336180					
5A	V210-560-601-20	BOLT/S	*	2 336181-					
6	6212-523-023-00	GEAR/IDLE ASSY	*	1					

FIG. 13 PISTON

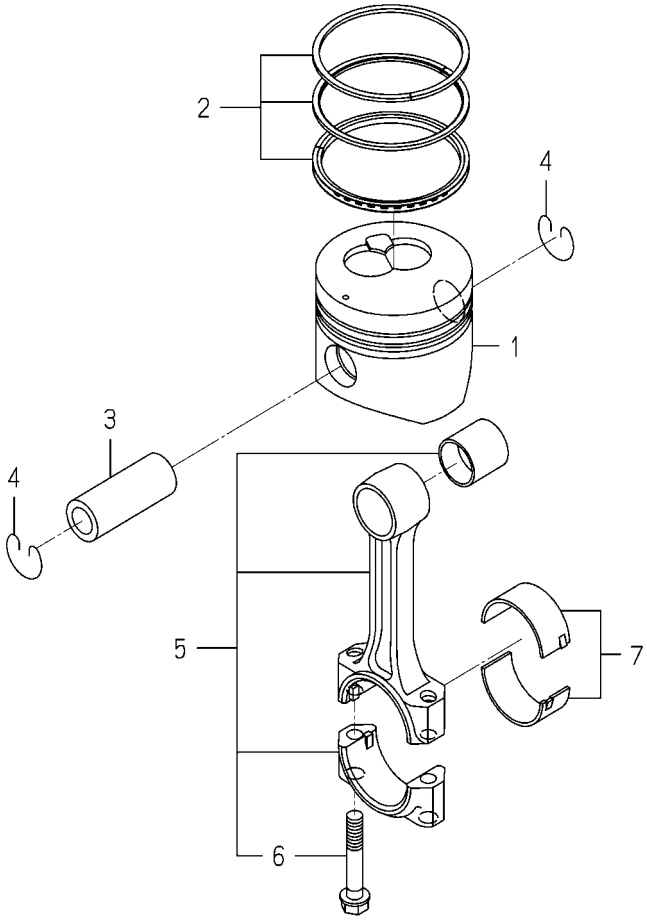

6004-340I-0100

KEY	PART CODE	DESCRIPTION	SPC	TYPE OF MODEL E3112 UP		ITC	COL	GRP	REMARKS
1	6212-111-094-20	PISTON	*	3					
2	6212-121-014-20	RING/PISTON SET	*	3					
3	6212-211-001-10	PIN,PISTON	*	3					
4	6209-587-001-00	RING,SNAP	*	6					
5	6212-230-004-10	CONNECTINGROD ASSY	*	3					
6	6212-235-005-00	BOLT/CONNECTINGROD	*	6					
7	6212-271-016-00	BEARING/CONNECTING R	*	3					

FIG. 14 PISTON/OVER SIZE (OPTION)

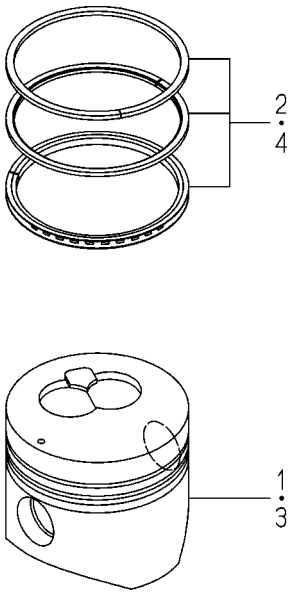

6004-349I-0100

KEY	PART CODE	DESCRIPTION	SPC	TYPE OF MODEL E3112 UP		ITC	COL	GRP	REMARKS
1	6212-114-094-20	PISTON(OV) 78.7	T	3					
2	6212-124-014-10	RING/PISTON/OV SET	T	3					
3	6212-116-094-20	PISTON(OV) 79.2	T	3					
4	6212-126-014-10	RING/PISTON/OV SET	T	3					

FIG. 15 CRANK SHAFT

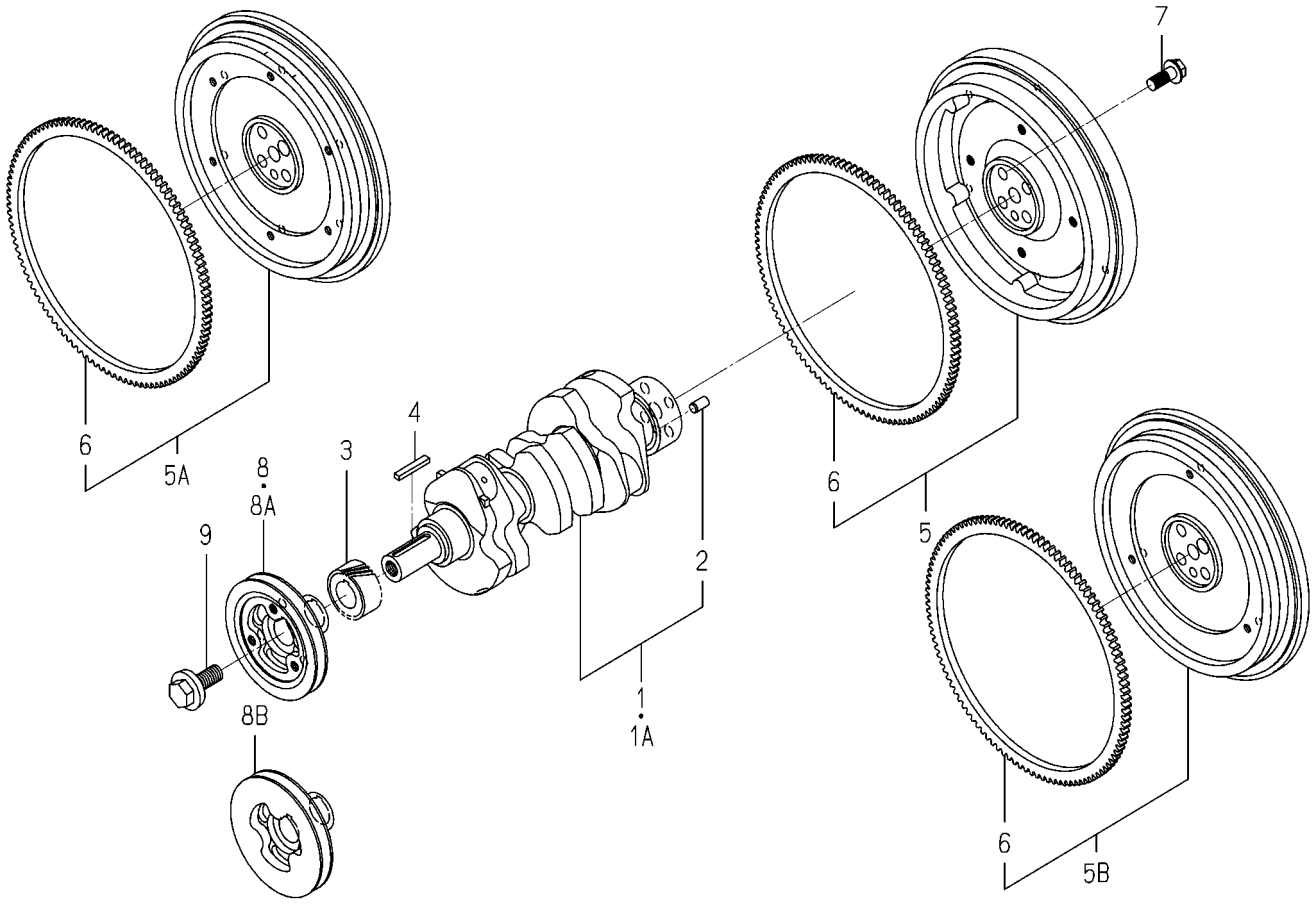

6004-351 -0100

KEY	PART CODE	DESCRIPTION	SPC	TYPE OF MODEL E3112 UP		ITC	COL	GRP	REMARKS
1	6212-310-009-40	CRANKSHAFT ASSY	*	1 -341095					
1A	6212-310-009-50	CRANKSHAFT ASSY	*	1 341096-		1			
2	V523-101-001-80	PIN	*	1					
3	6212-521-008-00	GEAR/CRANK	*	1					
4	6209-730-006-00	KEY/07X05X43	*	1					
5	6212-330-013-30	FLYWHEEL	*	1 -301041					
5A	6212-330-095-00	FLYWHEEL ASSY	*	1 -359417					
5B	6212-330-095-10	FLYWHEEL ASSY	*	1 359418-		1			
6	6212-333-003-00	RINGGEAR	*	1					
7	6209-046-015-00	BOLT/FLANGE	*	4					
8	6212-371-035-10	PULLEY/CRANK	*	1 -322990					
8A	6212-371-035-20	PULLEY/CRANK	*	1 -360532		1			
8B	6212-371-073-00	PULLEY/CRANK	*	1 360533-					
9	6209-000-043-00	BOLT/CRANK	*	1					

FIG. 16 OIL PUMP

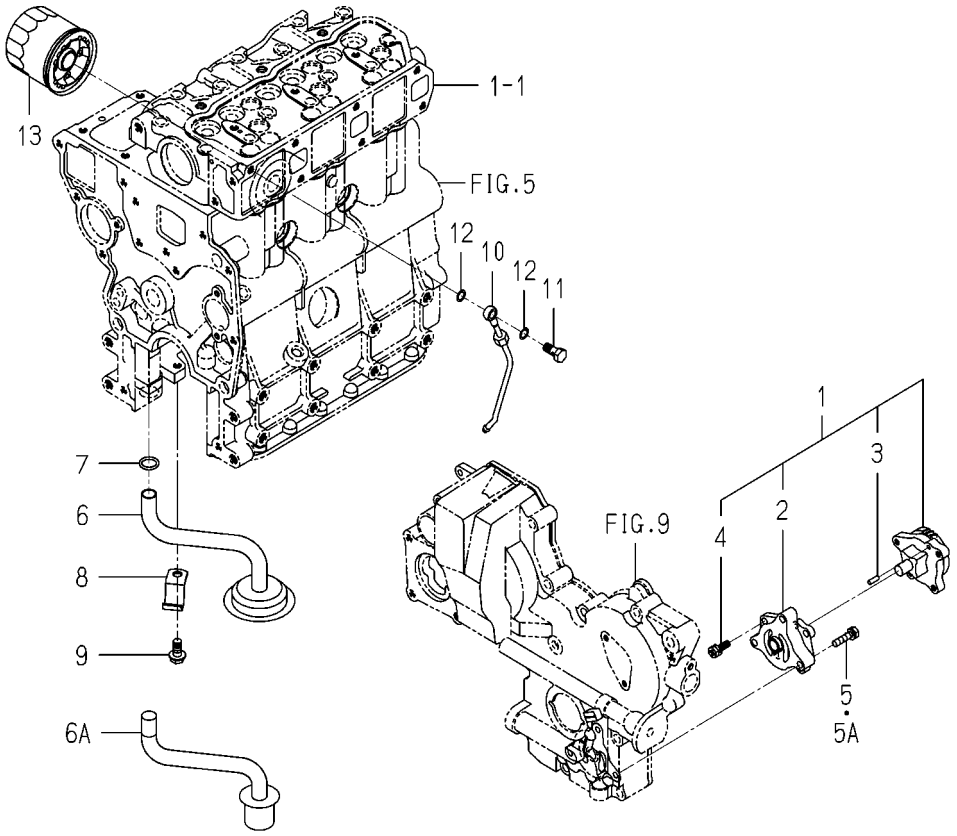

6004-401A-0100

KEY	PART CODE	DESCRIPTION	SPC	TYPE OF MODEL E3112 UP		ITC	COL	GRP	REMARKS
1	6213-100-003-30	OILPUMP ASSY	*	1					
2	6213-111-001-30	BODY/OILPUMP	*	1					
3	6213-129-003-00	PIN/STRAIGHT	*	2					
4	6213-119-001-00	BOLT/WS	*	3					
5	6901-910-625-00	BOLT	*	3 -343508					
5A	V210-560-602-50	BOLT/S	*	3 343509-					
6	6213-140-002-10	STRAINER COMP	*	1 -306520					
6A	6213-140-032-00	STRAINER	*	1 306521-					
7	V720-102-401-50	O-RING/P15	*	1					
8	6213-149-001-00	CLAMP,STRAINER	*	1					
9	V231-360-801-60	FLANGEBOLT	*	1					
10	6213-311-006-00	PIPE,OIL	*	1					
11	6909-906-105-10	BOLT,JOINT	*	1					
12	6209-920-002-00	PACKING	*	2					
13	6213-240-002-10	CARTRIDGE/OILFILTER	*	1					

FIG. 17 WATER PUMP

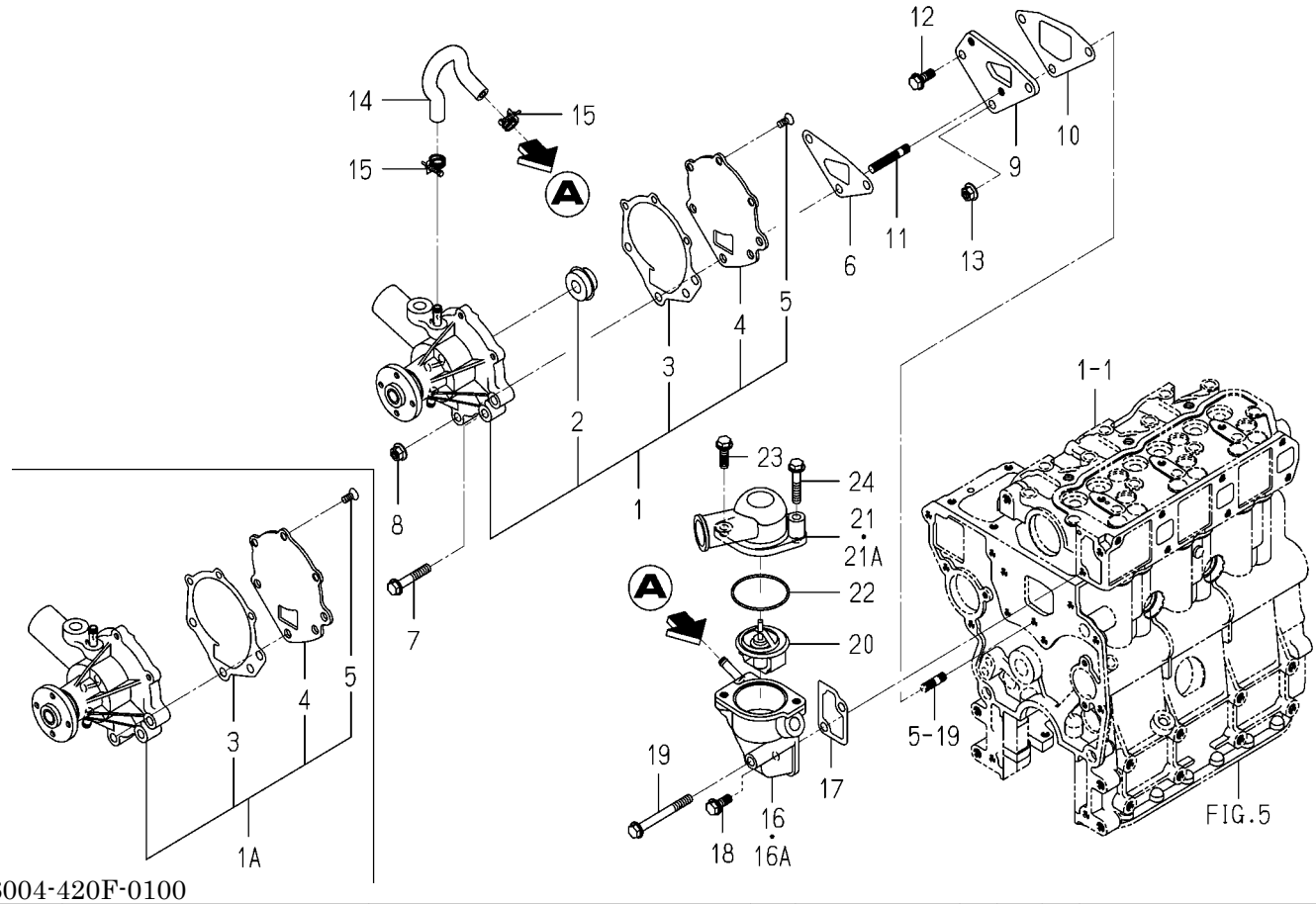

6004-420F-0100

KEY	PART CODE	DESCRIPTION	SPC	TYPE OF MODEL E3112 UP		ITC	COL	GRP	REMARKS
1	6213-610-005-40	WATERPUMP ASSY	*	1 -337627					
1A	6213-610-005-50	WATERPUMP ASSY	*	1 337628-		1			
2	6213-622-002-10	SEAL SET/WATER PUMP	*	1 -337627					
3	6213-613-002-10	GASKET	*	1					
4	6213-612-004-00	PLATE/WATER PUMP	*	1					
5	6213-619-003-00	SCREW/WATER PUMP	*	3					
6	6213-614-003-10	GASKET/WATER PUMP	*	1					
7	V231-360-804-50	FLANGEBOLT	*	1					
8	3817-401-001-00	NUT/M08	*	2					
9	6213-619-001-00	SPACER,PUMP.WATER	*	1					
10	6213-614-004-10	GASKET,SPACER	*	1					
11	6904-110-840-00	STUD/M8X40	*	2					
12	V231-360-802-00	FLANGEBOLT	*	1					
13	3817-401-001-00	NUT/M08	*	1					
14	6213-729-013-10	HOSE/RUBBER	*	1					
15	J061-210-015-00	CLAMP/WIRE/10-15	*	2					
16	6213-716-001-50	HOUSING/THERMOSTAT	*	1 -334634					
16A	6213-716-001-60	HOUSING/THERMOSTAT	*	1 334635-		1			
17	6213-743-002-10	GASKET/HOUSING	*	1					
18	V231-360-802-00	FLANGEBOLT	*	1					
19	V231-360-807-50	FLANGEBOLT	*	1					
20	6513-770-022-10	THERMOSTAT	*	1					
21	6213-711-015-00	PIPE/WATEROUTRET	*	1 -343967					
21A	6213-711-018-00	PIPE/WATEROUTLET	*	1 343968-					
22	V723-102-005-50	O-RING	*	1					
23	V231-360-802-50	FLANGEBOLT	*	1					
24	V231-360-804-00	FLANGEBOLT	*	1					

FIG. 18 COOLING FAN

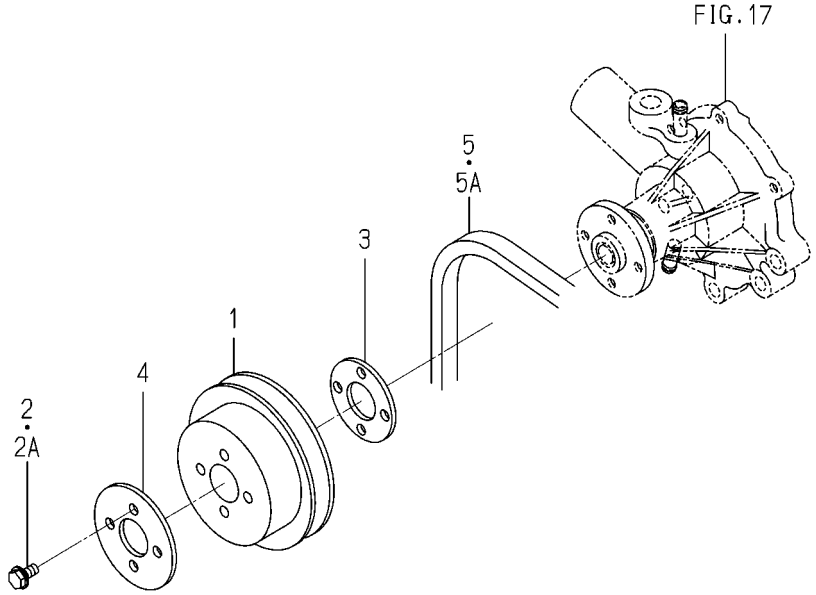

6004-480Y-0100

KEY	PART CODE	DESCRIPTION	SPC	TYPE OF MODEL E3112 UP		ITC	COL	GRP	REMARKS
1	6213-641-022-10	PULLEY/WATERPUMP	*	1					
2	V230-360-601-20	FLANGEBOLT	*	4 -332734					
2A	V230-360-601-60	FLANGEBOLT	*	4 332735-					
3	6213-669-021-00	SPACER/FAN	*	1					
4	6213-669-022-00	SPACER/FAN	*	1 334924-					
5	6213-671-052-00	BELT/VCOGA36.0	*	1 -321680					
5A	6213-671-053-00	BELT/VNR5A36.0	*	1 321681-					

FIG. 19 INJECTION NOZZLE

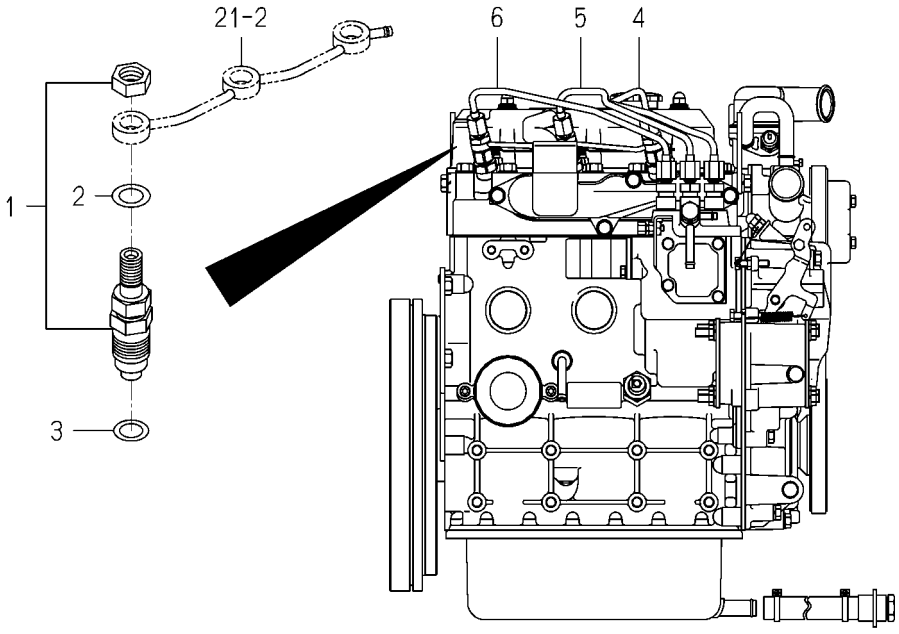

6004-501C-0100

KEY	PART CODE	DESCRIPTION	SPC	TYPE OF MODEL E3112 UP		ITC	COL	GRP	REMARKS
1	6215-300-036-10	INJECTIONNOZZLE ASSY	*	3					FIG 026
2	6215-359-001-00	WASHER	*	3					
3	6215-315-002-00	GASKET,NOZZLE	*	3					
4	6215-411-126-10	PIPE/INJECTION ASSY	*	1					
5	6215-411-127-00	PIPE/INJECTION ASSY	*	1					
6	6215-411-128-00	PIPE/INJECTION ASSY	*	1					

FIG. 20 INJECTION PUMP

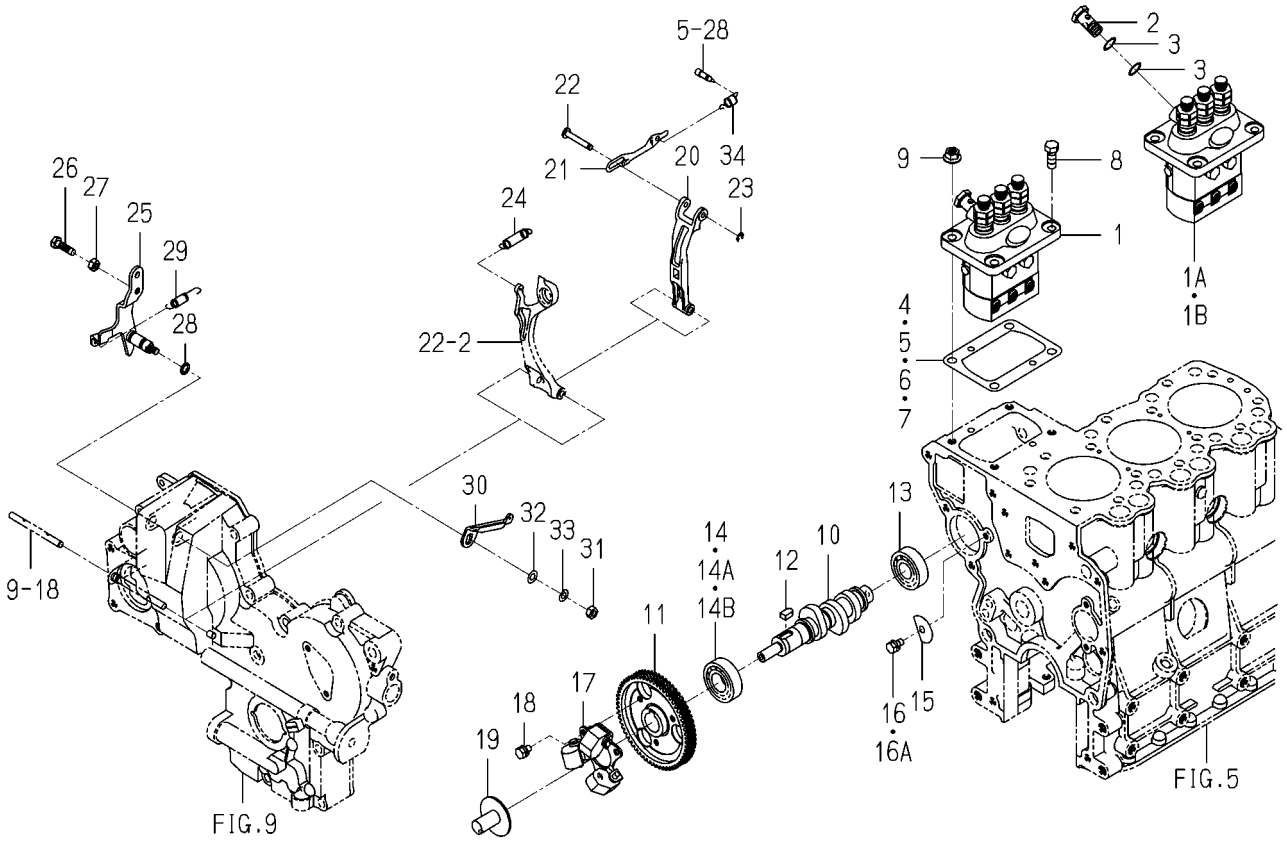

6004-510O-0100

KEY	PART CODE	DESCRIPTION	SPC	TYPE OF MODEL E3112 UP		ITC	COL	GRP	REMARKS
1	6215-600-103-10	INJECTIONPUMP ASSY	*	1 -321421					FIG 027
1A	6215-600-103-20	INJECTIONPUMP ASSY	*	1 -323188		3			FIG 027
1B	6215-600-103-30	INJECTIONPUMP ASSY	*	1 323189-		1			FIG 027
2	6215-619-010-00	WASHER/AIR BLEEDER	*	2 321422-					
3	6215-619-009-00	SCREW/HOLLOW	*	1 321422-					
4	6219-752-045-00	SHIM/INJECTIONPUMP	*	1					
5	6219-752-044-00	SHIM/INJECTIONPUMP	*	1					
6	6219-752-046-00	SHIM/INJECTIONPUMP	*	1					
7	6219-752-047-00	SHIM/INJECTIONPUMP	*	1					
8	V201-360-802-00	BOLT/M8X20	*	2					
9	3817-401-001-00	NUT/M08	*	2					
10	6215-621-016-20	CAMSHAFT/INJECTION P	*	1					
11	6212-524-002-30	GEAR/INJECTIONPUMP	*	1					
12	6209-730-005-00	KEY/07X05X09	*	1					
13	V600-110-620-30	BEARING,RB/6203	*	1					
14	V600-110-600-40	BEARING,RB/6004	*	1 -325776					
14A	V600-410-600-40	BEARING/BALL	*	1 -328006					
14B	1729-202-001-00	BEARING/BALL	*	1 328007-					
15	6212-535-002-00	PLATE,THRUST INJPUMP	*	1					
16	6901-910-612-00	BOLT,SEMS/M6X12	*	1 -336180					
16A	V210-560-601-20	BOLT/S	*	1 336181-					
17	6215-520-001-00	FLYWEIGHT	*	1					
18	6209-030-043-00	BOLT/M6X10	*	3					
19	6215-526-004-00	THRUSTPIECE	*	1					
20	6215-541-001-10	ARM/FLOATING COMP	*	1					
21	6215-543-002-10	RINK/CONTROL	*	1					
22	6215-542-006-00	PIN,CONTROL	*	1					
23	V710-140-004-00	RING,SNAP/ 4 E	*	1					
24	6215-531-008-00	SPRING/GOVERNOR	*	1					
25	6215-541-012-20	LEVER(CONTROL) COMP	*	1					

FIG. 20 INJECTION PUMP

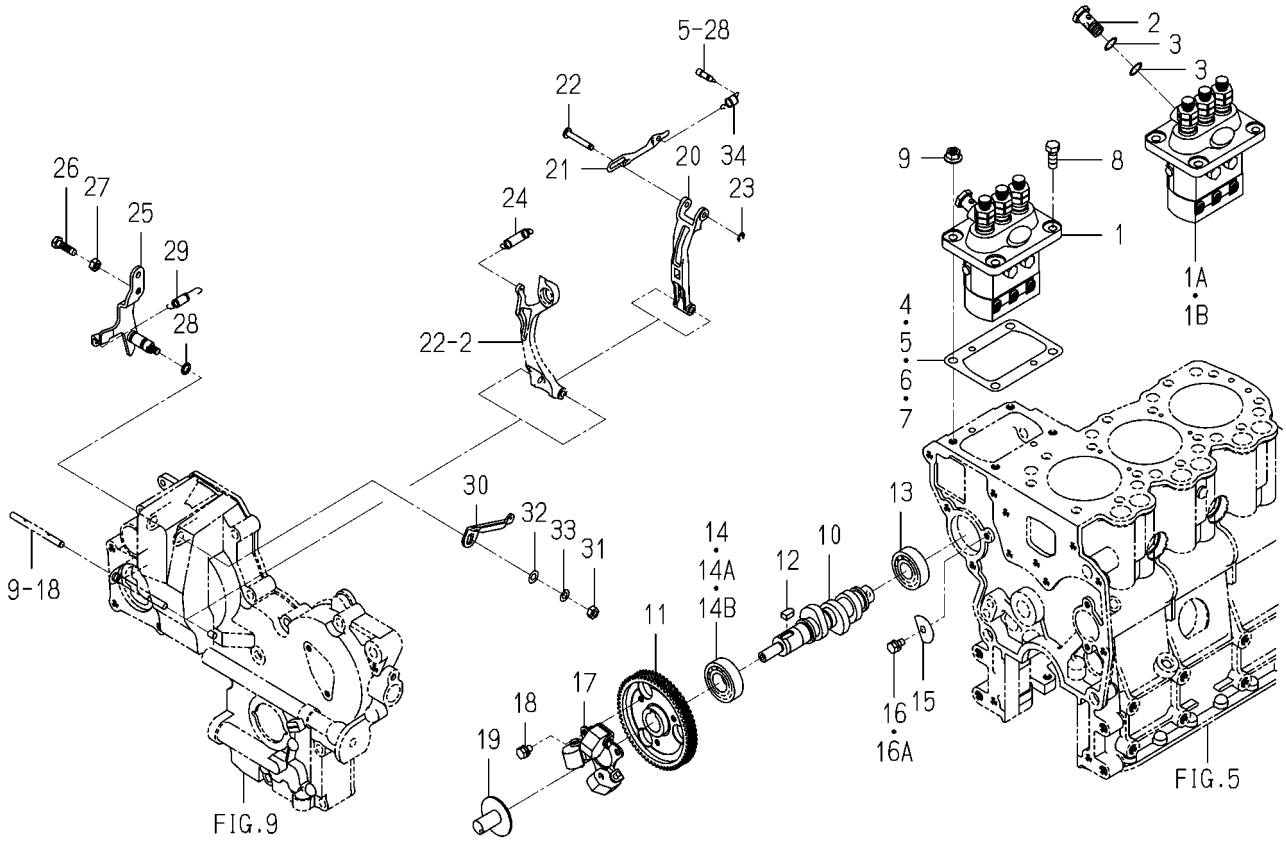

6004-510O-0100

KEY	PART CODE	DESCRIPTION	SPC	TYPE OF MODEL E3112 UP		ITC	COL	GRP	REMARKS
26	6209-044-001-00	BOLT/M6X18	*	1					
27	V302-260-006-00	NUT/M 6	*	2					
28	V720-101-900-80	O-RING/P 8	*	1					
29	6209-580-002-10	SPRING,RETURN	*	1					
30	6215-549-007-10	ARM/CONTROL	*	1					
31	V301-260-006-00	NUT/M6	*	1					
32	V411-260-006-00	WASHER / M6	*	1					
33	V401-160-006-00	WASHER,SP/M 6	*	1					
34	6215-549-012-00	SPRING,STARTING	*	1					

FIG. 21 FUEL PIPE

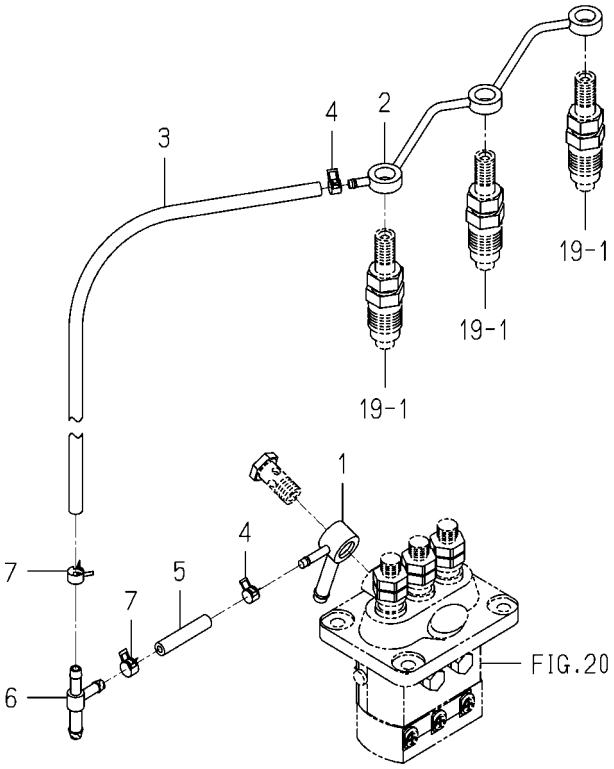

6004-550K-0100

KEY	PART CODE	DESCRIPTION	SPC	TYPE OF MODEL E3112 UP		ITC	COL	GRP	REMARKS
1	6215-412-004-00	CONNECTOR/FUEL	*	1					
2	6215-411-125-00	PIPE/FUEL	*	1					
3	6209-360-018-00	HOSE/RUBBER/160	*	1					
4	J062-076-082-00	CLIP/HOSE/7.6-8.2	*	2					
5	6209-360-006-00	HOSE,RUBBER	*	1					
6	3643-586-001-00	JOINTT-TYPE	*	1					
7	J062-087-093-00	CLIP/HOSE/8.7-9.3	*	2					

FIG. 22 ADAPTER

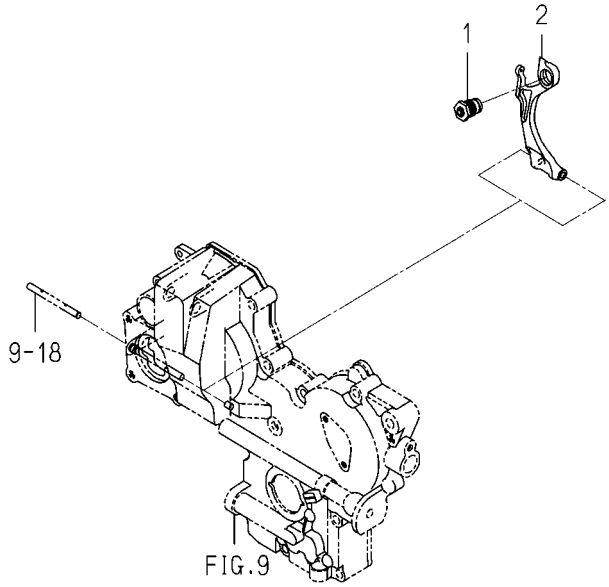

6005-560 -0100

KEY	PART CODE	DESCRIPTION	SPC	TYPE OF MODEL E3112 UP		ITC	COL	GRP	REMARKS
1	6215-548-029-00	ADAPTER/255X065 ASSY	*	1					
2	6215-541-016-40	ARM/TENSION	*	1					

FIG. 23 ELECTRIC (1)

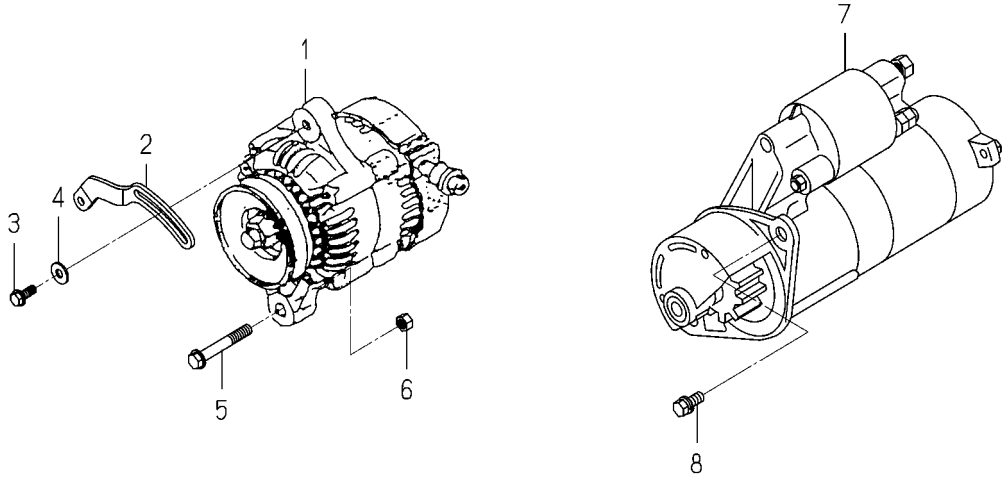

6004-801N-0100,6004-801N-0200

KEY	PART CODE	DESCRIPTION	SPC	TYPE OF MODEL E3112 UP		ITC	COL	GRP	REMARKS
1	6281-200-021-00	GENERATOR ASSY	*	1					FIG 029
2	6213-674-006-20	PLATE/ADJUST	*	1					
3	V231-360-802-00	FLANGEBOLT	*	1					
4	1373-121-001-00	WASHER/9X22X2	*	1					
5	V233-361-007-00	FLANGEBOLT	*	1					
6	V334-260-010-00	NUT/M10	*	1					
7	6281-100-014-00	STARTER ASSY	*	1					FIG 028
8	6901-911-025-00	BOLT	*	2					

FIG. 24 ELECTRIC (2)

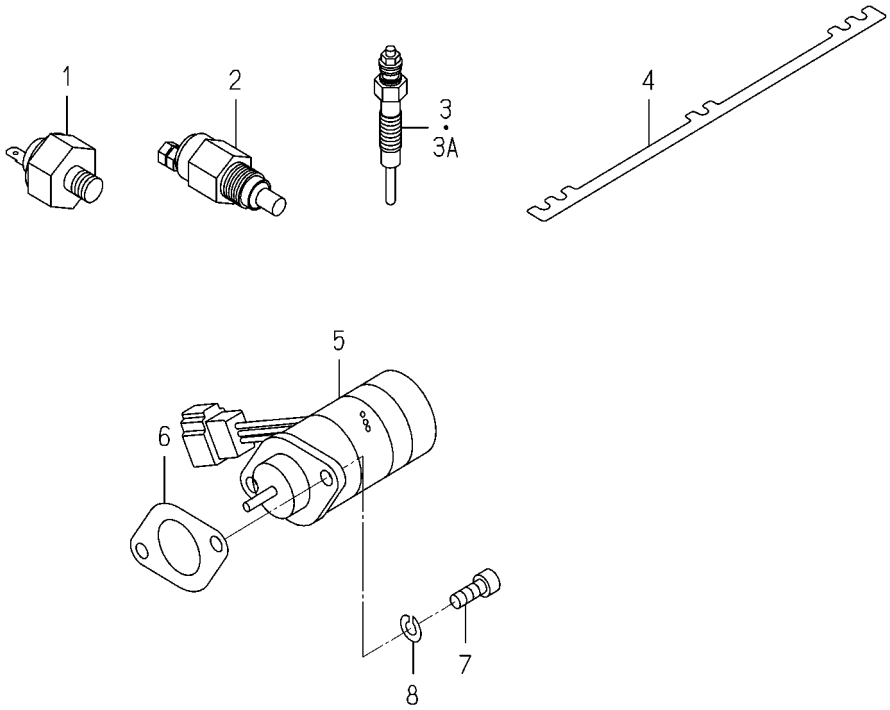

6004-820S-0100,6004-820S-0200

KEY	PART CODE	DESCRIPTION	SPC	TYPE OF MODEL E3112 UP		ITC	COL	GRP	REMARKS
1	6281-971-001-10	SWITCH/OILPRESSURE	*	1					
2	6282-450-008-00	SWITCH/OVERHEAT	*	1					
3	6281-410-024-00	GLOWPLUG	*	3 -362971					
3A	6281-410-026-00	GLOWPLUG	*	3 362972-					
4	6219-732-017-00	CONNECTOR/GLOWPLUG	*	1					
5	6281-910-011-00	SOLENOID	*	1					
6	6209-630-002-10	GASKET	*	1					
7	V220-540-601-60	BOLT	*	2					
8	V401-160-006-00	WASHER,SP/M 6	*	2 360046-					

FIG. 25 REPAIR PARTS(OPTION)

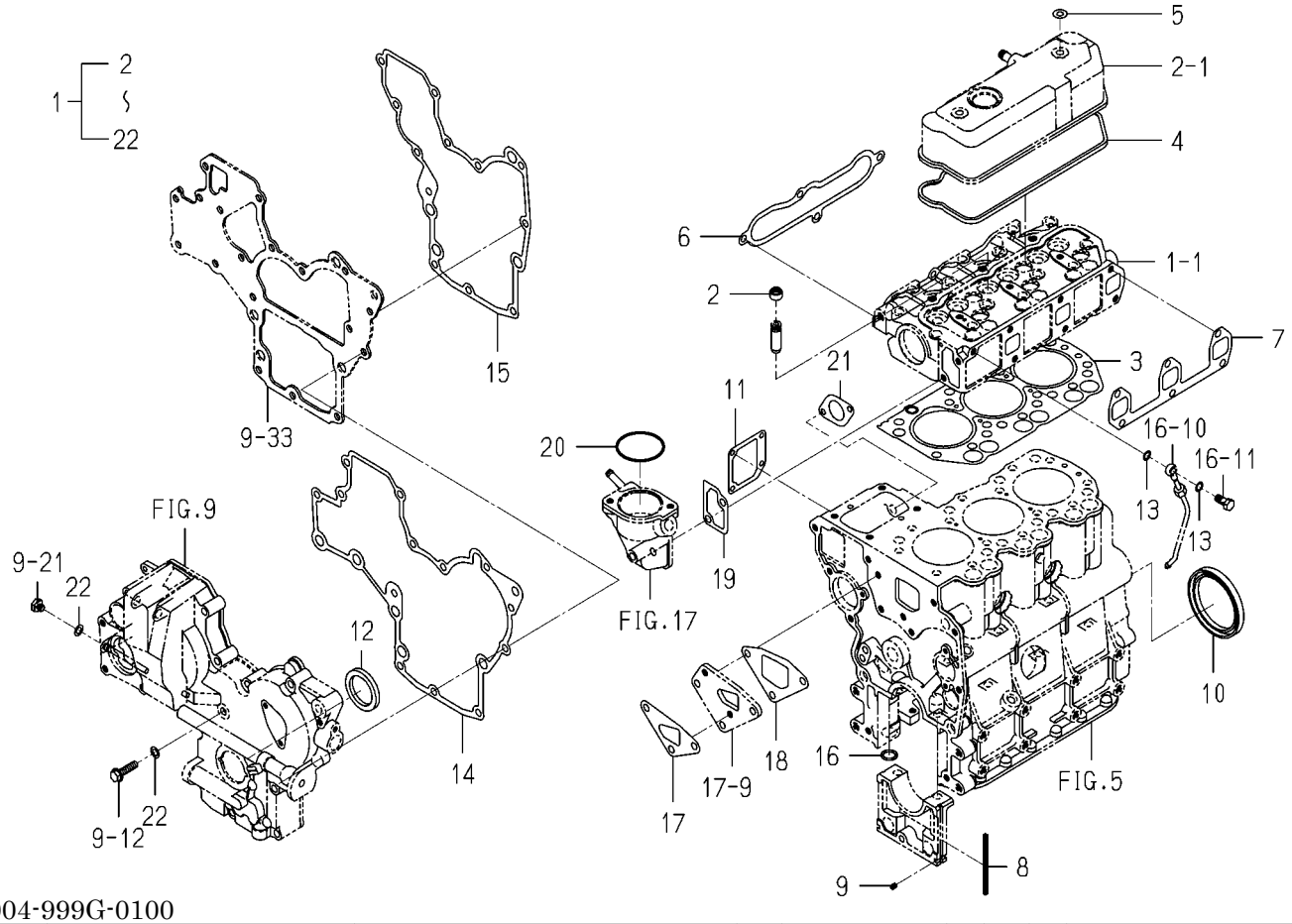

6004-999G-0100

KEY	PART CODE	DESCRIPTION	SPC	TYPE OF MODEL E3112 UP		ITC	COL	GRP	REMARKS
1	6287-810-035-00	REPAIR/ENGINE SET	T	1					
2	6212-569-002-00	SEAL,OIL	T	6					
3	6211-141-029-20	GASKET/CYLINDERHEAD	T	1					
4	6211-173-003-00	SEAL,CYL.HEAD COVER	T	1					
5	6209-572-003-00	GASKET	T	2					
6	6214-115-001-20	GASKET,INLET MANIFOL	T	1					
7	6214-145-001-30	GASKET,EXH.MANIFOLD	T	1					
8	6211-258-001-00	SEAL,BEARING CAP	T	4					
9	6211-258-002-00	SEAL,BEARING CAP/7	T	2					
10	6209-625-001-00	SEAL,OIL	T	1					
11	6211-292-001-20	GASKET/COVER	T	1					
12	6209-625-002-00	SEAL,OIL	T	1					
13	6209-920-002-00	PACKING	T	2					
14	6211-312-003-20	GASKET/GEARCASE	T	1					
15	6211-312-004-20	GASKET/PLATE	T	1					
16	V720-102-401-50	O-RING/P15	T	1					
17	6213-614-003-10	GASKET/WATER PUMP	T	1					
18	6213-614-004-10	GASKET,SPACER	T	1					
19	6213-743-002-10	GASKET/HOUSING	T	1					
20	V723-102-005-50	O-RING	T	1					
21	6209-630-002-10	GASKET	T	1					
22	6209-500-003-00	WASHER/08X14X01	T	2					

FIG. 26 COMPONENT PARTS FOR 6215-300-036-10 ON Fig.019

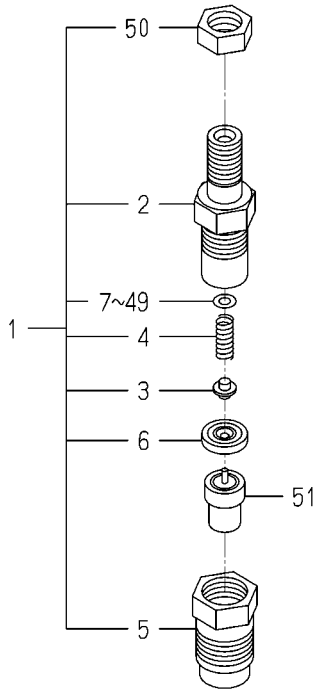

6215-300-036-1B

KEY	PART CODE	DESCRIPTION	SPC	TYPE OF MODEL E3112 UP		ITC	COL	GRP	REMARKS
1	6215-330-024-10	HOLDER/NOZZLE ASSY	*	3					
2	6215-331-008-00	BODY/NOZZLE HOLDER	*	3					
3	6215-342-001-00	PIN,NOZZLE HOLDER	*	3					
4	6215-343-001-00	SPRING/NOZZLEHOLDER	*	3					
5	6215-332-013-00	NUT/NOZZLERETAINING	*	3					
6	6215-339-001-00	PIECE,DISTANCE	*	3					
7	6215-345-001-00	WASHER/0.9	*	3					
8	6215-345-002-00	WASHER/0.925	*	3					
9	6215-345-003-00	WASHER/0.95	*	3					
10	6215-345-004-00	WASHER/0.975	*	3					
11	6215-345-005-00	WASHER/1.0	*	3					
12	6215-345-006-00	WASHER/1.025	*	3					
13	6215-345-007-00	WASHER/1.05	*	3					
14	6215-345-008-00	WASHER/1.075	*	3					
15	6215-345-009-00	WASHER/1.1	*	3					
16	6215-345-010-00	WASHER/1.125	*	3					
17	6215-345-011-00	WASHER/1.15	*	3					
18	6215-345-012-00	WASHER/1.175	*	3					
19	6215-345-013-00	WASHER/1.2	*	3					
20	6215-345-014-00	WASHER/1.225	*	3					
21	6215-345-015-00	WASHER/1.25	*	3					
22	6215-345-016-00	WASHER/1.275	*	3					
23	6215-345-017-00	WASHER/1.3	*	3					
24	6215-345-018-00	WASHER/1.325	*	3					
25	6215-345-019-00	WASHER/1.35	*	3					
26	6215-345-020-00	WASHER/1.375	*	3					
27	6215-345-021-00	WASHER/1.4	*	3					
28	6215-345-022-00	WASHER/1.425	*	3					
29	6215-345-023-00	WASHER/1.45	*	3					
30	6215-345-024-00	WASHER/1.475	*	3					

FIG. 26 COMPONENT PARTS FOR 6215-300-036-10 ON Fig.019

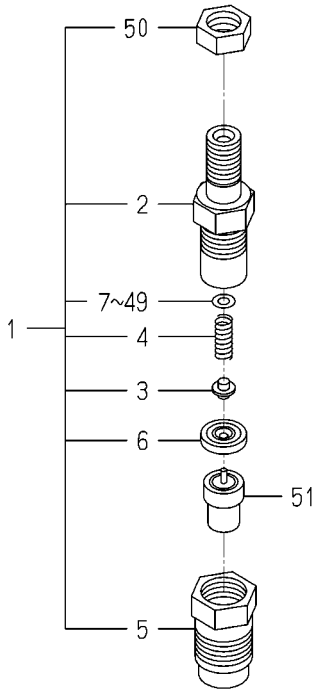

6215-300-036-1B

KEY	PART CODE	DESCRIPTION	SPC	TYPE OF MODEL E3112 UP		ITC	COL	GRP	REMARKS
31	6215-345-025-00	WASHER/1.5	*	3					
32	6215-345-026-00	WASHER/1.525	*	3					
33	6215-345-027-00	WASHER/1.55	*	3					
34	6215-345-028-00	WASHER/1.575	*	3					
35	6215-345-029-00	WASHER/1.6	*	3					
36	6215-345-030-00	WASHER/1.625	*	3					
37	6215-345-031-00	WASHER/1.65	*	3					
38	6215-345-032-00	WASHER/1.675	*	3					
39	6215-345-033-00	WASHER/1.7	*	3					
40	6215-345-034-00	WASHER/1.725	*	3					
41	6215-345-035-00	WASHER/1.75	*	3					
42	6215-345-036-00	WASHER/1.775	*	3					
43	6215-345-037-00	WASHER/1.8	*	3					
44	6215-345-038-00	WASHER/1.825	*	3					
45	6215-345-039-00	WASHER/1.85	*	3					
46	6215-345-040-00	WASHER/1.875	*	3					
47	6215-345-041-00	WASHER/1.9	*	3					
48	6215-345-042-00	WASHER/1.925	*	3					
49	6215-345-043-00	WASHER/1.95	*	3					
50	6215-359-002-00	NUT	*	3					
51	6215-311-027-00	NOZZLE ASSY	*	3					

FIG. 27 COMPONENT PARTS FOR 6215-600-103-30 ON Fig.020

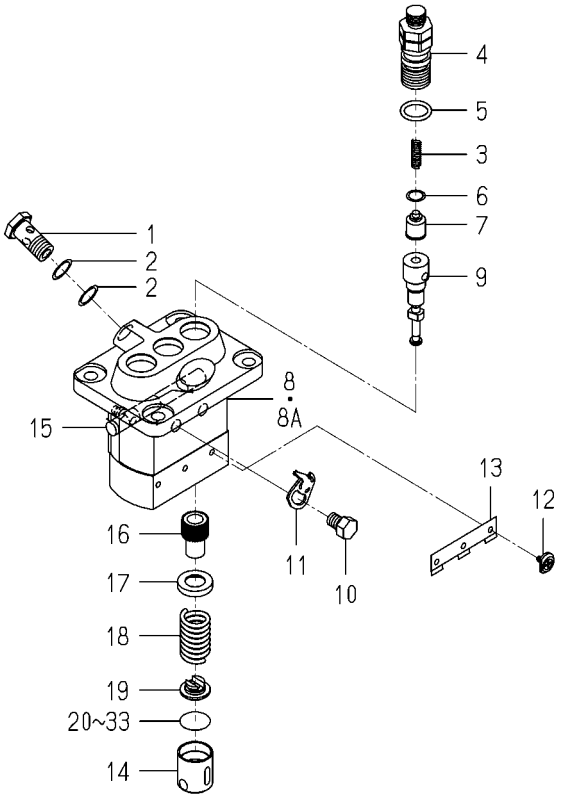

6215-600-103-3I

KEY	PART CODE	DESCRIPTION	SPC	TYPE OF MODEL E3112 UP		ITC	COL	GRP	REMARKS
1	6215-619-009-00	SCREW/HOLLOW	*	1 -321421					
2	6215-619-010-00	WASHER/AIR BLEEDER	*	2 -321421					
3	6215-643-006-00	SPRING/DELIVERYVALVE	*	3					
4	6215-644-007-00	HOLDER/DELIVERYVALVE	*	3					
5	6215-649-019-00	ORING	*	3					
6	6215-649-002-00	GASKET/DELIVERYVALVE	*	3					
7	6215-641-006-00	VALVE ASSY	*	3					
8	6215-611-017-00	HOUSING ASSY	*	1 -323188					
8A	6215-611-001-00	HOUSING ASSY	*	1 323189-					
9	6215-631-019-00	ELEMENT ASSY	*	3					
10	6215-619-022-00	BOLT/WASHERHEAD	*	2					
11	6215-612-001-00	PLATE/ADJUSTING	*	2					
12	6215-629-001-00	PIN/INJECTIONPUMP	*	3					
13	6215-629-002-00	PLATE	*	1					
14	6215-622-001-00	TAPPET/INJECTIO ASSY	*	3					
15	6215-637-001-00	RACK/CONTROL ASSY	*	1					
16	6215-635-001-00	SLEEVE/PLUNGER	*	3					
17	6215-639-004-00	SEAT/SPRING/UPPER	*	3					
18	6215-634-001-00	SPRING/PUMPPLUNGER	*	3					
19	6215-639-005-00	SEAT/SPRING/LOWER	*	3					
20	6215-629-003-00	PLATE/TAPPET/AD 0.6	*	1					
21	6215-629-004-00	PLATE/TAPPET/AD 0.7	*	1					
22	6215-629-005-00	PLATE/TAPPET/AD 0.8	*	1					
23	6215-629-006-00	PLATE/TAPPET/AD 0.9	*	1					
24	6215-629-007-00	PLATE/TAPPET/AD 1.0	*	1					
25	6215-629-008-00	PLATE/TAPPET/AD 0.2	*	1					
26	6215-629-009-00	PLATE/TAPPET/AD 0.3	*	1					
27	6215-629-010-00	PLATE/TAPPET/AD 0.4	*	1					
28	6215-629-011-00	PLATE/TAPPET/AD 0.5	*	3					
29	6215-629-012-00	PLATE/TAPPET/AD 0.25	*	1					

FIG. 27 COMPONENT PARTS FOR 6215-600-103-30 ON Fig.020

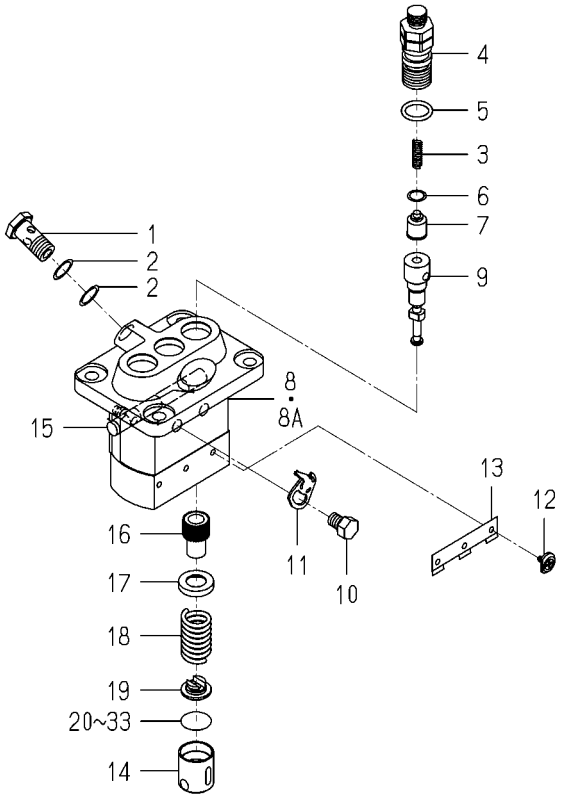

6215-600-103-3I

KEY	PART CODE	DESCRIPTION	SPC	TYPE OF MODEL E3112 UP		ITC	COL	GRP	REMARKS
30	6215-629-013-00	PLATE/TAPPET/AD 0.35	*	1					
31	6215-629-014-00	PLATE/TAPPET/AD 0.45	*	1					
32	6215-629-015-00	PLATE/TAPPET/AD 0.55	*	1					
33	6215-629-016-00	PLATE/TAPPET/AD 0.65	*	1					

FIG. 28 COMPONENT PARTS FOR 6281-100-014-00 ON Fig.023

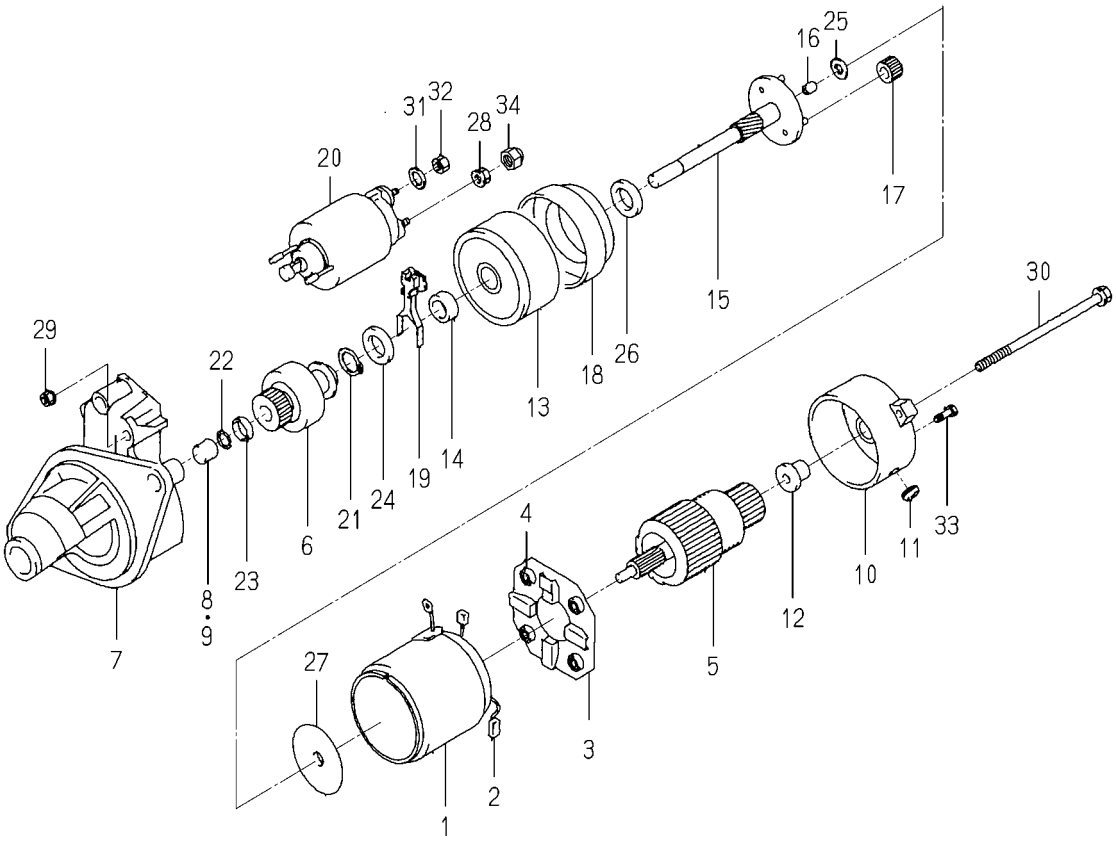

6281-100-014-0A

KEY	PART CODE	DESCRIPTION	SPC	TYPE OF MODEL E3112 UP		ITC	COL	GRP	REMARKS
1	6281-111-009-00	YOKE/STARTER ASSY	*	1					
2	6281-119-009-00	BRUSH/STARTER	*	2					
3	6281-118-007-00	HOLDER/STARTER ASSY	*	1					
4	6281-117-003-00	SPRING/STARTERBRUSH	*	4					
5	6281-121-010-00	ARMATURE/STARTE ASSY	*	1					
6	6281-124-011-00	CLUTCH/STARTER ASSY	*	1					
7	6281-129-064-00	HOUSING/STARTER ASSY	*	1					
8	6281-129-080-00	BEARING/NEEDLE	*	1					
9	6281-129-058-00	BEARING/NEEDLE	*	1					
10	6281-115-017-00	FRAME/COMMUTATOR END	*	1					
11	6281-115-018-00	COVER	*	1					
12	6281-129-065-00	BEARING/OILLESS	*	1					
13	6281-129-066-00	BEARING/WITH SHOCKAB	*	1					
14	6281-129-067-00	BEARING/OILLESS	*	1					
15	6281-129-068-00	SHAFT/STARTER PLANET	*	1					
16	6281-129-069-00	BEARING/OILLESS	*	1					
17	6281-129-070-00	GEAR/STARTER PLANETA	*	3					
18	6281-129-071-00	GEAR/STARTERINTERNAL	*	1					
19	6281-127-003-00	LEVER/PINIONDRIVE	*	1					
20	6281-151-014-00	SWITCH/MAGNETIC ASSY	*	1					
21	6281-129-072-00	RING/SNAP	*	1					
22	6281-129-073-00	RING/SNAP	*	1					
23	6281-129-074-00	NUT/PINIONSTOP	*	1					
24	6281-129-075-00	WASHER/SK	*	1					
25	6281-129-076-00	WASHER/SK	*	1					
26	6281-129-077-00	WASHER/SK	*	1					
27	6281-129-078-00	PLATE	*	1					
28	6281-129-030-00	NUT	*	1					
29	6281-129-029-00	NUT	*	2					
30	6281-129-043-00	BOLT/THROUGH	*	2					

FIG. 28 COMPONENT PARTS FOR 6281-100-014-00 ON Fig.023

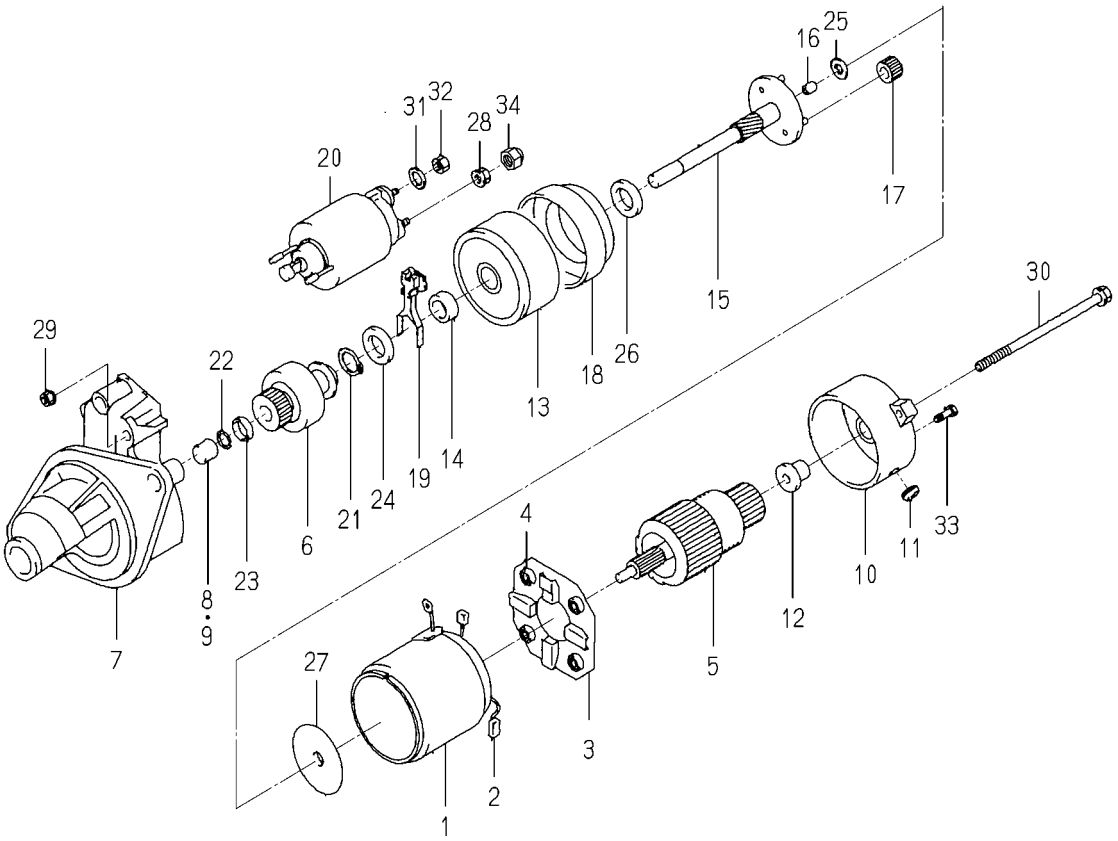

6281-100-014-0A

KEY	PART CODE	DESCRIPTION	SPC	TYPE OF MODEL E3112 UP		ITC	COL	GRP	REMARKS
31	6909-150-508-00	WASHER	*	1					
32	6909-110-408-00	NUT/M8	*	1					
33	6281-129-062-00	SCREW	*	2					
34	6281-129-079-00	NUT	*	1					

FIG. 29 COMPONENT PARTS FOR 6281-200-021-00 ON Fig.023

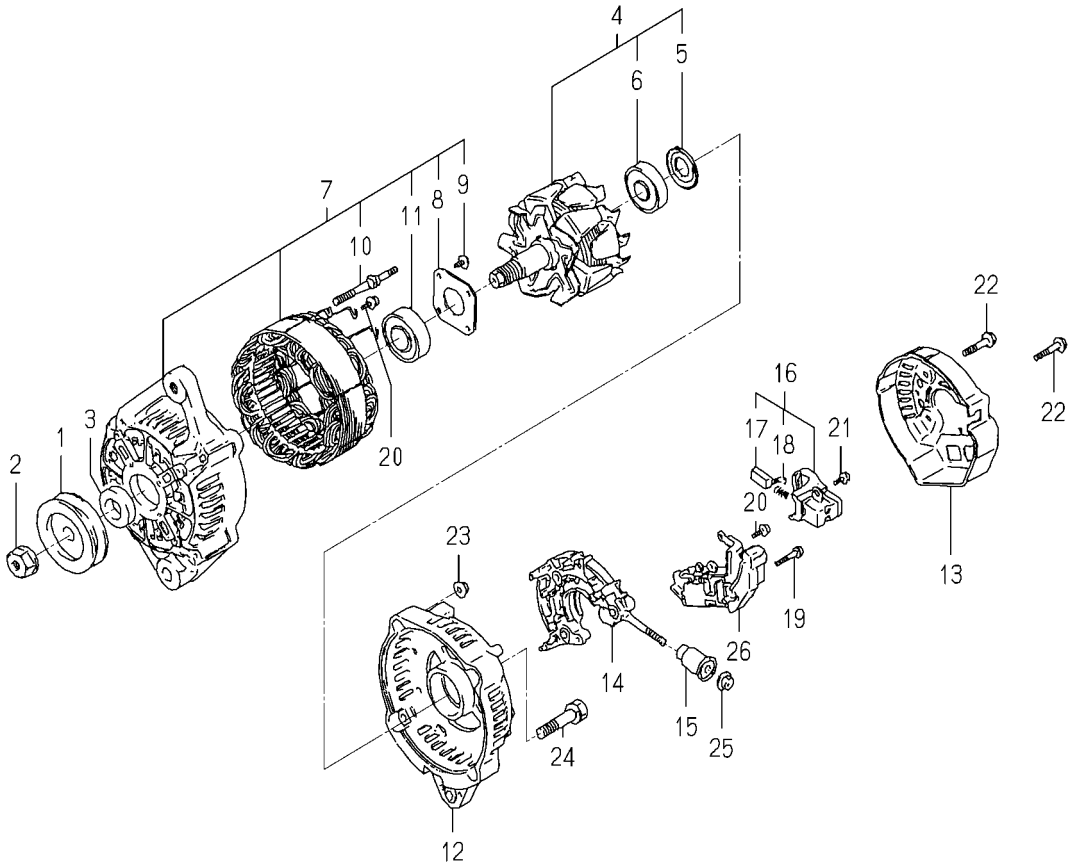

6281-200-021-0A

KEY	PART CODE	DESCRIPTION	SPC	TYPE OF MODEL E3112 UP		ITC	COL	GRP	REMARKS
1	6281-222-012-00	PULLEY	*	1					
2	6281-229-002-00	NUT	*	1					
3	6281-229-003-00	COLLOR	*	1					
4	6281-221-007-00	ROTOR ASSY	*	1					
5	6281-229-004-00	COVER,BEARING	*	1					
6	6281-229-032-00	BEARING/BALL	*	1					
7	6281-213-018-00	FRAME/DRIVEEND ASSY	*	1					
8	6281-229-006-00	PLATE	*	1					
9	6281-229-007-00	BOLT	*	4					
10	6281-229-008-00	BOLT	*	2					
11	6281-229-033-00	BEARING/BALL	*	1					
12	6281-214-003-00	FRAME	*	1					
13	6281-214-004-00	COVER	*	1					
14	6281-229-029-00	HOLDER ASSY	*	1					
15	6281-229-011-00	BUSH	*	1					
16	6281-217-002-00	HOLDER/BRUSH ASSY	*	1					
17	6281-215-001-00	BRUSH	*	2					
18	6281-216-001-00	SPRING	*	2					
19	6281-229-012-00	BOLT	*	2					
20	6281-229-013-00	BOLT	*	6					
21	6281-229-014-00	BOLT	*	1					
22	6281-229-015-00	BOLT	*	3					
23	6281-229-016-00	NUT	*	2					
24	6281-229-017-00	BOLT	*	2					
25	6281-229-018-00	NUT	*	1					
26	6281-271-002-00	REGULATOR ASSY	*	1					

E N G I N E

E3112UP01···PZ80E16(HD-F TYPE)

6004-097-480-10

FIG. 1 CYLINDER HEAD

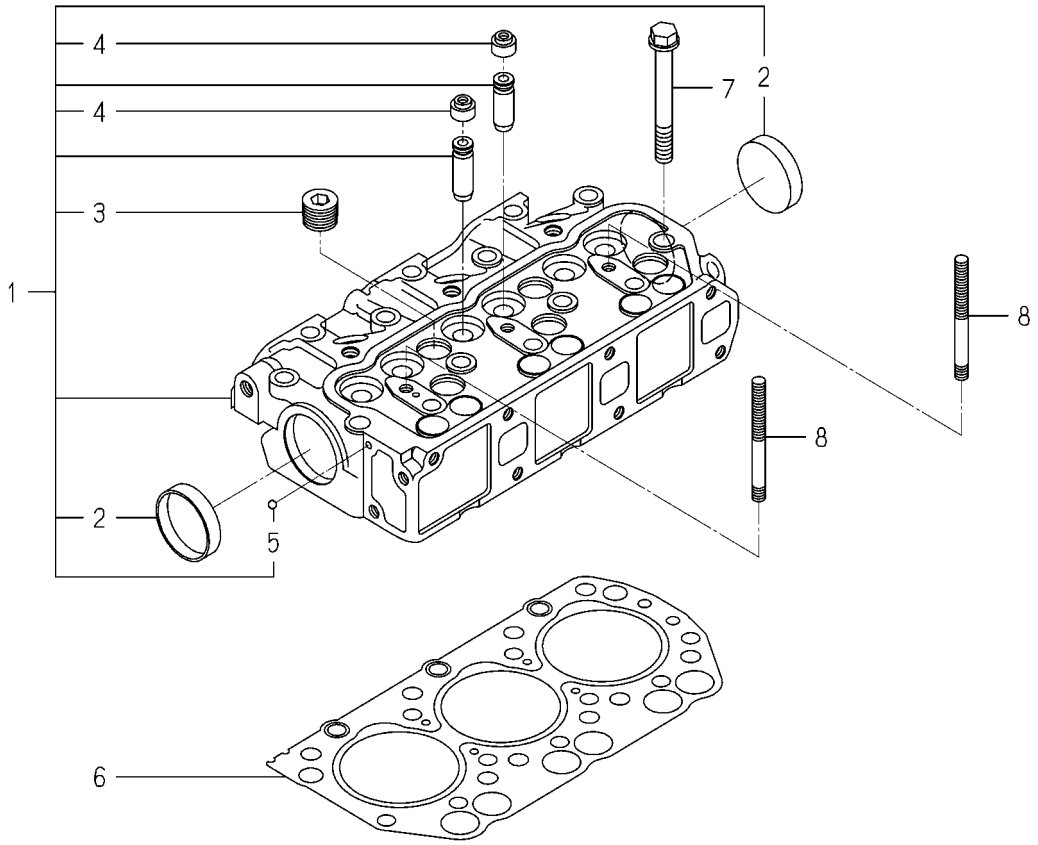

6004-101I-0100,6004-101I-0200

KEY	PART CODE	DESCRIPTION	SPC	TYPE OF MODEL E3112 UP01		ITC	COL	GRP	REMARKS
1	6211-110-057-30	CYLINDERHEAD ASSY	*	1					
2	6911-129-006-00	CAP,SEALING	*	2					
3	6209-605-004-10	PLUG/PT1/2	*	5					
4	6212-569-002-00	SEAL,OIL	*	6					
5	V682-200-000-60	BALL	*	1					
6	6211-141-029-20	GASKET/CYLINDERHEAD	*	1					
7	6209-000-044-00	BOLT	*	14					
8	6209-300-014-00	STUD	*	2					

FIG. 2 CYLINDER HEAD COVER

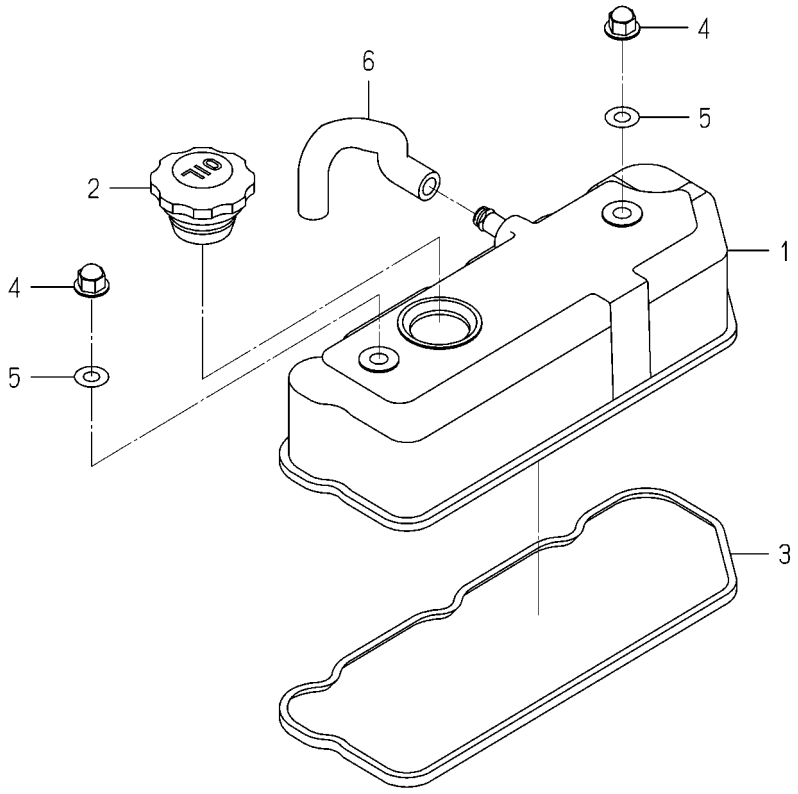

6003-110 -0100

KEY	PART CODE	DESCRIPTION	SPC	TYPE OF MODEL E3112 UP01		ITC	COL	GRP	REMARKS
1	6211-170-004-20	COVER/CYLINDER HEAD	*	1					
2	6211-751-001-10	CAP,OIL FILLER	*	1					
3	6211-173-003-00	SEAL,CYL.HEAD COVER	*	1					
4	6209-490-002-10	NUT/CAP	*	2					
5	6209-572-003-00	GASKET	*	2					
6	6209-360-028-20	HOSE/RUBBER	*	1					

FIG. 3 INLET MANIFOLD

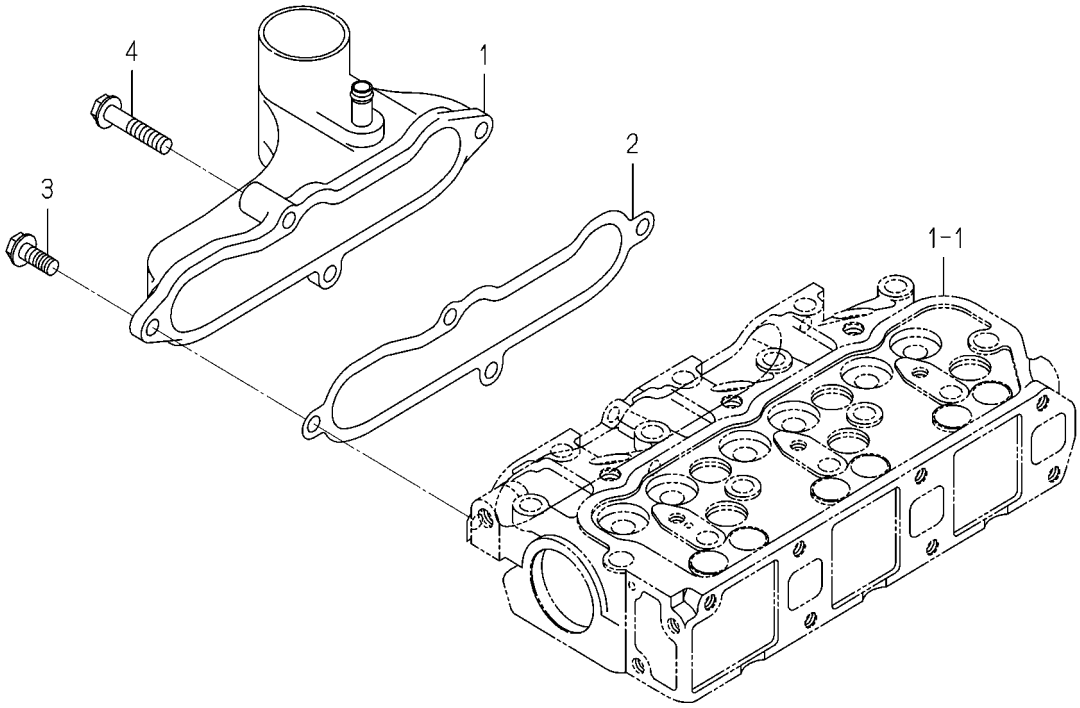

6003-120B-0100

KEY	PART CODE	DESCRIPTION	SPC	TYPE OF MODEL E3112 UP01		ITC	COL	GRP	REMARKS
1	6214-111-011-20	MANIFOLD(INLET) ASSY	*	1					
2	6214-115-001-20	GASKET,INLET MANIFOL	*	1					
3	V231-360-802-00	FLANGEBOLT	*	3					
4	V231-360-804-00	FLANGEBOLT	*	1					

FIG. 4 EXHAUST MANIFOLD

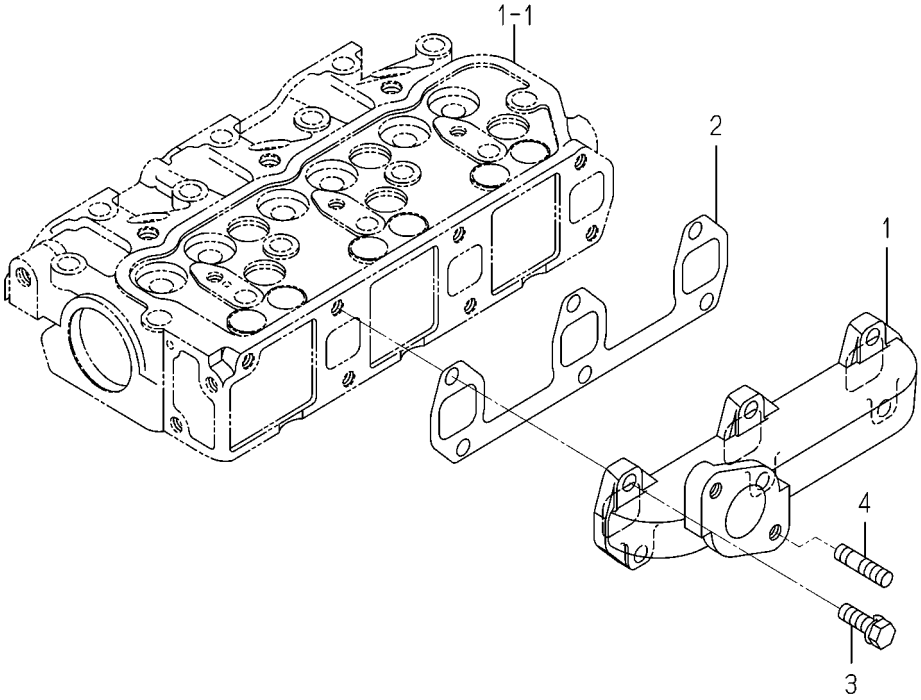

6003-140 -0100

KEY	PART CODE	DESCRIPTION	SPC	TYPE OF MODEL E3112 UP01		ITC	COL	GRP	REMARKS
1	6214-141-008-20	MANIFOLD/EXHAUST	*	1					
2	6214-145-001-30	GASKET,EXH.MANIFOLD	*	1					
3	V211-560-802-50	BOLT,SEMS/M8X25 7T	*	6					
4	6904-110-822-00	STUD	*	2					

FIG. 5 CYLINDER BLOCK

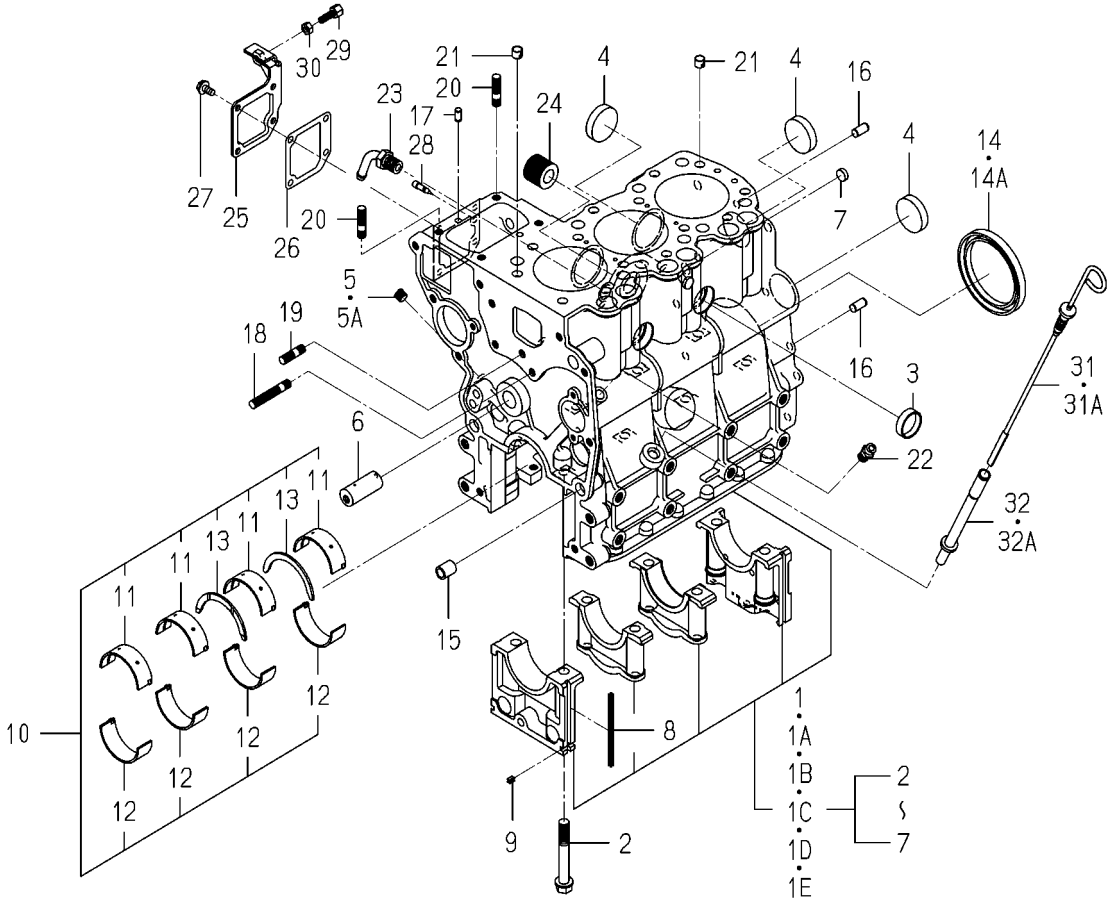

6004-202S-0100

KEY	PART CODE	DESCRIPTION	SPC	TYPE OF MODEL E3112 UP01		ITC	COL	GRP	REMARKS
1	6211-210-037-30	CYLINDERBLOCK ASSY	*	1 -308766					
1A	6211-210-037-40	CYLINDERBLOCK ASSY	*	1 -322218		1			
1B	6211-210-037-50	CYLINDERBLOCK ASSY	*	1 -327508		1			
1C	6211-210-037-60	CYLINDERBLOCK ASSY	*	1 -338708		1			
1D	6211-210-037-70	CYLINDERBLOCK ASSY	*	1 -348177		1			
1E	6211-210-037-80	CYLINDERBLOCK ASSY	*	1 348178-		1			
2	6209-000-004-10	BOLT	*	8					
3	6209-610-001-10	CUP/SEALING/28	*	2					
4	6209-610-009-00	CUP/SEALING/36	*	4					
5	6209-605-007-00	PLUG/PT1/8	*	3 -327377					
5A	6209-605-007-10	PLUG/PT1/8	*	3 327378-		1			
6	6212-531-005-10	PIN/IDLEGEAR	*	1					
7	6209-610-008-00	CUP/SEALING/12	*	2					
8	6211-258-001-00	SEAL,BEARING CAP	*	4					
9	6211-258-002-00	SEAL,BEARING CAP/7	*	2					
10	6211-510-001-00	METAL,CRANK SET	*	1					
11	6211-511-003-00	BEARING/CRANK/UPPER	*	4					
12	6211-511-004-00	BEARING/CRANK/LOWER	*	4					
13	6211-599-001-10	BEARING,THRUST CRANK	*	2					
14	6209-625-012-00	OILSEAL	*	1 -303586					
14A	6209-625-001-00	SEAL,OIL	*	1 303587-					
15	6209-749-001-20	PIN/TUBE	*	2					
16	6213-129-006-00	PIN/STRAIGHT	*	2					
17	6209-740-005-00	PIN	*	2					
18	6904-110-840-00	STUD/M8X40	*	1					
19	6904-110-818-00	STUD	*	1					
20	6904-110-822-00	STUD	*	2					
21	6294-453-002-00	DOWEL	*	2					
22	6909-902-299-00	NIPPLE	*	1					
23	6213-721-001-00	PIPE,WATER DRAIN	*	1					

FIG. 5 CYLINDER BLOCK

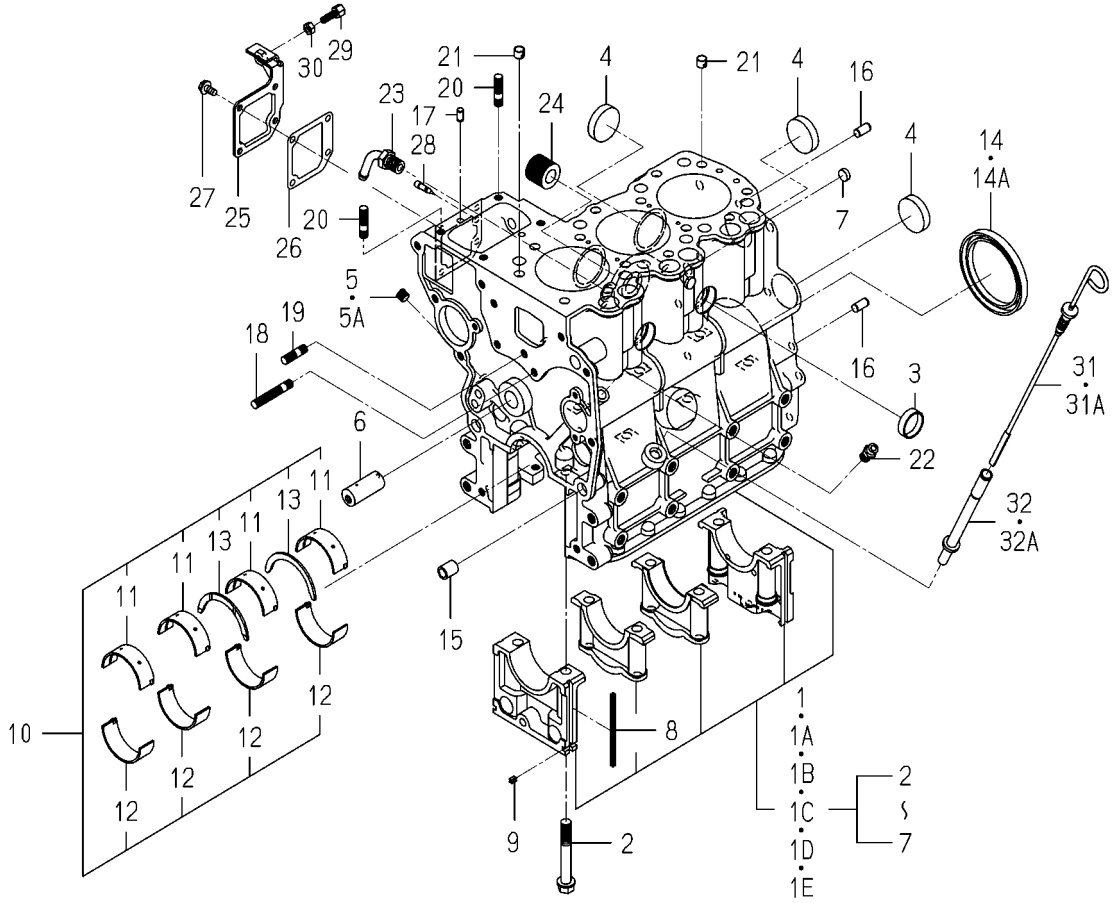

6004-202S-0100

KEY	PART CODE	DESCRIPTION	SPC	TYPE OF MODEL E3112 UP01		ITC	COL	GRP	REMARKS
24	6213-319-001-00	CONNECTOR,OIL FILTER	*	1					
25	6211-291-001-10	COVER,INJ PUMP	*	1					
26	6211-292-001-20	GASKET/COVER	*	1					
27	V230-360-601-20	FLANGEBOLT	*	4					
28	6215-549-013-00	PIN	*	1					
29	6209-788-001-00	BOLT,ADJUST	*	1					
30	V301-260-006-00	NUT/M6	*	1					
31	6211-760-053-00	LEVELGAGE	*	1 -314797					
31A	6211-760-053-10	LEVELGAGE	*	1 314798-		1			
32	6211-766-009-00	GUIDE/LEVELGAGE COMP	*	1 -346545					
32A	6211-766-009-10	GUIDE/LEVELGAGE COMP	*	1 346546-		1			

FIG. 6 BEARING/UNDER SIZE (OPTION)

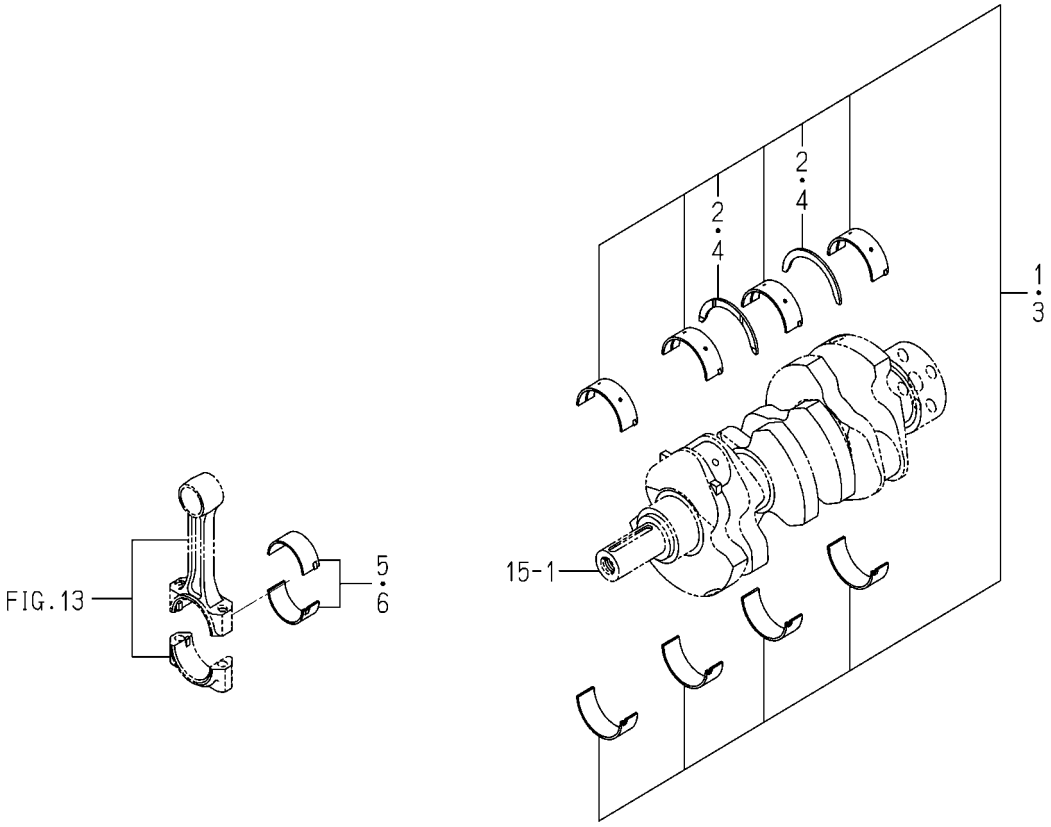

6003-209 -0100

KEY	PART CODE	DESCRIPTION	SPC	TYPE OF MODEL E3112 UP01		ITC	COL	GRP	REMARKS
1	6211-540-001-00	METAL,CRANK SET 050	T	1					
2	6211-599-001-10	BEARING,THRUST CRANK	T	2					
3	6211-560-001-00	METAL,CRANK SET 100	T	1					
4	6211-599-001-10	BEARING,THRUST CRANK	T	2					
5	6212-274-016-00	BEARING/CONNECTING R	T	3					
6	6212-276-016-00	BEARING/CONNECTING R	T	3					

FIG. 7 OIL PAN

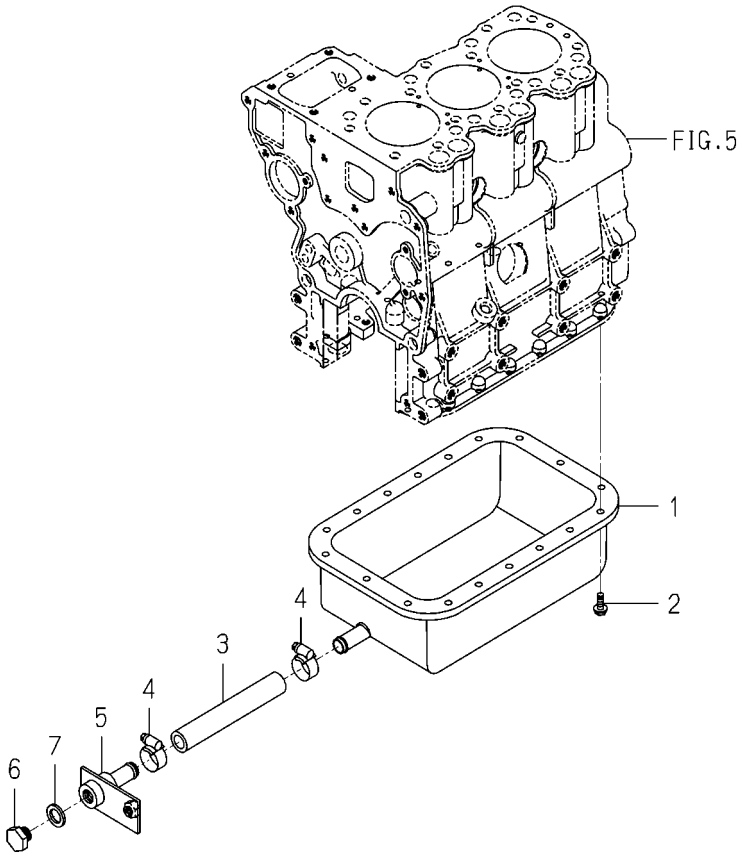

6004-210H-0100

KEY	PART CODE	DESCRIPTION	SPC	TYPE OF MODEL E3112 UP01		ITC	COL	GRP	REMARKS
1	6211-361-008-10	PAN,OIL COMP	*	1					
2	V230-360-601-00	FLANGEBOLT	*	18					
3	6209-360-094-00	HOSE/RUBBER/140	*	1					
4	J061-114-024-00	CLAMP/WORM/14-24	*	2					
5	3659-301-260-10	NIPPLE COMP	*	1					
6	6209-600-003-00	PLUG/SCREW/M14X1.5	*	1					
7	6209-500-004-00	WASHER/14X23X1.5	*	1					

FIG. 8 REAR PLATE

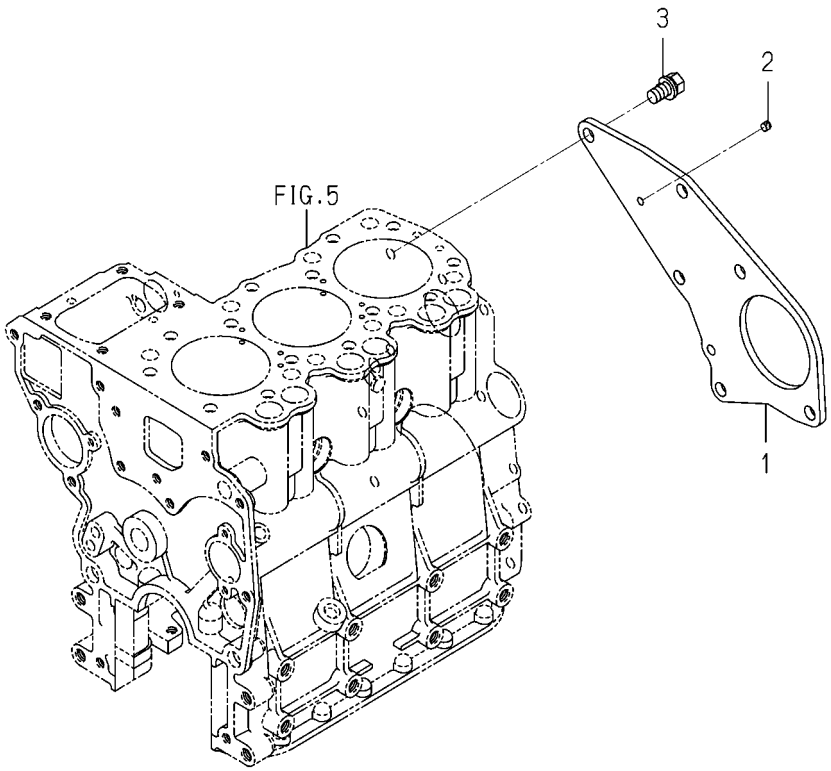

6004-220P-0100

KEY	PART CODE	DESCRIPTION	SPC	TYPE OF MODEL E3112 UP01		ITC	COL	GRP	REMARKS
1	6211-341-081-00	PLATE/REAR	*	1					
2	6211-342-001-30	POINTER	*	1					
3	6901-911-020-00	BOLT,SEMS/M10X20	*	4					

FIG. 9 TIMING GEAR CASE

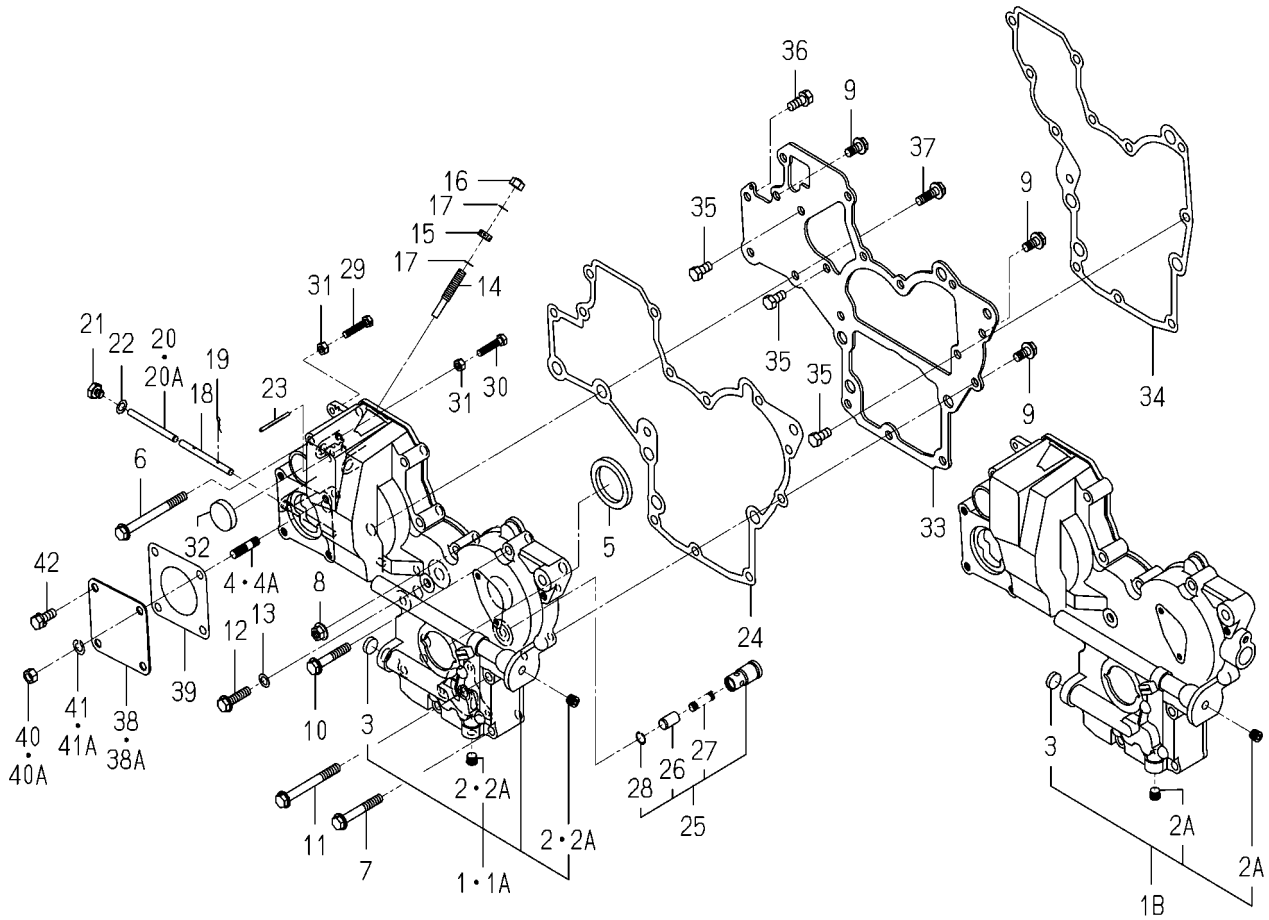

6004-240X-0100,6004-240X-0200

KEY	PART CODE	DESCRIPTION	SPC	TYPE OF MODEL E3112 UP01		ITC	COL	GRP	REMARKS
1	6211-310-025-30	GEARCASE ASSY	*	1 -303101					
1A	6211-310-025-40	GEARCASE ASSY	*	1 -329529		1			
1B	6211-310-025-50	GEARCASE ASSY	*	1 329530-		1			
2	6209-605-007-00	PLUG/PT1/8	*	2 -327377					
2A	6209-605-007-10	PLUG/PT1/8	*	2 327378-		1			
3	6209-610-007-00	CUP/SEALING/16	*	1					
4	6904-110-814-00	STUD	*	4 -326963					
4A	6904-110-822-00	STUD	*	1 326964-					
5	6209-625-002-00	SEAL,OIL	*	1					
6	V231-360-808-50	FLANGEBOLT	*	1					
7	V231-360-805-50	FLANGEBOLT	*	2					
8	3817-401-001-00	NUT/M08	*	1					
9	V231-360-801-60	FLANGEBOLT	*	3					
10	V231-360-804-50	FLANGEBOLT	*	5					
11	V231-360-807-50	FLANGEBOLT	*	1					
12	V231-360-803-00	FLANGEBOLT	*	1					
13	6209-500-003-00	WASHER/08X14X01	*	1					
14	6215-546-003-10	STOPPER/FULLLOAD	*	1					
15	6209-409-001-00	NUT/M8	*	1					
16	V341-120-008-00	NUT,CAP/M 8	*	1					
17	6209-920-002-00	PACKING	*	2					
18	6215-542-004-20	PIN/ARM	*	1					
19	P117-303-003-00	PIN/SNAP	*	2					
20	6215-542-005-10	PIN	*	1 -335019					
20A	6215-542-005-20	PIN	*	1 335020-		1			
21	6209-600-004-00	PLUG/SCREW	*	1					
22	6209-500-003-00	WASHER/08X14X01	*	1					
23	6209-740-001-00	PIN,GROOVE	*	1					
24	6211-312-003-20	GASKET/GEARCASE	*	1					
25	6213-160-002-20	VALVE/RELIEF ASSY	*	1					

FIG. 9 TIMING GEAR CASE

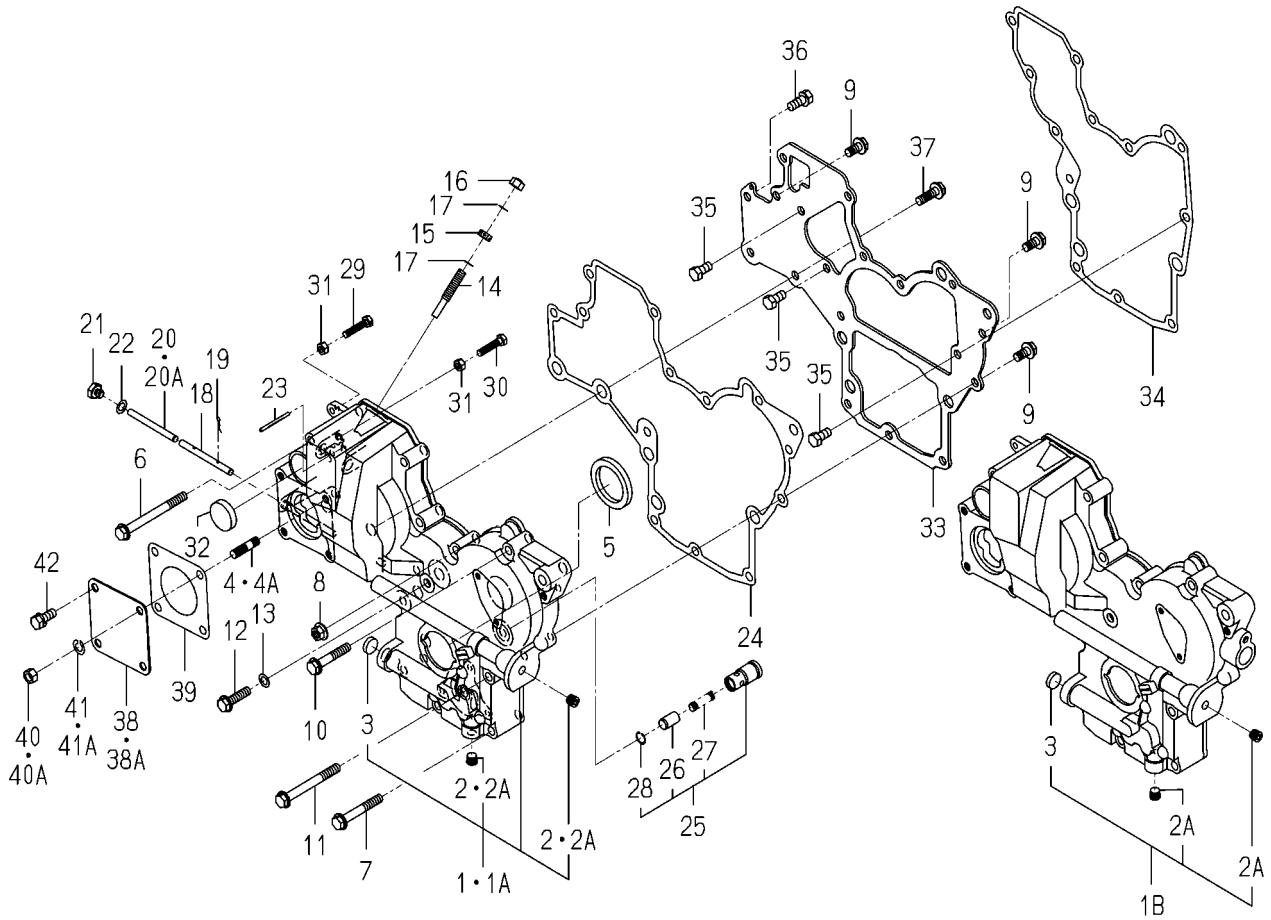

6004-240X-0100,6004-240X-0200

KEY	PART CODE	DESCRIPTION	SPC	TYPE OF MODEL E3112 UP01		ITC	COL	GRP	REMARKS
26	6213-161-001-20	PISTON/VALVE/RELIEF	*	1					
27	6213-164-001-00	SPRING/RELIEF VALVE	*	1					
28	V705-140-012-00	RING,SNAP/12 C	*	1					
29	6209-050-001-00	BOLT/M6	*	1					
30	6209-050-002-00	BOLT/M6	*	1					
31	V301-260-006-00	NUT/M6	*	2					
32	3625-540-004-00	CAP,BLANK/30	*	1					
33	6211-311-048-10	PLATE/FRONT	*	1					
34	6211-312-004-20	GASKET/PLATE	*	1					
35	6902-050-816-00	BOLT	*	3					
36	V211-560-802-00	BOLT/M8X20	*	1					
37	V231-360-802-50	FLANGEBOLT	*	2					
38	6511-321-083-00	COVER	*	1 -309387					
38A	6211-321-022-00	COVER/HYDRAULIC	*	1 309388-					
39	6211-322-002-00	GASKET/COVER	*	1					
40	V304-260-008-00	NUT	*	4 -326963					
40A	V304-260-008-00	NUT	*	1 326964-					
41	V401-160-008-00	WASHER,SP/M 8	*	4 -326963					
41A	V401-160-008-00	WASHER,SP/M 8	*	1 326964-					
42	V211-560-802-00	BOLT/M8X20	*	3 326964-					

FIG. 10 HANGER

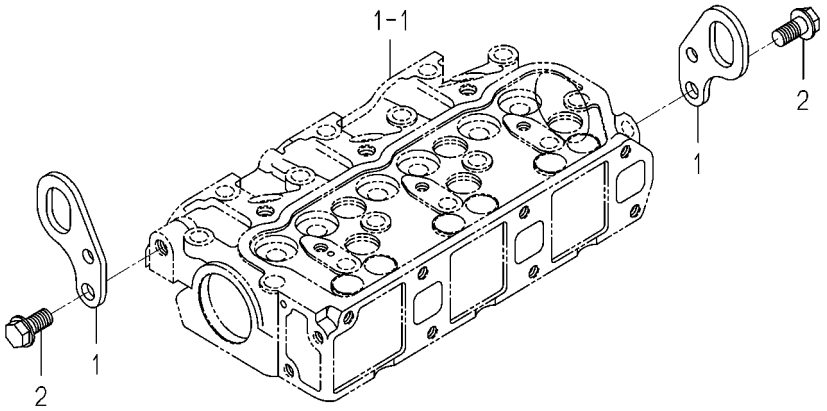

6003-290 -0100

KEY	PART CODE	DESCRIPTION	SPC	TYPE OF MODEL E3112 UP01		ITC	COL	GRP	REMARKS
1	6211-777-007-30	HANGER	*	2					
2	V233-361-002-00	FLANGEBOLT	*	2					

FIG. 11 VALVE

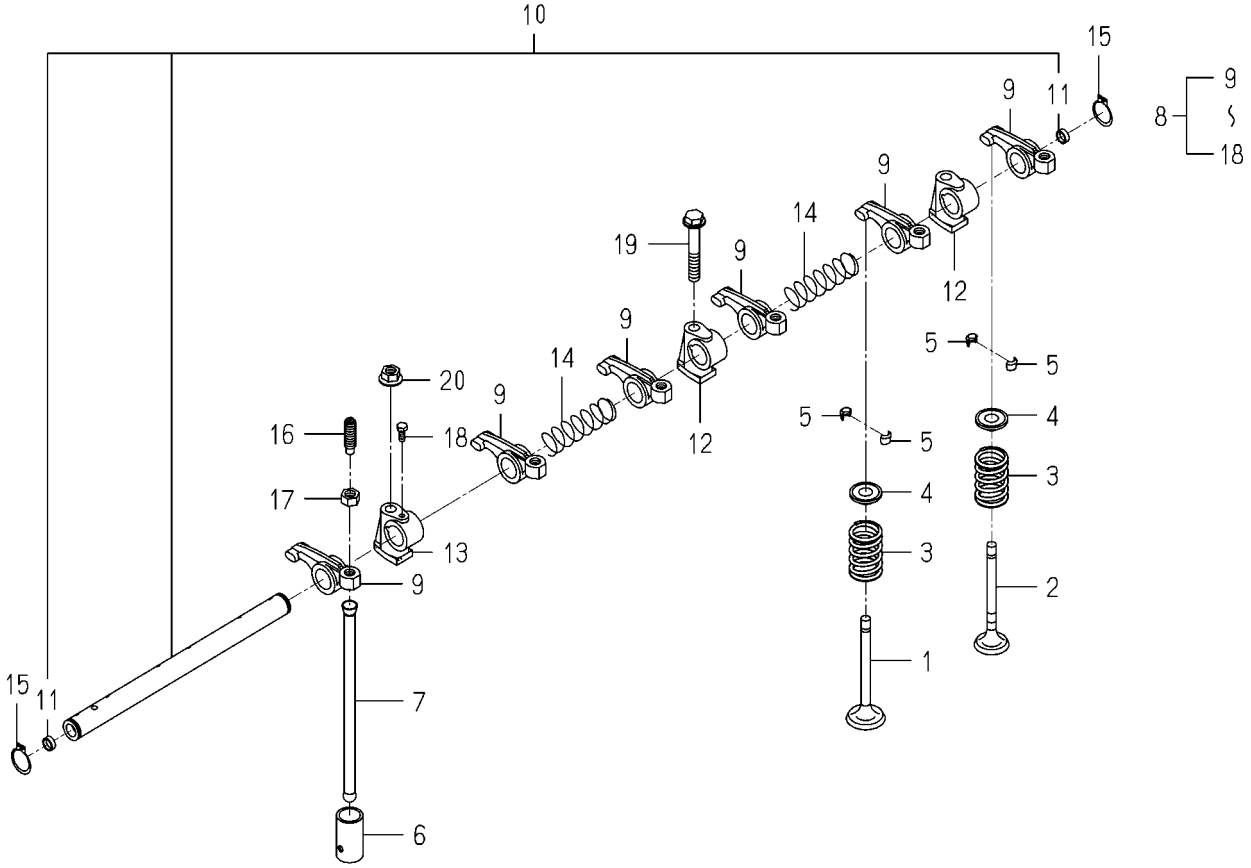

6004-301 -0100

KEY	PART CODE	DESCRIPTION	SPC	TYPE OF MODEL E3112 UP01		ITC	COL	GRP	REMARKS
1	6212-551-028-00	VALVE/INTAKE	*	3					
2	6212-552-014-00	VALVE/EXHAUST	*	3					
3	6212-561-001-10	SPRING/VALVE	*	6					
4	6212-563-001-00	SEAT,VALVE SPRING	*	6					
5	6212-565-001-00	CUTTER,VALVE	*	12					
6	6212-571-006-00	TAPPET	*	6					
7	6212-575-002-00	ROD,PUSH	*	6					
8	6212-600-002-10	ROCKERSHAFT ASSY	*	1					
9	6212-611-004-10	ROCKERARM	*	6					
10	6212-620-001-20	SHAFT/ROCKERARM ASSY	*	1					
11	6212-626-002-10	PLUG	*	2					
12	6212-628-004-00	BRACKET ROCKER SHAFT	*	2					
13	6212-628-005-00	BRACKET,ROCKER SHAFT	*	1					
14	6209-940-004-00	SPRING	*	2					
15	V704-140-016-00	RING,SNAP/16 C	*	2					
16	6212-616-002-00	SCREW ADJUST	*	6					
17	6209-409-003-00	NUT	*	6					
18	6209-000-002-00	BOLT	*	1					
19	V231-360-805-00	FLANGEBOLT	*	1					
20	3817-401-001-00	NUT/M08	*	2					

FIG. 12 CAM SHAFT

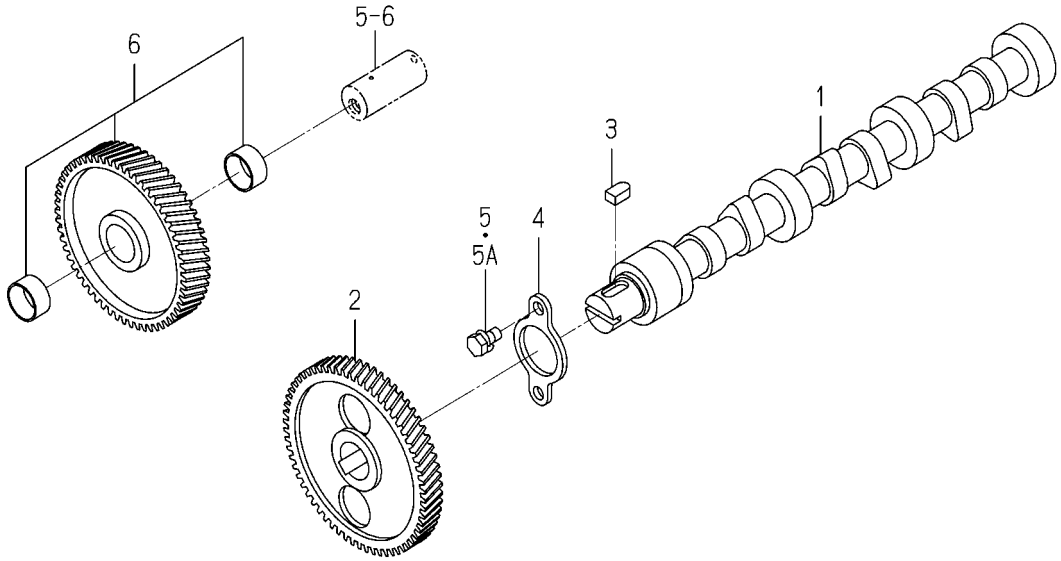

6003-310 -0100

KEY	PART CODE	DESCRIPTION	SPC	TYPE OF MODEL E3112 UP01		ITC	COL	GRP	REMARKS
1	6212-511-002-00	SHAFT,CAM	*	1					
2	6212-522-010-00	GEAR/CAMSHAFT	*	1					
3	6209-730-005-00	KEY/07X05X09	*	1					
4	6212-535-001-00	PLATE,THRUST	*	1					
5	6901-910-612-00	BOLT,SEMS/M6X12	*	2 -336180					
5A	V210-560-601-20	BOLT/S	*	2 336181-					
6	6212-523-023-00	GEAR/IDLE ASSY	*	1					

FIG. 13 PISTON

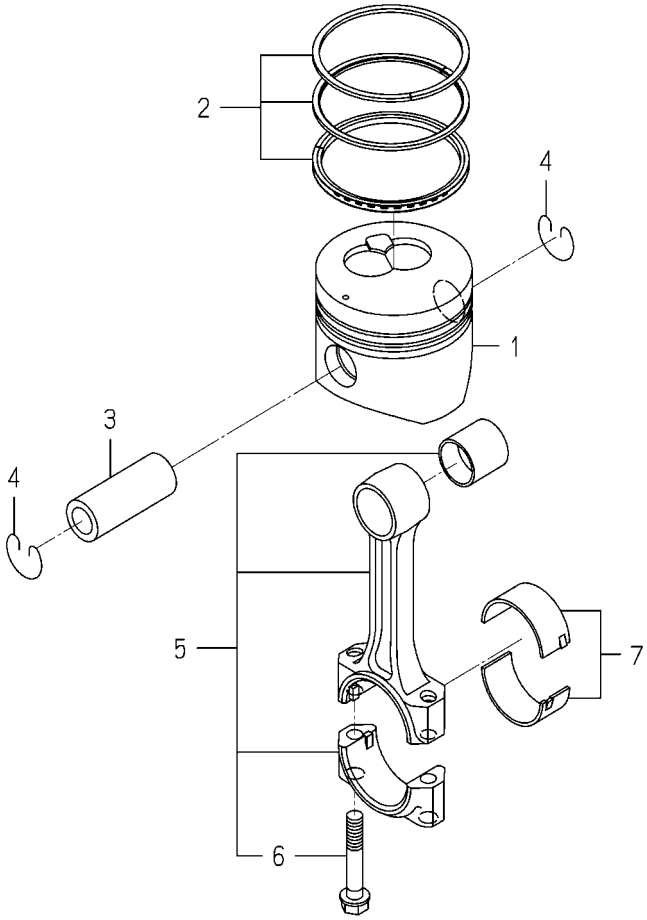

6004-340I-0100

KEY	PART CODE	DESCRIPTION	SPC	TYPE OF MODEL E3112 UP01		ITC	COL	GRP	REMARKS
1	6212-111-094-20	PISTON	*	3					
2	6212-121-014-20	RING/PISTON SET	*	3					
3	6212-211-001-10	PIN,PISTON	*	3					
4	6209-587-001-00	RING,SNAP	*	6					
5	6212-230-004-10	CONNECTINGROD ASSY	*	3					
6	6212-235-005-00	BOLT/CONNECTINGROD	*	6					
7	6212-271-016-00	BEARING/CONNECTING R	*	3					

FIG. 14 PISTON/OVER SIZE (OPTION)

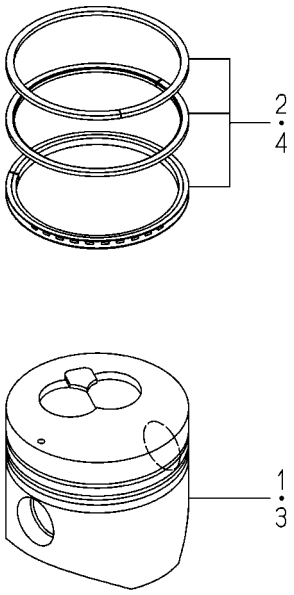

6004-349I-0100

KEY	PART CODE	DESCRIPTION	SPC	TYPE OF MODEL E3112 UP01		ITC	COL	GRP	REMARKS
1	6212-114-094-20	PISTON(OV) 78.7	T	3					
2	6212-124-014-10	RING/PISTON/OV SET	T	3					
3	6212-116-094-20	PISTON(OV) 79.2	T	3					
4	6212-126-014-10	RING/PISTON/OV SET	T	3					

FIG. 15 CRANK SHAFT

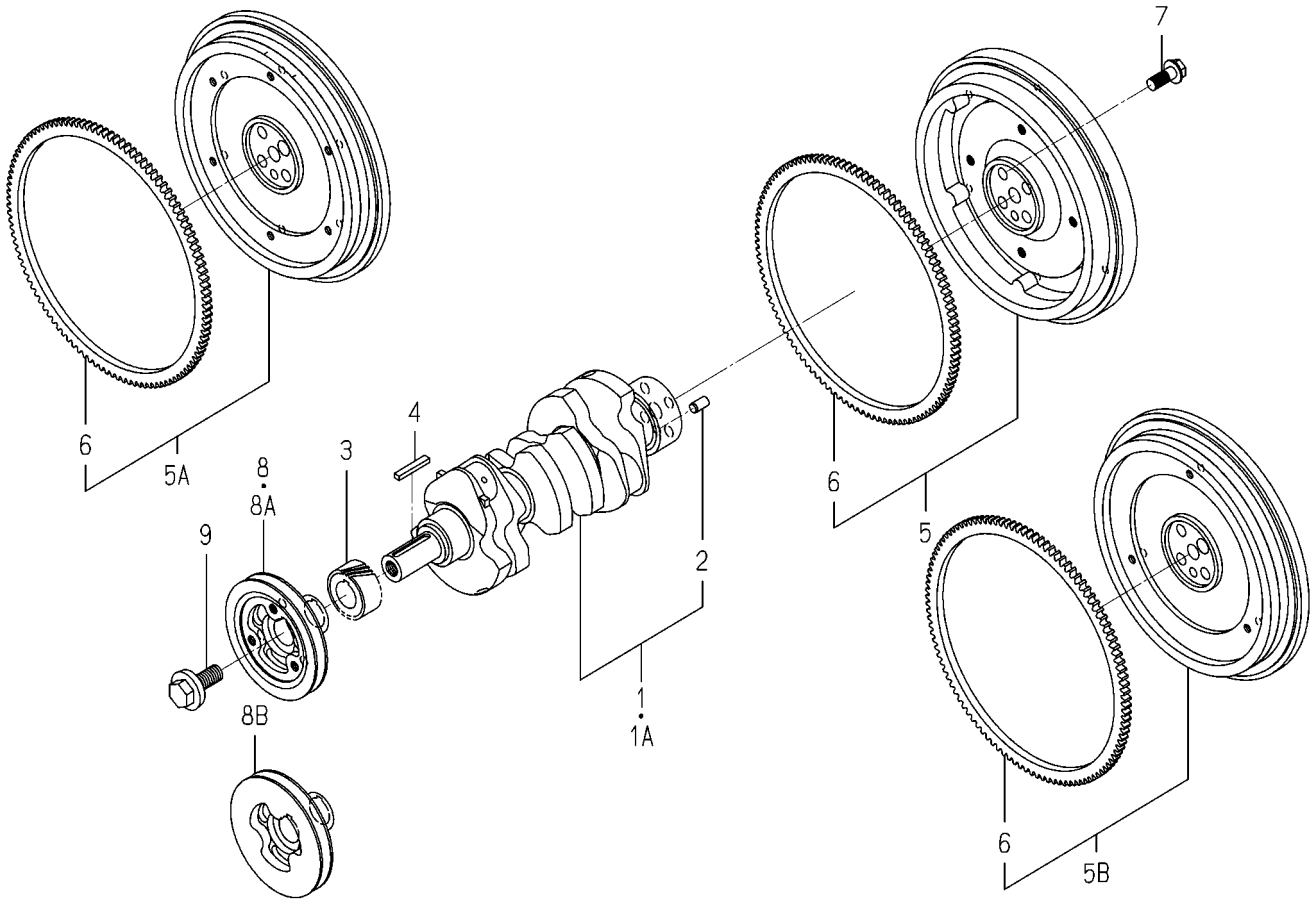

6004-351 -0100

KEY	PART CODE	DESCRIPTION	SPC	TYPE OF MODEL E3112 UP01		ITC	COL	GRP	REMARKS
1	6212-310-009-40	CRANKSHAFT ASSY	*	1 -341095					
1A	6212-310-009-50	CRANKSHAFT ASSY	*	1 341096-		1			
2	V523-101-001-80	PIN	*	1					
3	6212-521-008-00	GEAR/CRANK	*	1					
4	6209-730-006-00	KEY/07X05X43	*	1					
5	6212-330-013-30	FLYWHEEL	*	1 -301041					
5A	6212-330-095-00	FLYWHEEL ASSY	*	1 -359417					
5B	6212-330-095-10	FLYWHEEL ASSY	*	1 359418-		1			
6	6212-333-003-00	RINGGEAR	*	1					
7	6209-046-015-00	BOLT/FLANGE	*	4					
8	6212-371-035-10	PULLEY/CRANK	*	1 -322990					
8A	6212-371-035-20	PULLEY/CRANK	*	1 -360532		1			
8B	6212-371-073-00	PULLEY/CRANK	*	1 360533-					
9	6209-000-043-00	BOLT/CRANK	*	1					

FIG. 16 OIL PUMP

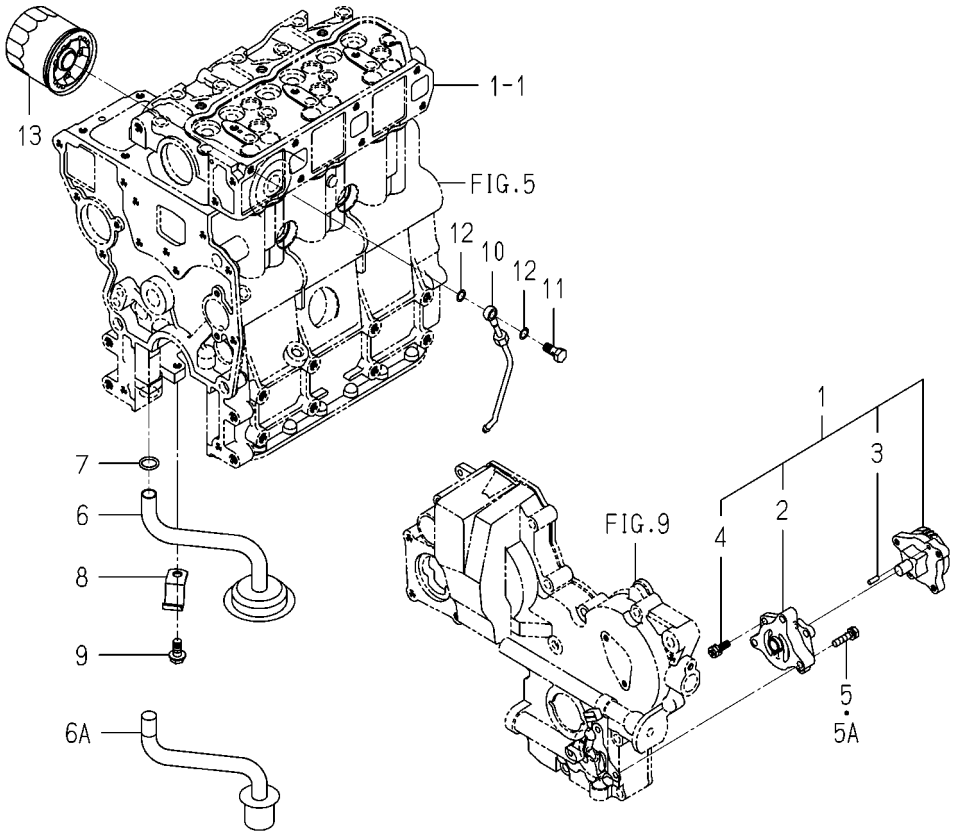

6004-401A-0100

KEY	PART CODE	DESCRIPTION	SPC	TYPE OF MODEL E3112 UP01		ITC	COL	GRP	REMARKS
1	6213-100-003-30	OILPUMP ASSY	*	1					
2	6213-111-001-30	BODY/OILPUMP	*	1					
3	6213-129-003-00	PIN/STRAIGHT	*	2					
4	6213-119-001-00	BOLT/WS	*	3					
5	6901-910-625-00	BOLT	*	3 -343508					
5A	V210-560-602-50	BOLT/S	*	3 343509-					
6	6213-140-002-10	STRAINER COMP	*	1 -306520					
6A	6213-140-032-00	STRAINER	*	1 306521-					
7	V720-102-401-50	O-RING/P15	*	1					
8	6213-149-001-00	CLAMP,STRAINER	*	1					
9	V231-360-801-60	FLANGEBOLT	*	1					
10	6213-311-006-00	PIPE,OIL	*	1					
11	6909-906-105-10	BOLT,JOINT	*	1					
12	6209-920-002-00	PACKING	*	2					
13	6213-240-002-10	CARTRIDGE/OILFILTER	*	1					

FIG. 17 WATER PUMP

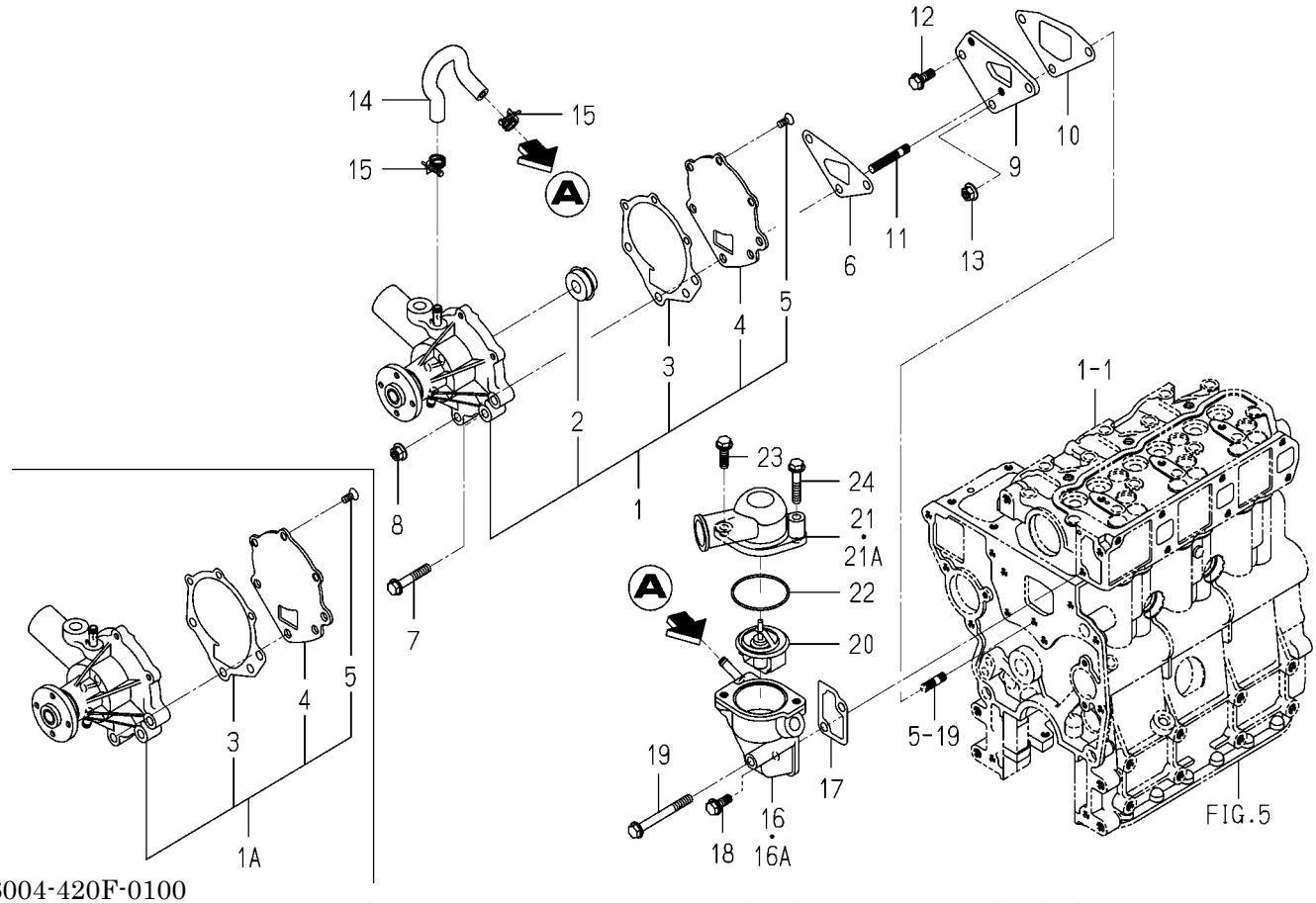

6004-420F-0100

KEY	PART CODE	DESCRIPTION	SPC	TYPE OF MODEL E3112 UP01		ITC	COL	GRP	REMARKS
1	6213-610-005-40	WATERPUMP ASSY	*	1 -337627					
1A	6213-610-005-50	WATERPUMP ASSY	*	1 337628-		1			
2	6213-622-002-10	SEAL SET/WATER PUMP	*	1 -337627					
3	6213-613-002-10	GASKET	*	1					
4	6213-612-004-00	PLATE/WATER PUMP	*	1					
5	6213-619-003-00	SCREW/WATER PUMP	*	3					
6	6213-614-003-10	GASKET/WATER PUMP	*	1					
7	V231-360-804-50	FLANGEBOLT	*	1					
8	3817-401-001-00	NUT/M08	*	2					
9	6213-619-001-00	SPACER,PUMP.WATER	*	1					
10	6213-614-004-10	GASKET,SPACER	*	1					
11	6904-110-840-00	STUD/M8X40	*	2					
12	V231-360-802-00	FLANGEBOLT	*	1					
13	3817-401-001-00	NUT/M08	*	1					
14	6213-729-013-10	HOSE/RUBBER	*	1					
15	J061-210-015-00	CLAMP/WIRE/10-15	*	2					
16	6213-716-001-50	HOUSING/THERMOSTAT	*	1 -334634					
16A	6213-716-001-60	HOUSING/THERMOSTAT	*	1 334635-		1			
17	6213-743-002-10	GASKET/HOUSING	*	1					
18	V231-360-802-00	FLANGEBOLT	*	1					
19	V231-360-807-50	FLANGEBOLT	*	1					
20	6513-770-022-10	THERMOSTAT	*	1					
21	6213-711-015-00	PIPE/WATEROUTRET	*	1 -343967					
21A	6213-711-018-00	PIPE/WATEROUTLET	*	1 343968-					
22	V723-102-005-50	O-RING	*	1					
23	V231-360-802-50	FLANGEBOLT	*	1					
24	V231-360-804-00	FLANGEBOLT	*	1					

FIG. 18 COOLING FAN

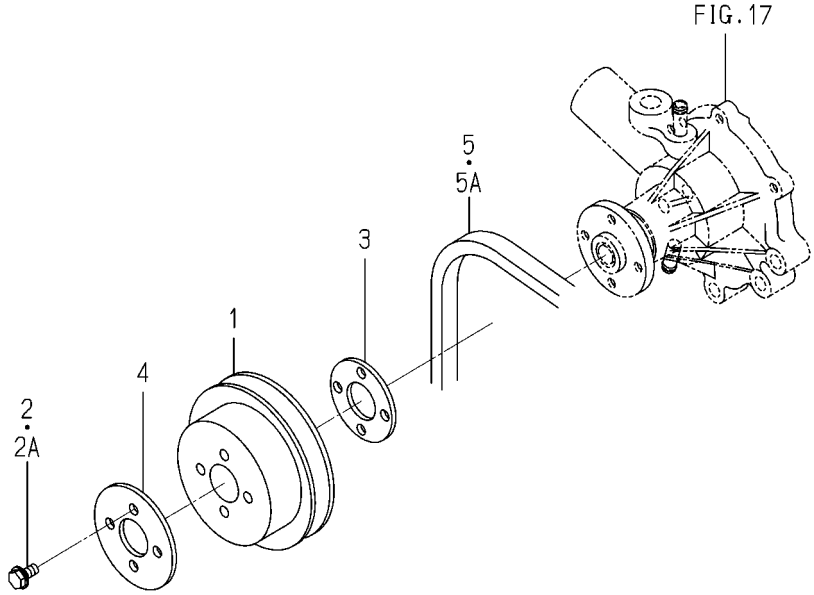

6004-480Y-0100

KEY	PART CODE	DESCRIPTION	SPC	TYPE OF MODEL E3112 UP01		ITC	COL	GRP	REMARKS
1	6213-641-022-10	PULLEY/WATERPUMP	*	1					
2	V230-360-601-20	FLANGEBOLT	*	4 -332734					
2A	V230-360-601-60	FLANGEBOLT	*	4 332735-					
3	6213-669-021-00	SPACER/FAN	*	1					
4	6213-669-022-00	SPACER/FAN	*	1 334924-					
5	6213-671-052-00	BELT/VCOGA36.0	*	1 -321680					
5A	6213-671-053-00	BELT/VNR5A36.0	*	1 321681-					

FIG. 19 INJECTION NOZZLE

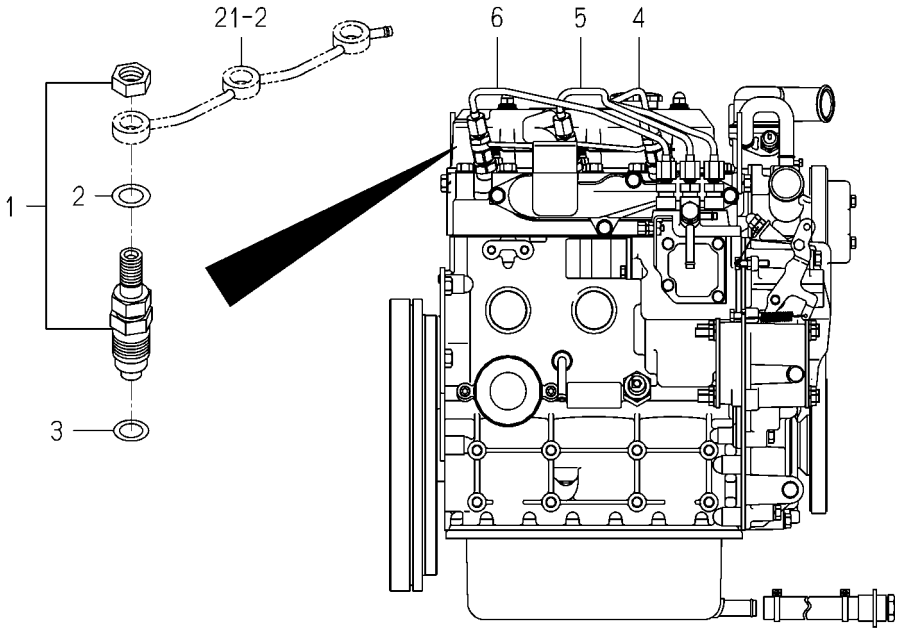

6004-501C-0100

KEY	PART CODE	DESCRIPTION	SPC	TYPE OF MODEL E3112 UP01		ITC	COL	GRP	REMARKS
1	6215-300-036-10	INJECTIONNOZZLE ASSY	*	3					FIG 026
2	6215-359-001-00	WASHER	*	3					
3	6215-315-002-00	GASKET,NOZZLE	*	3					
4	6215-411-126-10	PIPE/INJECTION ASSY	*	1					
5	6215-411-127-00	PIPE/INJECTION ASSY	*	1					
6	6215-411-128-00	PIPE/INJECTION ASSY	*	1					

FIG. 20 INJECTION PUMP

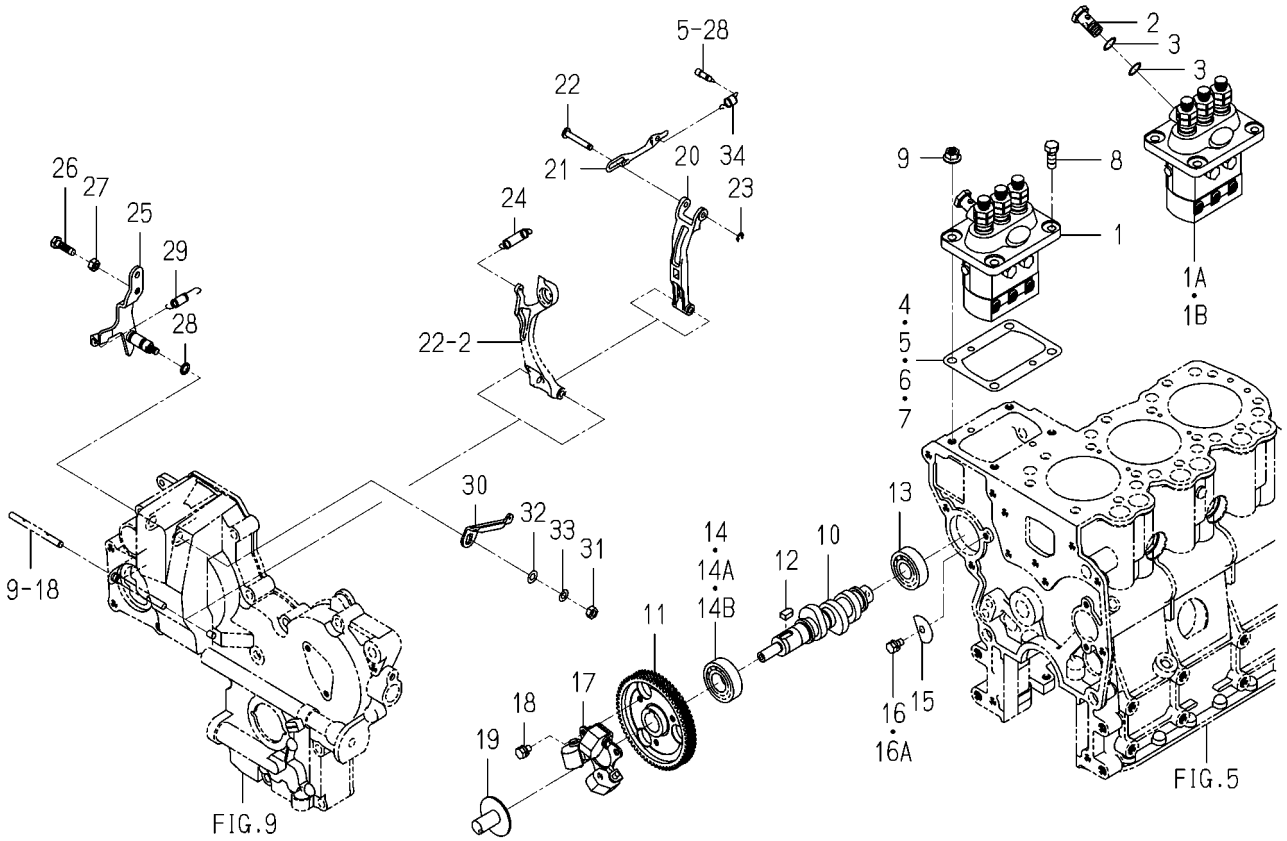

6004-510O-0100

KEY	PART CODE	DESCRIPTION	SPC	TYPE OF MODEL E3112 UP01		ITC	COL	GRP	REMARKS
1	6215-600-103-10	INJECTIONPUMP ASSY	*	1 -321421					FIG 027
1A	6215-600-103-20	INJECTIONPUMP ASSY	*	1 -323188		3			FIG 027
1B	6215-600-103-30	INJECTIONPUMP ASSY	*	1 323189-		1			FIG 027
2	6215-619-010-00	WASHER/AIR BLEEDER	*	2 321422-					
3	6215-619-009-00	SCREW/HOLLOW	*	1 321422-					
4	6219-752-045-00	SHIM/INJECTIONPUMP	*	1					
5	6219-752-044-00	SHIM/INJECTIONPUMP	*	1					
6	6219-752-046-00	SHIM/INJECTIONPUMP	*	1					
7	6219-752-047-00	SHIM/INJECTIONPUMP	*	1					
8	V201-360-802-00	BOLT/M8X20	*	2					
9	3817-401-001-00	NUT/M08	*	2					
10	6215-621-016-20	CAMSHAFT/INJECTION P	*	1					
11	6212-524-002-30	GEAR/INJECTIONPUMP	*	1					
12	6209-730-005-00	KEY/07X05X09	*	1					
13	V600-110-620-30	BEARING,RB/6203	*	1					
14	V600-110-600-40	BEARING,RB/6004	*	1 -325776					
14A	V600-410-600-40	BEARING/BALL	*	1 -328006					
14B	1729-202-001-00	BEARING/BALL	*	1 328007-					
15	6212-535-002-00	PLATE,THRUST INJPUMP	*	1					
16	6901-910-612-00	BOLT,SEMS/M6X12	*	1 -336180					
16A	V210-560-601-20	BOLT/S	*	1 336181-					
17	6215-520-001-00	FLYWEIGHT	*	1					
18	6209-030-043-00	BOLT/M6X10	*	3					
19	6215-526-004-00	THRUSTPIECE	*	1					
20	6215-541-001-10	ARM/FLOATING COMP	*	1					
21	6215-543-002-10	RINK/CONTROL	*	1					
22	6215-542-006-00	PIN,CONTROL	*	1					
23	V710-140-004-00	RING,SNAP/ 4 E	*	1					
24	6215-531-008-00	SPRING/GOVERNOR	*	1					
25	6215-541-012-20	LEVER(CONTROL) COMP	*	1					

FIG. 20 INJECTION PUMP

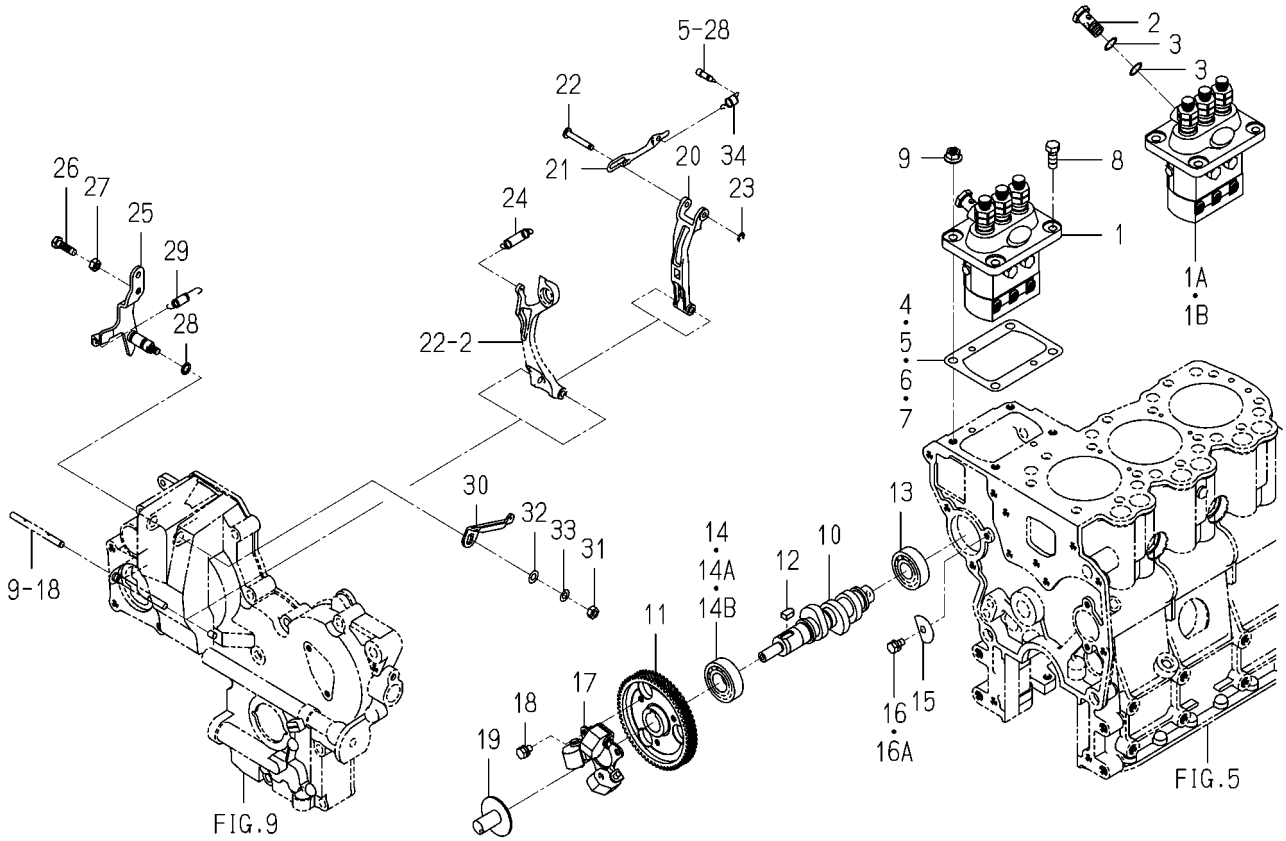

6004-510O-0100

KEY	PART CODE	DESCRIPTION	SPC	TYPE OF MODEL E3112 UP01		ITC	COL	GRP	REMARKS
26	6209-044-001-00	BOLT/M6X18	*	1					
27	V302-260-006-00	NUT/M 6	*	2					
28	V720-101-900-80	O-RING/P 8	*	1					
29	6209-580-002-10	SPRING,RETURN	*	1					
30	6215-549-007-10	ARM/CONTROL	*	1					
31	V301-260-006-00	NUT/M6	*	1					
32	V411-260-006-00	WASHER / M6	*	1					
33	V401-160-006-00	WASHER,SP/M 6	*	1					
34	6215-549-012-00	SPRING,STARTING	*	1					

FIG. 21 FUEL PIPE

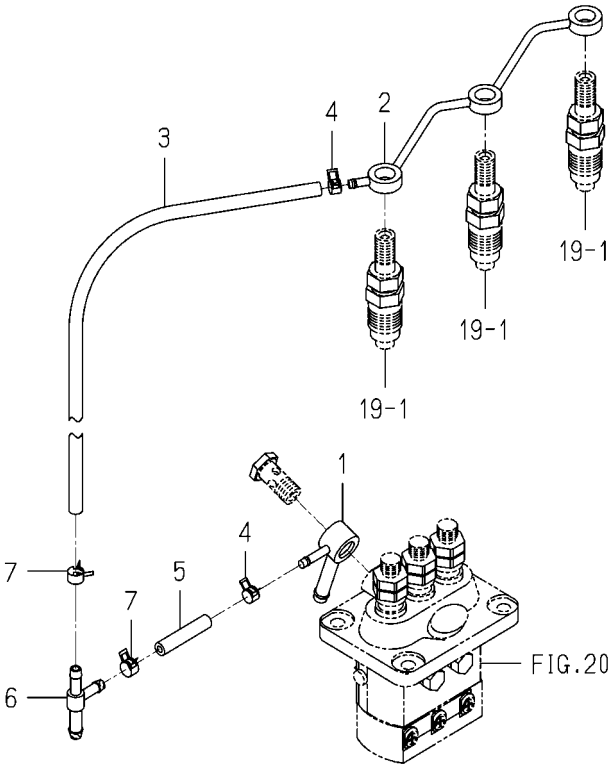

6004-550K-0100

KEY	PART CODE	DESCRIPTION	SPC	TYPE OF MODEL E3112 UP01		ITC	COL	GRP	REMARKS
1	6215-412-004-00	CONNECTOR/FUEL	*	1					
2	6215-411-125-00	PIPE/FUEL	*	1					
3	6209-360-018-00	HOSE/RUBBER/160	*	1					
4	J062-076-082-00	CLIP/HOSE/7.6-8.2	*	2					
5	6209-360-006-00	HOSE,RUBBER	*	1					
6	3643-586-001-00	JOINTT-TYPE	*	1					
7	J062-087-093-00	CLIP/HOSE/8.7-9.3	*	2					

FIG. 22 ADAPTER

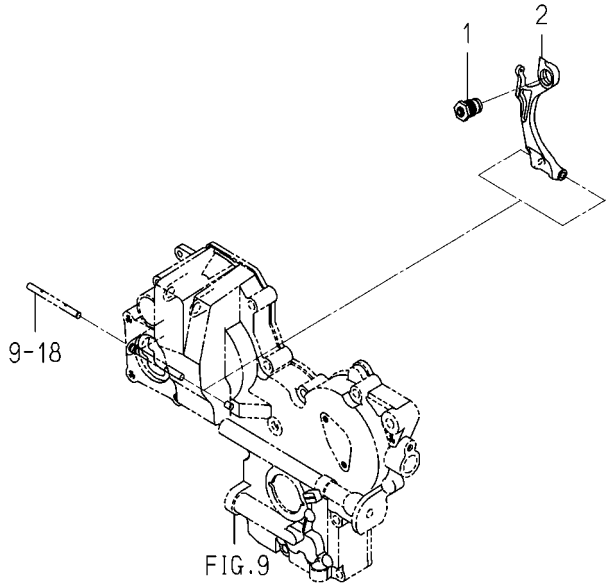

6005-560 -0100

KEY	PART CODE	DESCRIPTION	SPC	TYPE OF MODEL E3112 UP01		ITC	COL	GRP	REMARKS
1	6215-548-029-00	ADAPTER/255X065 ASSY	*	1					
2	6215-541-016-40	ARM/TENSION	*	1					

FIG. 23 ELECTRIC (1)

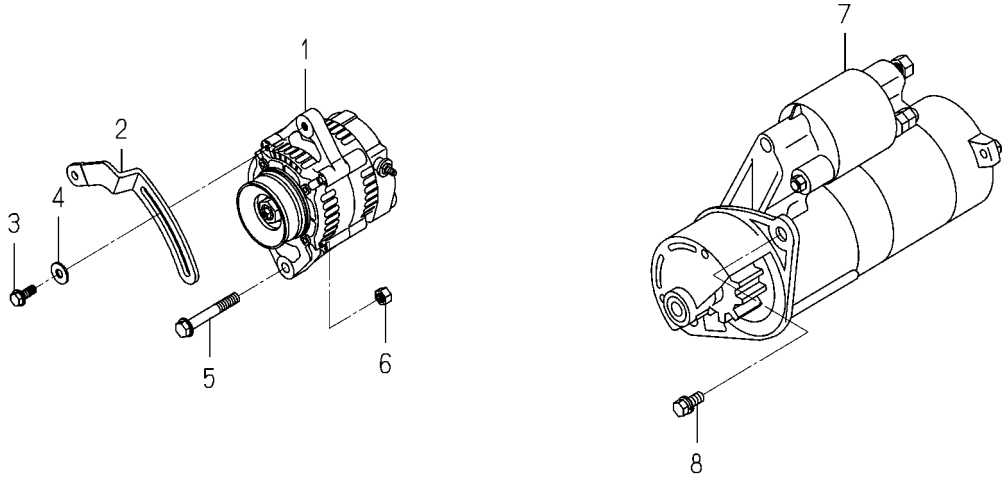

6004-801M-0100,6004-801M-0200

KEY	PART CODE	DESCRIPTION	SPC	TYPE OF MODEL E3112 UP01		ITC	COL	GRP	REMARKS
1	2182-104-520-00	GENERATOR ASSY	*	1					
2	6213-674-012-20	PLATE/ADJUST	*	1					
3	V231-360-802-00	FLANGEBOLT	*	1					
4	1373-121-001-00	WASHER/9X22X2	*	1					
5	V233-361-007-00	FLANGEBOLT	*	1					
6	V334-260-010-00	NUT/M10	*	1					
7	6281-100-014-00	STARTER ASSY	*	1					FIG 028
8	6901-911-025-00	BOLT	*	2					

FIG. 24 ELECTRIC (2)

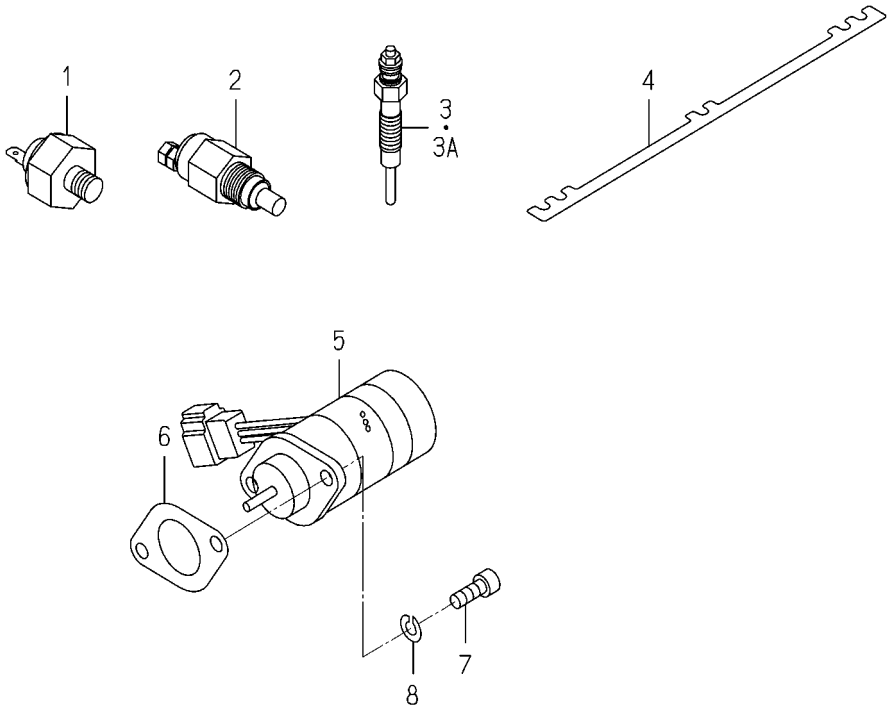

6004-820S-0100,6004-820S-0200

KEY	PART CODE	DESCRIPTION	SPC	TYPE OF MODEL E3112 UP01		ITC	COL	GRP	REMARKS
1	6281-971-001-10	SWITCH/OILPRESSURE	*	1					
2	6282-450-008-00	SWITCH/OVERHEAT	*	1					
3	6281-410-024-00	GLOWPLUG	*	3 -362971					
3A	6281-410-026-00	GLOWPLUG	*	3 362972-					
4	6219-732-017-00	CONNECTOR/GLOWPLUG	*	1					
5	6281-910-011-00	SOLENOID	*	1					
6	6209-630-002-10	GASKET	*	1					
7	V220-540-601-60	BOLT	*	2					
8	V401-160-006-00	WASHER,SP/M 6	*	2 360046-					

FIG. 25 REPAIR PARTS(OPTION)

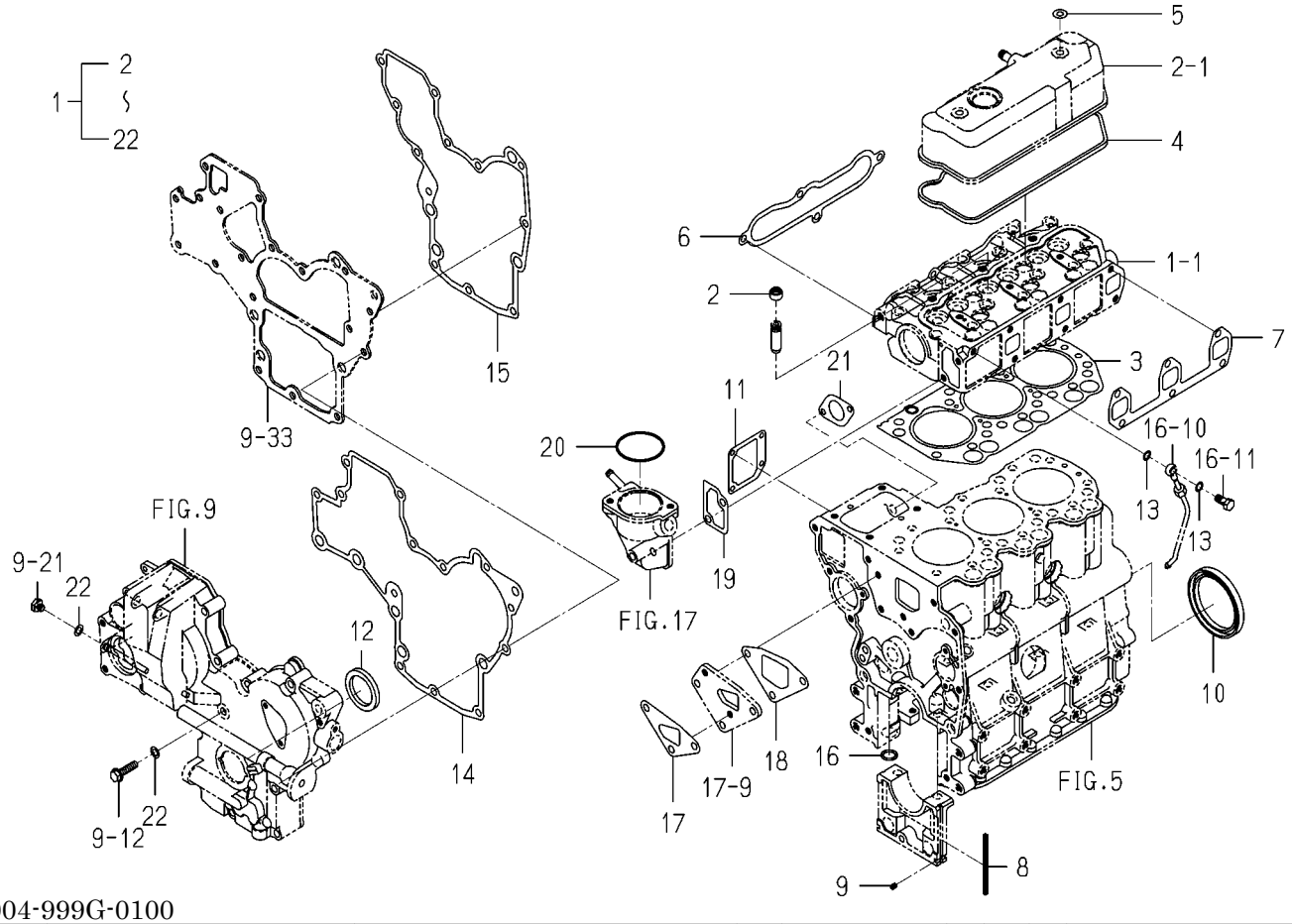

6004-999G-0100

KEY	PART CODE	DESCRIPTION	SPC	TYPE OF MODEL E3112 UP01		ITC	COL	GRP	REMARKS
1	6287-810-035-00	REPAIR/ENGINE SET	T	1					
2	6212-569-002-00	SEAL,OIL	T	6					
3	6211-141-029-20	GASKET/CYLINDERHEAD	T	1					
4	6211-173-003-00	SEAL,CYL.HEAD COVER	T	1					
5	6209-572-003-00	GASKET	T	2					
6	6214-115-001-20	GASKET,INLET MANIFOL	T	1					
7	6214-145-001-30	GASKET,EXH.MANIFOLD	T	1					
8	6211-258-001-00	SEAL,BEARING CAP	T	4					
9	6211-258-002-00	SEAL,BEARING CAP/7	T	2					
10	6209-625-001-00	SEAL,OIL	T	1					
11	6211-292-001-20	GASKET/COVER	T	1					
12	6209-625-002-00	SEAL,OIL	T	1					
13	6209-920-002-00	PACKING	T	2					
14	6211-312-003-20	GASKET/GEARCASE	T	1					
15	6211-312-004-20	GASKET/PLATE	T	1					
16	V720-102-401-50	O-RING/P15	T	1					
17	6213-614-003-10	GASKET/WATER PUMP	T	1					
18	6213-614-004-10	GASKET,SPACER	T	1					
19	6213-743-002-10	GASKET/HOUSING	T	1					
20	V723-102-005-50	O-RING	T	1					
21	6209-630-002-10	GASKET	T	1					
22	6209-500-003-00	WASHER/08X14X01	T	2					

FIG. 26 COMPONENT PARTS FOR 6215-300-036-10 ON Fig.019

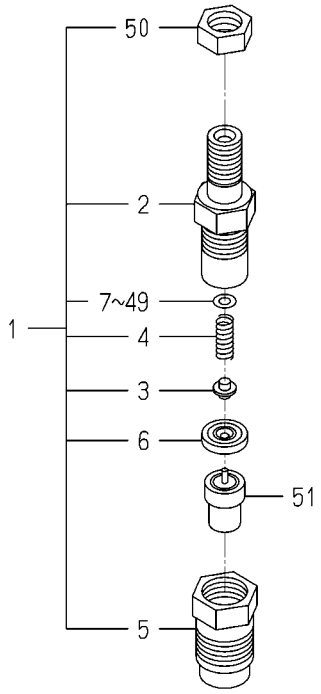

6215-300-036-1B

KEY	PART CODE	DESCRIPTION	SPC	TYPE OF MODEL E3112 UP01		ITC	COL	GRP	REMARKS
1	6215-330-024-10	HOLDER/NOZZLE ASSY	*	3					
2	6215-331-008-00	BODY/NOZZLE HOLDER	*	3					
3	6215-342-001-00	PIN,NOZZLE HOLDER	*	3					
4	6215-343-001-00	SPRING/NOZZLEHOLDER	*	3					
5	6215-332-013-00	NUT/NOZZLERETAINING	*	3					
6	6215-339-001-00	PIECE,DISTANCE	*	3					
7	6215-345-001-00	WASHER/0.9	*	3					
8	6215-345-002-00	WASHER/0.925	*	3					
9	6215-345-003-00	WASHER/0.95	*	3					
10	6215-345-004-00	WASHER/0.975	*	3					
11	6215-345-005-00	WASHER/1.0	*	3					
12	6215-345-006-00	WASHER/1.025	*	3					
13	6215-345-007-00	WASHER/1.05	*	3					
14	6215-345-008-00	WASHER/1.075	*	3					
15	6215-345-009-00	WASHER/1.1	*	3					
16	6215-345-010-00	WASHER/1.125	*	3					
17	6215-345-011-00	WASHER/1.15	*	3					
18	6215-345-012-00	WASHER/1.175	*	3					
19	6215-345-013-00	WASHER/1.2	*	3					
20	6215-345-014-00	WASHER/1.225	*	3					
21	6215-345-015-00	WASHER/1.25	*	3					
22	6215-345-016-00	WASHER/1.275	*	3					
23	6215-345-017-00	WASHER/1.3	*	3					
24	6215-345-018-00	WASHER/1.325	*	3					
25	6215-345-019-00	WASHER/1.35	*	3					
26	6215-345-020-00	WASHER/1.375	*	3					
27	6215-345-021-00	WASHER/1.4	*	3					
28	6215-345-022-00	WASHER/1.425	*	3					
29	6215-345-023-00	WASHER/1.45	*	3					
30	6215-345-024-00	WASHER/1.475	*	3					

FIG. 26 COMPONENT PARTS FOR 6215-300-036-10 ON Fig.019

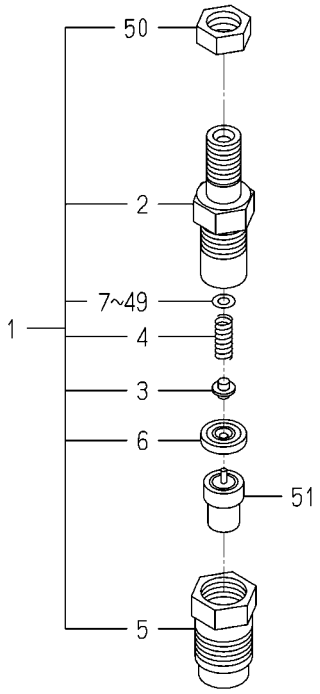

6215-300-036-1B

KEY	PART CODE	DESCRIPTION	SPC	TYPE OF MODEL E3112 UP01		ITC	COL	GRP	REMARKS
31	6215-345-025-00	WASHER/1.5	*	3					
32	6215-345-026-00	WASHER/1.525	*	3					
33	6215-345-027-00	WASHER/1.55	*	3					
34	6215-345-028-00	WASHER/1.575	*	3					
35	6215-345-029-00	WASHER/1.6	*	3					
36	6215-345-030-00	WASHER/1.625	*	3					
37	6215-345-031-00	WASHER/1.65	*	3					
38	6215-345-032-00	WASHER/1.675	*	3					
39	6215-345-033-00	WASHER/1.7	*	3					
40	6215-345-034-00	WASHER/1.725	*	3					
41	6215-345-035-00	WASHER/1.75	*	3					
42	6215-345-036-00	WASHER/1.775	*	3					
43	6215-345-037-00	WASHER/1.8	*	3					
44	6215-345-038-00	WASHER/1.825	*	3					
45	6215-345-039-00	WASHER/1.85	*	3					
46	6215-345-040-00	WASHER/1.875	*	3					
47	6215-345-041-00	WASHER/1.9	*	3					
48	6215-345-042-00	WASHER/1.925	*	3					
49	6215-345-043-00	WASHER/1.95	*	3					
50	6215-359-002-00	NUT	*	3					
51	6215-311-027-00	NOZZLE ASSY	*	3					

FIG. 27 COMPONENT PARTS FOR 6215-600-103-30 ON Fig.020

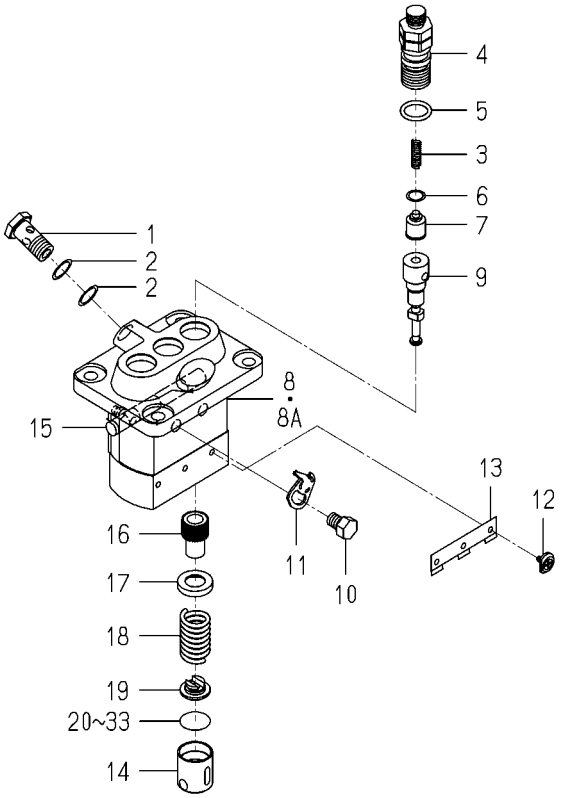

6215-600-103-3I

KEY	PART CODE	DESCRIPTION	SPC	TYPE OF MODEL E3112 UP01		ITC	COL	GRP	REMARKS
1	6215-619-009-00	SCREW/HOLLOW	*	1 -321421					
2	6215-619-010-00	WASHER/AIR BLEEDER	*	2 -321421					
3	6215-643-006-00	SPRING/DELIVERYVALVE	*	3					
4	6215-644-007-00	HOLDER/DELIVERYVALVE	*	3					
5	6215-649-019-00	ORING	*	3					
6	6215-649-002-00	GASKET/DELIVERYVALVE	*	3					
7	6215-641-006-00	VALVE ASSY	*	3					
8	6215-611-017-00	HOUSING ASSY	*	1 -323188					
8A	6215-611-001-00	HOUSING ASSY	*	1 323189-					
9	6215-631-019-00	ELEMENT ASSY	*	3					
10	6215-619-022-00	BOLT/WASHERHEAD	*	2					
11	6215-612-001-00	PLATE/ADJUSTING	*	2					
12	6215-629-001-00	PIN/INJECTIONPUMP	*	3					
13	6215-629-002-00	PLATE	*	1					
14	6215-622-001-00	TAPPET/INJECTIO ASSY	*	3					
15	6215-637-001-00	RACK/CONTROL ASSY	*	1					
16	6215-635-001-00	SLEEVE/PLUNGER	*	3					
17	6215-639-004-00	SEAT/SPRING/UPPER	*	3					
18	6215-634-001-00	SPRING/PUMPPLUNGER	*	3					
19	6215-639-005-00	SEAT/SPRING/LOWER	*	3					
20	6215-629-003-00	PLATE/TAPPET/AD 0.6	*	1					
21	6215-629-004-00	PLATE/TAPPET/AD 0.7	*	1					
22	6215-629-005-00	PLATE/TAPPET/AD 0.8	*	1					
23	6215-629-006-00	PLATE/TAPPET/AD 0.9	*	1					
24	6215-629-007-00	PLATE/TAPPET/AD 1.0	*	1					
25	6215-629-008-00	PLATE/TAPPET/AD 0.2	*	1					
26	6215-629-009-00	PLATE/TAPPET/AD 0.3	*	1					
27	6215-629-010-00	PLATE/TAPPET/AD 0.4	*	1					
28	6215-629-011-00	PLATE/TAPPET/AD 0.5	*	3					
29	6215-629-012-00	PLATE/TAPPET/AD 0.25	*	1					

FIG. 27 COMPONENT PARTS FOR 6215-600-103-30 ON Fig.020

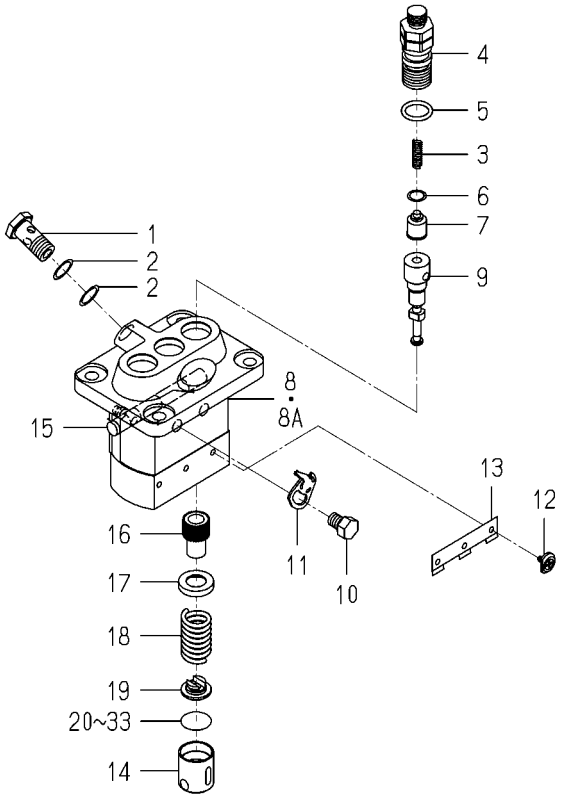

6215-600-103-3I

KEY	PART CODE	DESCRIPTION	SPC	TYPE OF MODEL E3112 UP01		ITC	COL	GRP	REMARKS
30	6215-629-013-00	PLATE/TAPPET/AD 0.35	*	1					
31	6215-629-014-00	PLATE/TAPPET/AD 0.45	*	1					
32	6215-629-015-00	PLATE/TAPPET/AD 0.55	*	1					
33	6215-629-016-00	PLATE/TAPPET/AD 0.65	*	1					

FIG. 28 COMPONENT PARTS FOR 6281-100-014-00 ON Fig.023

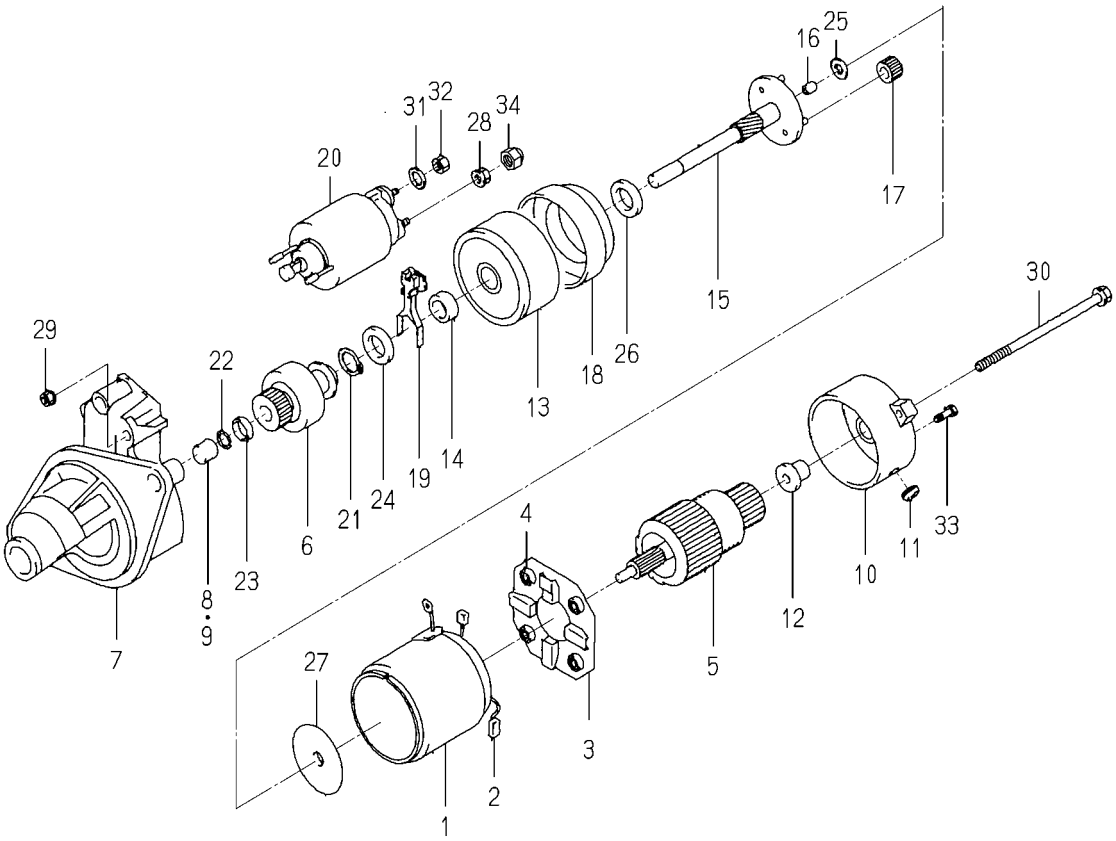

6281-100-014-0A

KEY	PART CODE	DESCRIPTION	SPC	TYPE OF MODEL E3112 UP01		ITC	COL	GRP	REMARKS
1	6281-111-009-00	YOKE/STARTER ASSY	*	1					
2	6281-119-009-00	BRUSH/STARTER	*	2					
3	6281-118-007-00	HOLDER/STARTER ASSY	*	1					
4	6281-117-003-00	SPRING/STARTERBRUSH	*	4					
5	6281-121-010-00	ARMATURE/STARTE ASSY	*	1					
6	6281-124-011-00	CLUTCH/STARTER ASSY	*	1					
7	6281-129-064-00	HOUSING/STARTER ASSY	*	1					
8	6281-129-080-00	BEARING/NEEDLE	*	1					
9	6281-129-058-00	BEARING/NEEDLE	*	1					
10	6281-115-017-00	FRAME/COMMUTATOR END	*	1					
11	6281-115-018-00	COVER	*	1					
12	6281-129-065-00	BEARING/OILLESS	*	1					
13	6281-129-066-00	BEARING/WITH SHOCKAB	*	1					
14	6281-129-067-00	BEARING/OILLESS	*	1					
15	6281-129-068-00	SHAFT/STARTER PLANET	*	1					
16	6281-129-069-00	BEARING/OILLESS	*	1					
17	6281-129-070-00	GEAR/STARTER PLANETA	*	3					
18	6281-129-071-00	GEAR/STARTERINTERNAL	*	1					
19	6281-127-003-00	LEVER/PINIONDRIVE	*	1					
20	6281-151-014-00	SWITCH/MAGNETIC ASSY	*	1					
21	6281-129-072-00	RING/SNAP	*	1					
22	6281-129-073-00	RING/SNAP	*	1					
23	6281-129-074-00	NUT/PINIONSTOP	*	1					
24	6281-129-075-00	WASHER/SK	*	1					
25	6281-129-076-00	WASHER/SK	*	1					
26	6281-129-077-00	WASHER/SK	*	1					
27	6281-129-078-00	PLATE	*	1					
28	6281-129-030-00	NUT	*	1					
29	6281-129-029-00	NUT	*	2					
30	6281-129-043-00	BOLT/THROUGH	*	2					

FIG. 28 COMPONENT PARTS FOR 6281-100-014-00 ON Fig.023

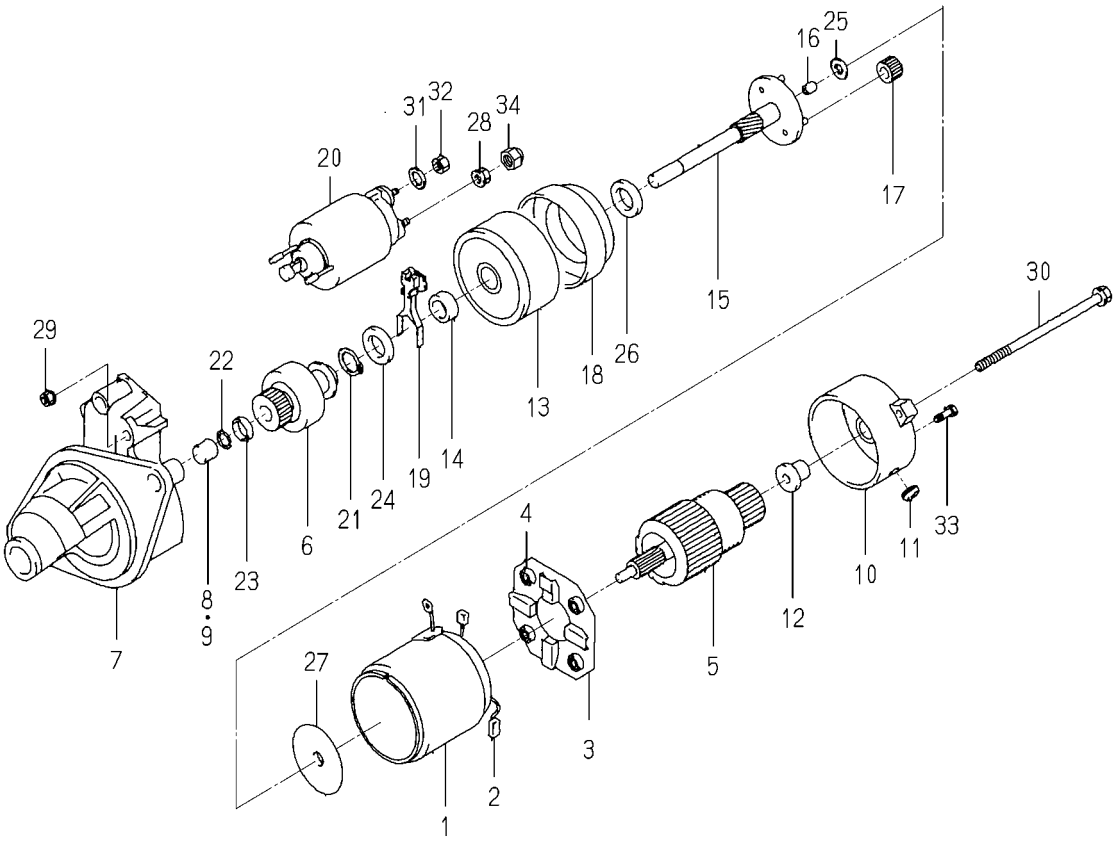

6281-100-014-0A

KEY	PART CODE	DESCRIPTION	SPC	TYPE OF MODEL E3112 UP01		ITC	COL	GRP	REMARKS
31	6909-150-508-00	WASHER	*	1					
32	6909-110-408-00	NUT/M8	*	1					
33	6281-129-062-00	SCREW	*	2					
34	6281-129-079-00	NUT	*	1					

E N G I N E

FD620DBB01···PZ80E16(HG TYPE)

5345-097-100-00

FIG. 1 CYLINDER/CRANKCASE

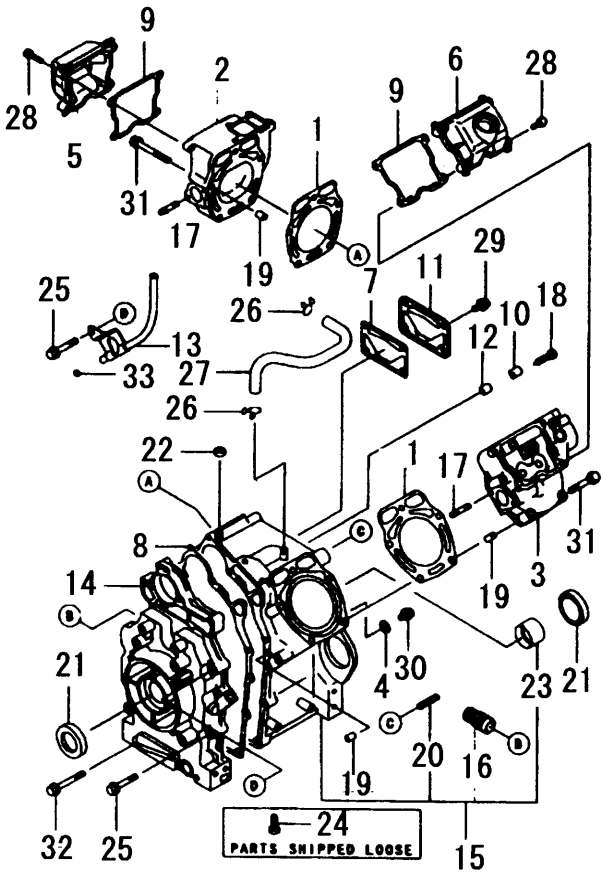

5345-001A-

KEY	PART CODE	DESCRIPTION	SPC	TYPE OF MODEL FD620D BB01		ITC	COL	GRP	REMARKS
1	5110-042-107-XX	GASKET,HEAD	*	2					110042107
2	5110-082-139-XX	HEAD,CYLINDER	*	1					110082139
3	5110-086-033-XX	HEAD,CYLINDER COMP	*	1					110086033
4	5110-093-028-XX	GASKET,8.2X12X1	*	2					110093028
5	5110-222-081-XX	CASE-ROCKER	*	1					110222081
6	5110-222-082-XX	CASE-ROCKER	*	1					110222082
7	5110-602-089-XX	GASKET,BREATHER,COVE	*	1					110602089
8	5110-602-449-XX	GASKET,CRANKCASE COV	*	1					110602449
9	5110-612-199-XX	GASKET,CASE-ROCKER	*	2					110612199
10	5132-712-054-XX	PLATE	*	1					132712054
11	5140-242-292-XX	COVER	*	1					140242292
12	5161-262-146-XX	VALVE	*	1					161262146
13	5215-120-329-HX	PIPE,OIL GAUGE	*	1					3215120329H
14	5490-156-268-XX	COVER-CRANKCASE	*	1					490156268
15	5491-202-299-XX	CRANKCASE-COMP	*	1					491202299
16	5590-712-079-XX	JOINT	*	1					590712079
17	5920-042-142-XX	STUD	*	4					920042142
18	5920-092-308-XX	SCREW	*	1					920092308
19	5920-431-037-XX	PIN	*	6					920431037
20	5920-432-227-XX	PIN	*	1					920432227
21	5920-492-110-XX	SEAL,OIL/ISD34X5	*	2					920492110
22	5920-492-255-XX	SEAL-OIL,VC 8X12X2.5	*	1					920492255
23	5921-412-122-XX	BEARING-PLATE	*	1					921412122
24	5921-512-067-XX	BOLT	*	4					921512067
25	5921-532-130-XX	BOLT,8X45	*	6					921532130
26	5921-702-002-XX	CLAMP	*	2					921702002
27	5921-922-054-XX	TUBE	*	1					921922054
28	5130-AA0-625-XX	BOLT-FLANGED,6X25	*	8					130AA0625
29	5130-AA0-816-XX	BOLT-FLANGED,8X16	*	4					130AA0816
30	5130-AB0-812-XX	BOLT-FLANGED,8X12	*	2					130AB0812

FIG. 1 CYLINDER/CRANKCASE

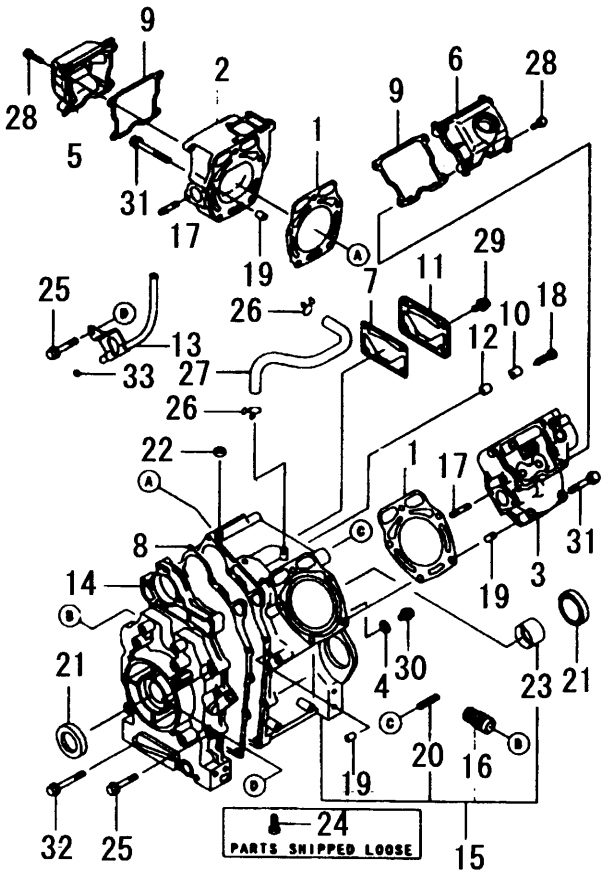

5345-001A-

KEY	PART CODE	DESCRIPTION	SPC	TYPE OF MODEL FD620D BB01		ITC	COL	GRP	REMARKS
31	5130-BA0-865-XX	BOLT-FLANGED,8X65	*	10					130BA0865
32	5130-CA0-860-XX	BOLT-FLANGED,8X60	*	2					130CA0860
33	5670-B20-10X-XX	O RING,10MM	*	1					670B2010

FIG. 2 PISTON/CRANKSHAFT

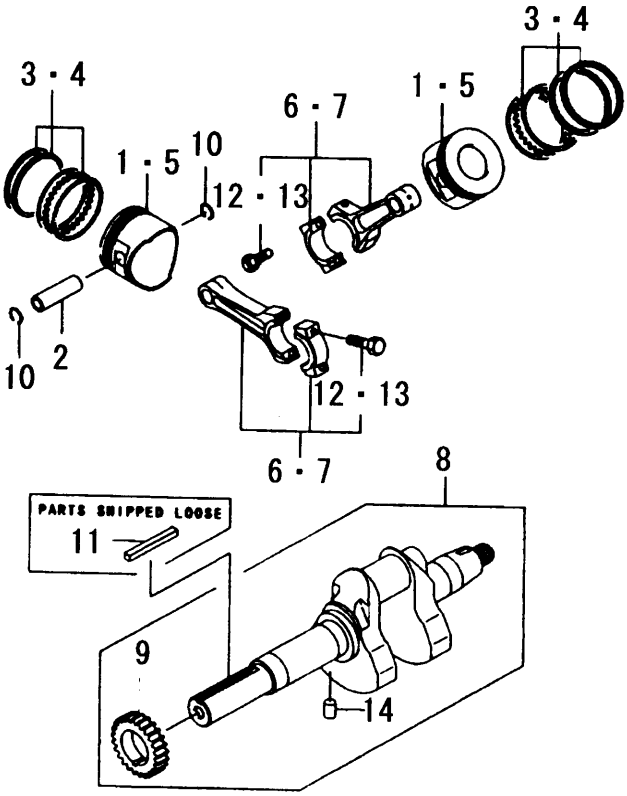

5345-002A-

KEY	PART CODE	DESCRIPTION	SPC	TYPE OF MODEL FD620D BB01		ITC	COL	GRP	REMARKS
1	5130-012-169-XX	PISTON-ENGINE	*	2					130012169
2	5130-021-013-XX	PIN-PISTON	*	2					130021013
3	5130-086-025-XX	RING SET	*	2					130086025
4	5130-256-008-XX	RING PISTON SET	*	1					130256008
5	5130-292-109-XX	PISTON	*	1					130292109
6	5132-516-068-XX	ROD-ASSY-CONNECTING	*	2					132516068
7	5132-516-069-XX	ROD-ASSY-CONNECTING	*	1					132516069
8	5491-192-130-XX	CRANKSHAFT ASSY	*	1					491192130
9	5590-512-112-XX	GEAR-SPUR	*	1					590512112
10	5920-360-21X-XX	RING-SNAP	*	4					92036021
11	5920-382-103-XX	KEY	*	1					920382103
12	5921-532-054-XX	BOLT,7X35.2	*	1					921532054
13	5921-532-054-XX	BOLT,7X35.2	*	2					921532054
14	5551-A04-08X-XX	PIN-DOWEL	*	1					551A0408

FIG. 3 VALVE/CAMSHAFT

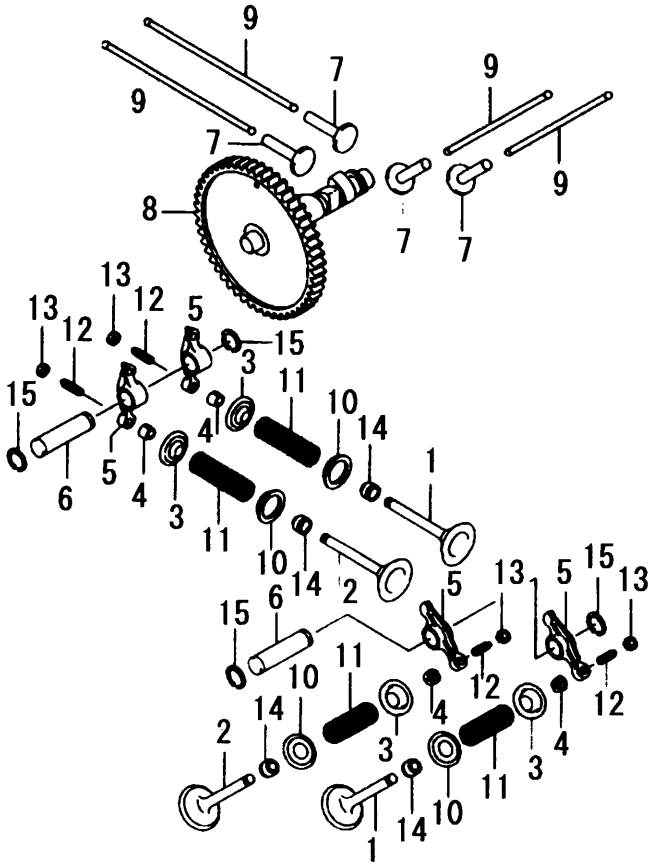

5345-003A-

KEY	PART CODE	DESCRIPTION	SPC	TYPE OF MODEL FD620D BB01		ITC	COL	GRP	REMARKS
1	5120-042-115-XX	VALVE-INTAKE	*	2					120042115
2	5120-052-093-XX	VALVE,EXHAUST	*	2					120052093
3	5120-092-067-XX	RETAINER,VALVE SPRIN	*	4					120092067
4	5120-112-056-XX	COLLET	*	8					120112056
5	5120-162-056-XX	ARM-ROCKER	*	4					120162056
6	5120-202-059-XX	SHAFT-ROCKER	*	2					120202059
7	5120-322-064-XX	TAPPET	*	4					120322064
8	5120-442-239-XX	CAMSHAFT,VALVE	*	1					120442239
9	5131-162-057-XX	PUSHROD	*	4					131162057
10	5391-082-057-XX	RETAINER,SPRING	*	4					391082057
11	5490-782-082-XX	SPRING	*	4					490782082
12	5920-091-109-XX	SCREW	*	4					920091109
13	5920-151-137-XX	NUT	*	4					920151137
14	5920-492-109-XX	SEAL-OIL	*	4					920492109
15	5480-J12-00X-XX	RING SNAP/S12	*	4					480J1200

FIG. 4 LUBRICATION-EQUIPMENT

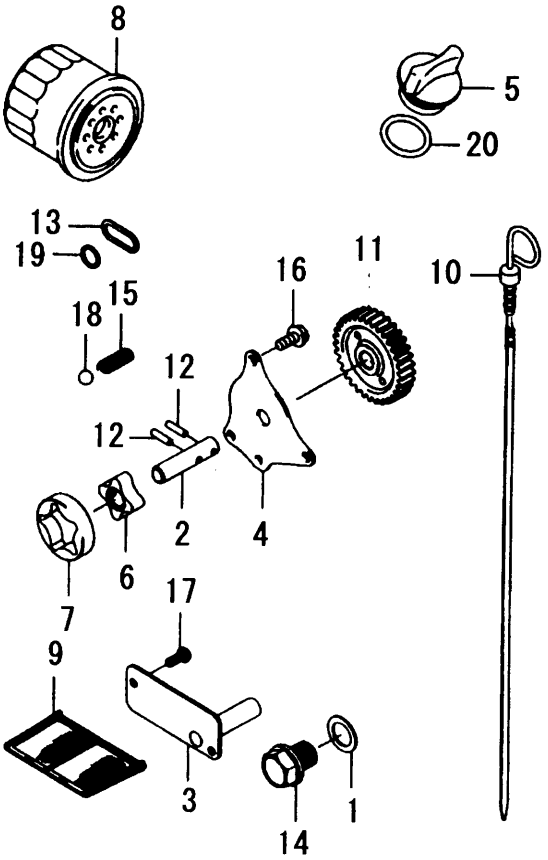

5345-004A-

KEY	PART CODE	DESCRIPTION	SPC	TYPE OF MODEL FD620D BB01		ITC	COL	GRP	REMARKS
1	5110-092-566-XX	GASKET,DRAIN PLUG	*	1					110092566
2	5131-072-296-XX	SHAFT,OIL PUMP	*	1					131072296
3	5131-832-419-XX	PLATE	*	1					131832419
4	5140-242-113-XX	COVER,OIL PUMP	*	1					140242113
5	5161-152-126-XX	CAP-OIL FILLER	*	1					161152126
6	5161-542-053-XX	ROTOR-PUMP,IN	*	1					161542053
7	5161-542-054-XX	ROTOR,PUMP	*	1					161542054
8	5490-652-071-XX	FILTER OIL	*	1					490652071
9	5490-652-072-XX	FILTER-OIL	*	1					490652072
10	5520-052-122-XX	GAUGE	*	1					520052122
11	5590-512-114-XX	GEAR-SPUR	*	1					590512114
12	5920-420-14X-XX	PIN	*	2					92042014
13	5920-552-086-XX	RING-O	*	1					920552086
14	5920-662-099-XX	PLUG,DRAIN	*	1					920662099
15	5921-452-132-XX	SPRING	*	1					921452132
16	5130-AA0-612-XX	BOLT-FLANGED,6X12	*	3					130AA0612
17	5214-AA0-512-XX	SCREW	*	2					214AA0512
18	5600-A13-00X-XX	BALL-STEEL	*	1					600A1300
19	5670-B20-11X-XX	O RING,11MM	*	1					670B2011
20	5670-B30-25X-XX	O RING,25MM	*	1					670B3025

FIG. 5 COOLING-EQUIPMENT

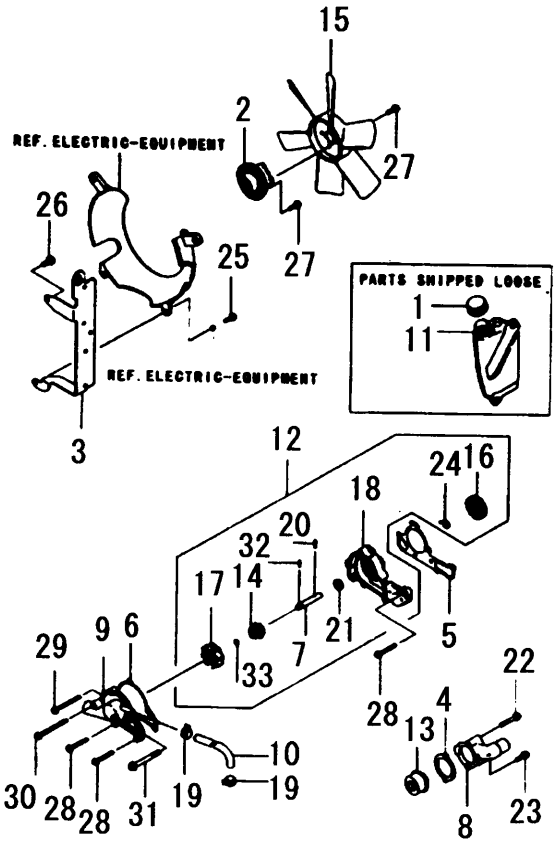

5345-005A-

KEY	PART CODE	DESCRIPTION	SPC	TYPE OF MODEL FD620D BB01		ITC	COL	GRP	REMARKS
1	5110-121-084-XX	CAP	*	1					110121084
2	5110-482-039-XX	BRACKET,COOLINF FAN	*	1					110482039
3	5110-552-007-9H	BRACKET	*	1					1105520079H
4	5110-602-084-XX	GASKET,THERMOSTAT CO	*	1					110602084
5	5110-602-450-XX	GASKET,PUMP CASE	*	1					110602450
6	5110-602-451-XX	GASKET,PUMP COVER	*	1					110602451
7	5131-072-097-XX	SHAFT	*	1					131072097
8	5140-912-102-XX	COVER	*	1					140912102
9	5161-422-069-XX	COVER-PUMP	*	1					161422069
10	5390-622-051-XX	HOSE-COOLING	*	1					390622051
11	5430-782-055-XX	RESERVOIR	*	1					430782055
12	5490-442-066-XX	PUMP-WATER	*	1					490442066
13	5490-542-056-XX	THERMOSTAT	*	1					490542056
14	5490-631-056-XX	SEAL-MECHANICAL	*	1					490631056
15	5590-412-084-XX	FAN,COOLING	*	1					590412084
16	5590-512-113-XX	GEAR-SPUR	*	1					590512113
17	5592-562-057-XX	IMPELLER	*	1					592562057
18	5593-362-052-XX	CASE-PUMP	*	1					593362052
19	5920-371-181-XX	CLAMP	*	2					920371181
20	5920-420-14X-XX	PIN	*	1					92042014
21	5920-492-111-XX	SEAL,OIL/IS 10X20	*	1					920492111
22	5921-502-230-XX	BOLT,6X40	*	1					921502230
23	5921-502-231-XX	BOLT,6X20	*	1					921502231
24	5922-002-044-XX	WASHER	*	1					922002044
25	5130-AA0-620-XX	BOLT-FLANGED,6X20	*	1					130AA0620
26	5130-AA0-816-XX	BOLT-FLANGED,8X16	*	1					130AA0816
27	5130-BA0-620-XX	BOLT-FLANGED,6X20	*	8					130BA0620
28	5130-CA0-645-XX	BOLT-FLANGED,6X45	*	3					130CA0645
29	5130-CA0-665-XX	BOLT-FLANGED,6X65	*	1					130CA0665
30	5130-CA0-675-XX	BOLT-FLANGED,6X75	*	1					130CA0675

FIG. 5 COOLING-EQUIPMENT

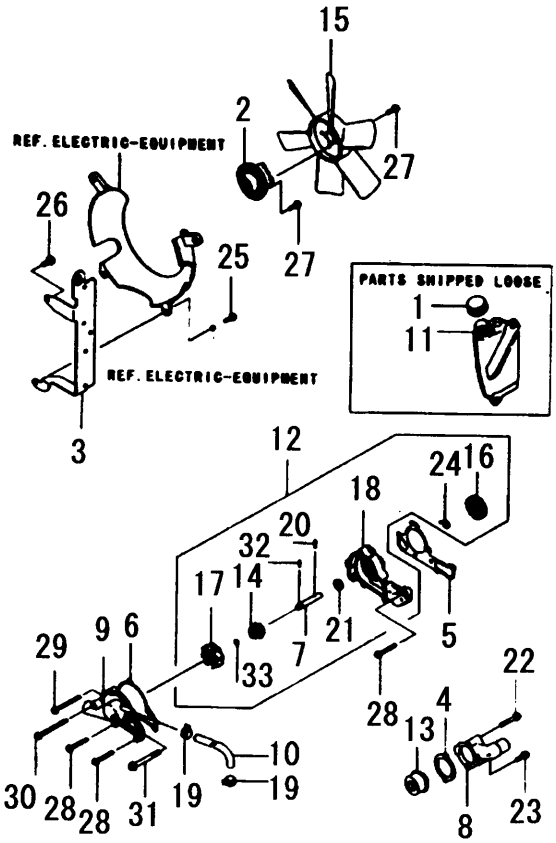

5345-005A-

KEY	PART CODE	DESCRIPTION	SPC	TYPE OF MODEL FD620D BB01		ITC	COL	GRP	REMARKS
31	5130-CA0-870-XX	BOLT-FLANGED,8X70	*	1					130CA0870
32	5551-A03-14X-XX	PIN-DOWEL	*	1					551A0314
33	5670-B15-07X-XX	O RING	*	1					670B1507

FIG. 6 ELECTRIC-EQUIPMENT

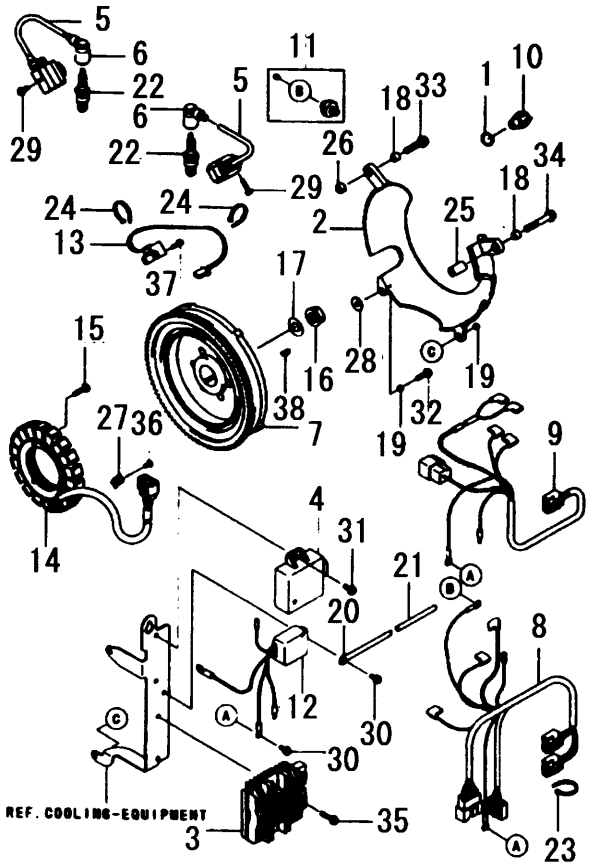

5345-006A-

KEY	PART CODE	DESCRIPTION	SPC	TYPE OF MODEL FD620D BB01		ITC	COL	GRP	REMARKS
1	5110-092-766-XX	GASKET,16X24X1	*	1					110092766
2	5140-832-051-XX	COVER-FLYWHEEL	*	1					140832051
3	5210-662-084-XX	REGULATOR-VOLTAGE	*	1					210662084
4	5211-192-160-XX	IGNITOR	*	1					211192160
5	5211-212-094-XX	COIL,IGNITION	*	2					211212094
6	5211-302-060-XX	CAP,SPARK PLUG	*	2					211302060
7	5211-932-194-XX	FLYWHEEL-ASSY	*	1					211932194
8	5260-312-082-XX	HARNESS	*	1					260312082
9	5260-312-083-XX	HARNESS	*	1					260312083
10	5270-102-181-XX	SWITCH	*	1					270102181
11	5270-102-234-XX	SWITCH	*	1					270102234
12	5270-342-058-XX	RELAY	*	1					270342058
13	5590-262-066-XX	COIL,HOUSING	*	1					590262066
14	5590-312-135-XX	COIL-CHARGING	*	1					590312135
15	5920-092-273-XX	SCREW,6X25	*	3					920092273
16	5920-152-167-XX	NUT	*	1					920152167
17	5920-222-245-XX	WASHER	*	1					920222245
18	5920-271-568-XX	COLLAR	*	2					920271568
19	5920-272-096-XX	COLLAR	*	2					920272096
20	5920-372-006-XX	CLAMP	*	1					920372006
21	5920-592-011-XX	TUBE,5X6X75	*	1					920592011
22	5920-702-112-XX	PLUG	*	2					920702112
23	5920-721-195-XX	BAND	*	1					920721195
24	5920-721-237-XX	BAND	*	2					920721237
25	5921-522-091-XX	COLLAR,8.5X14X25.5	*	1					921522091
26	5921-522-092-XX	COLLAR,8.5X14X7.5	*	1					921522092
27	5921-712-084-XX	CLAMP	*	1					921712084
28	5922-002-032-XX	WASHER	*	1					922002032
29	5130-AA0-520-XX	BOLT-FLANGED,5X20	*	2					130AA0520
30	5130-AA0-612-XX	BOLT-FLANGED,6X12	*	2					130AA0612

FIG. 6 ELECTRIC-EQUIPMENT

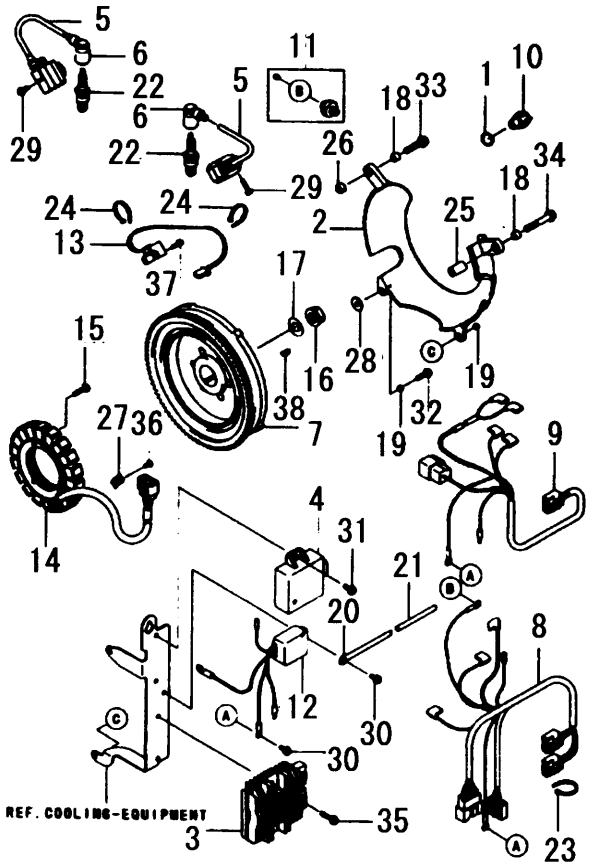

5345-006A-

KEY	PART CODE	DESCRIPTION	SPC	TYPE OF MODEL FD620D BB01		ITC	COL	GRP	REMARKS
31	5130-AA0-614-XX	BOLT-FLANGED,6X14	*	2					130AA0614
32	5130-AA0-620-XX	BOLT-FLANGED,6X20	*	1					130AA0620
33	5130-AA0-835-XX	BOLT-FLANGED,8X35	*	1					130AA0835
34	5130-AA0-850-XX	BOLT-FLANGED,8X50	*	1					130AA0850
35	5130-BA0-625-XX	BOLT-FLANGED,6X25	*	2					130BA0625
36	5214-AA0-510-XX	SCREW	*	1					214AA0510
37	5225-AA0-414-XX	SCREW	*	2					225AA0414
38	5510-A51-00X-XX	KEY	*	1					510A5100

FIG. 7 CONTROL-EQUIPMENT

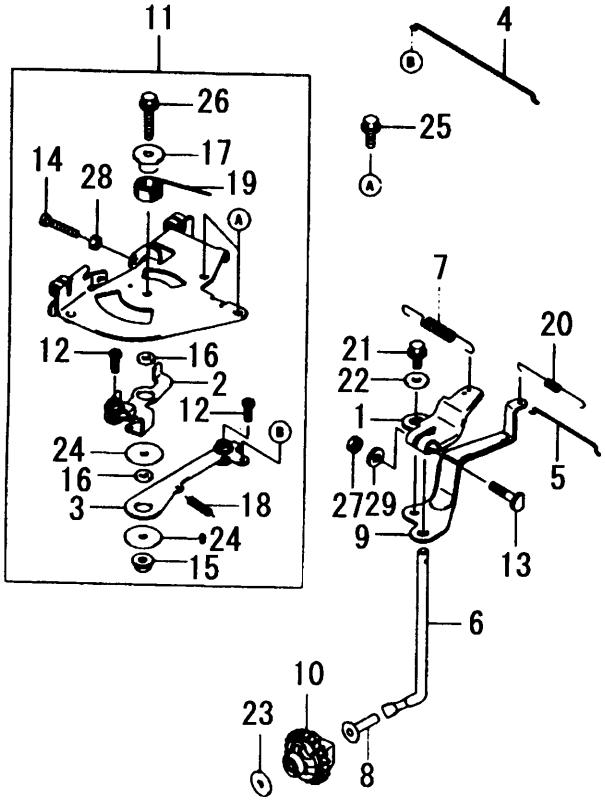

5345-007A-

KEY	PART CODE	DESCRIPTION	SPC	TYPE OF MODEL FD620D BB01		ITC	COL	GRP	REMARKS
1	5110-532-070-XX	BRACKET	*	1					110532070
2	5132-362-163-XX	LEVER-COMP	*	1					132362163
3	5132-362-164-XX	LEVER-COMP	*	1					132362164
4	5161-712-075-XX	LINK	*	1					161712075
5	5161-712-097-XX	LINK	*	1					161712097
6	5390-032-088-XX	ARM-PIVOT	*	1					390032088
7	5391-292-091-XX	SPRING-GOVERNOR	*	1					391292091
8	5420-362-060-XX	SLEAVE	*	1					420362060
9	5491-032-162-XX	ARM-GOVERNOR	*	1					491032162
10	5491-102-093-XX	GOVERNOR-ASSY	*	1					491102093
11	5491-132-178-XX	PANEL-COMP-CONTROL	*	1					491132178
12	5920-022-087-XX	BOLT	*	2					920022087
13	5920-022-269-XX	BOLT	*	1					920022269
14	5920-092-381-XX	SCREW,5X30	*	2					920092381
15	5920-151-339-XX	NUT	*	1					920151339
16	5921-432-135-XX	COLLAR,6X13X2.3	*	2					921432135
17	5921-432-148-XX	COLLAR	*	1					921432148
18	5921-442-052-XX	SPRING	*	1					921442052
19	5921-452-056-XX	SPRING	*	1					921452056
20	5921-452-125-XX	SPRING	*	1					921452125
21	5921-530-009-XX	BOLT,6X12	*	1					921530009
22	5922-002-035-XX	WASHER	*	1					922002035
23	5922-002-036-XX	WASHER	*	1					922002036
24	5922-002-091-XX	WASHER,6X28X1.6	*	2					922002091
25	5130-AA0-616-XX	BOLT-FLANGED,6X16	*	2					130AA0616
26	5130-AA0-630-XX	BOLT-FLANGED,6X30	*	1					130AA0630
27	5311-AA0-600-XX	NUT-HEX,6MM	*	1					311AA0600
28	5312-AA0-500-XX	NUT-HEX,5MM	*	2					312AA0500
29	5411-AA0-600-XX	WASHER-PLAIN,6MM	*	1					411AA0600

FIG. 8 CARBURETOR

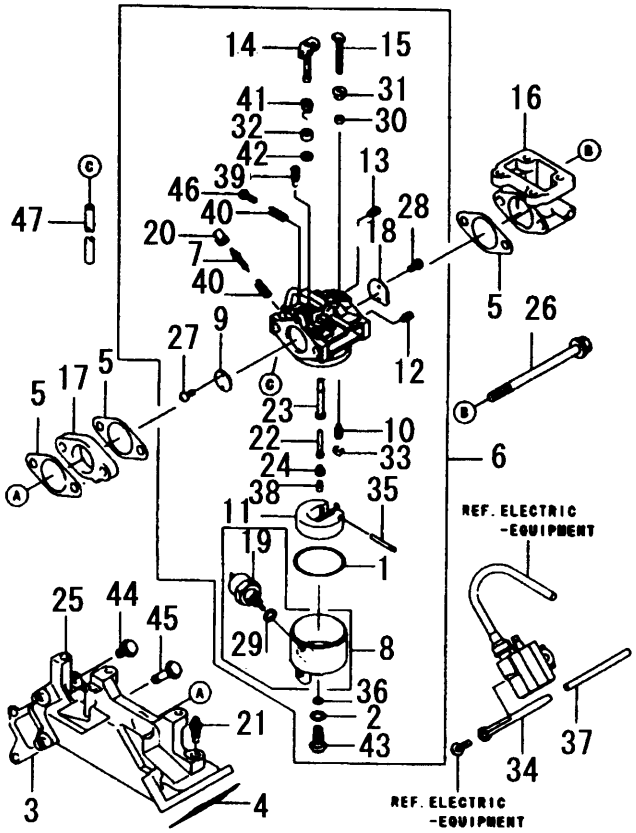

5345-008A-

KEY	PART CODE	DESCRIPTION	SPC	TYPE OF MODEL FD620D BB01		ITC	COL	GRP	REMARKS
1	5110-092-024-XX	GASKET	*	1					110092024
2	5110-092-769-XX	GASKET	*	1					110092769
3	5110-602-087-XX	GASKET,INTAKE MANIFO	*	1					110602087
4	5110-602-088-XX	GASKET,INTAKE MANIFO	*	1					110602088
5	5110-612-119-XX	GASKET	*	3					110612119
6	5150-032-851-XX	CARBURETOR-ASSY	*	1					150032851
7	5160-142-075-XX	SCREW-PILOT AIR	*	1					160142075
8	5160-202-140-XX	CHAMBER-FLOAT	*	1					160202140
9	5160-252-005-XX	VALVE-THROTTLE #100	*	1					160252005
10	5160-302-067-XX	VALVE,FLOAT	*	1					160302067
11	5160-312-066-XX	FLOAT	*	1					160312066
12	5160-352-053-XX	JET-AIR #1.6	*	1					160352053
13	5160-352-058-XX	JET-AIR #1.1	*	1					160352058
14	5160-412-249-XX	SHAFT-CARBURETOR	*	1					160412249
15	5160-412-259-XX	SHAFT-CARBURETOR	*	1					160412259
16	5160-602-201-XX	PIPE-INTAKE	*	1					160602201
17	5160-732-222-XX	INSULATOR	*	1					160732222
18	5161-262-237-XX	VALVE	*	1					161262237
19	5211-882-009-XX	SOLENOID ASSY	*	1					211882009
20	5390-762-053-XX	LIMITER	*	1					390762053
21	5430-560-03X-XX	BREATHER-BRAKE	*	1					43056003
22	5491-212-247-XX	NOZZLE-MAIN	*	1					491212247
23	5491-212-248-XX	NOZZLE-MAIN	*	1					491212248
24	5491-232-083-XX	HOLDER-MAIN JET	*	1					491232083
25	5590-762-081-XX	MANIFOLD-INTAKE	*	1					590762081
26	5920-022-254-XX	BOLT,8X110	*	2					920022254
27	5920-092-080-XX	SCREW	*	2					920092080
28	5920-092-081-XX	SCREW	*	2					920092081
29	5920-222-231-XX	WASHER	*	1					920222231
30	5920-272-003-XX	COLLAR	*	1					920272003

FIG. 8 CARBURETOR

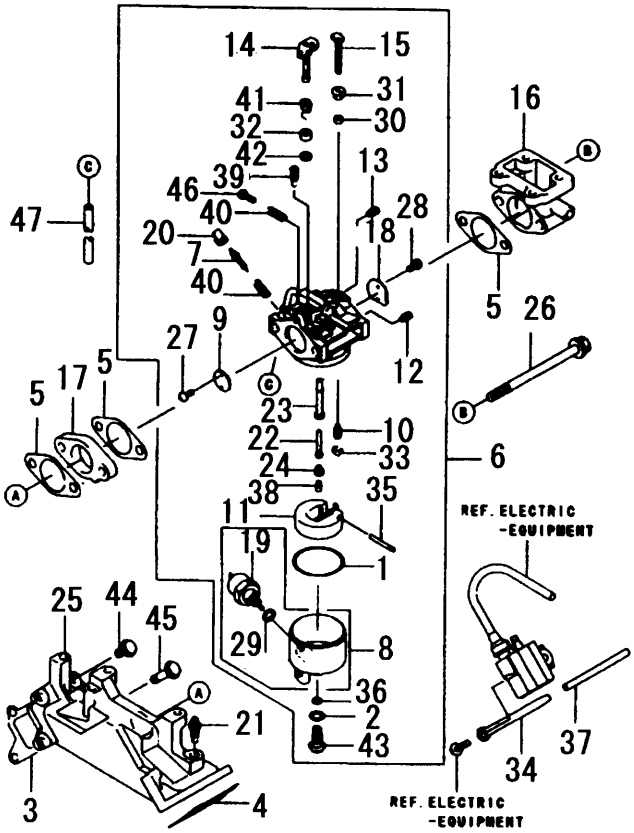

5345-008A-

KEY	PART CODE	DESCRIPTION	SPC	TYPE OF MODEL FD620D BB01		ITC	COL	GRP	REMARKS
31	5920-272-004-XX	COLLAR	*	1					920272004
32	5920-272-025-XX	COLLAR	*	1					920272025
33	5920-332-067-XX	RING, SNAP	*	1					920332067
34	5920-372-006-XX	CLAMP	*	1					920372006
35	5920-432-006-XX	PIN	*	1					920432006
36	5920-552-148-XX	O-RONG	*	1					920552148
37	5920-592-011-XX	TUBE,5X6X75	*	1					920592011
38	5920-632-432-XX	JET-MAIN,#17.5	*	1					920632432
39	5920-642-137-XX	JET-PILOT,#52.5	*	1					920642137
40	5920-812-009-XX	SPRING	*	2					920812009
41	5920-812-077-XX	SPRING	*	1					920812077
42	5920-932-002-XX	SEAL	*	1					920932002
43	5921-512-068-XX	BOLT	*	1					921512068
44	5130-AA0-620-XX	BOLT-FLANGED,6X20	*	5					130AA0620
45	5130-AA0-645-XX	BOLT-FLANGED,6X45	*	3					130AA0645
46	5214-AA0-414-XX	SCREW-PAN+-,4X14	*	1					214AA0414
47	5701-Q05-100-0X	TUBE	*	1					701Q051000

FIG. 9 AIR-FILTER/MUFFLER

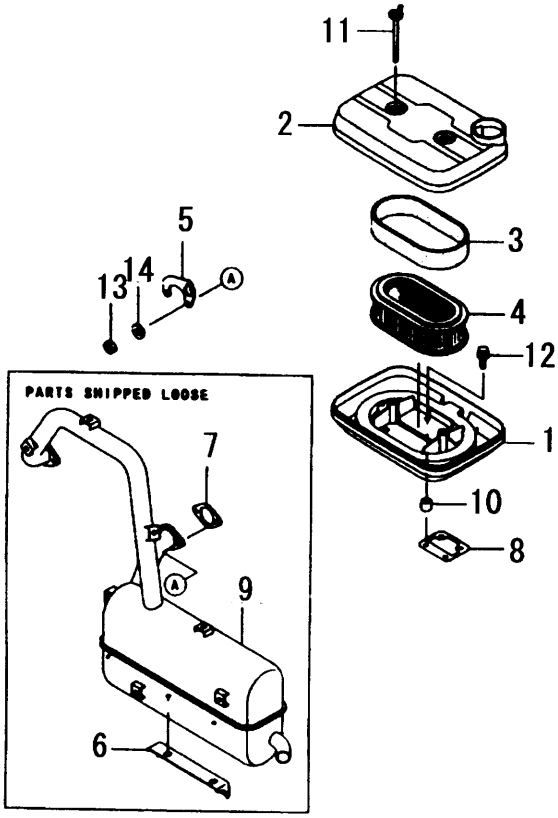

5345-009A-

KEY	PART CODE	DESCRIPTION	SPC	TYPE OF MODEL FD620D BB01		ITC	COL	GRP	REMARKS
1	5110-112-253-XX	CASE-AIR FILTER	*	1					110112253
2	5110-112-254-XX	CASE-AIR FILTER	*	1					110112254
3	5110-132-161-XX	ELEMENT,AIR-FILTER	*	1					110132161
4	5110-132-207-XX	ELEMENT,AIR FILTER	*	1					110132207
5	5110-472-057-9H	BRACKET	*	1					1104720579H
6	5110-472-125-XX	BRACKET	*	1					110472125
7	5110-602-079-XX	GASKET,MUFFLER	*	2					110602079
8	5110-612-118-XX	GASKET	*	1					110612118
9	5490-702-791-YX	MUFFLER-COMP	*	1					490702791YX
10	5921-431-336-XX	COLLAR	*	6					921431336
11	5921-502-285-XX	BOLT	*	2					921502285
12	5187-AA0-520-XX	BOLT	*	6					187AA0520
13	5311-BA0-600-XX	NUT-HEX,6MM	*	1					311BA0600
14	5461-DA0-600-XX	WASHER-SPRING,6MM	*	1					461DA0600

FIG. 10 FUEL-TANK/FUEL-VALVE

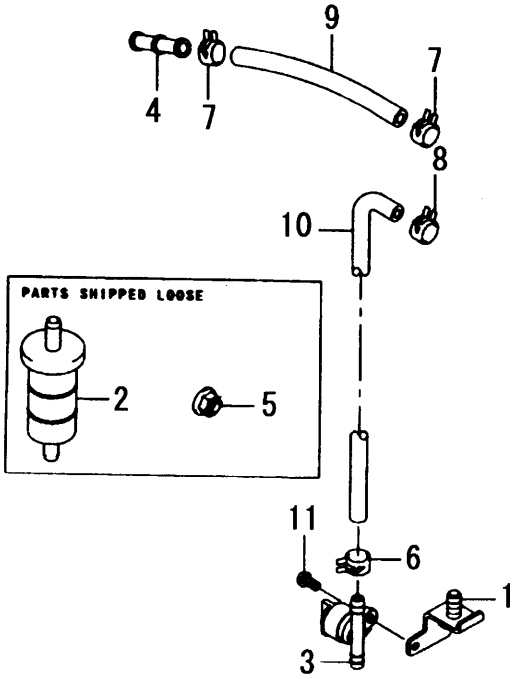

5345-010A-

KEY	PART CODE	DESCRIPTION	SPC	TYPE OF MODEL FD620D BB01		ITC	COL	GRP	REMARKS
1	5110-552-002-XX	BRACKET	*	1					110552002
2	5490-191-055-XX	FILTER,FUEL	*	1					490191055
3	5510-232-175-XX	TAP ASSY	*	1					510232175
4	5590-712-119-XX	JOINT	*	1					590712119
5	5920-151-143-XX	NUT	*	1					920151143
6	5920-372-001-XX	CLAMP	*	1					920372001
7	5920-372-113-XX	CLAMP	*	2					920372113
8	5921-702-042-XX	CLAMP	*	1					921702042
9	5921-902-139-XX	TUBE 5.8X10.8X140	*	1					921902139
10	5921-912-055-XX	TUBE 5X10X700	*	1					921912055
11	5220-AA0-510-XX	SCREW	*	1					220AA0510

FIG. 11 STARTER

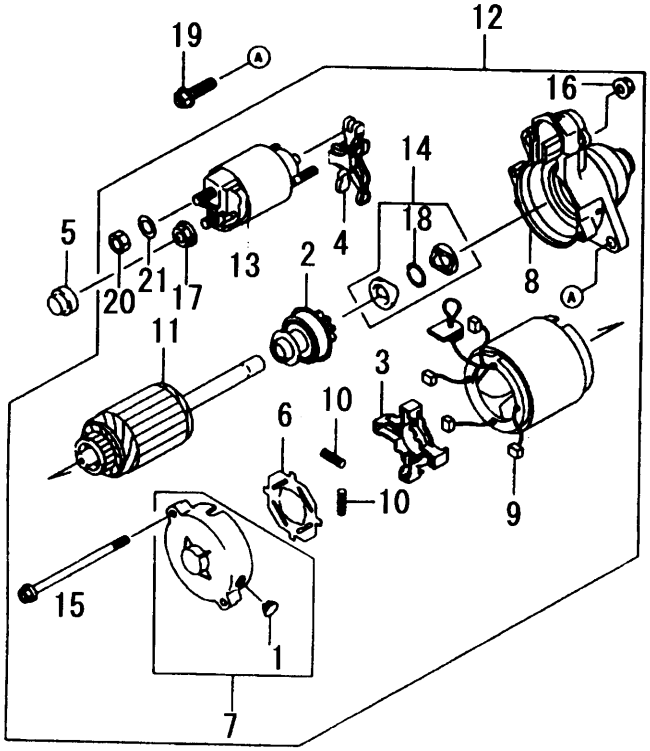

5345-011A-

KEY	PART CODE	DESCRIPTION	SPC	TYPE OF MODEL FD620D BB01		ITC	COL	GRP	REMARKS
1	5110-652-118-XX	CAP	*	1					110652118
2	5130-812-085-XX	CLUTCH ASSY	*	1					130812085
3	5130-912-068-XX	HOLDER	*	1					130912068
4	5131-682-131-XX	LEVER	*	1					131682131
5	5140-242-205-XX	COVER	*	1					140242205
6	5160-732-098-XX	INSULATOR	*	1					160732098
7	5161-462-235-XX	COVER-ASSY	*	1					161462235
8	5161-462-241-XX	COVER ASSY	*	1					161462241
9	5210-392-059-XX	BRUSH	*	4					210392059
10	5210-402-052-XX	SPRING BRUSH	*	4					210402052
11	5210-802-054-XX	ARMATURE	*	1					210802054
12	5211-632-132-XX	STARTER-ELECTRIC	*	1					211632132
13	5270-102-122-XX	SWITCH	*	1					270102122
14	5320-852-097-XX	STOPPER	*	1					320852097
15	5920-022-277-XX	BOLT	*	2					920022277
16	5920-152-146-XX	NUT	*	2					920152146
17	5920-152-147-XX	NUT	*	1					920152147
18	5920-332-081-XX	RING,SNAP	*	1					920332081
19	5130-AA0-830-XX	BOLT-FLANGED,8X30	*	2					130AA0830
20	5317-AA0-800-XX	NUT-HEX-SMALL,8MM	*	1					317AA0800
21	5461-DA0-800-XX	WASHER-SPRING,8MM	*	1					461DA0800

FIG. 12 LABEL

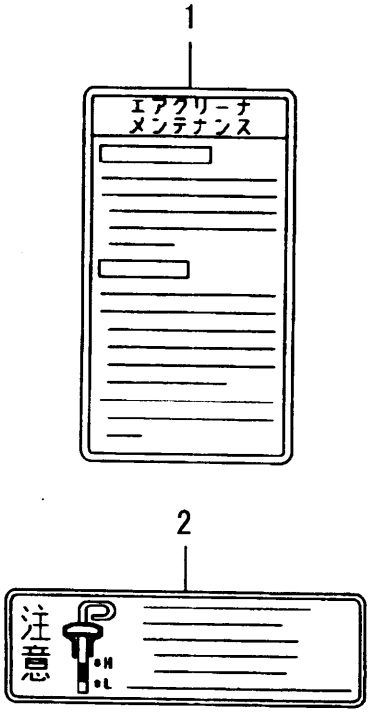

5345-012A-

KEY	PART CODE	DESCRIPTION	SPC	TYPE OF MODEL FD620D BB01		ITC	COL	GRP	REMARKS
1	5560-312-419-XX	LABEL	*	1					560312419
2	5560-332-060-XX	LABEL-MANUAL	*	1					560332060

C H A S S I S

FIG. 1 GUIDE(HARNESS/ENGINE)SYSTEM (D TYPE EXCEPT F)

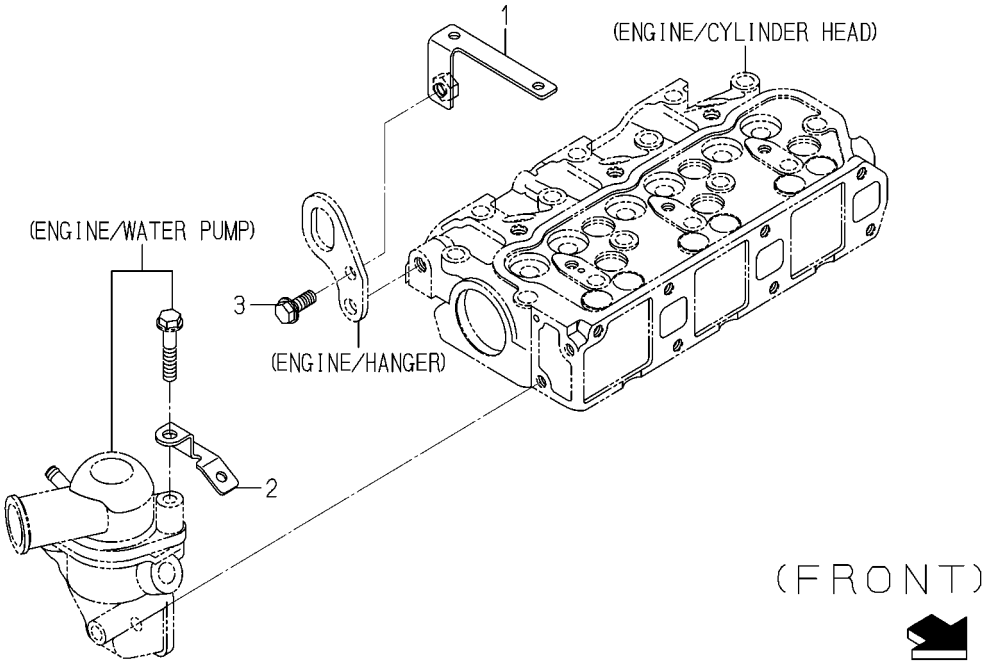

2213-101A-0100

KEY	PART CODE	DESCRIPTION	SPC	TYPE OF MODEL PZ80E16		ITC	COL	GRP	REMARKS
1	2213-101-210-00	GUIDE/HARNESS COMP	*	1 100001-					
2	2213-101-018-00	GUIDE/HARNESS/A	*	1 100001-					
3	V231-360-802-00	FLANGEBOLT	*	1 100001-					

FIG. 2 GUIDE(HARNESS/ENGINE)SYSTEM (D-F TYPE)

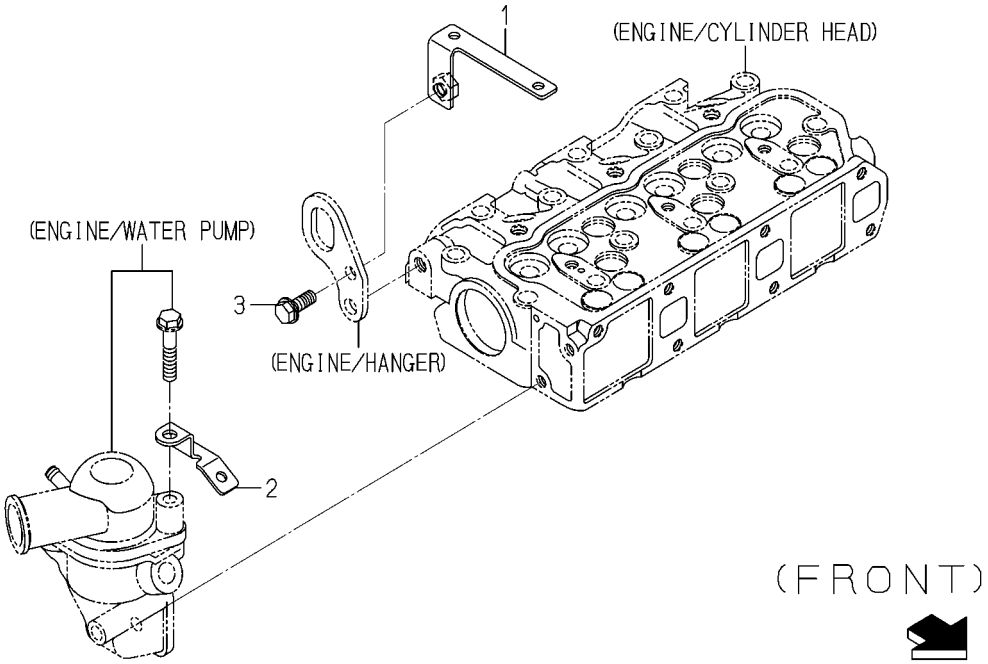

2213-101B-0100

KEY	PART CODE	DESCRIPTION	SPC	TYPE OF MODEL PZ80E16		ITC	COL	GRP	REMARKS
1	2213-101-210-00	GUIDE/HARNESS COMP	*	1 100001-					
2	2213-101-018-00	GUIDE/HARNESS/A	*	1 100001-					
3	V231-360-802-00	FLANGEBOLT	*	1 100001-					

FIG. 3 BRACKET(ENGINE)SYSTEM(D TYPE)

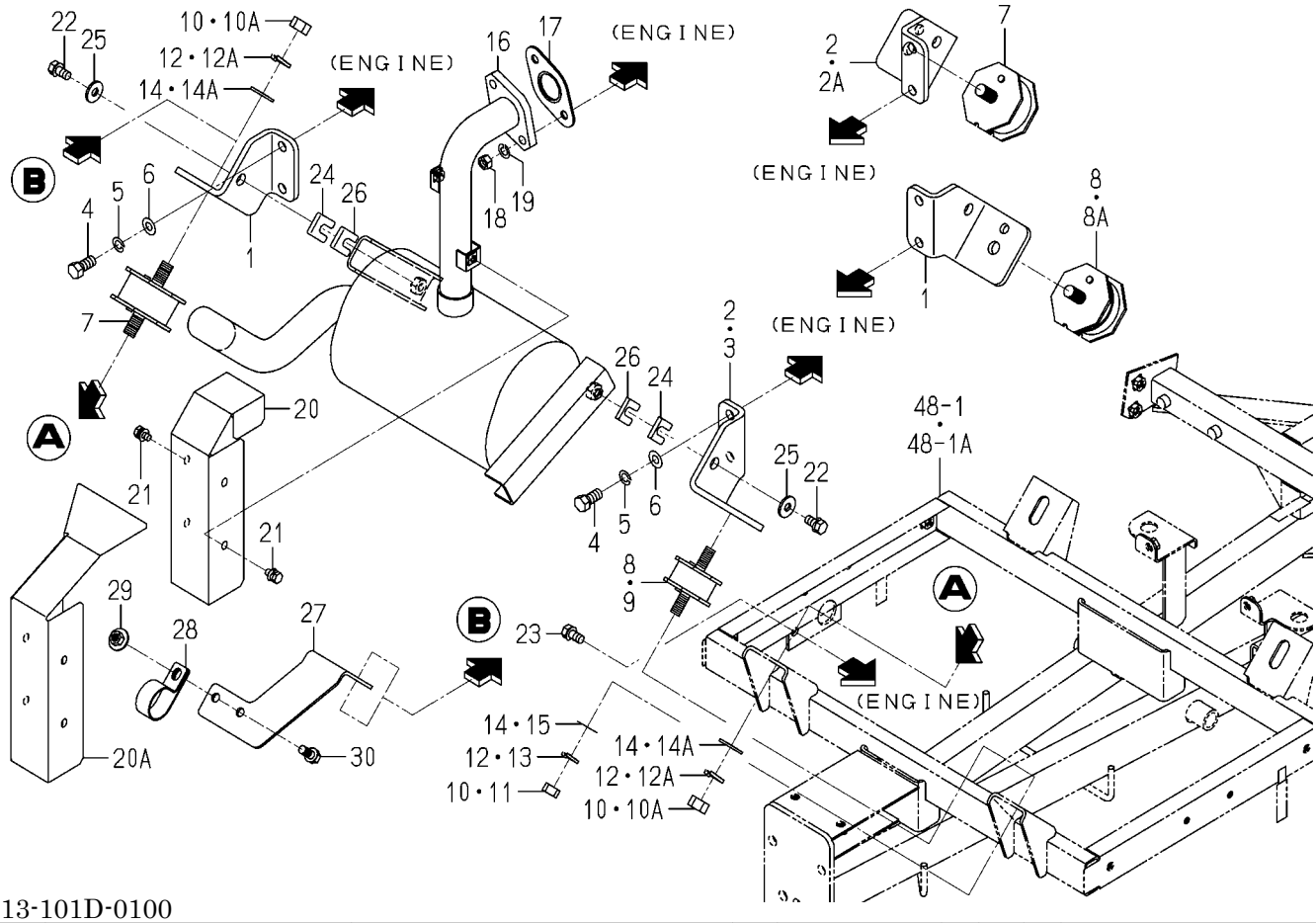

2213-101D-0100

KEY	PART CODE	DESCRIPTION	SPC	TYPE OF MODEL PZ80E16		ITC	COL	GRP	REMARKS
1	2213-101-001-10	BRACKET/ENGINE/A	*	2					
2	2213-101-002-10	BRACKET/ENGINE/B	*	2 -101046					
2A	2213-101-002-10	BRACKET/ENGINE/B	*	1 101047-					
3	2213-101-017-00	BRACKET/ENGINE/C	*	1 101047-					
4	V203-461-002-20	BOLT	*	8					
5	V401-160-010-00	WASHER,SP/M10	*	8					
6	V411-260-010-00	WASHER/M10	*	8					
7	3623-150-003-10	INSULATOR/MOUNT/LH	*	2					
8	3656-302-009-10	INSULATOR/MOUNT/34	*	2 -101046					
8A	3656-302-009-10	INSULATOR/MOUNT/34	*	1 101047-					
9	3623-150-004-10	INSULATOR/MOUNT/RH	*	1 101047-					
10	V304-260-012-00	NUT/M12	*	8 -101046					
10A	V304-260-012-00	NUT/M12	*	6 101047-					
11	V304-260-010-00	NUT	*	2 101047-					
12	V401-160-012-00	WASHER,SP/M12	*	8 -101046					
12A	V401-160-012-00	WASHER,SP/M12	*	6 101047-					
13	V401-160-010-00	WASHER,SP/M10	*	2 101047-					
14	V411-260-012-00	WASHER /M12	*	8 -101046					
14A	V411-260-012-00	WASHER /M12	*	6 101047-					
15	V411-260-010-00	WASHER/M10	*	2 101047-					
16	2213-101-500-00	MUFFLER COMP	*	1					
17	3659-301-001-00	GASKET	*	1					
18	V304-700-008-00	NUT	*	2					
19	V401-700-008-00	WASHER/LOCK	*	2					
20	2213-101-007-10	COVER/EXHAUST	*	1 -102200					
20A	2220-101-003-00	COVER/EXHAUST/PZV8	*	1 102201-					
21	V210-360-601-20	BOLT,SEMS	*	2					
22	V211-260-802-00	BOLT/S	*	2					
23	V211-260-801-60	BOLT,SEMS (S) M8X16	*	1					
24	2213-101-015-10	SHIM/MUFFLER	*	2					

FIG. 3 BRACKET(ENGINE)SYSTEM(D TYPE)

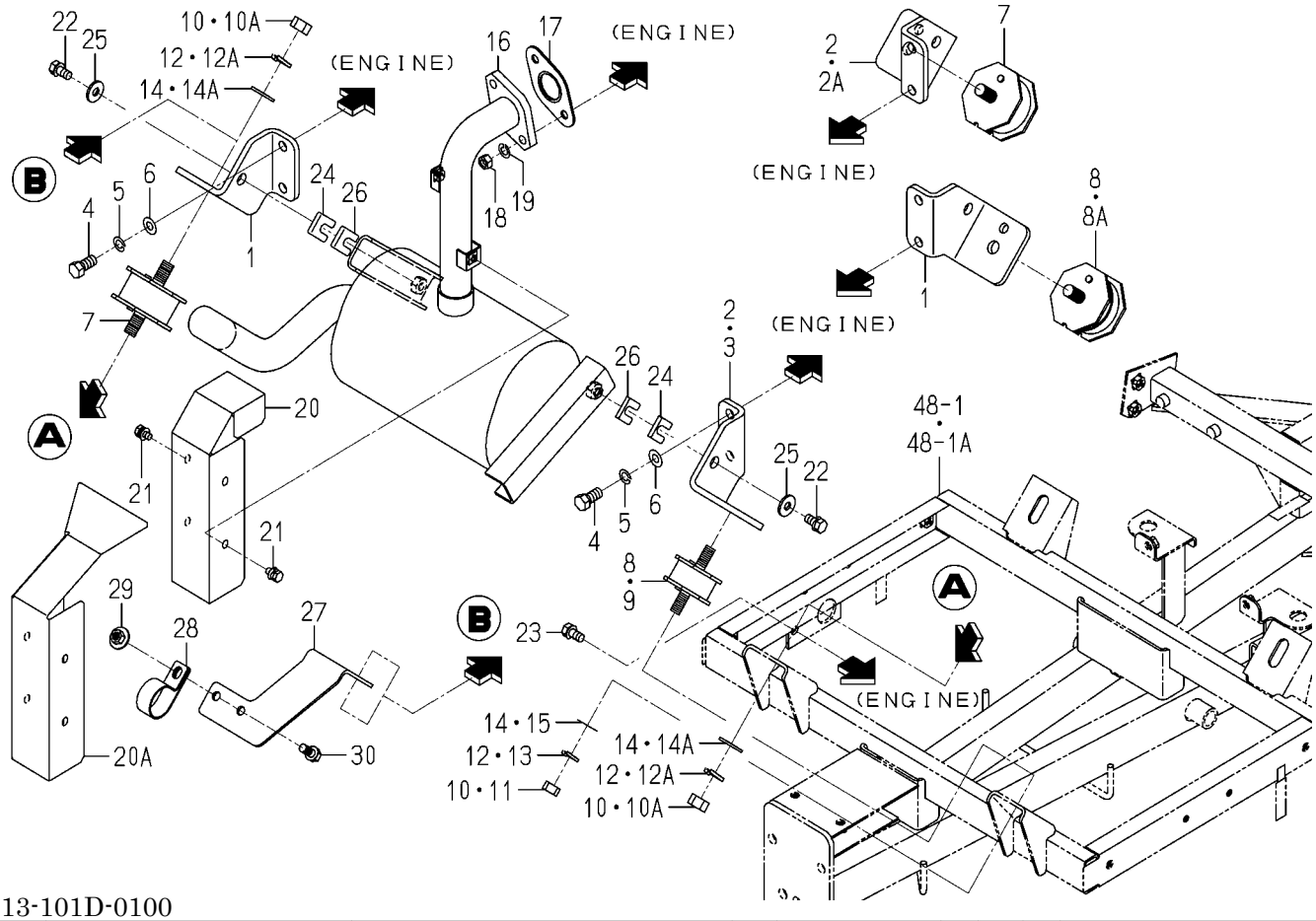

2213-101D-0100

KEY	PART CODE	DESCRIPTION	SPC	TYPE OF MODEL PZ80E16		ITC	COL	GRP	REMARKS
25	4106-102-028-00	WASHER	*	2					
26	2213-101-016-00	SHIM/MUFFLER	*	2 100001-					
27	2213-101-023-00	STAY/MUFFLER	*	1					
28	2213-101-026-00	CLAMP/32	*	1					
29	V363-260-008-00	NUT/WASHER	*	1					
30	V211-260-802-00	BOLT/S	*	1					

FIG. 4 BOLT(SET)¤COVER(MUFFLER¤RADIATOR) &LABEL(MODEL/ENGINE)SYSTEM(G TYPE)

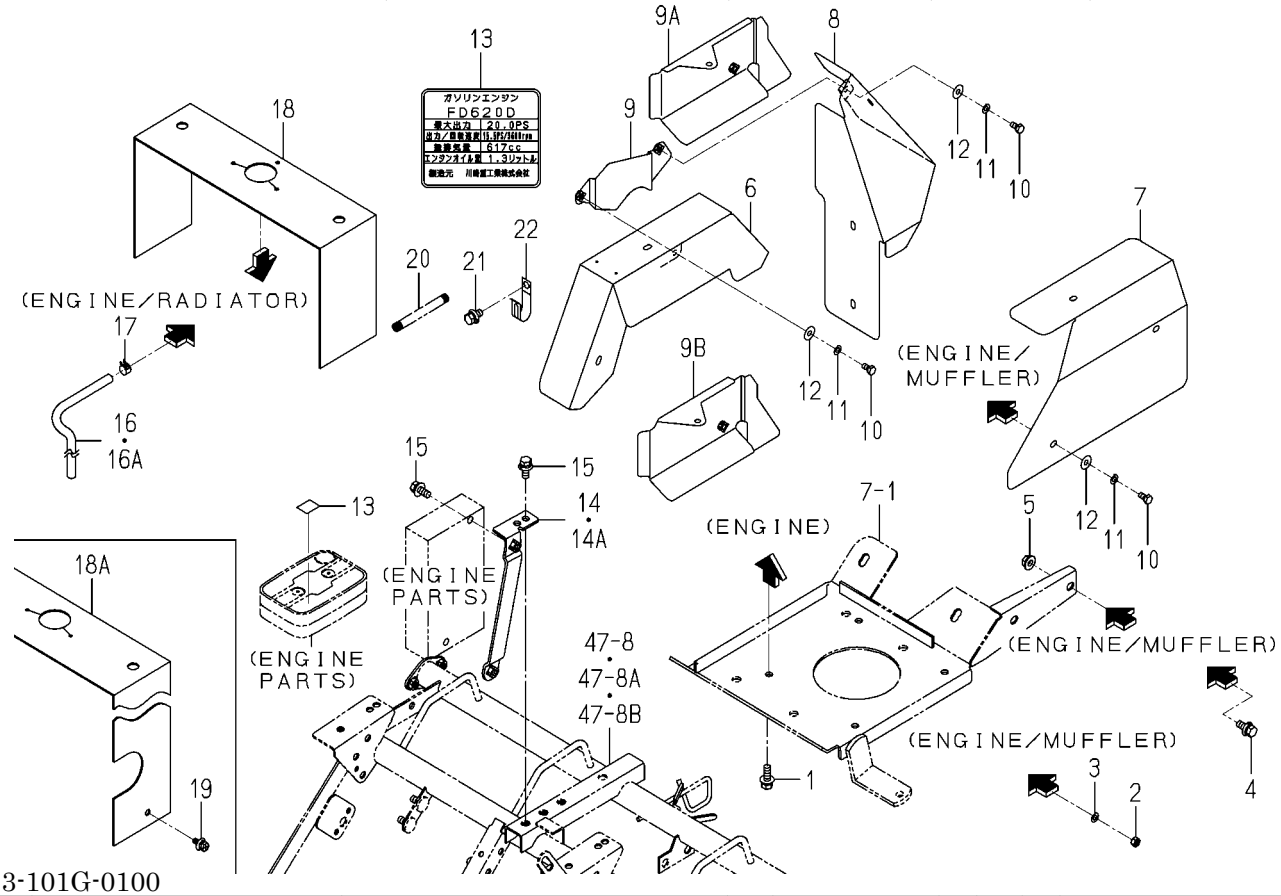

2213-101G-0100

KEY	PART CODE	DESCRIPTION	SPC	TYPE OF MODEL PZ80E16		ITC	COL	GRP	REMARKS
1	V211-360-802-50	BOLT/SP	*	4					
2	V301-700-006-00	NUT	*	4					
3	V401-700-006-00	WASHER/LOCK	*	4					
4	V211-360-802-00	BOLT/SP	*	4					
5	V362-260-008-00	NUT/WASHER	*	2					
6	2213-101-250-00	COVER/EXHAUST/F COMP	*	1					
7	2204-101-004-10	COVER/MUFFLER	*	1					
8	2204-101-001-20	COVER/EXT	*	1					
9	2204-101-390-00	COVER/MUFFLER/G	*	1 -101155					
9A	2204-101-390-10	COVER/MUFFLER/G	*	1 -102399		1			
9B	2204-101-390-20	COVER/MUFFLER/G COMP	*	1 102400-		1			
10	V200-700-601-20	BOLT	*	9					
11	V401-700-006-00	WASHER/LOCK	*	9					
12	3560-503-302-00	WASHER,WIRE TENSION	*	9					
13	2200-911-004-00	LABEL/ENGINE	*	1					
14	2186-101-320-00	STAY,RESERVE TANK	*	1 -100972					
14A	2186-101-320-10	STAY/RESERVE TANK	*	1 100973-		1			
15	V211-360-802-00	BOLT/SP	*	3					
16	2186-101-503-00	HOSE/650	*	1 -101696					
16A	2186-101-503-10	HOSE/680	*	1 101697-		1			
17	J062-111-120-00	CLIP/HOSE/11.1-12	*	1					
18	2213-102-031-00	COVER/RADIATOR/UPPER	*	1 -101649					
18A	2213-102-031-10	COVER/RADIATOR/UPPER	*	1 101650-		1			
19	2144-501-011-10	BOLT/M6X16X16	*	2 101650-					
20	2213-101-027-00	CORRUGATED TUBE/07X0	*	1 100001-					
21	V211-260-801-60	BOLT,SEMS (S) M8X16	*	1 100001-					
22	1425-621-004-00	HOLDER/JE/9-9	*	1 100001-					

FIG. 5 RADIATOR SYSTEM(D TYPE)

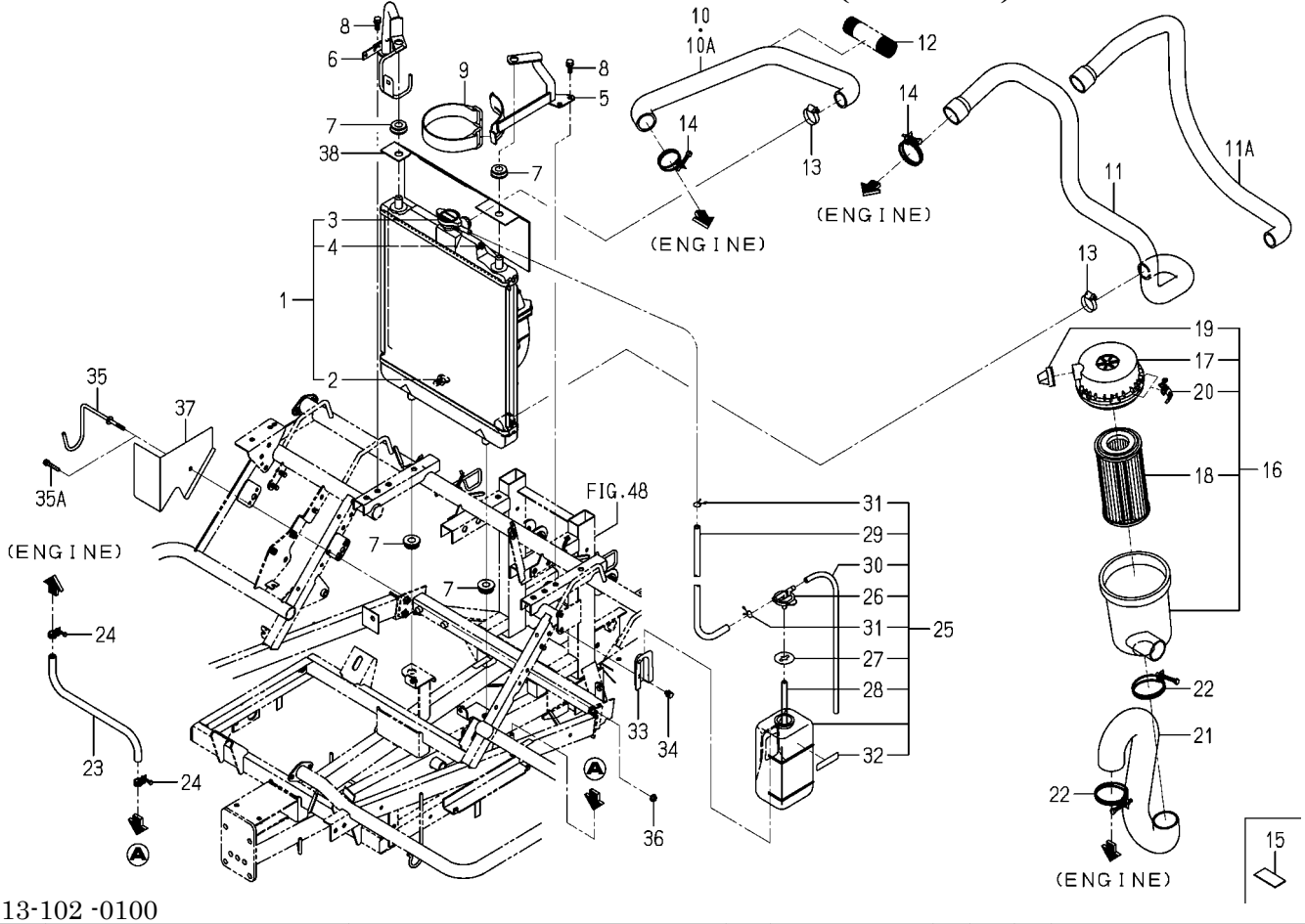

2213-102 -0100

KEY	PART CODE	DESCRIPTION	SPC	TYPE OF MODEL PZ80E16		ITC	COL	GRP	REMARKS
1	2213-102-400-00	RADIATOR ASSY	*	1					
2	2213-102-402-00	COCK ASSY	*	1					
3	2213-102-403-00	PRESSURECAP	*	1					
4	2213-102-404-00	FLANGEBOLT	*	2					
5	2213-103-200-20	STAY/RADIATOR/L COMP	*	1					
6	2213-103-210-10	STAY/RADIATOR/R COMP	*	1					
7	1719-730-002-00	GROMMET/15X17X05	*	4					
8	V211-260-802-00	BOLT/S	*	4					
9	3640-260-200-30	BATTERYSTAY COMP	*	1					
10	2213-101-004-00	HOSE/RADIATOR/UPPER	*	1 -102399					
10A	2213-101-004-10	HOSE/RADIATOR/UPPER	*	1 102400-		1			
11	2213-101-005-00	HOSE/RADIATOR/ROWER	*	1 -102200					
11A	2213-101-005-20	HOSE/RADIATOR/ROWER	*	1 102201-		1			
12	2213-102-002-00	CORRUGATETUBE/28X120	*	1					
13	J061-123-035-00	CLAMP/WORM/23-35	*	2					
14	J061-236-044-00	CLAMP/WIRE/36-44	*	2					
15	2188-105-005-00	PLATE/30X60X02	*	1 -102260					
16	1728-104-210-00	CLEANER/AIR ASSY	*	1					
17	1675-104-211-00	COVER ASSY	*	1					
18	1675-104-213-00	ELEMENT ASSY	*	1					
19	1544-104-205-00	VALVE	*	1					
20	1650-104-201-00	CLIP	*	2					
21	2213-101-006-00	HOSE/AIRCLEANER	*	1					
22	J061-249-060-00	CLAMP/WIRE/49-60	*	2					
23	2213-102-005-00	HOSE/390	*	1					
24	J061-210-015-00	CLAMP/WIRE/10-15	*	2					
25	3805-301-320-00	TANK,RESERVE	*	1					
26	6221-408-008-00	CAP	*	1					
27	6221-408-009-00	PACKING	*	1					
28	6221-408-010-00	HOSE/RUBBER	*	1					

FIG. 5 RADIATOR SYSTEM(D TYPE)

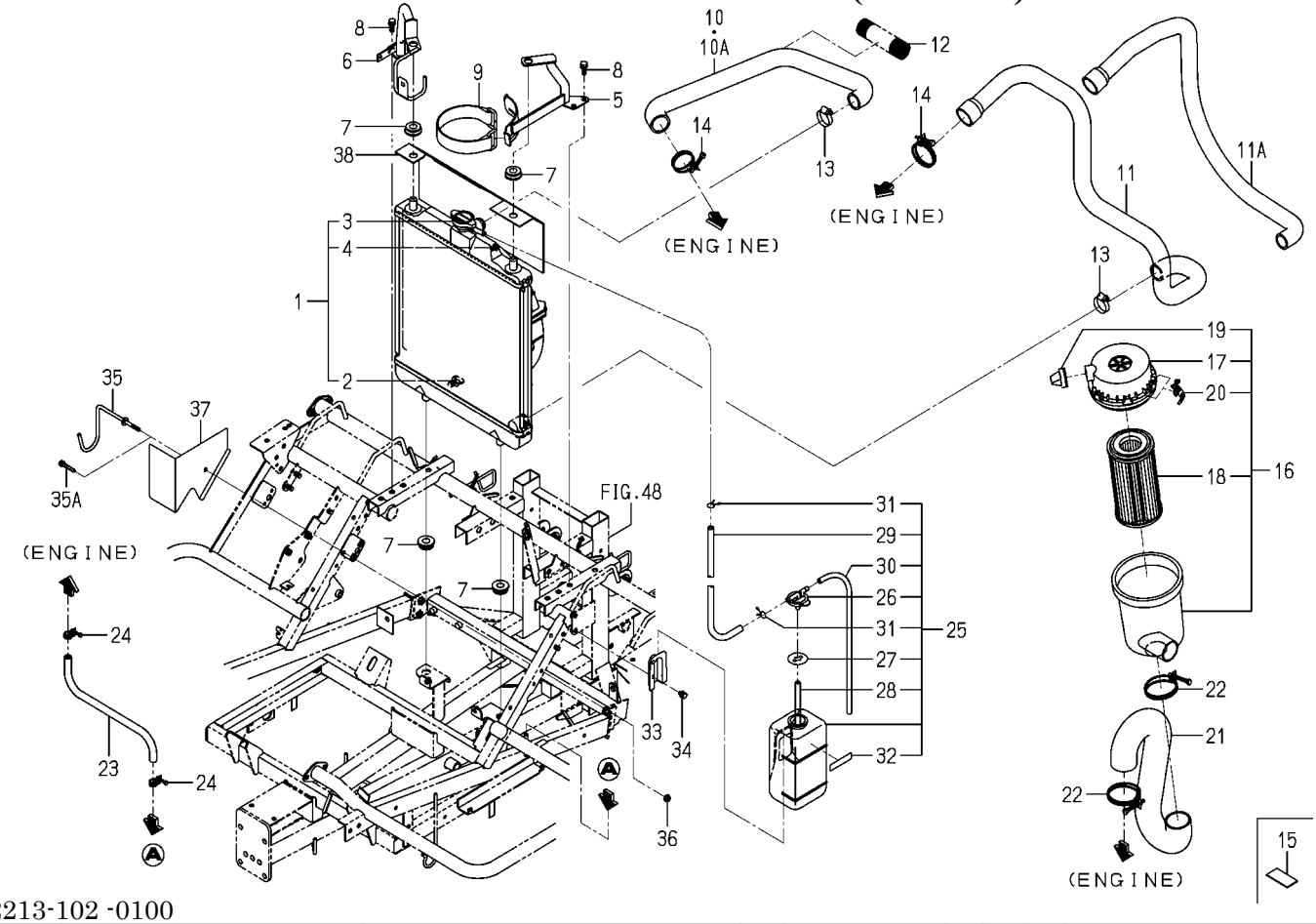

2213-102 -0100

KEY	PART CODE	DESCRIPTION	SPC	TYPE OF MODEL PZ80E16		ITC	COL	GRP	REMARKS
29	3805-301-321-00	HOSE/RUBBER	*	1					
30	6221-408-011-00	PIPE	*	1					
31	6221-408-013-00	CLAMP	*	2					
32	6221-408-007-00	PLATE/CAUTION	*	1					
33	6221-408-003-00	BRACKET/RESERVETANK	*	1					
34	V210-360-601-20	BOLT,SEMS	*	2					
35	2213-103-220-00	GUIDE/HOSE/RADIATOR	*	1 -102200					
35A	V210-260-603-50	BOLT/S	*	1 102201-					
36	V360-260-006-00	NUT/M6	*	1					
37	2213-103-001-10	COVER/AIRCLEANER	*	1					
38	2213-102-052-00	COVER/RADIATOR/UPPER	*	1 102201-					

FIG. 6 RADIATOR SYSTEM(G TYPE)

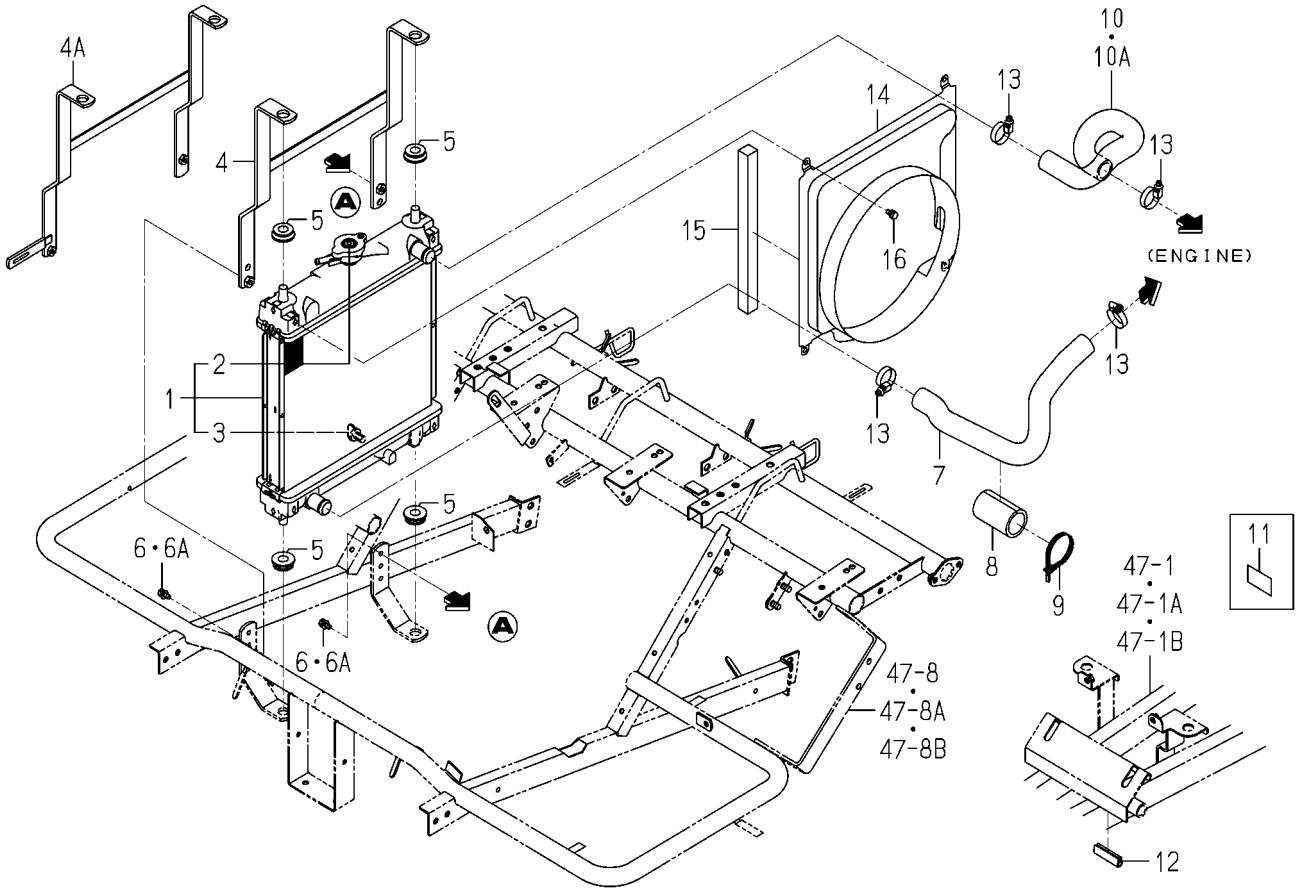

2213-102G-0100

KEY	PART CODE	DESCRIPTION	SPC	TYPE OF MODEL PZ80E16		ITC	COL	GRP	REMARKS
1	2213-102-300-00	RADIATOR/G ASSY	*	1					
2	1650-102-202-10	CAP	*	1					
3	3822-330-601-00	COCK	*	1					
4	2213-102-240-00	STAY/RADIATOR/G COMP	*	1 -101074					
4A	2213-102-240-10	STAY/RADIATOR/G COMP	*	1 101075-		1			
5	1719-730-002-00	GROMMET/15X17X05	*	4					
6	V210-260-601-60	BOLT/S	*	2 -101046					
6A	V210-360-602-00	BOLT/SP	*	2 101047-					
7	2213-101-601-00	HOSE/COOLING/LOWER/6	*	1					
8	2162-111-009-00	TUBE	*	1					
9	1421-621-038-00	BAND,WIRE/170	*	1					
10	2213-101-602-00	HOSE/COOLING/UPPER/6	*	1 -102399					
10A	2213-101-602-10	HOSE/COOLING/UPPER/6	*	1 102400-		1			
11	4132-303-003-00	PLATE/RUBBER/30X50X0	*	1 101745-					
12	3650-201-006-00	PROTECTOR,ENGINE	*	1 101643-					
13	J061-120-032-00	CLAMP/WORM/20-32	*	4					
14	2213-102-001-10	SHROUD/FD620	*	1					
15	1716-782-005-00	INSULATOR/20X280	*	2					
16	V210-360-601-20	BOLT,SEMS	*	4					

FIG. 7 MOUNT(ENGINE)SYSTEM(G TYPE)

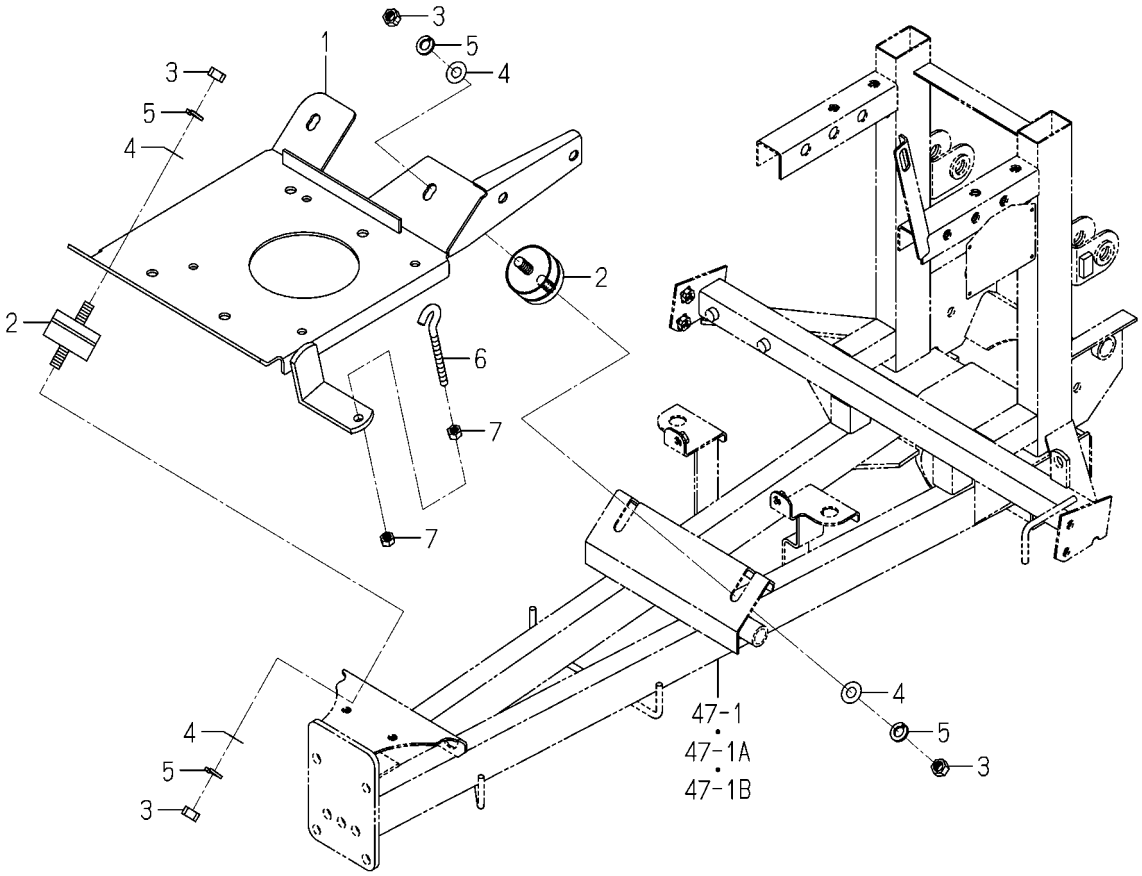

2204-103K-0100

KEY	PART CODE	DESCRIPTION	SPC	TYPE OF MODEL PZ80E16		ITC	COL	GRP	REMARKS
1	2204-103-350-00	BASE/ENGINE/G/K COMP	*	1					
2	2161-103-001-00	INSULATOR	*	4					
3	V304-260-010-00	NUT	*	8					
4	V411-260-010-00	WASHER/M10	*	8					
5	V401-160-010-00	WASHER,SP/M10	*	8					
6	2142-407-002-10	ROD,ADJUST/90	*	1					
7	V304-260-008-00	NUT	*	2					

FIG. 8 PULLEY(ENGINE)SYSTEM(D TYPE)

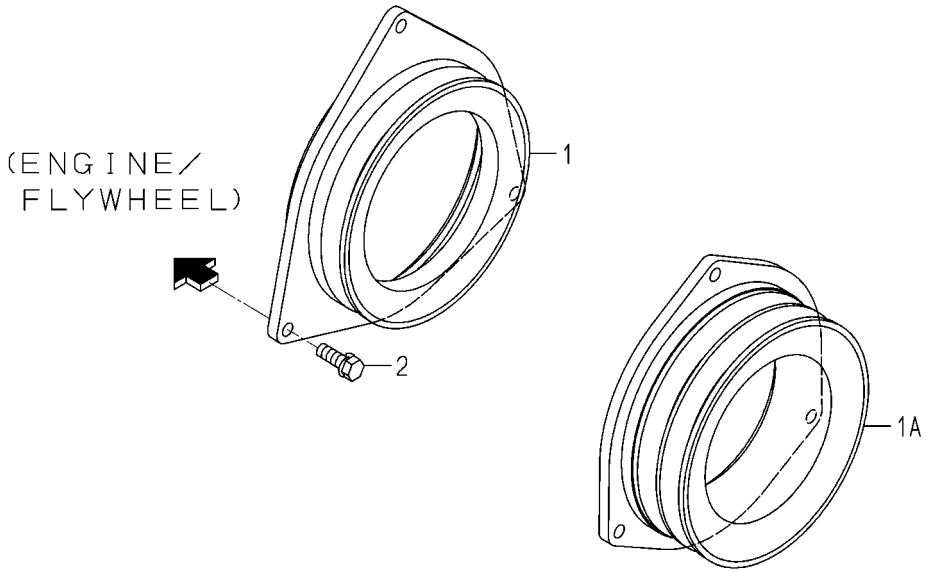

2213-105D-0100

KEY	PART CODE	DESCRIPTION	SPC	TYPE OF MODEL PZ80E16		ITC	COL	GRP	REMARKS
1	2213-105-001-00	PULLEY/VB151	*	1 -101046					
1A	2213-105-011-00	PULLEY/VB151/VB151	*	1 101047-					
2	V211-260-802-50	BOLT/S	*	3					

FIG. 9 PULLEY(ENGINE)SYSTEM(G TYPE)

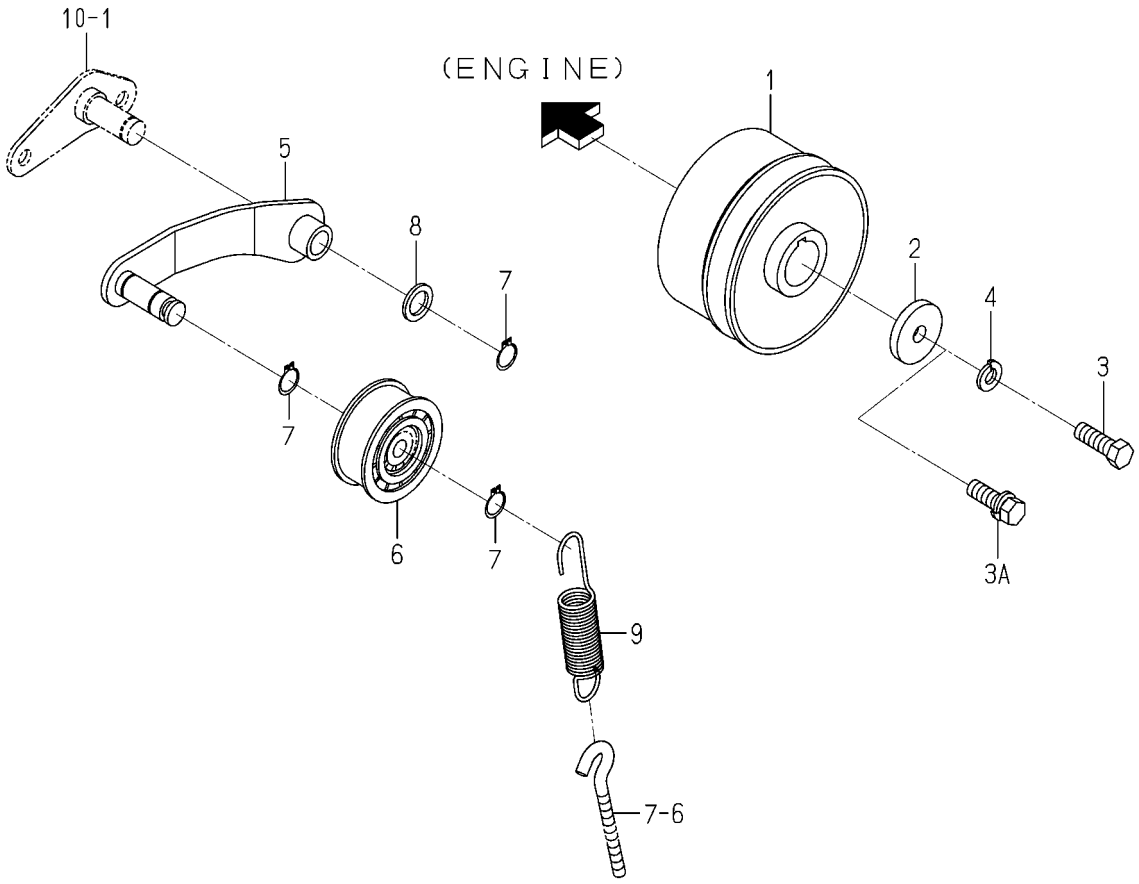

2213-105G-0100

KEY	PART CODE	DESCRIPTION	SPC	TYPE OF MODEL PZ80E16		ITC	COL	GRP	REMARKS
1	2213-105-005-00	PULLEY/VB111	*	1					
2	2142-101-005-00	WASHER	*	1					
3	2139-221-003-00	BOLT M10X30	*	1 -102262					
3A	2204-323-011-00	BOLT/SEAL/M10X30/S	*	1 102263-					
4	V401-160-010-00	WASHER,SP/M10	*	1 -102262					
5	2204-105-240-20	ARM/TENSION/FD COMP	*	1					
6	3621-211-002-00	PULLEY,TENSION	*	1					
7	V704-140-015-00	RING,SNAP/15 C	*	3					
8	2144-337-007-00	WASHER	*	1					
9	2194-106-002-00	SPRING/HE110	*	1					

FIG. 10 STAY(ARM/TENSION)SYSTEM(G TYPE)

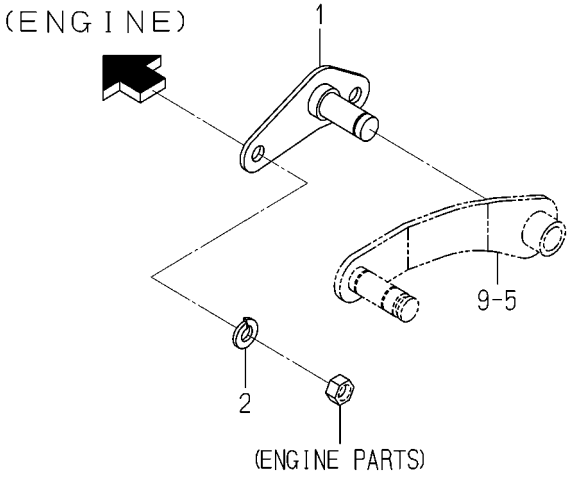

2204-106G-0100

KEY	PART CODE	DESCRIPTION	SPC	TYPE OF MODEL PZ80E16		ITC	COL	GRP	REMARKS
1	2204-106-210-00	STAY	*	1					
2	V401-160-010-00	WASHER,SP/M10	*	2					

FIG. 11 TANK(FUEL)SYSTEM(D TYPE)

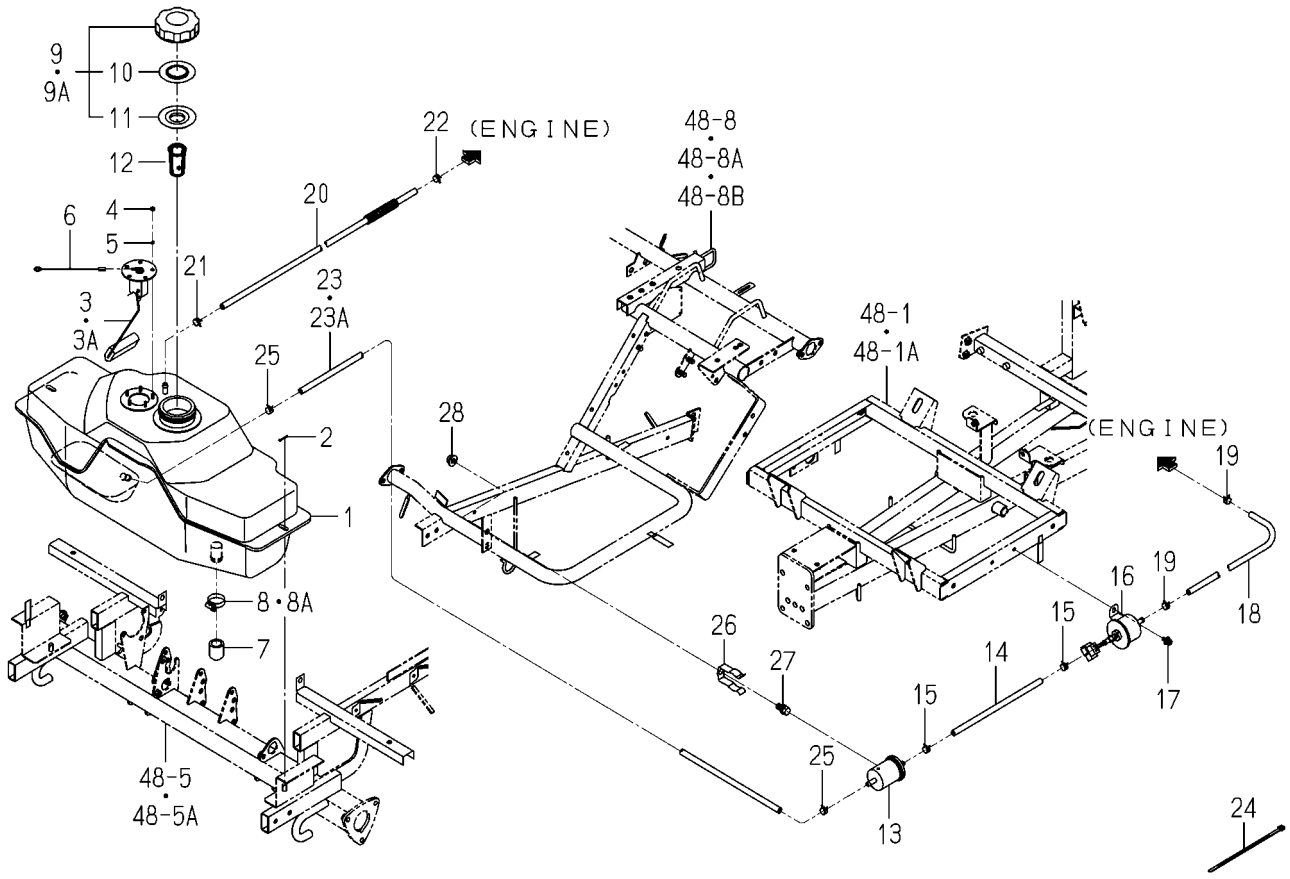

2213-111D-0100

KEY	PART CODE	DESCRIPTION	SPC	TYPE OF MODEL PZ80E16		ITC	COL	GRP	REMARKS
1	2213-111-008-00	TANK/FUEL/PZ/8	*	1					
2	3908-170-020-00	PIN/SNAP/08	*	2					
3	2213-111-300-00	GAUGE/FUEL10-57 ASSY	*	1 -102285					
3A	2213-111-300-10	GAUGE/FUEL/0-57 ASSY	*	1 102286-		1			
4	V301-260-004-00	NUT/M4	*	5					
5	V401-160-004-00	WASHER,SP/M 4	*	5					
6	2204-111-006-10	HARNESS/SWGND/5	*	1					
7	2213-111-012-00	CAP/20/PZ	*	1					
8	J061-123-035-00	CLAMP/WORM/23-35	*	1 -102211					
8A	J061-120-032-00	CLAMP/WORM/20-32	*	1 102212-					
9	1729-111-280-10	CAP/TANK/NONLEA ASSY	*	1 -102349					
9A	1729-111-280-20	CAP/TANK/NONLEA ASSY	*	1 102350-		1			
10	1729-111-283-00	PLATE	*	1					
11	1729-111-284-00	PACKING	*	1					
12	1729-111-006-10	FILTER/FUEL	*	1					
13	3830-311-210-00	FILTER,FUEL	*	1					
14	2213-111-011-00	HOSE/07X11X300	*	1					
15	J062-119-126-00	CLIP/HOSE/11.9-12.6	*	2					
16	3829-311-200-00	PUMP/FUEL ASSY	*	1					
17	2144-501-011-10	BOLT/M6X16X16	*	1					
18	2213-111-009-00	HOSE/07X11X750	*	1					
19	J062-119-126-00	CLIP/HOSE/11.9-12.6	*	2					
20	2213-111-002-10	HOSE/07X11X1750	*	1					
21	J062-119-126-00	CLIP/HOSE/11.9-12.6	*	1					
22	J062-111-120-00	CLIP/HOSE/11.1-12	*	1					
23	2213-111-021-00	HOSE/07X11X1750/20	*	1 -101649					
23A	2213-111-021-10	HOSE/07X11X1750/20	*	1 101650-		1			
24	1376-402-003-00	BAND,WIRE/140	*	1 101075-					
25	J062-119-126-00	CLIP/HOSE/11.9-12.6	*	2					
26	6219-755-001-00	HOLDER(FUEL FILTER)	*	1					

FIG. 11 TANK(FUEL)SYSTEM(D TYPE)

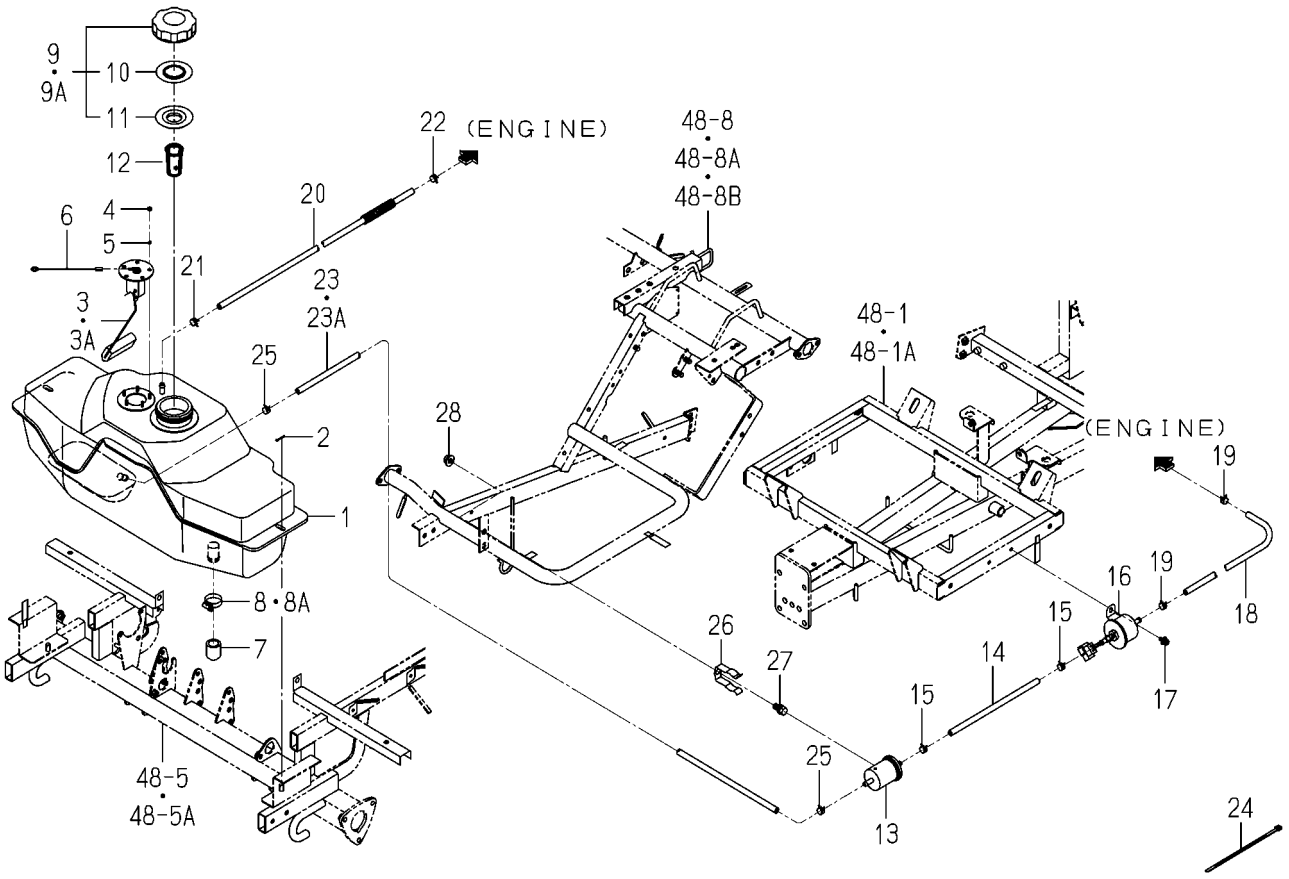

2213-111D-0100

KEY	PART CODE	DESCRIPTION	SPC	TYPE OF MODEL PZ80E16		ITC	COL	GRP	REMARKS
27	V211-360-802-00	BOLT/SP	*	1 100001-					
28	V362-260-008-00	NUT/WASHER	*	1 100001-					

FIG. 12 TANK(FUEL)SYSTEM(G TYPE)

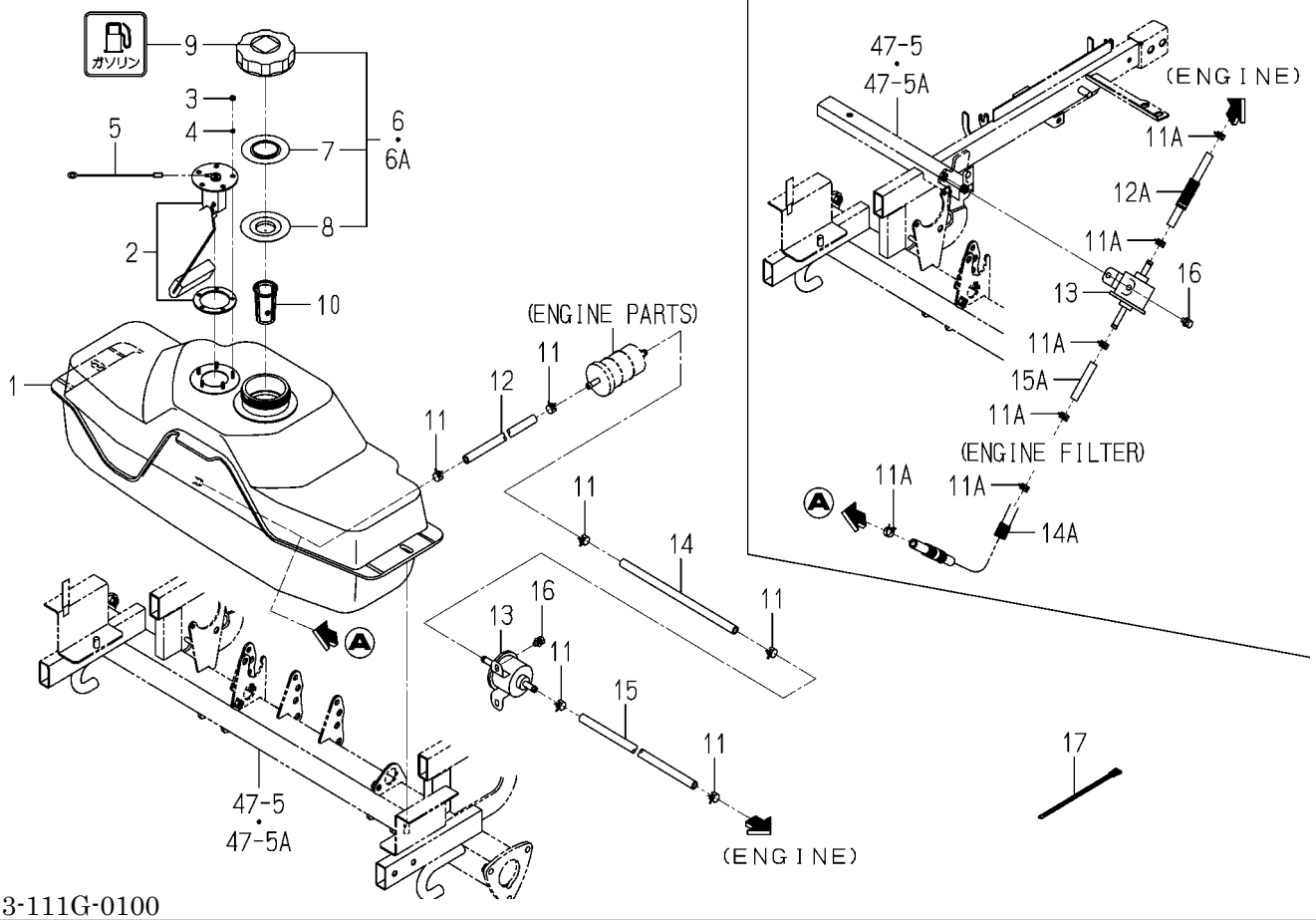

2213-111G-0100

KEY	PART CODE	DESCRIPTION	SPC	TYPE OF MODEL PZ80E16		ITC	COL	GRP	REMARKS
1	2204-111-002-10	TANK/FUEL	*	1					
2	2213-111-300-10	GAUGE/FUEL/0-57 ASSY	*	1 100001-					
3	V301-260-004-00	NUT/M4	*	5					
4	V401-160-004-00	WASHER,SP/M 4	*	5					
5	2204-111-006-10	HARNESS/SWGND/5	*	1					
6	1729-111-280-10	CAP/TANK/NONLEA ASSY	*	1 -102349					
6A	1729-111-280-20	CAP/TANK/NONLEA ASSY	*	1 102350-		1			
7	1729-111-283-00	PLATE	*	1					
8	1729-111-284-00	PACKING	*	1					
9	2500-907-017-00	LABEL/PETROL	*	1					
10	1729-111-006-10	FILTER/FUEL	*	1					
11	J062-119-126-00	CLIP/HOSE/11.9-12.6	*	6 -101649					
11A	J062-138-148-00	CLIP/HOSE/13.8-14.8	*	6 101650-					
12	2213-111-004-00	HOSE/FUEL/910	*	1 -101649					
12A	2213-111-004-20	HOSE/FUEL/780	*	1 101650-		1			
13	3829-311-200-00	PUMP/FUEL ASSY	*	1					
14	2204-111-005-20	HOSE/FUEL/240	*	1 -101649					
14A	2204-111-005-40	HOSE/FUEL/210	*	1 101650-		1			
15	2204-111-013-00	HOSE/FUEL/110	*	1 -101649					
15A	2213-111-023-00	HOSE/FUEL/060	*	1 101650-					
16	V210-360-601-20	BOLT,SEMS	*	2 100001-					
17	1421-621-038-00	BAND,WIRE/170	*	1 101650-					

FIG. 13 LEVER(HST)SYSTEM

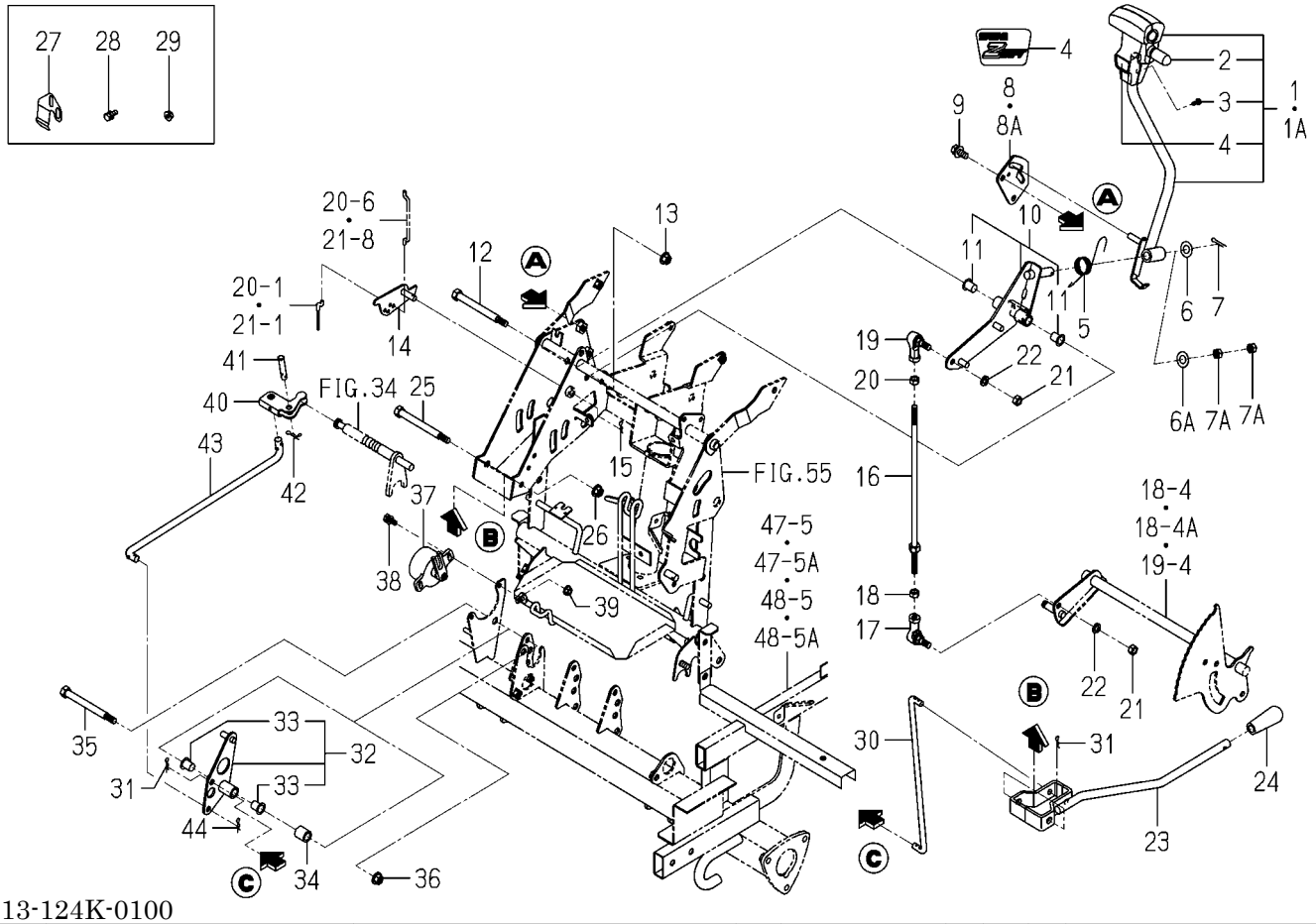

2213-124K-0100

KEY	PART CODE	DESCRIPTION	SPC	TYPE OF MODEL PZ80E16		ITC	COL	GRP	REMARKS
1	2204-124-400-10	LEVER/HST/E16 SET	*	1 -102349					
1A	2204-124-400-20	LEVER/HST/E16 SET	*	1 102350-		1			
2	2204-124-331-00	CAP/SWITCH	*	1					
3	V120-366-001-20	SCREW	*	2					
4	2204-916-014-00	ORNAMENT/ZSHIFT/K	*	1					
5	2204-124-008-00	SPRING/HT025	*	1					
6	V411-260-012-00	WASHER /M12	*	1 -101137					
6A	V411-260-008-00	WASHER,PL/M 8	*	1 101138-					
7	V500-162-502-00	PIN,SPLIT/2.5X20	*	1 -101137					
7A	V304-260-008-00	NUT	*	2 101138-					
8	2204-124-015-30	GUIDE/HST	*	1 -100964					
8A	2204-124-015-40	GUIDE/HST	*	1 100965-		1			
9	V211-360-802-00	BOLT/SP	*	2					
10	2213-124-380-00	CAM/HST/8	*	1					
11	1110-401-002-00	BUSH/F/10X12X15	*	2 100001-					
12	2204-331-002-00	PIN/10X108	*	1					
13	V362-260-008-00	NUT/WASHER	*	1					
14	2213-124-310-10	ARM/ACCELERATOR/8E	*	1					
15	3908-170-020-00	PIN/SNAP/08	*	1					
16	2204-124-220-00	ROD/HST/UP	*	1					
17	1560-695-021-00	JOINT BALL M08RH	*	1					
18	V304-260-008-00	NUT	*	1					
19	1560-695-022-00	JOINT BALL M08LH	*	1					
20	1560-132-007-30	NUT/M8	*	1					
21	V304-260-008-00	NUT	*	2					
22	V401-160-008-00	WASHER,SP/M 8	*	2					
23	2204-124-270-30	LEVER/CHANGE COMP	*	1 100001-		1			
24	3659-215-003-00	GRIP/11X60	*	1					
25	2204-331-002-00	PIN/10X108	*	1					
26	V362-260-008-00	NUT/WASHER	*	1					

FIG. 13 LEVER(HST)SYSTEM

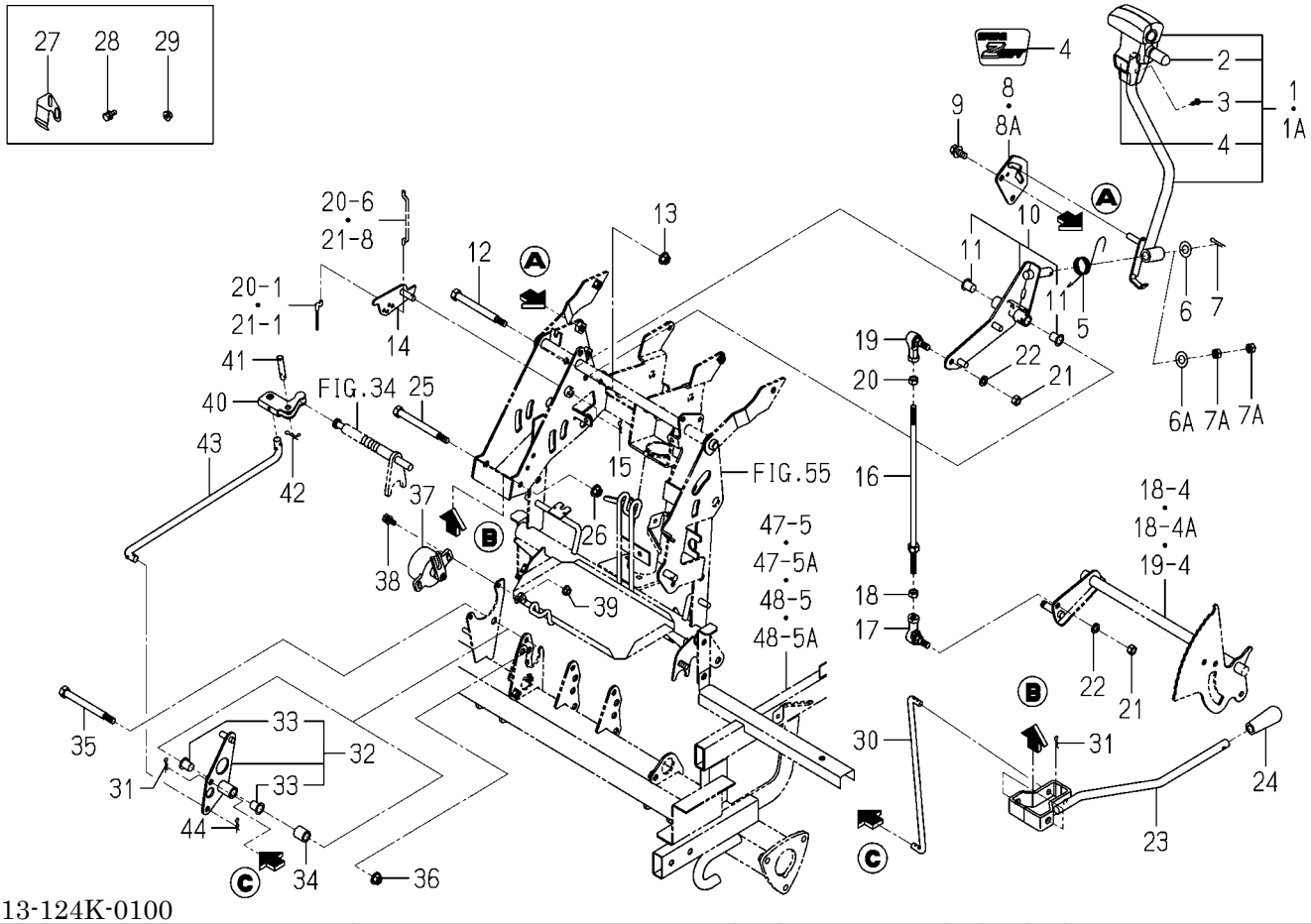

2213-124K-0100

KEY	PART CODE	DESCRIPTION	SPC	TYPE OF MODEL PZ80E16		ITC	COL	GRP	REMARKS
27	2213-124-006-00	STOPPER/CHENGE/B	*	1 -101649					
28	V210-360-601-60	BOLT(SP)/M6X16	*	2 -101649					
29	V360-260-006-00	NUT/M6	*	2 -101649					
30	2204-124-004-10	ROD/CHANGE/UPPER	*	1					
31	3908-170-020-00	PIN/SNAP/08	*	2					
32	2204-124-380-00	ARM,CHANGE/COUNTER	*	1					
33	1110-401-002-00	BUSH/F/10X12X15	*	2					
34	2213-124-001-00	HUB/12X17X18	*	1					
35	2204-331-002-00	PIN/10X108	*	1					
36	V362-260-008-00	NUT/WASHER	*	1					
37	2204-124-320-00	SENSOR	*	1					
38	V210-360-601-60	BOLT(SP)/M6X16	*	2					
39	V360-260-006-00	NUT/M6	*	2					
40	2204-124-003-10	SHIFTER/CHANGE	*	1					
41	2132-513-001-00	PIN	*	1					
42	2161-735-006-00	PIN	*	1					
43	2204-124-002-30	ROD/CHANGE/UNDER	*	1					
44	1305-241-001-00	PIN,HAIR	*	1					

FIG. 14 HST SYSTEM(G TYPE)(NO.102350-)

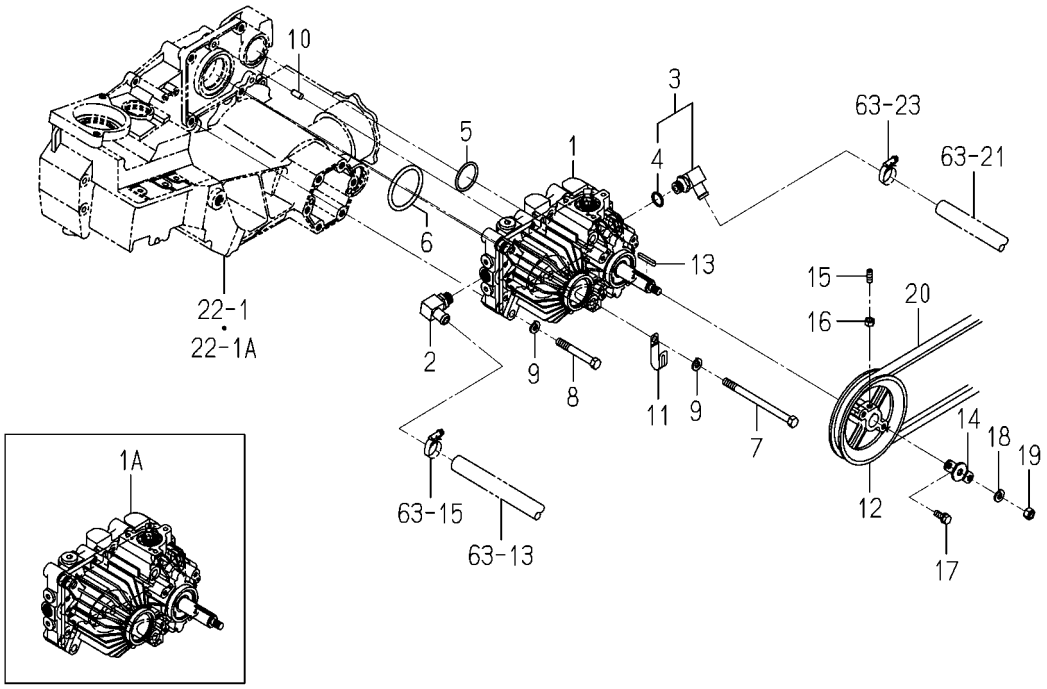

2213-131B-0100

KEY	PART CODE	DESCRIPTION	SPC	TYPE OF MODEL PZ80E16		ITC	COL	GRP	REMARKS
1	K510-019-000-00	HST/PZ/23 ASSY	*	1 -120400					FIG 192
1A	K510-019-000-10	HST/PZ/23 ASSY	*	1 120401-		1			FIG 192
2	2204-131-011-00	ADAPTER/G3/816 ASSY	*	1 102350-					
3	P103-521-007-00	ELBOW/SUCTION ASSY	*	1 102350-					
4	V720-112-401-80	O-RING/P18	*	1 102350-					
5	V720-103-503-90	O-RING/P39	*	1 102350-					
6	V721-103-106-00	O-RING/G60	*	1 102350-					
7	V201-261-014-00	BOLT/M10X140	*	2 102350-					
8	V201-261-007-50	BOLT/M10X75	*	2 102350-					
9	V401-160-010-00	WASHER,SP/M10	*	4 102350-					
10	V522-100-801-80	PIN	*	2 102350-					
11	3737-172-011-00	CLAMP,HARNESS	*	1 102350-					
12	2213-131-004-00	PULLEY/VB135/8G	*	1 102350-					
13	2178-631-013-00	KEY/05X05X35	*	1 102350-					
14	2190-131-008-00	PLATE/STOPPER/PULLEY	*	1 102350-					
15	2190-131-009-00	SCREW	*	1 102350-					
16	V304-260-008-00	NUT	*	1 102350-					
17	V211-260-802-00	BOLT/S	*	2 102350-					
18	V401-160-010-00	WASHER,SP/M10	*	1 102350-					
19	V334-260-010-00	NUT/M10	*	1 102350-					
20	2213-131-007-00	BELT/VB048	*	1 102350-					

FIG. 15 HST SYSTEM(D TYPE)(NO.102350-)

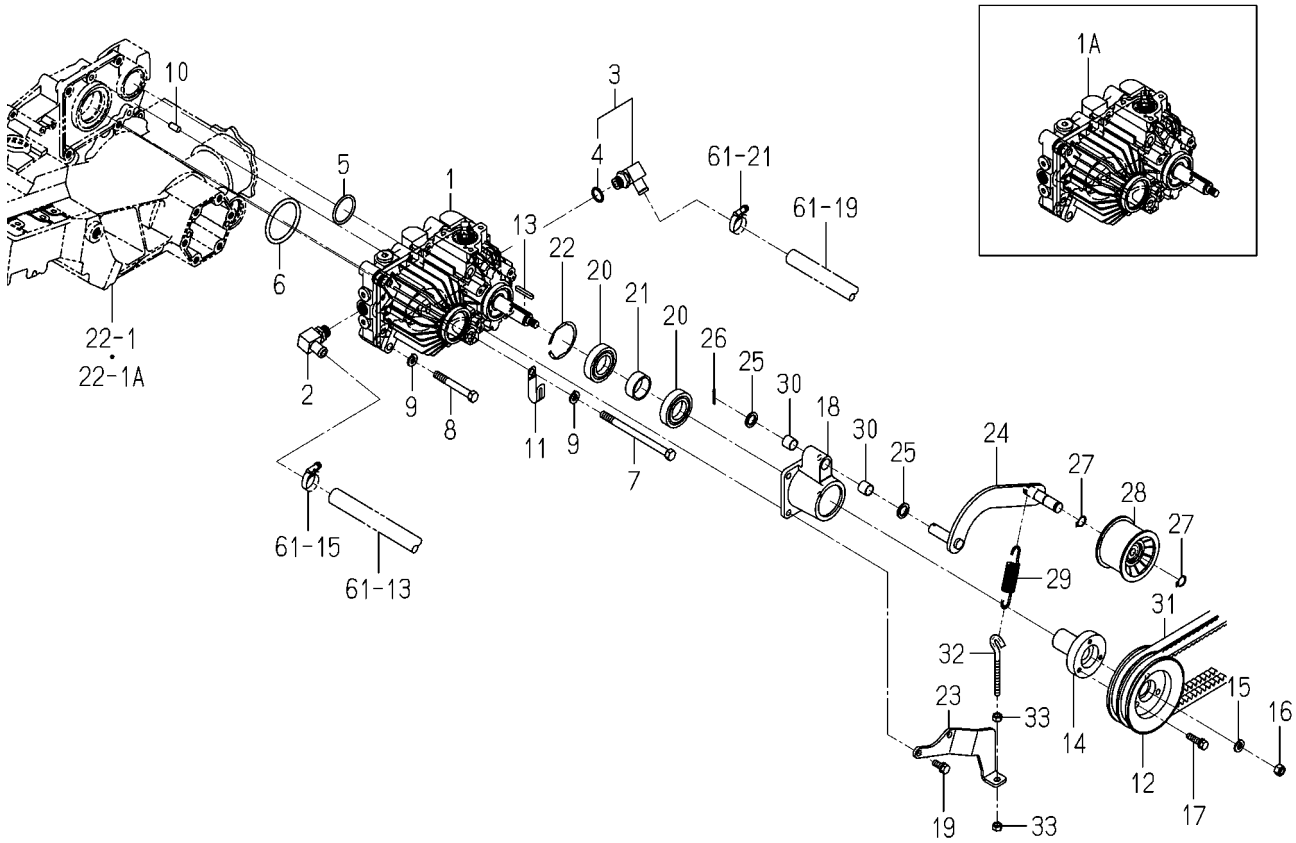

2213-131C-0100

KEY	PART CODE	DESCRIPTION	SPC	TYPE OF MODEL PZ80E16		ITC	COL	GRP	REMARKS
1	K510-019-000-00	HST/PZ/23 ASSY	*	1 -120400					FIG 192
1A	K510-019-000-10	HST/PZ/23 ASSY	*	1 120401-		1			FIG 192
2	2204-131-011-00	ADAPTER/G3/816 ASSY	*	1 102350-					
3	P103-521-007-00	ELBOW/SUCTION ASSY	*	1 102350-					
4	V720-112-401-80	O-RING/P18	*	1 102350-					
5	V720-103-503-90	O-RING/P39	*	1 102350-					
6	V721-103-106-00	O-RING/G60	*	1 102350-					
7	V201-261-014-00	BOLT/M10X140	*	2 102350-					
8	V201-261-007-50	BOLT/M10X75	*	2 102350-					
9	V401-160-010-00	WASHER,SP/M10	*	4 102350-					
10	V522-100-801-80	PIN	*	2 102350-					
11	3737-172-011-00	CLAMP,HARNESS	*	1 102350-					
12	2213-131-021-00	PULLEY/VB117/VB117	*	1 102350-					
13	2178-631-013-00	KEY/05X05X35	*	1 102350-					
14	2213-131-006-10	HUB/PULLEY	*	1 102350-					
15	V401-160-010-00	WASHER,SP/M10	*	1 102350-					
16	V334-260-010-00	NUT/M10	*	1 102350-					
17	V211-260-803-00	BOLT,SEMS	*	3 102350-					
18	2213-131-022-10	METAL/PULLEY/HST/W	*	1 102350-					
19	V211-260-802-50	BOLT/S	*	4 102350-					
20	V600-150-600-60	BEARING,RB/6006SS	*	2 102350-					
21	2213-131-009-00	COLLER/32X38X15	*	1 102350-					
22	V707-140-055-00	RING/SNAP	*	1 102350-					
23	2213-131-012-00	PLATE/TENSION/W	*	1 102350-					
24	2213-131-520-00	ARM/TENSION/W	*	1 102350-					
25	2144-337-007-00	WASHER	*	2 102350-					
26	V500-162-502-00	PIN,SPLIT/2.5X20	*	1 102350-					
27	V704-140-015-00	RING,SNAP/15 C	*	2 102350-					
28	3646-703-001-00	PULLEY,TENTION 70X47	*	1 102350-					
29	2188-105-004-00	SPRING/HE089	*	1 102350-					

FIG. 15 HST SYSTEM(D TYPE)(NO.102350-)

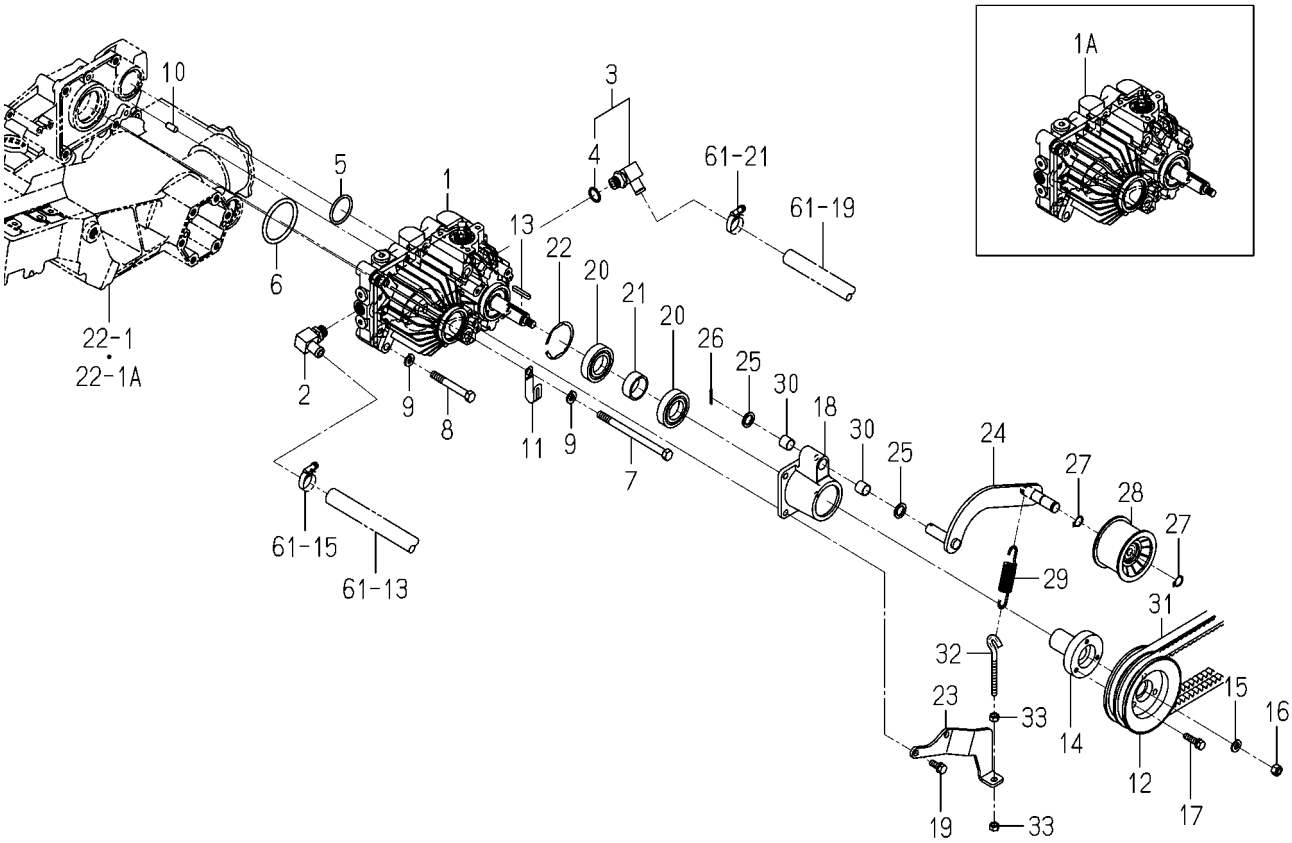

2213-131C-0100

KEY	PART CODE	DESCRIPTION	SPC	TYPE OF MODEL PZ80E16		ITC	COL	GRP	REMARKS
30	3650-106-006-00	BUSH/15X17X15	*	2 102350-					
31	2213-131-400-00	BELT/VB052/HP-1 SET	*	1 102350-					
32	2142-407-002-10	ROD,ADJUST/90	*	1 102350-					
33	V304-260-008-00	NUT	*	2 102350-					

FIG. 16 HST SYSTEM(G TYPE)(NO.100001-102349)

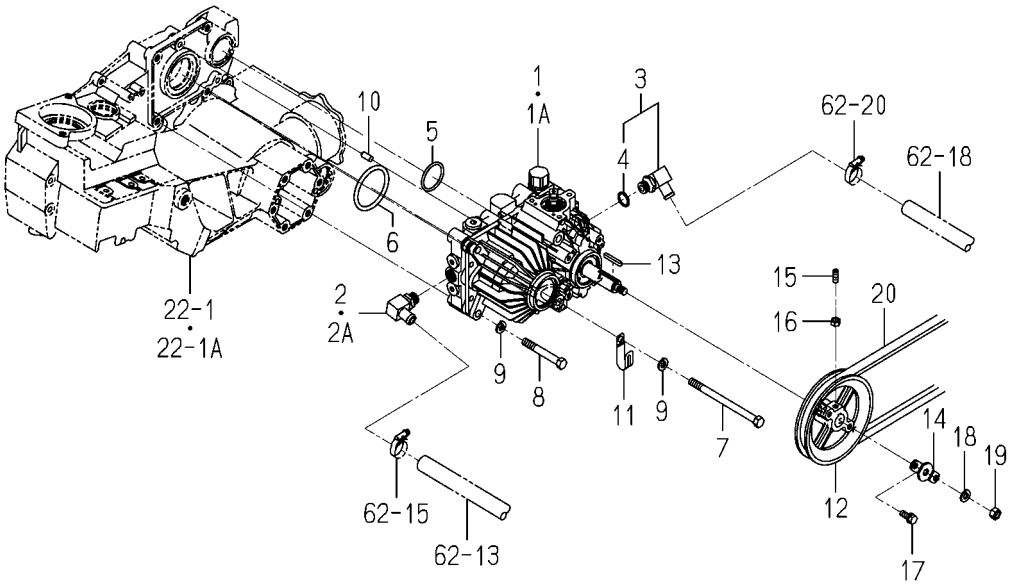

2213-131G-0100

KEY	PART CODE	DESCRIPTION	SPC	TYPE OF MODEL PZ80E16		ITC	COL	GRP	REMARKS
1	K510-013-000-20	HST/PZ/21 ASSY	*	1 -102260					FIG 191
1A	K510-013-000-30	HST/PZ/21 ASSY	*	1 -102349		1			FIG 191
2	2204-131-011-00	ADAPTER/G3/816 ASSY	*	1 -100472					
2A	2204-131-011-00	ADAPTER/G3/816 ASSY	*	1 -102349					
3	P103-521-007-00	ELBOW/SUCTION ASSY	*	1 -102349					
4	V720-112-401-80	O-RING/P18	*	1 -102349					
5	V720-103-503-90	O-RING/P39	*	1 -102349					
6	V721-103-106-00	O-RING/G60	*	1 -102349					
7	V201-261-014-00	BOLT/M10X140	*	2 -102349					
8	V201-261-007-50	BOLT/M10X75	*	2 -102349					
9	V401-160-010-00	WASHER,SP/M10	*	4 -102349					
10	V522-100-801-80	PIN	*	2 -102349					
11	3737-172-011-00	CLAMP,HARNESS	*	1 -102349					
12	2213-131-004-00	PULLEY/VB135/8G	*	1 -102349					
13	2178-631-013-00	KEY/05X05X35	*	1 -102349					
14	2190-131-008-00	PLATE/STOPPER/PULLEY	*	1 -102349					
15	2190-131-009-00	SCREW	*	1 -102349					
16	V304-260-008-00	NUT	*	1 -102349					
17	V211-260-802-00	BOLT/S	*	2 -102349					
18	V401-160-010-00	WASHER,SP/M10	*	1 -102349					
19	V334-260-010-00	NUT/M10	*	1 -102349					
20	2213-131-007-00	BELT/VB048	*	1 -102349					

FIG. 17 HST SYSTEM(D TYPE)(NO.100001-102349)

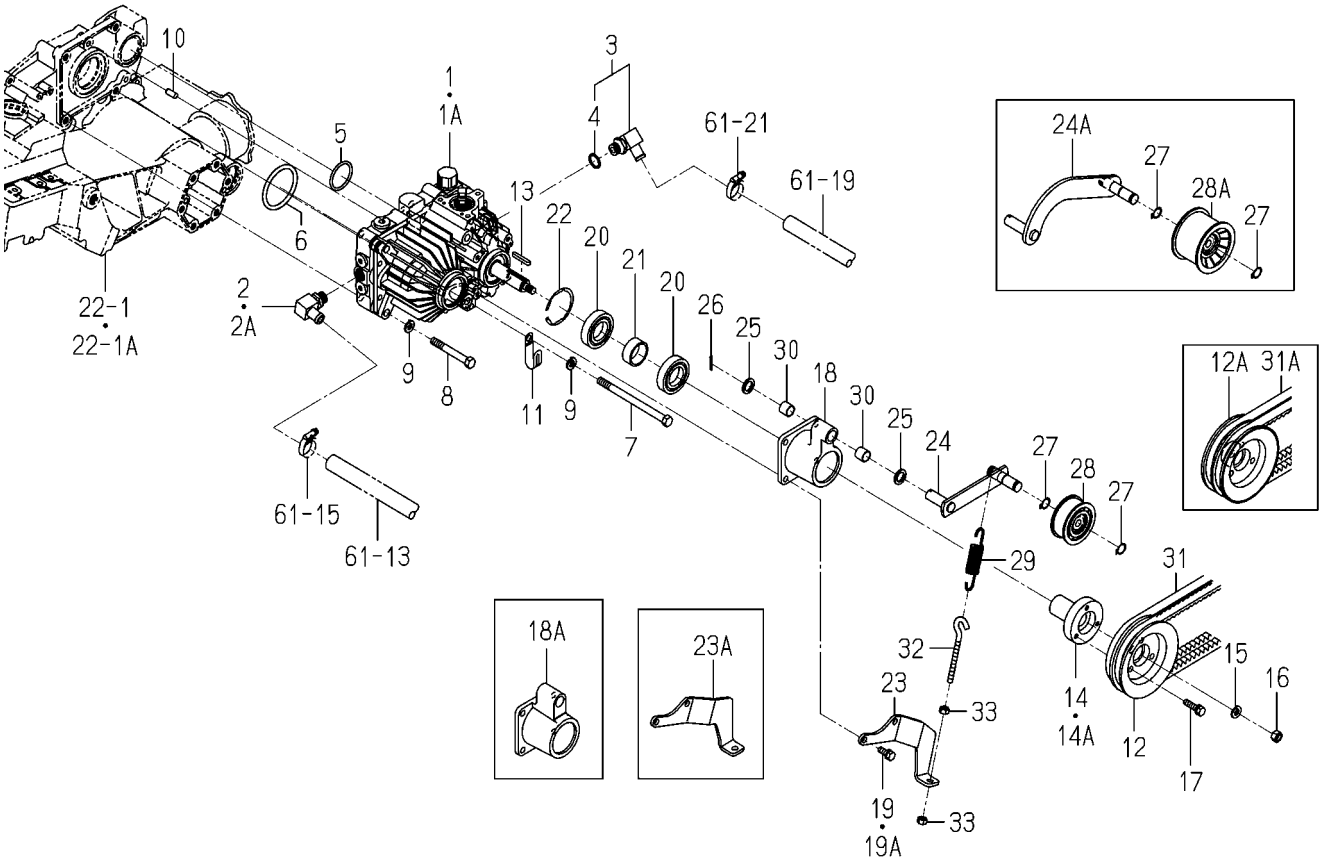

2213-131K-0100

KEY	PART CODE	DESCRIPTION	SPC	TYPE OF MODEL PZ80E16		ITC	COL	GRP	REMARKS
1	K510-013-000-20	HST/PZ/21 ASSY	*	1 -102260					FIG 191
1A	K510-013-000-30	HST/PZ/21 ASSY	*	1 -102349		1			FIG 191
2	2204-131-011-00	ADAPTER/G3/816 ASSY	*	1 -100472					
2A	2204-131-011-00	ADAPTER/G3/816 ASSY	*	1 -102349					
3	P103-521-007-00	ELBOW/SUCTION ASSY	*	1 -102349					
4	V720-112-401-80	O-RING/P18	*	1 -102349					
5	V720-103-503-90	O-RING/P39	*	1 -102349					
6	V721-103-106-00	O-RING/G60	*	1 -102349					
7	V201-261-014-00	BOLT/M10X140	*	2 -102349					
8	V201-261-007-50	BOLT/M10X75	*	2 -102349					
9	V401-160-010-00	WASHER,SP/M10	*	4 -102349					
10	V522-100-801-80	PIN	*	2 -102349					
11	3737-172-011-00	CLAMP,HARNESS	*	1 -102349					
12	2213-131-001-00	PULLEY/VB117	*	1 -101046					
12A	2213-131-021-00	PULLEY/VB117/VB117	*	1 -102349					
13	2178-631-013-00	KEY/05X05X35	*	1 -102349					
14	2213-131-006-00	HUB/PULLEY	*	1 -101422					
14A	2213-131-006-10	HUB/PULLEY	*	1 -102349		1			
15	V401-160-010-00	WASHER,SP/M10	*	1 -102349					
16	V334-260-010-00	NUT/M10	*	1 -102349					
17	V211-260-803-00	BOLT,SEMS	*	3 -102349					
18	2213-131-002-00	METAL/PULLEY/HST	*	1 -101046					
18A	2213-131-022-10	METAL/PULLEY/HST/W	*	1 -102349		1			
19	V211-260-802-00	BOLT/S	*	4 -101046					
19A	V211-260-802-50	BOLT/S	*	4 -102349					
20	V600-150-600-60	BEARING,RB/6006SS	*	2 -102349					
21	2213-131-009-00	COLLER/32X38X15	*	1 -102349					
22	V707-140-055-00	RING/SNAP	*	1 -102349					
23	2213-131-011-00	PLATE/TENSION/K	*	1 -101046					
23A	2213-131-012-00	PLATE/TENSION/W	*	1 -102349					

FIG. 17 HST SYSTEM(D TYPE)(NO.100001-102349)

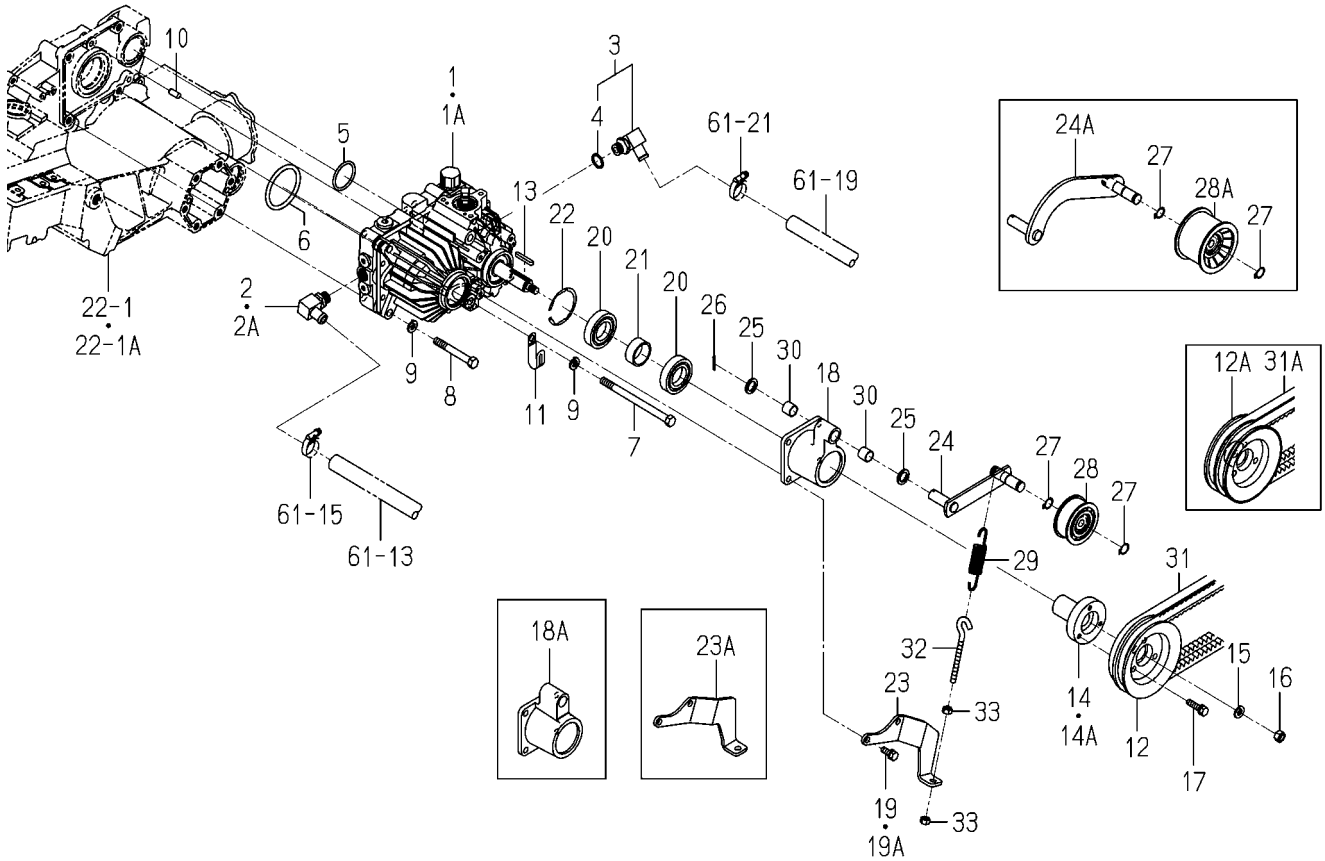

2213-131K-0100

KEY	PART CODE	DESCRIPTION	SPC	TYPE OF MODEL PZ80E16		ITC	COL	GRP	REMARKS
24	2213-131-200-10	ARM/TENSION COMP	*	1 -101046					
24A	2213-131-520-00	ARM/TENSION/W	*	1 -102349					
25	2144-337-007-00	WASHER	*	2 -102349					
26	V500-162-502-00	PIN,SPLIT/2.5X20	*	1 -102349					
27	V704-140-015-00	RING,SNAP/15 C	*	2 -102349					
28	3621-211-002-00	PULLEY,TENSION	*	1 -101046					
28A	3646-703-001-00	PULLEY,TENTION 70X47	*	1 -102349					
29	2188-105-004-00	SPRING/HE089	*	1 -102349					
30	3650-106-006-00	BUSH/15X17X15	*	2 -102349					
31	2213-131-008-00	BELT/VB052/HP-X	*	1 -101046					
31A	2213-131-400-00	BELT/VB052/HP-1 SET	*	1 -102349					
32	2142-407-002-10	ROD,ADJUST/90	*	1 -102349					
33	V304-260-008-00	NUT	*	2 -102349					

FIG. 18 LINK(HST)SYSTEM(NO.100001-102349)

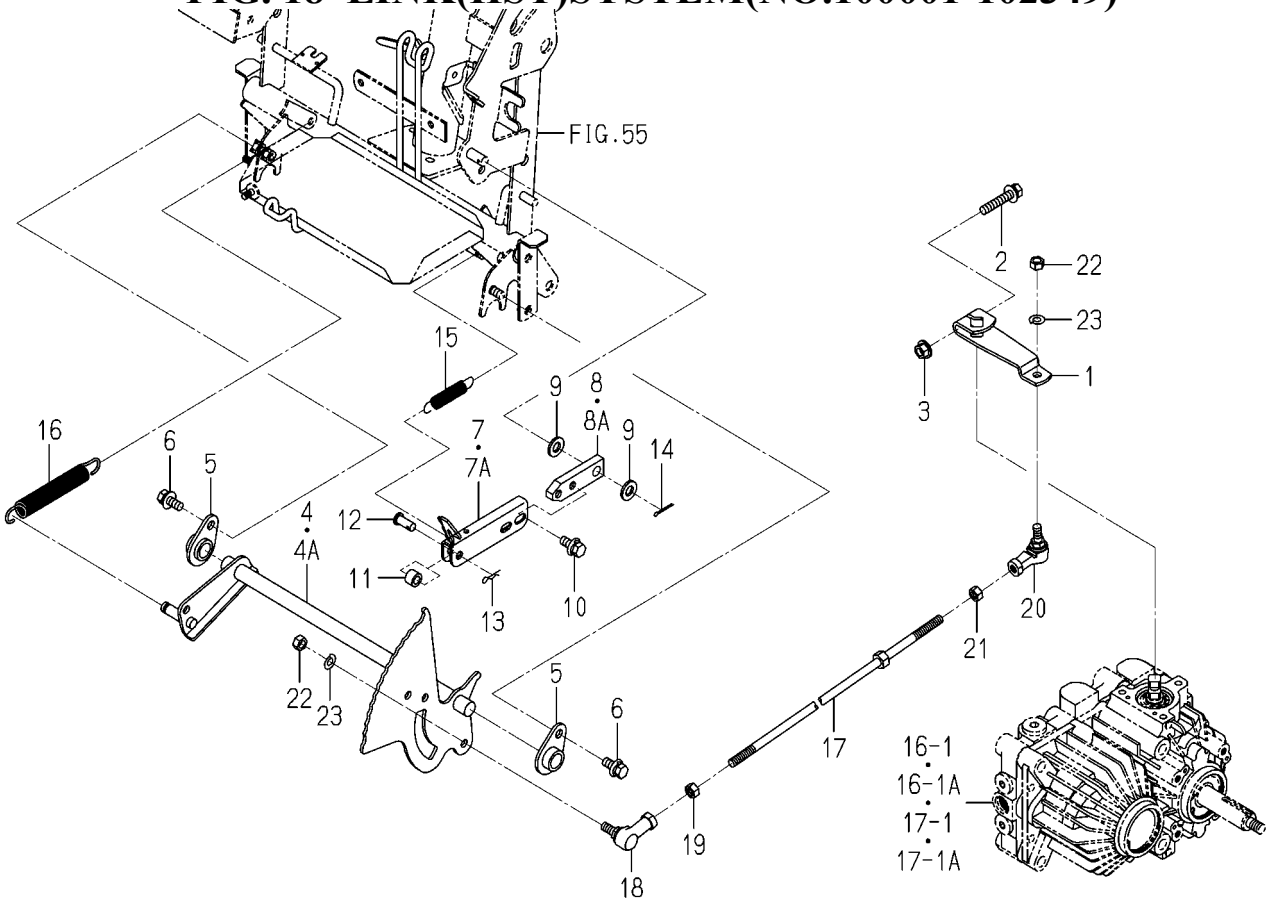

2213-132A-0100

KEY	PART CODE	DESCRIPTION	SPC	TYPE OF MODEL PZ80E16		ITC	COL	GRP	REMARKS
1	2204-132-003-00	ARM/TRANION	*	1 -102349					
2	V211-360-804-50	BOLT/SP	*	1 -102349					
3	V363-260-008-00	NUT/WASHER	*	1 -102349					
4	2213-132-200-10	SHAFT/HST/8 COMP	*	1 -101046					
4A	2213-132-200-20	SHAFT/HST/8 COMP	*	1 -102349		3			
5	2186-320-330-00	PLATE	*	2 -102349					
6	V211-360-802-00	BOLT/SP	*	2 -102349					
7	2213-132-270-10	PLATE/HST	*	1 -101744					
7A	2213-132-270-30	PLATE/HST/ADJUST	*	1 -102349		3			
8	2213-132-001-10	PLATE/HST/ADJUST	*	1 -101744					
8A	2213-132-001-20	PLATE/HST/ADJUST/FUL	*	1 -102349		3			
9	1365-121-005-00	WASHER/10X20X2	*	2 -102349					
10	V211-360-801-60	BOLT,SEMS (SP)	*	2 -102349					
11	2204-132-002-10	ROLLER/08X13X10	*	1 -102349					
12	3560-203-002-00	PIN,TRIP-HOOK ROD	*	1 -102349					
13	3908-170-020-00	PIN/SNAP/08	*	1 -102349					
14	V500-162-502-00	PIN,SPLIT/2.5X20	*	1 -102349					
15	2183-778-013-00	SPRING/HE068	*	1 -102349					
16	2204-132-009-10	SPRING/HE128	*	1 -102349					
17	2204-132-260-10	ROD/HST	*	1 -102349					
18	1560-695-021-00	JOINT BALL M08RH	*	1 -102349					
19	V304-260-008-00	NUT	*	1 -102349					
20	1560-695-022-00	JOINT BALL M08LH	*	1 -102349					
21	1560-132-007-30	NUT/M8	*	1 -102349					
22	V304-260-008-00	NUT	*	2 -102349					
23	V401-160-008-00	WASHER,SP/M 8	*	2 -102349					

FIG. 19 LINK(HST)SYSTEM(NO.102350-)

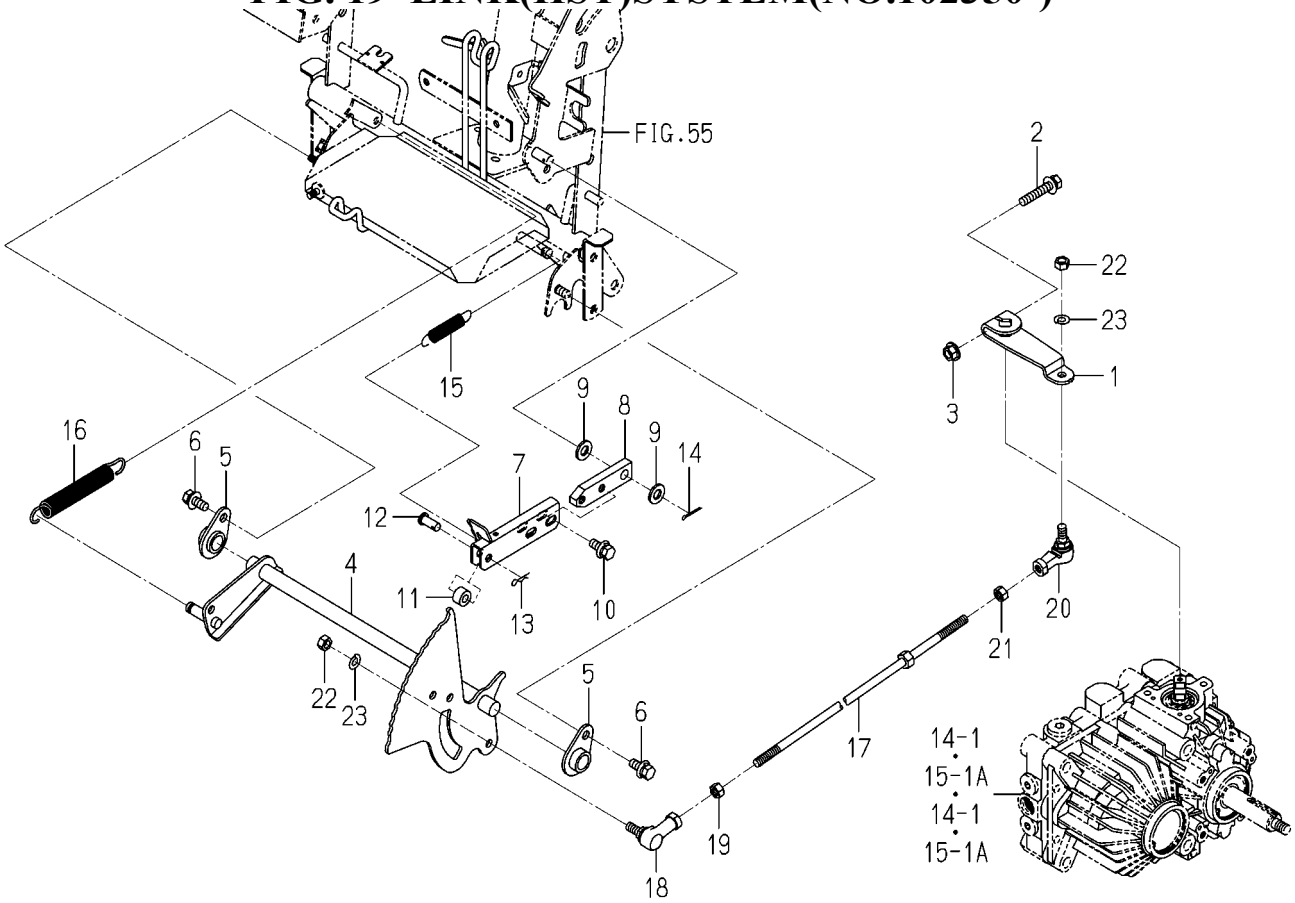

2213-132B-0100

KEY	PART CODE	DESCRIPTION	SPC	TYPE OF MODEL PZ80E16		ITC	COL	GRP	REMARKS
1	2213-132-003-00	ARM/TRUNNION/8	*	1 102350-					
2	V211-360-804-50	BOLT/SP	*	1 102350-					
3	V363-260-008-00	NUT/WASHER	*	1 102350-					
4	2213-132-200-20	SHAFT/HST/8 COMP	*	1 102350-					
5	2186-320-330-00	PLATE	*	2 102350-					
6	V211-360-802-00	BOLT/SP	*	2 102350-					
7	2213-132-270-30	PLATE/HST/ADJUST	*	1 102350-					
8	2213-132-001-20	PLATE/HST/ADJUST/FUL	*	1 102350-					
9	1365-121-005-00	WASHER/10X20X2	*	2 102350-					
10	V211-360-801-60	BOLT,SEMS (SP)	*	2 102350-					
11	2204-132-002-10	ROLLER/08X13X10	*	1 102350-					
12	3560-203-002-00	PIN,TRIP-HOOK ROD	*	1 102350-					
13	3908-170-020-00	PIN/SNAP/08	*	1 102350-					
14	V500-162-502-00	PIN,SPLIT/2.5X20	*	1 102350-					
15	2183-778-013-00	SPRING/HE068	*	1 102350-					
16	2204-132-009-10	SPRING/HE128	*	1 102350-					
17	2204-132-260-10	ROD/HST	*	1 102350-					
18	1560-695-021-00	JOINT BALL M08RH	*	1 102350-					
19	V304-260-008-00	NUT	*	1 102350-					
20	1560-695-022-00	JOINT BALL M08LH	*	1 102350-					
21	1560-132-007-30	NUT/M8	*	1 102350-					
22	V304-260-008-00	NUT	*	2 102350-					
23	V401-160-008-00	WASHER,SP/M 8	*	2 102350-					

FIG. 20 PEDAL(ACCELERATOR)SYSTEM(D TYPE)

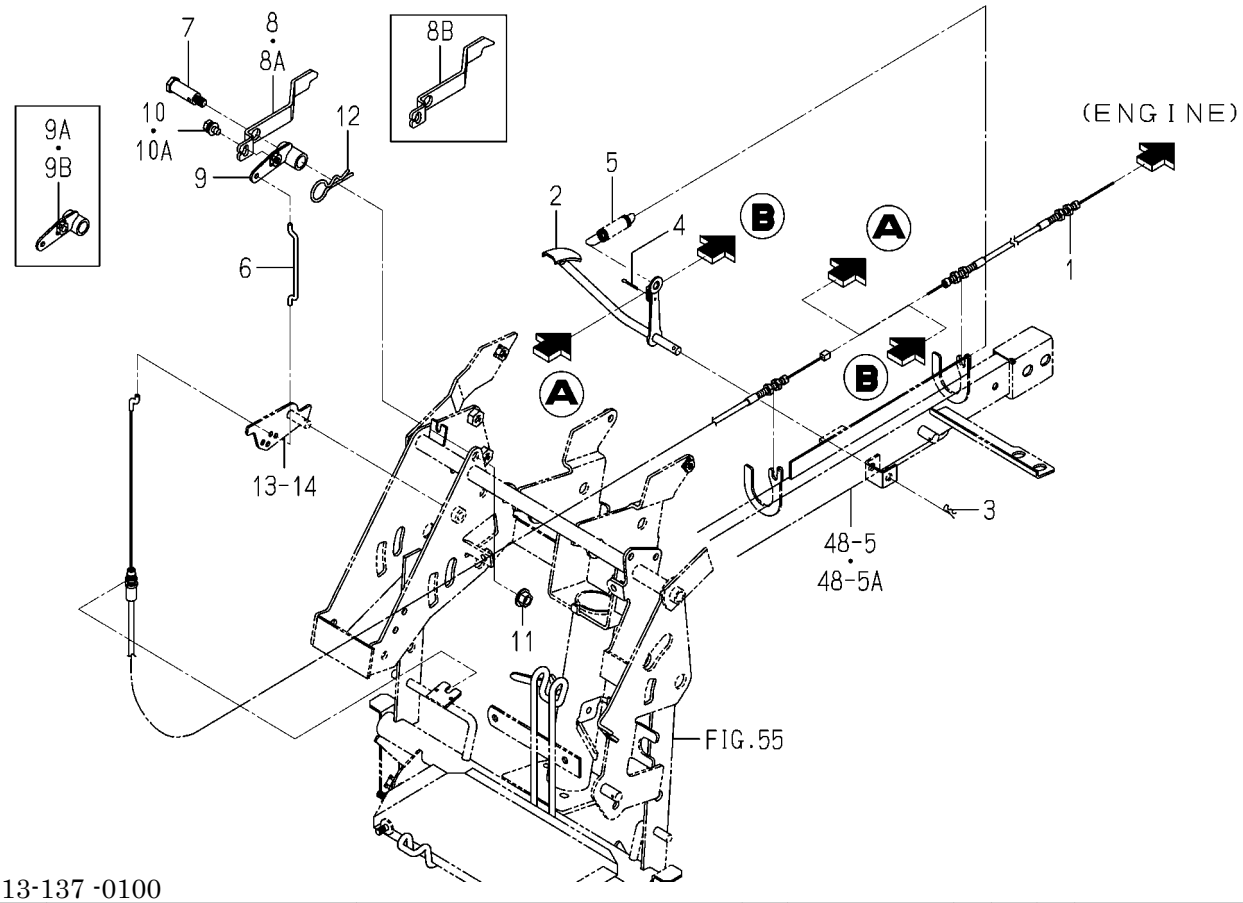

2213-137 -0100

KEY	PART CODE	DESCRIPTION	SPC	TYPE OF MODEL PZ80E16		ITC	COL	GRP	REMARKS
1	2213-137-001-00	CABLE/THROTTLE/D	*	1					
2	2204-137-200-00	PEDAL,ACCELERATOR	*	1					
3	3908-170-020-00	PIN/SNAP/08	*	1					
4	V500-162-501-50	PIN,SPLIT/2.5X15	*	1					
5	2161-615-014-00	SPRING,HE071	*	1					
6	2213-137-003-00	ROD/ACCELERATOR	*	1					
7	2213-137-004-00	PIN/12X31	*	1					
8	2213-137-005-00	ARM/ACCELERATOR/BACK	*	1 -100886					
8A	2213-137-005-10	ARM/ACCELERATOR/BACK	*	1 -101034		1			
8B	2213-137-005-20	ARM/ACCELERATOR/BACK	*	1 101035-		1			
9	2213-137-210-00	ARM/ACCELERATOR COMP	*	1 -100844					
9A	2213-137-210-10	ARM/ACCELERATOR COMP	*	1 -100886		1			
9B	2213-137-210-20	ARM/ACCELERATOR COMP	*	1 100887-		1			
10	V210-360-601-20	BOLT,SEMS	*	1 -100886					
10A	V210-360-601-60	BOLT(SP)/M6X16	*	1 100887-					
11	V362-260-008-00	NUT/WASHER	*	1					
12	7957-405-003-00	PIN/HAIR	*	1 -100886					

FIG. 21 PEDAL(ACCELERATOR)SYSTEM(G TYPE)

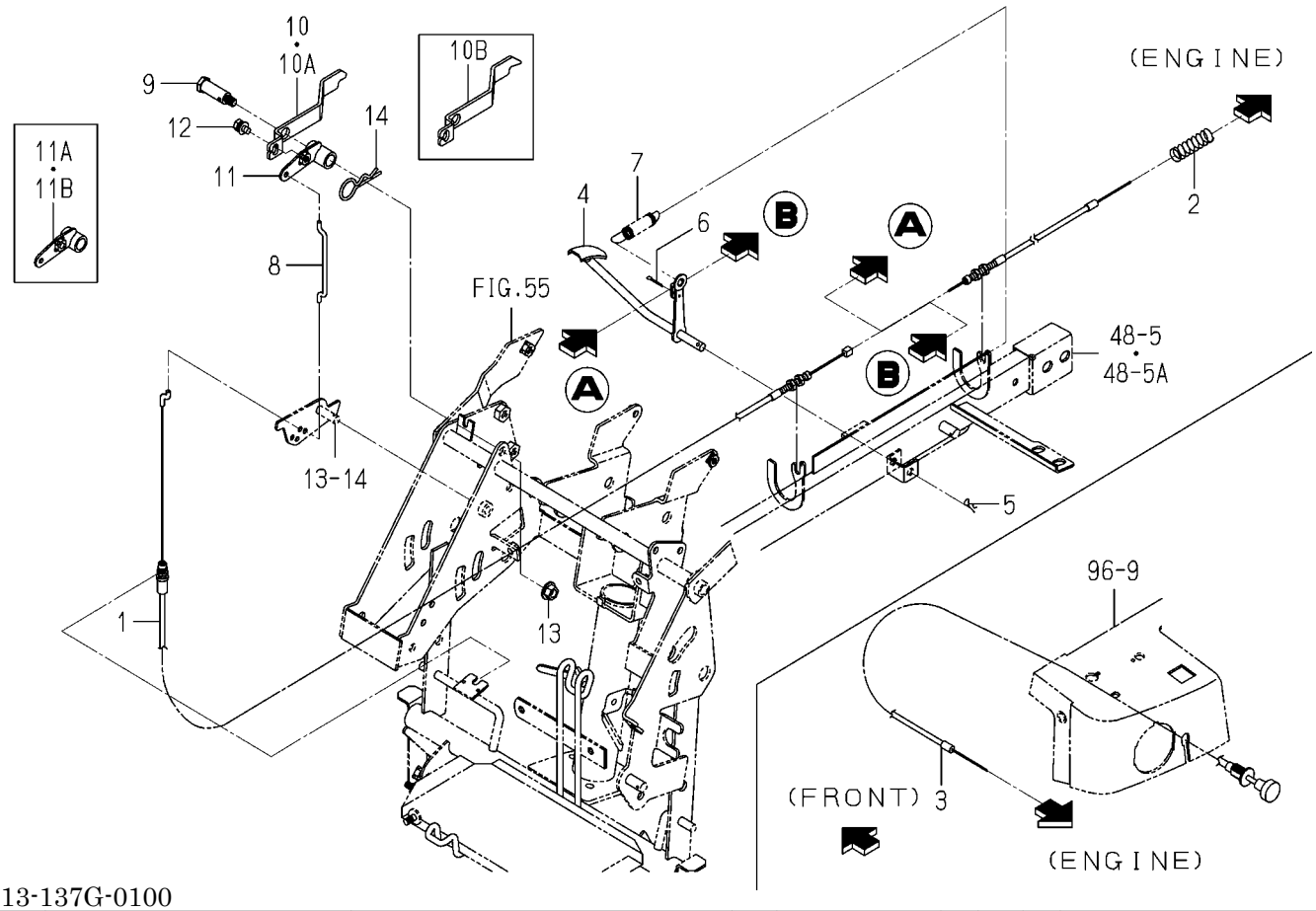

2213-137G-0100

KEY	PART CODE	DESCRIPTION	SPC	TYPE OF MODEL PZ80E16		ITC	COL	GRP	REMARKS
1	2204-137-005-00	CABLE/ACCEL	*	1					
2	2171-513-002-00	SPRING/HC050	*	1					
3	2204-137-006-00	CABLE/CHOCK/FD	*	1					
4	2204-137-200-00	PEDAL,ACCELERATOR	*	1					
5	3908-170-020-00	PIN/SNAP/08	*	1					
6	V500-162-501-50	PIN,SPLIT/2.5X15	*	1					
7	2161-615-014-00	SPRING,HE071	*	1					
8	2213-137-003-00	ROD/ACCELERATOR	*	1					
9	2213-137-004-00	PIN/12X31	*	1					
10	2213-137-005-00	ARM/ACCELERATOR/BACK	*	1 -100886					
10A	2213-137-005-10	ARM/ACCELERATOR/BACK	*	1 -101034		1			
10B	2213-137-005-20	ARM/ACCELERATOR/BACK	*	1 101035-		1			
11	2213-137-210-00	ARM/ACCELERATOR COMP	*	1 -100844					
11A	2213-137-210-10	ARM/ACCELERATOR COMP	*	1 -100886		1			
11B	2213-137-210-20	ARM/ACCELERATOR COMP	*	1 100887-		1			
12	V210-360-601-20	BOLT,SEMS	*	1					
13	V362-260-008-00	NUT/WASHER	*	1					
14	7957-405-003-00	PIN/HAIR	*	1					

FIG. 22 CASE(TRANSMISSION)SYSTEM

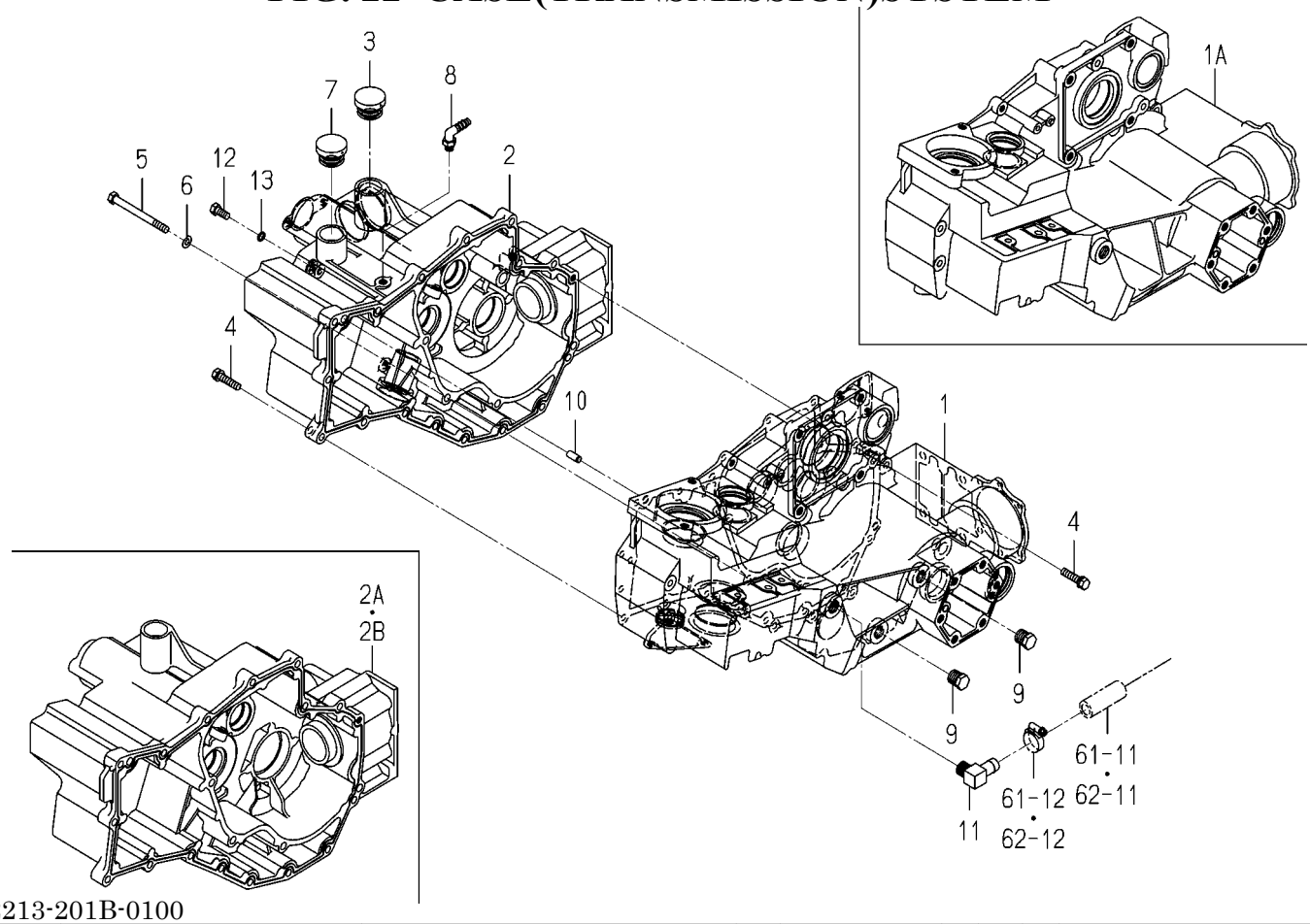

2213-201B-0100

KEY	PART CODE	DESCRIPTION	SPC	TYPE OF MODEL PZ80E16		ITC	COL	GRP	REMARKS
1	2204-201-001-30	CASE/TRANSMISSION/LH	*	1 -101649					
1A	2204-201-001-40	CASE/TRANSMISSION/LH	*	1 101650-		1			
2	2213-201-012-00	CASE/TRANSMISSION/8/	*	1 -102349					
2A	2213-201-012-40	CASE/TRANSMISSION/8/	*	1 -102400		3			
2B	2213-201-012-50	CASE/TRANSMISSION/8/	*	1 102401-		1			
3	7954-205-101-00	CAP,OIL/30	*	1					
4	V211-560-803-50	BOLT/S	*	17					
5	V201-360-809-00	BOLT	*	3					
6	V401-160-008-00	WASHER,SP/M 8	*	3					
7	2204-201-003-00	CAP/35/YELLOW	*	1					
8	2194-410-006-00	CONNECTOR	*	1					
9	V781-160-000-6B	PLUG/SCREW/SEAL	*	2					
10	V522-100-801-80	PIN	*	8					
11	3676-352-002-00	ADAPTOR/3X8	*	1					
12	2188-201-007-00	BOLT/M8X12	*	2					
13	V720-101-900-80	O-RING/P 8	*	2					

FIG. 23 SHAFT(INPUT)SYSTEM(D TYPE)

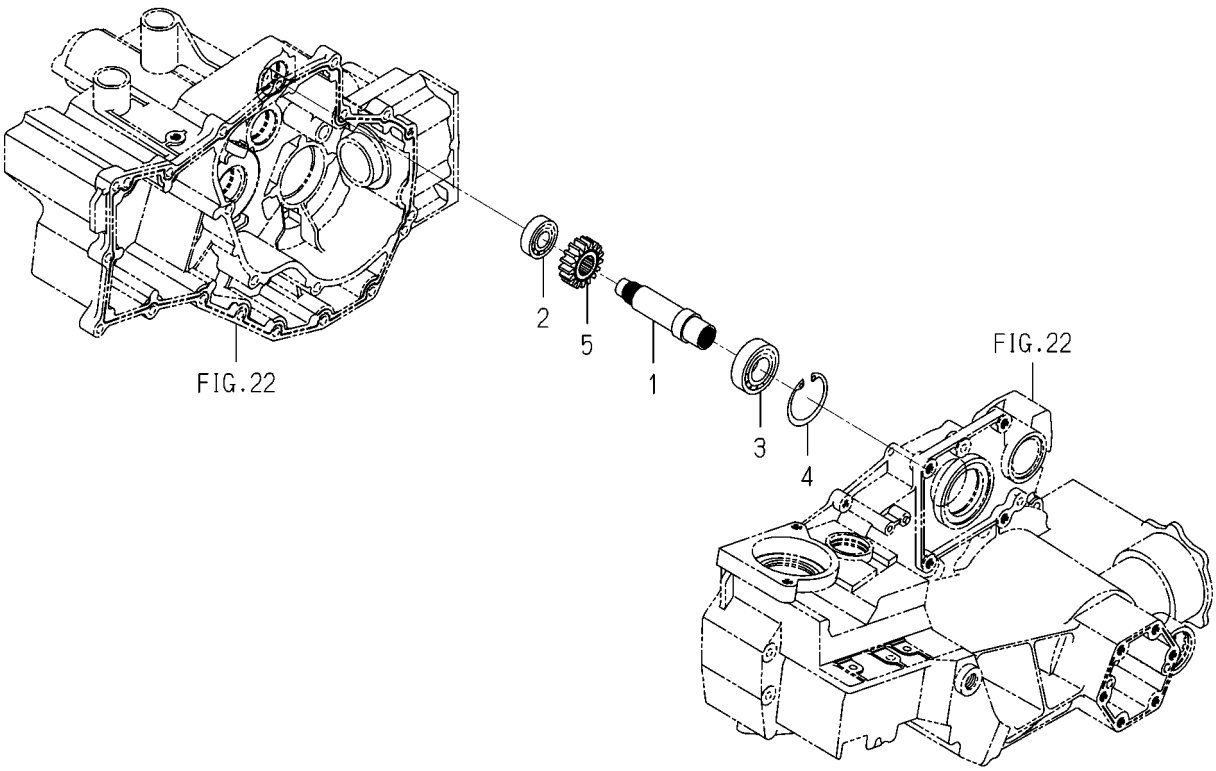

2213-202 -0100

KEY	PART CODE	DESCRIPTION	SPC	TYPE OF MODEL PZ80E16		ITC	COL	GRP	REMARKS
1	2204-202-200-10	SHAFT	*	1					
2	V600-110-620-30	BEARING,RB/6203	*	1					
3	V600-110-620-50	BEARING,RB/6205	*	1					
4	V705-140-052-00	RING,SNAP/52 C	*	1					
5	2213-202-002-20	GEAR/SPUR/17	*	1					

FIG. 24 SHAFT(INPUT)SYSTEM(G TYPE)

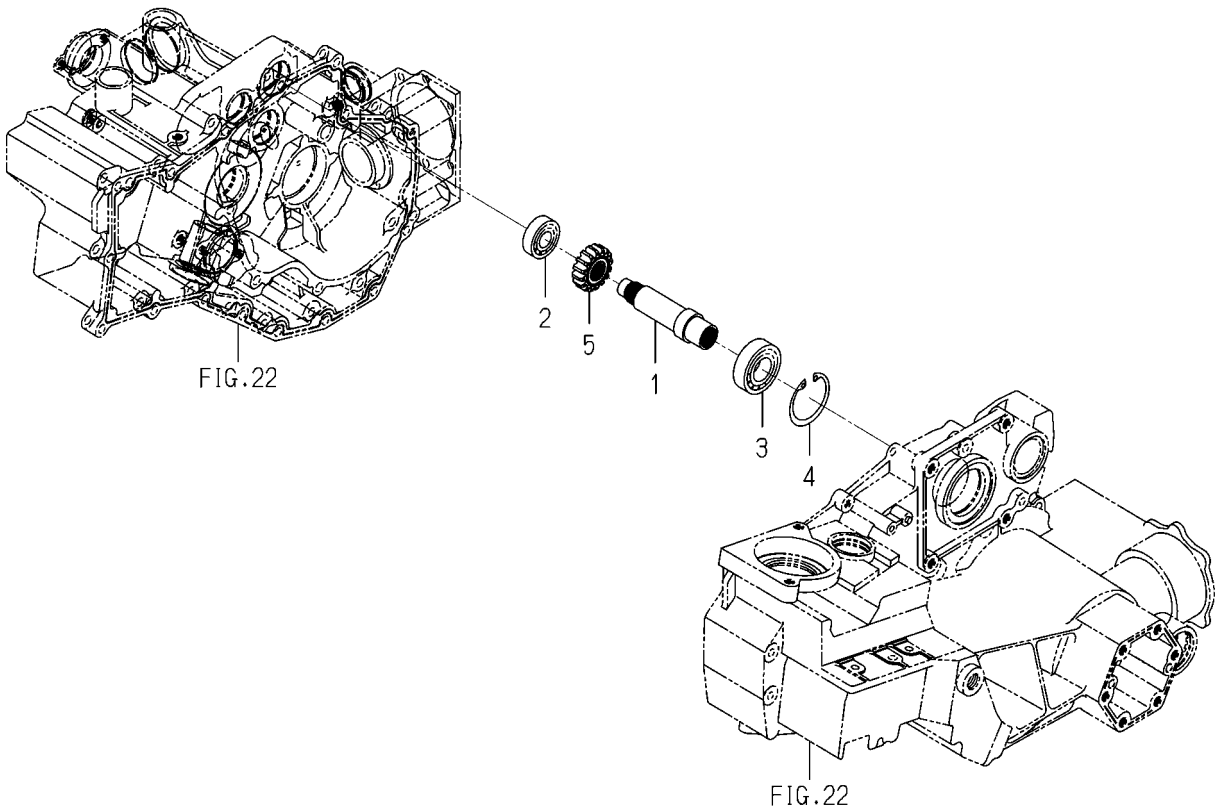

2213-202G-0100

KEY	PART CODE	DESCRIPTION	SPC	TYPE OF MODEL PZ80E16		ITC	COL	GRP	REMARKS
1	2204-202-200-10	SHAFT	*	1					
2	V600-110-620-30	BEARING,RB/6203	*	1					
3	V600-110-620-50	BEARING,RB/6205	*	1					
4	V705-140-052-00	RING,SNAP/52 C	*	1					
5	2213-202-003-20	GEAR/SPUR/16/G	*	1					

FIG. 25 SHAFT(CHANGE)SYSTEM(D TYPE)

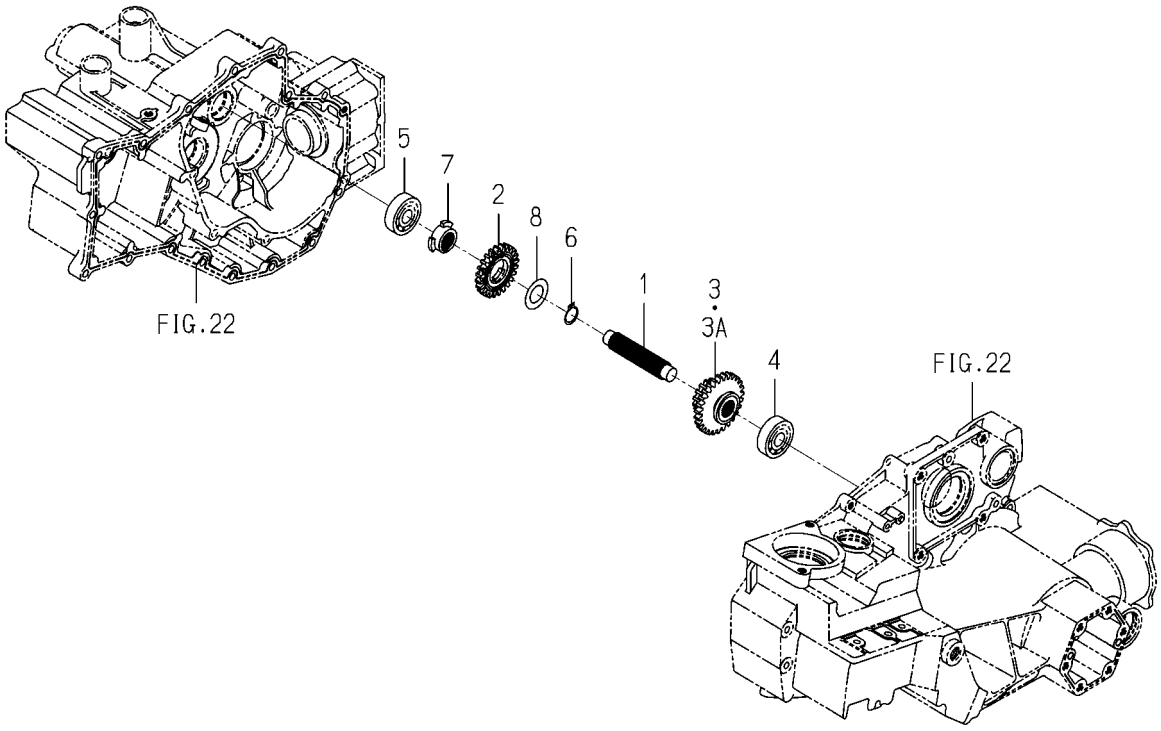

2213-203 -0100

KEY	PART CODE	DESCRIPTION	SPC	TYPE OF MODEL PZ80E16		ITC	COL	GRP	REMARKS
1	2204-203-001-00	SHAFT,CHANGE	*	1					
2	2213-203-005-20	GEAR/SPUR/24	*	1					
3	2204-203-003-10	GEAR,SPUR/15-27	*	1 -101649					
3A	2204-203-003-20	GEAR/SPUR/15-27	*	1 101650-		1			
4	V600-110-630-30	BEARING,RB/6303	*	1					
5	V600-110-630-30	BEARING,RB/6303	*	1					
6	V704-140-020-00	RING,SNAP/20C	*	1					
7	2204-203-005-00	HUB/CHANGE	*	1					
8	2204-203-006-00	WASHER/22X38X01	*	1					

FIG. 26 SHAFT(CHANGE)SYSTEM(G TYPE)

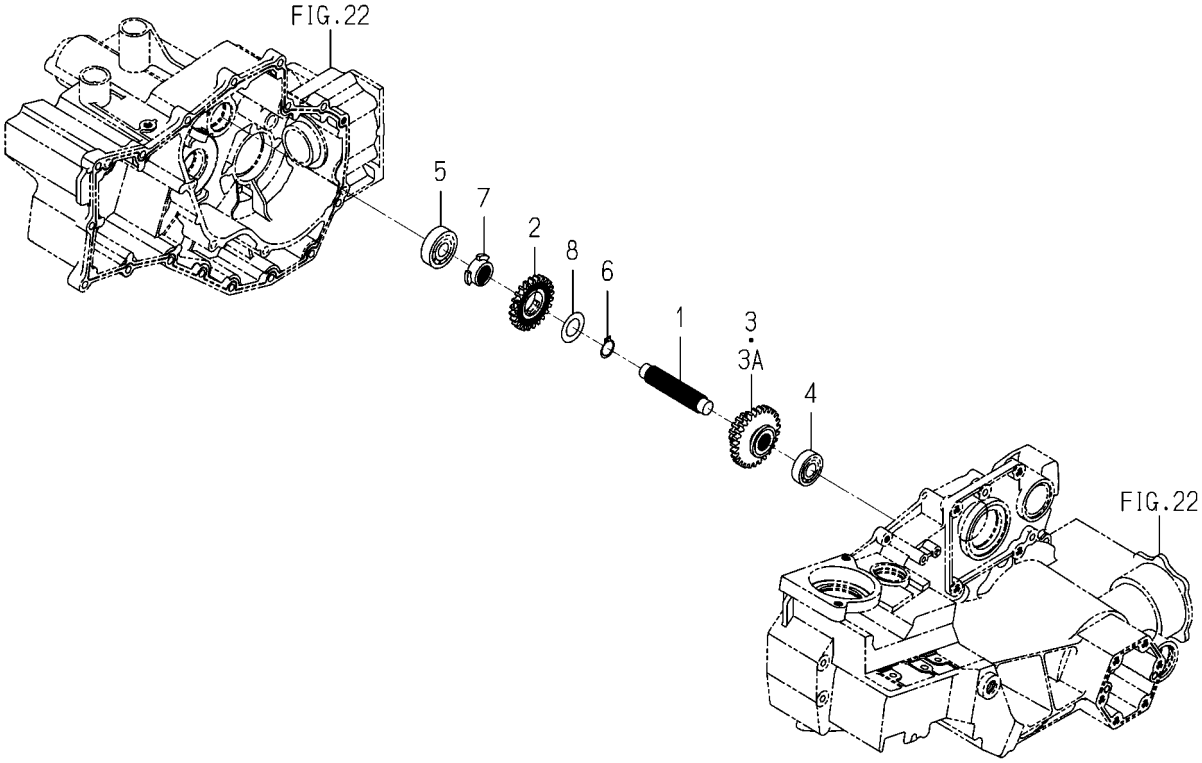

2213-203G-0100

KEY	PART CODE	DESCRIPTION	SPC	TYPE OF MODEL PZ80E16		ITC	COL	GRP	REMARKS
1	2204-203-001-00	SHAFT,CHANGE	*	1					
2	2213-203-006-20	GEAR/SPUR/24/G	*	1					
3	2204-203-003-10	GEAR,SPUR/15-27	*	1 -101649					
3A	2204-203-003-20	GEAR/SPUR/15-27	*	1 101650-		1			
4	V600-110-620-30	BEARING,RB/6203	*	1					
5	V600-110-630-30	BEARING,RB/6303	*	1					
6	V704-140-020-00	RING,SNAP/20C	*	1					
7	2204-203-005-00	HUB/CHANGE	*	1					
8	2204-203-006-00	WASHER/22X38X01	*	1					

FIG. 27 SHAFT(COUNTER)SYSTEM

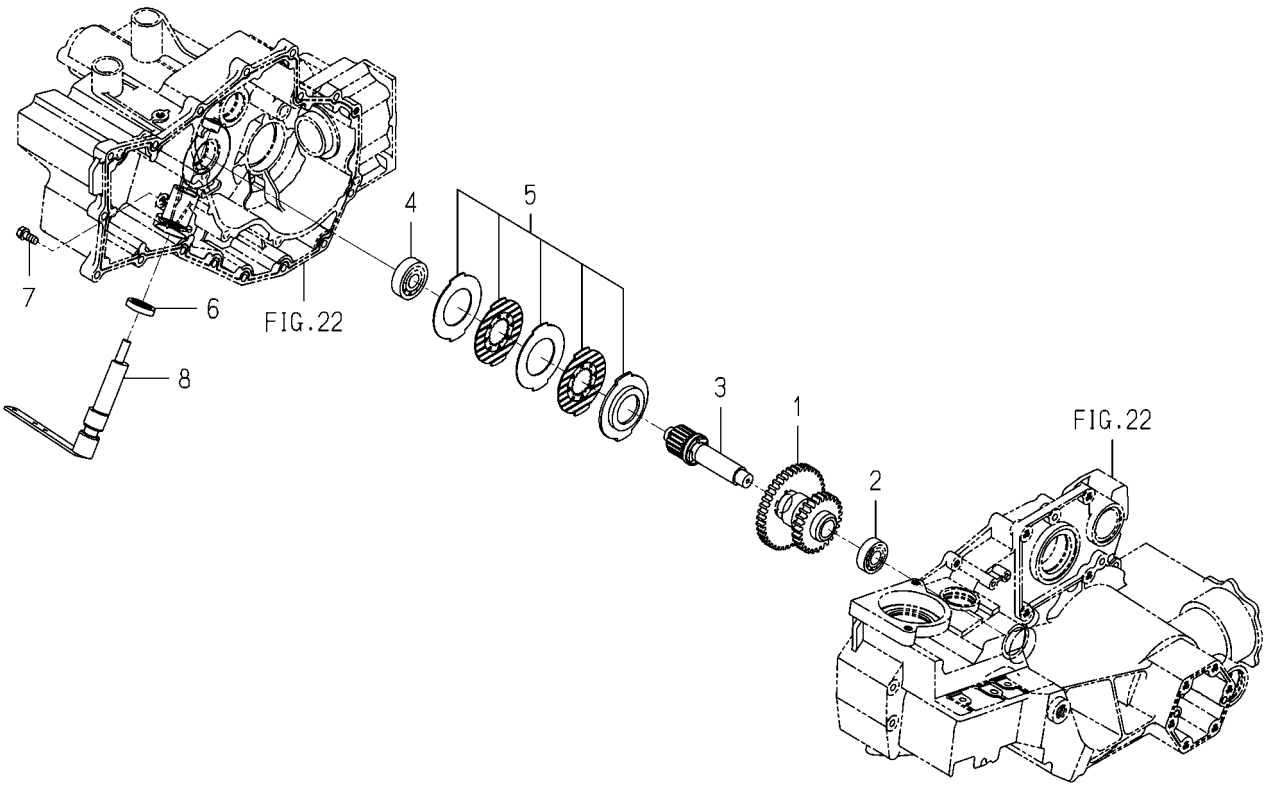

2213-204B-0100

KEY	PART CODE	DESCRIPTION	SPC	TYPE OF MODEL PZ80E16		ITC	COL	GRP	REMARKS
1	2204-204-200-20	GEAR/COUNTER	*	1 100001-					
2	V600-110-620-30	BEARING,RB/6203	*	1 100001-					
3	2204-204-220-10	SHAFT/COUNTER COMP	*	1 100001-					
4	V600-110-630-30	BEARING,RB/6303	*	1 100001-					
5	2213-204-200-00	BRAKE/8 ASSY	*	1 100001-					
6	V744-125-350-70	SEAL,OIL/TC25357	*	1 100001-					
7	2161-214-003-00	BOLT	*	1 100001-					
8	2204-204-210-10	SHAFT/BRAKE	*	1 100001-					

FIG. 28 SHAFT(OUTPUT)SYSTEM

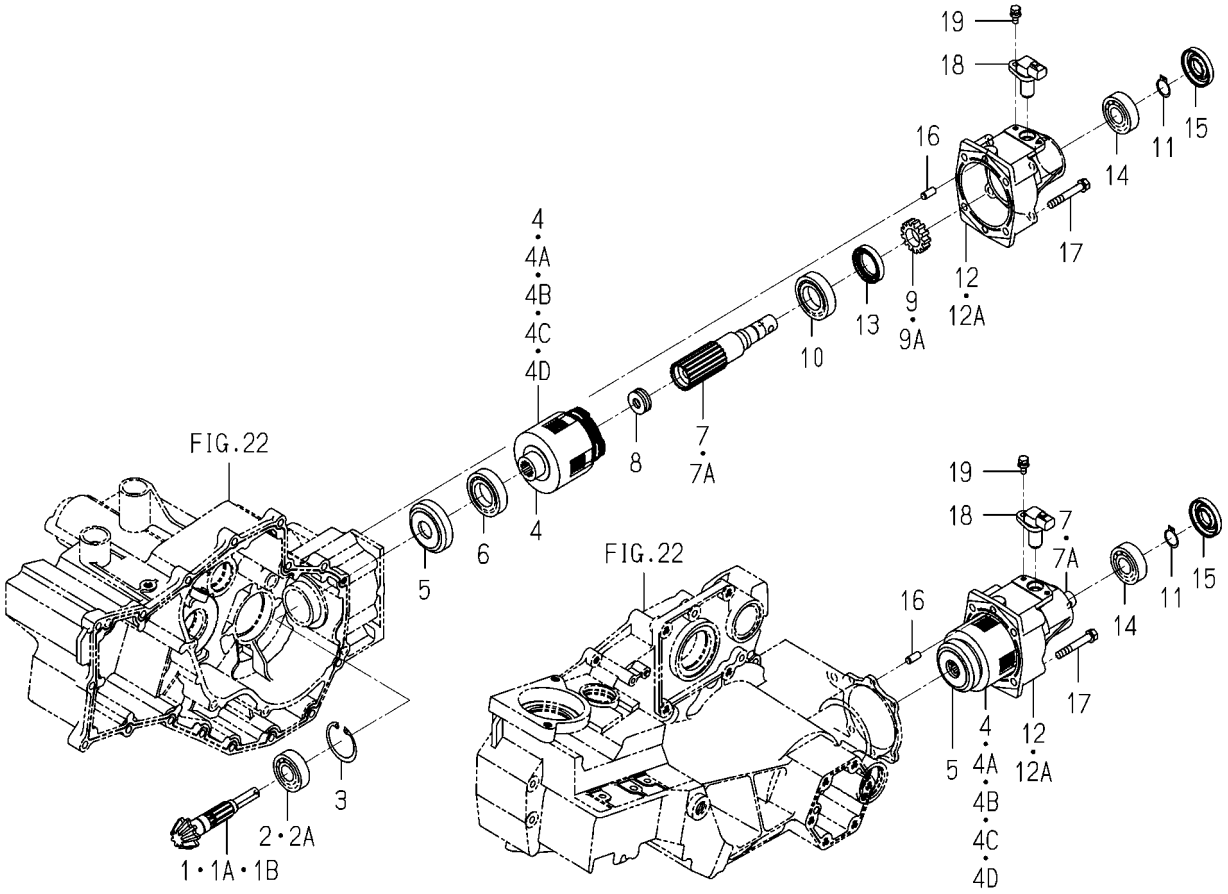

2213-207 -0100

KEY	PART CODE	DESCRIPTION	SPC	TYPE OF MODEL PZ80E16		ITC	COL	GRP	REMARKS
1	2213-207-002-10	GEAR/BEVEL/9/PZ8	*	2 -100349					
1A	2218-207-002-10	GEAR/BEVEL/9/PZ10	*	2 -102349		1			
1B	2213-207-021-00	GEAR/BEVEL/9/C	*	2 102350-					
2	V600-110-630-40	BEARING,RB/6304	*	2 -101649					
2A	1560-214-003-00	BEARING/BALL/6304SH2	*	2 101650-					
3	V705-140-052-00	RING,SNAP/52 C	*	2					
4	2213-207-200-10	CLUCH/BRAKE ASSY	*	2 -101757					
4A	2213-207-200-20	CLUTCH/BRAKE ASSY	*	2 -102200		1			
4B	2213-207-200-30	CLUTCH/BRAKE ASSY	*	2 -102289		3			
4C	2213-207-200-40	CLUTCH/BRAKE ASSY	*	2 -102349		1			
4D	2213-207-200-50	CLUTCH/BRAKE ASSY	*	2 102350-		3			
5	2213-207-003-00	HUB/CLUCH/8	*	2					
6	2213-207-005-00	BEARING	*	2					
7	2213-207-004-00	SHAFT/REARCLUTCH/8	*	2 -102200					
7A	2213-207-004-10	SHAFT/REARCLUTCH/8	*	2 102201-		1			
8	2204-207-005-00	THRUST/51201	*	2					
9	2204-207-012-20	GEAR/TURN	*	2 -101744					
9A	2204-207-012-30	GEAR/TURN	*	2 101745-		1			
10	V600-110-600-60	BEARING,RB 6006	*	2					
11	V704-140-020-00	RING,SNAP/20C	*	2					
12	2213-207-001-00	COVER/BRAKE/8	*	2 -102200					
12A	2213-207-001-20	COVER/BRAKE/8	*	2 102201-		1			
13	V744-130-500-80	SEAL,OIL/TC30508	*	2					
14	V600-110-620-40	BEARING,RB/6204	*	2					
15	V744-120-470-70	SEAL/OIL	*	2					
16	V522-100-801-80	PIN	*	4					
17	V211-260-805-50	BOLT/(S)M8X55	*	8					
18	2204-207-011-00	SENSOR	*	2					
19	V210-360-601-60	BOLT(SP)/M6X16	*	2					

FIG. 29 SHAFT(DRIVE/FRONT)SYSTEM (NO.100001-102349)

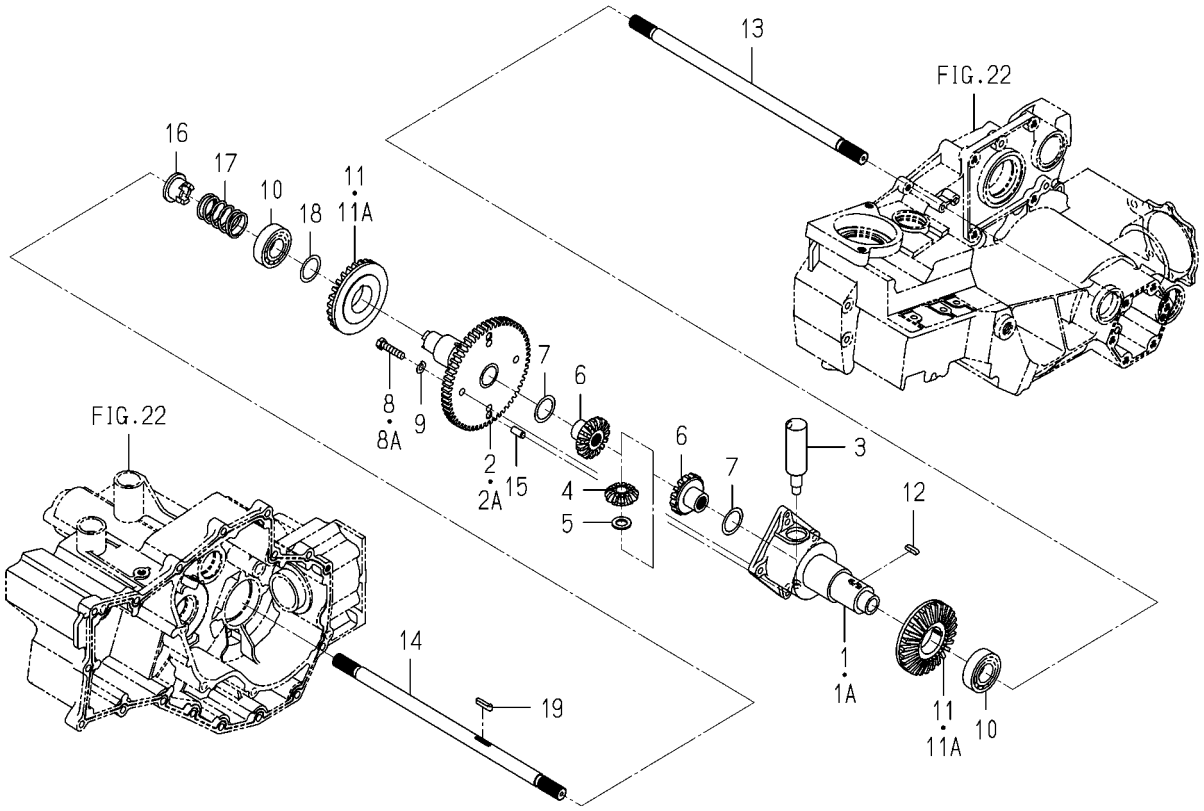

2204-208 -0100

KEY	PART CODE	DESCRIPTION	SPC	TYPE OF MODEL PZ80E16		ITC	COL	GRP	REMARKS
1	2204-208-017-00	CASE/FRONT/DEFF	*	1 -101649					
1A	2204-208-017-20	FRONT/DIFFCASE	*	1 -102349		1			
2	2204-208-210-10	HUB/DEFF/RH	*	1 -101649					
2A	2204-208-210-40	HUB/DIFF/RH COMP	*	1 -102349		1			
3	2204-208-013-00	SHAFT,PINION/DEFF	*	1 -102349					
4	2204-208-007-20	GEAR/BEVEL/11	*	1 -102349					
5	3533-201-003-00	WASHER/14X24X02	*	1 -102349					
6	2204-208-002-10	GEAR/BEVEL/15	*	2 -102349					
7	2204-208-008-00	WASHER/25X36X01	*	2 -102349					
8	2161-302-005-00	BOLT	*	4 -102260					
8A	2204-208-051-00	BOLT/M8X35/S	*	4 -102349					
9	V401-160-008-00	WASHER,SP/M 8	*	4 -102260					
10	V600-110-620-50	BEARING,RB/6205	*	2 -102349					
11	2204-208-003-10	GEAR/BEVEL/27	*	2 -101744					
11A	2204-208-003-30	GEAR/BEVEL/27	*	2 -102349		1			
12	3750-231-013-00	KEY,SPROCKET	*	2 -102349					
13	2204-208-006-00	SHAFT/FRONT DRIVE	*	1 -102349					
14	2204-208-005-10	SHAFT/FRONT DRIVE/RH	*	1 -102349					
15	V522-100-801-80	PIN	*	2 -102349					
16	2204-208-004-10	CLUTCH/DIFFLOCK	*	1 -102349					
17	2204-208-009-10	SPRING/HC037	*	1 -102349					
18	2204-208-008-00	WASHER/25X36X01	*	1 -102349					
19	2204-208-018-00	KEY/05X05X26	*	1 -102349					

FIG. 30 SHAFT(DRIVE/FRONT)SYSTEM(NO.102350-)

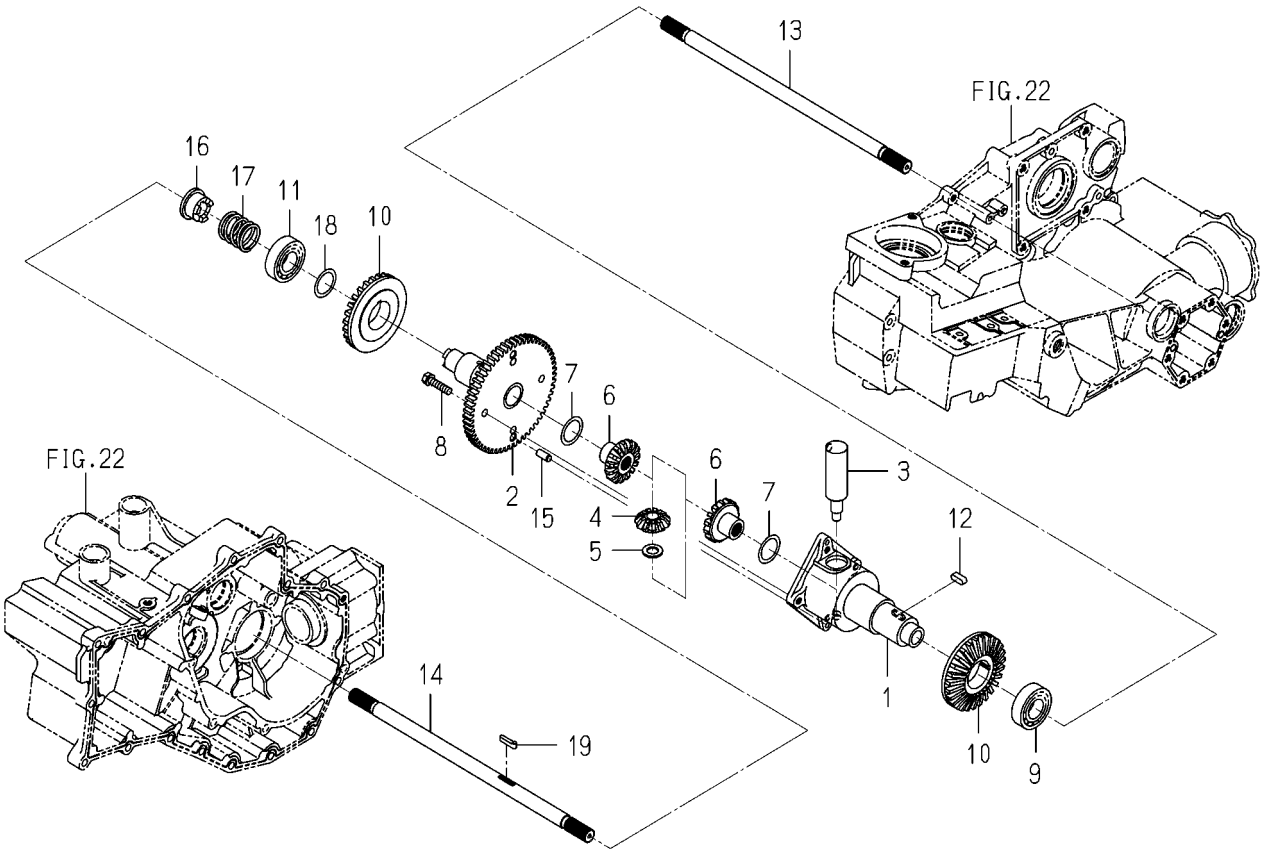

2213-208 -0100

KEY	PART CODE	DESCRIPTION	SPC	TYPE OF MODEL PZ80E16		ITC	COL	GRP	REMARKS
1	2204-208-017-40	FRONT/DIFFCASE	*	1 102350-		1			
2	2204-208-210-50	HUB/DIFF/RH COMP	*	1 102350-		3			
3	2204-208-013-00	SHAFT,PINION/DEFF	*	1 102350-					
4	2204-208-007-20	GEAR/BEVEL/11	*	1 102350-					
5	3533-201-003-00	WASHER/14X24X02	*	1 102350-					
6	2204-208-002-10	GEAR/BEVEL/15	*	2 102350-					
7	2204-208-008-20	WASHER/25X36X01	*	2 102350-		1			
8	2204-208-051-00	BOLT/M8X35/S	*	4 102350-					
9	V600-110-620-50	BEARING,RB/6205	*	1 102350-					
10	2213-208-003-10	GEAR/BEVEL/27/C	*	2 102350-		3			
11	V600-110-620-60	BEARING,RB/6206	*	1 102350-					
12	2204-208-019-00	KEY/07X07X20	*	2 102350-					
13	2204-208-006-00	SHAFT/FRONT DRIVE	*	1 102350-					
14	2204-208-005-10	SHAFT/FRONT DRIVE/RH	*	1 102350-					
15	V522-100-801-80	PIN	*	2 102350-					
16	2204-208-004-20	CLUTCH/DIFFLOCK	*	1 102350-		3			
17	2204-208-009-20	SPRING/HC040	*	1 102350-		3			
18	2204-208-035-00	WASHER/30X38X01	*	1 102350-					
19	2204-208-018-00	KEY/05X05X26	*	1 102350-					

FIG. 31 SHAFT(DRIVE/PLANTING)SYSTEM(D TYPE)

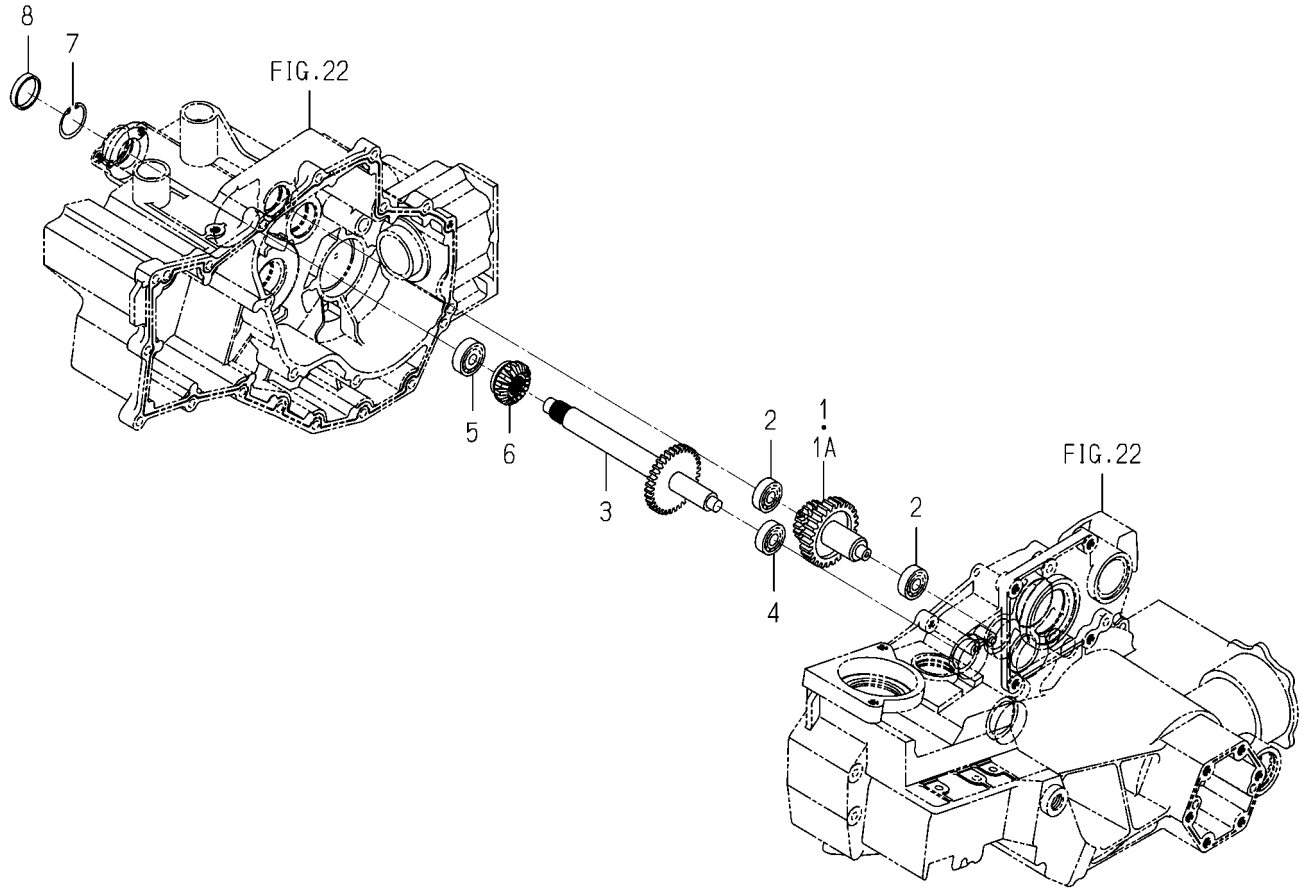

2213-209D-0100

KEY	PART CODE	DESCRIPTION	SPC	TYPE OF MODEL PZ80E16		ITC	COL	GRP	REMARKS
1	2213-209-220-00	SHAFT/DRIVE/8D COMP	*	1 -101811					
1A	2213-209-220-10	SHAFT/DRIVE/8D COMP	*	1 101812-		1			
2	V600-110-630-10	BEARING,RB/6301	*	2					
3	2213-209-520-00	SHAFT/COUNTER/8 COMP	*	1					
4	V600-110-630-10	BEARING,RB/6301	*	1					
5	V600-110-620-20	BEARING,RB/6202	*	1					
6	2213-211-002-00	GEAR/BEVEL/12/PZ8	*	1					
7	V705-140-035-00	RING,CIRCLIP	*	1					
8	3737-211-007-00	CAP/35	*	1					

FIG. 32 SHAFT(DRIVE/PLANTING)SYSTEM(G TYPE)

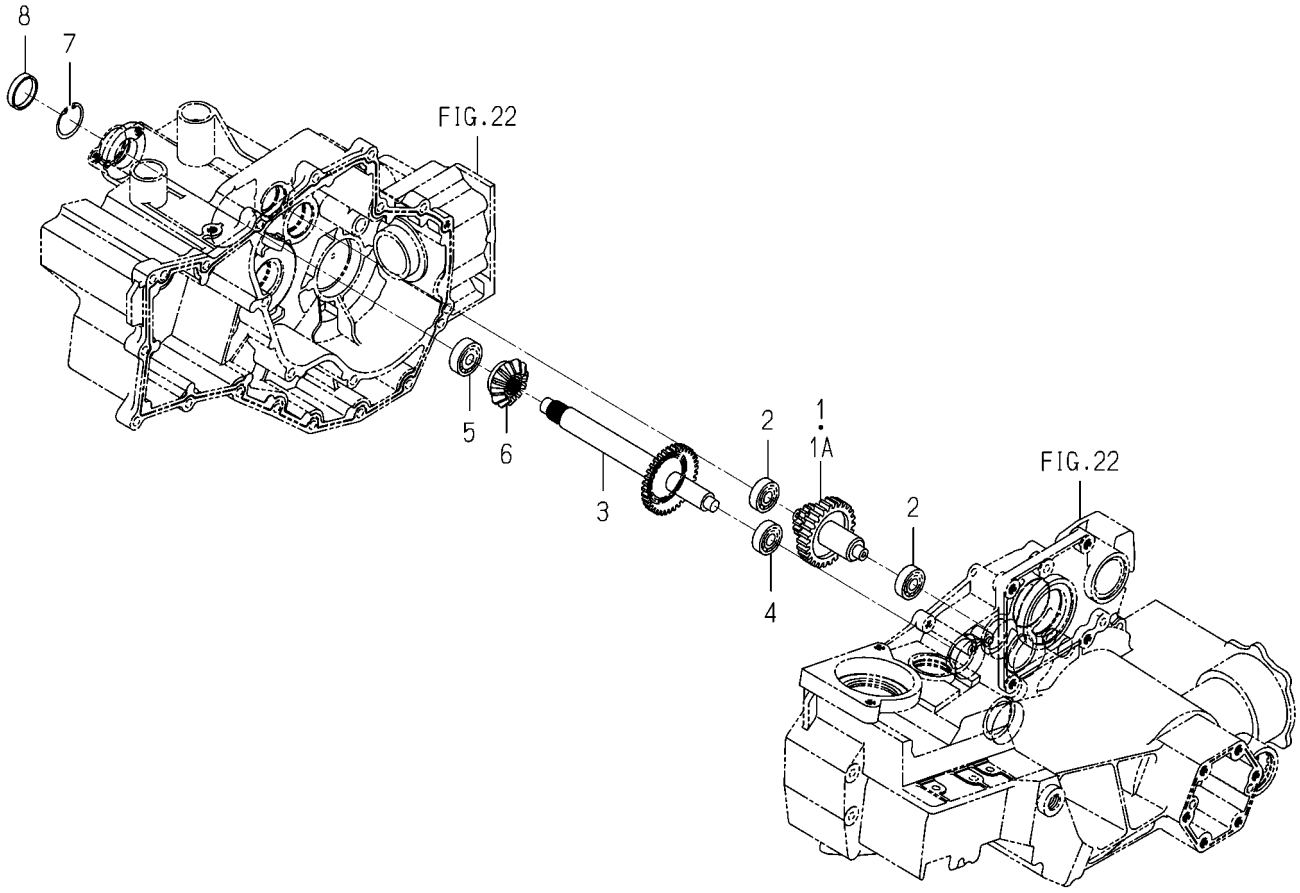

2213-209G-0100

KEY	PART CODE	DESCRIPTION	SPC	TYPE OF MODEL PZ80E16		ITC	COL	GRP	REMARKS
1	2213-209-230-00	SHAFT/DRIVE/8G COMP	*	1 -101811					
1A	2213-209-230-10	SHAFT/DRIVE/8G COMP	*	1 101812-		1			
2	V600-110-630-10	BEARING,RB/6301	*	2					
3	2213-209-530-00	SHAFT/COUNTER/8 COMP	*	1					
4	V600-110-630-10	BEARING,RB/6301	*	1					
5	V600-110-620-20	BEARING,RB/6202	*	1					
6	2213-211-002-00	GEAR/BEVEL/12/PZ8	*	1					
7	V705-140-035-00	RING,CIRCLIP	*	1					
8	3737-211-007-00	CAP/35	*	1					

FIG. 33 SHAFT(PLANTING/OUTPUT)SYSTEM

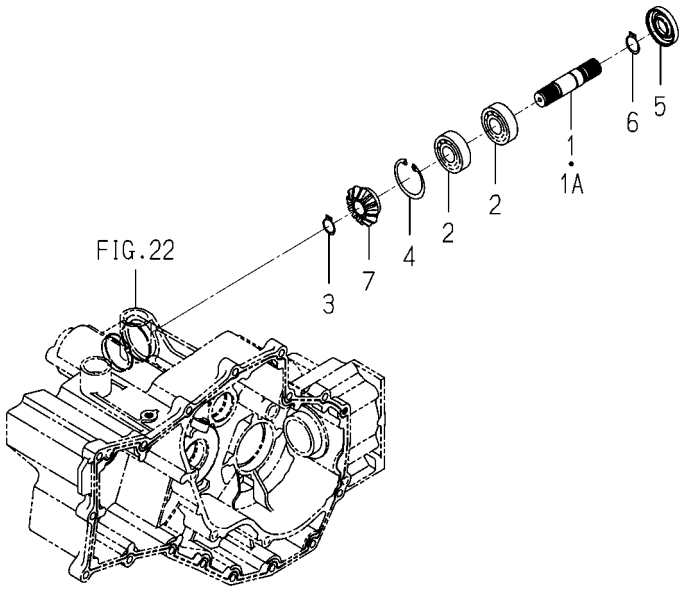

2213-211B-0100

KEY	PART CODE	DESCRIPTION	SPC	TYPE OF MODEL PZ80E16		ITC	COL	GRP	REMARKS
1	2213-211-001-00	SHAFT/PLANTING/OUT/P	*	1 -101649					
1A	2213-211-001-10	SHAFT/PLANTING/OUT/P	*	1 101650-		1			
2	V600-110-630-40	BEARING,RB/6304	*	2					
3	V704-140-018-00	RING,SNAP/18 C	*	1					
4	V705-140-052-00	RING,SNAP/52 C	*	1					
5	2213-211-003-00	SEAL/OIL	*	1					
6	V704-140-020-00	RING,SNAP/20C	*	1					
7	2213-211-002-00	GEAR/BEVEL/12/PZ8	*	1					

FIG. 34 SHIFTER(CHANGE)SYSTEM

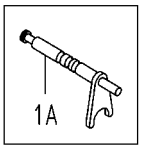

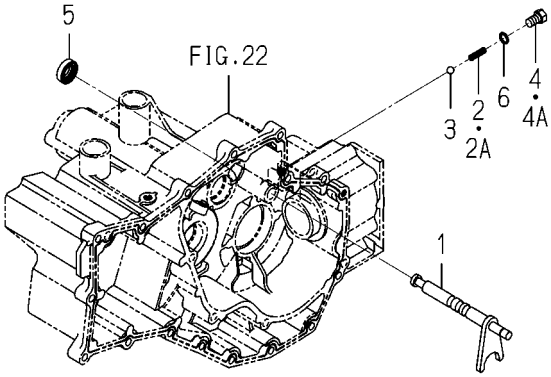

2204-212 -0100

KEY	PART CODE	DESCRIPTION	SPC	TYPE OF MODEL PZ80E16		ITC	COL	GRP	REMARKS
1	2204-212-200-10	STAY/SHIFT	*	1 -101649					
1A	2204-212-200-20	STAY/SHIFT	*	1 101650-		1			
2	2204-212-001-00	SPRING/HC025	*	1 -101046					
2A	2213-212-001-10	SPRING/HC024	*	1 101047-		1			
3	V682-200-001-00	BALL	*	1					
4	2161-211-003-00	BOLT	*	1 -101046					
4A	2201-201-002-00	BOLT/M10X12	*	1 101047-					
5	V744-114-280-70	SEAL,OIL	*	1					
6	V720-101-901-00	O-RING	*	1					

FIG. 35 PEDAL(DIFF-LOCK)SYSTEM

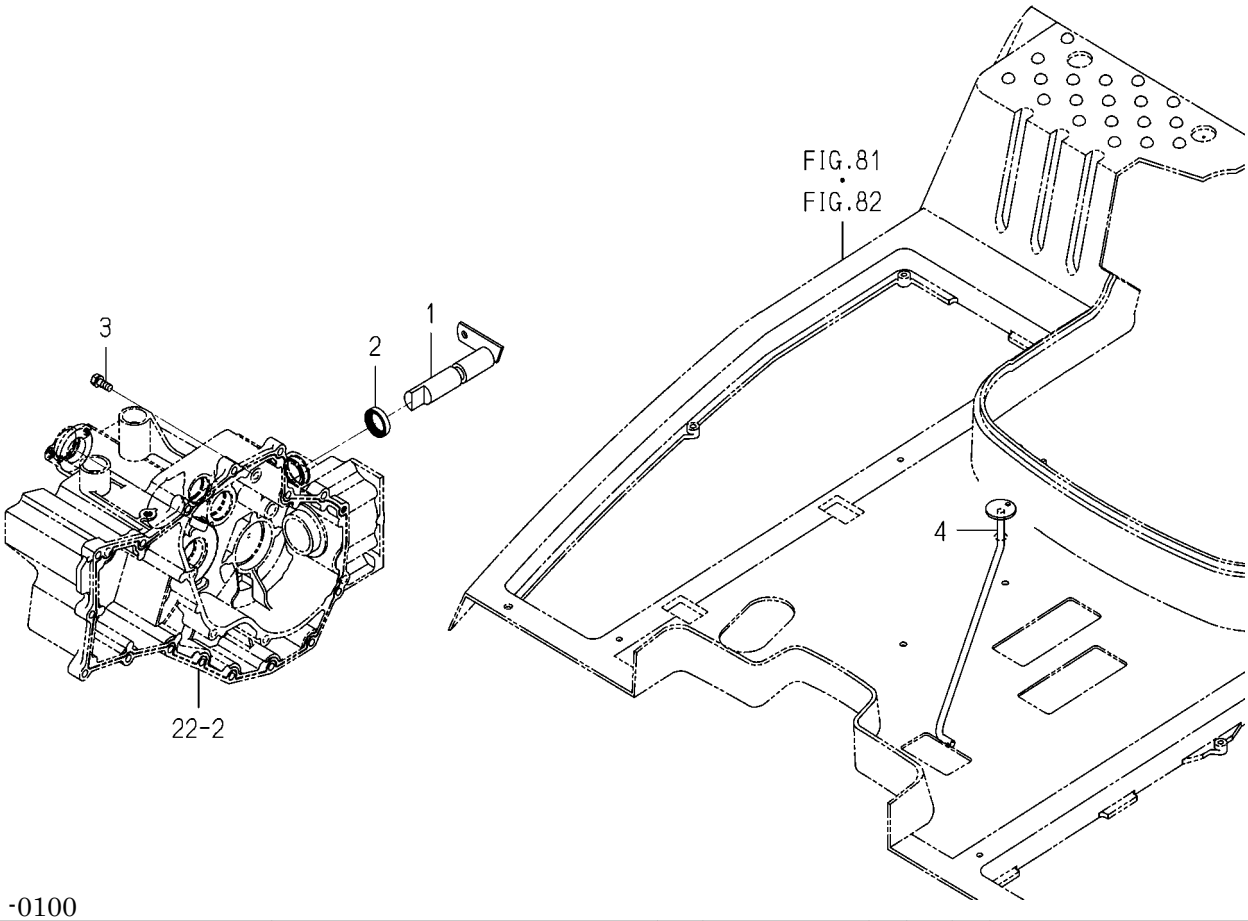

2213-215 -0100

KEY	PART CODE	DESCRIPTION	SPC	TYPE OF MODEL PZ80E16		ITC	COL	GRP	REMARKS
1	2204-215-200-10	SHAFT/DIFF LOCK/F	*	1					
2	V744-125-350-70	SEAL,OIL/TC25357	*	1					
3	2161-214-003-00	BOLT	*	1					
4	2213-215-210-00	PEDAL/DIFFLOCK	*	1					

FIG. 36 WHEEL(REAR)SYSTEM(D TYPE)

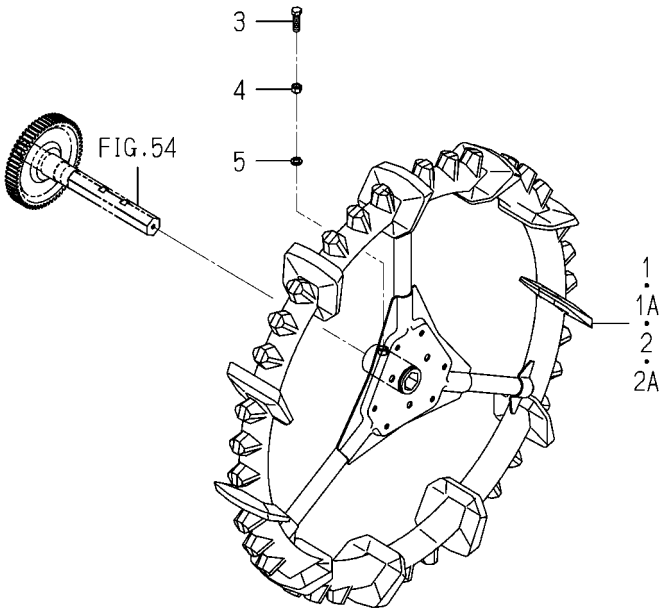

2213-222 -0100

KEY	PART CODE	DESCRIPTION	SPC	TYPE OF MODEL PZ80E16		ITC	COL	GRP	REMARKS
1	2213-222-220-00	WHEEL/950/LH COMP	*	1 -102260					
1A	2213-222-220-10	WHEEL/950/LH COMP	*	1 102261-		1			
2	2213-222-230-00	WHEEL/950/RH COMP	*	1 -102260					
2A	2213-222-230-10	WHEEL/950/RH COMP	*	1 102261-		1			
3	2204-222-001-00	BOLT/M12X45	*	2					
4	V304-260-012-00	NUT/M12	*	2					
5	V401-160-012-00	WASHER,SP/M12	*	2 -101649					

FIG. 37 WHEEL(REAR)SYSTEM(G TYPE)

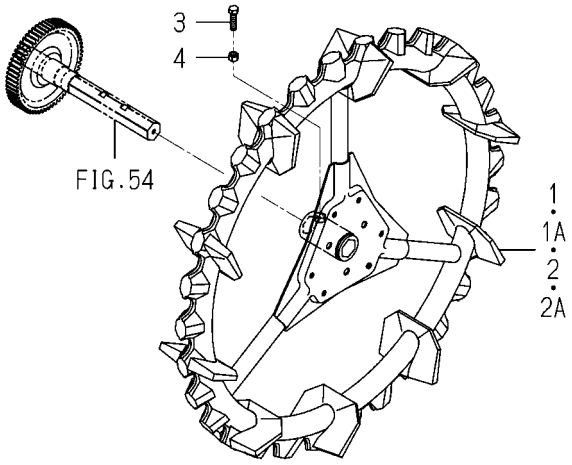

2190-226 -0100

KEY	PART CODE	DESCRIPTION	SPC	TYPE OF MODEL PZ80E16		ITC	COL	GRP	REMARKS
1	2190-226-220-20	WHEEL,900/LH	*	1 -102260					
1A	2190-226-220-30	WHEEL/REAR/900/LH	*	1 102261-		1			
2	2190-226-230-20	WHEEL,900/RH	*	1 -102260					
2A	2190-226-230-30	WHEEL/REAR/900/RH	*	1 102261-		1			
3	V201-361-204-00	BOLT/M12X40	*	2					
4	V304-260-012-00	NUT/M12	*	2					

FIG. 38 STEERING SYSTEM

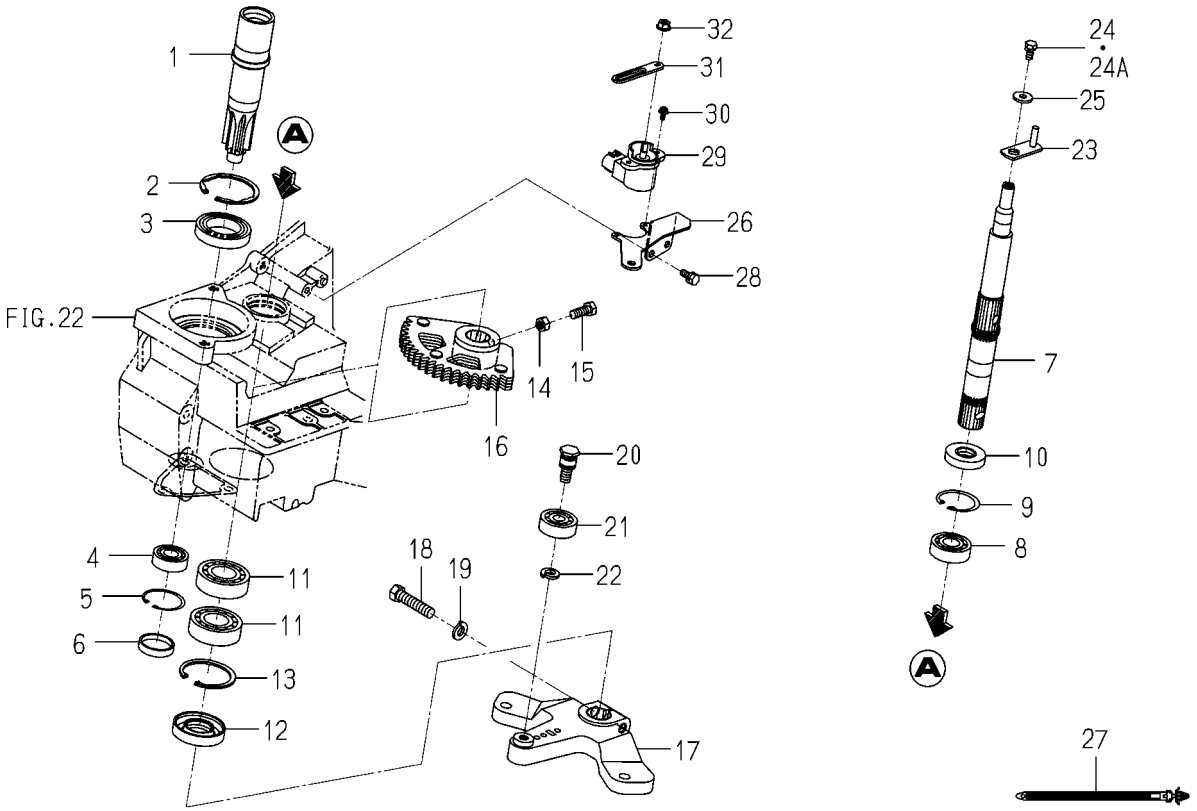

2213-302 -0100

KEY	PART CODE	DESCRIPTION	SPC	TYPE OF MODEL PZ80E16		ITC	COL	GRP	REMARKS
1	2204-302-220-10	SHAFT/STEERING/IN	*	1					
2	V707-140-055-00	RING/SNAP	*	1					
3	V600-110-690-70	BEARING	*	1					
4	V600-150-620-20	BEARING,RB/6202SS	*	1					
5	V705-140-035-00	RING,CIRCLIP	*	1					
6	3737-211-007-00	CAP/35	*	1					
7	2204-302-003-00	SHAFT/STERRING ARM	*	1					
8	V600-150-620-30	BEARING,RB/6203SS	*	1					
9	V705-140-040-00	RING,SNAP/40 C	*	1					
10	V744-117-400-80	SEAL,OIL/TC17408	*	1					
11	V600-110-620-50	BEARING,RB/6205	*	2					
12	V744-125-521-00	SEAL,OIL/TC255210	*	1					
13	V705-140-052-00	RING,SNAP/52 C	*	1					
14	V304-460-008-00	NUT/M8	*	1					
15	2204-302-008-00	BOLT(M8X25/9T)	*	1					
16	2204-302-200-10	GEAR,STERRING ARM	*	1					
17	2204-302-061-20	ARM,PITMAN/6HG	*	1					
18	V201-461-004-50	BOLT/M10X45	*	1					
19	V401-160-010-00	WASHER,SP/M10	*	1					
20	2204-302-025-00	BOLT/M10X26	*	1					
21	V600-150-630-10	BEARING,RB/6301SS	*	1					
22	V401-160-010-00	WASHER,SP/M10	*	1					
23	2204-302-210-00	ARM,STERRING SHAFT	*	1					
24	V210-260-601-00	BOLT/S M6X10	*	1 -100472					
24A	V210-260-601-20	BOLT/S	*	1 100473-					
25	4141-205-002-00	WASHER/07X19X02	*	1					
26	2204-302-006-00	BRACKET	*	1					
27	2204-537-002-00	BAND	*	1					
28	V210-260-601-60	BOLT/S	*	2					
29	1729-662-340-00	SENSOR/ANGLE/110/R	*	1					

FIG. 38 STEERING SYSTEM

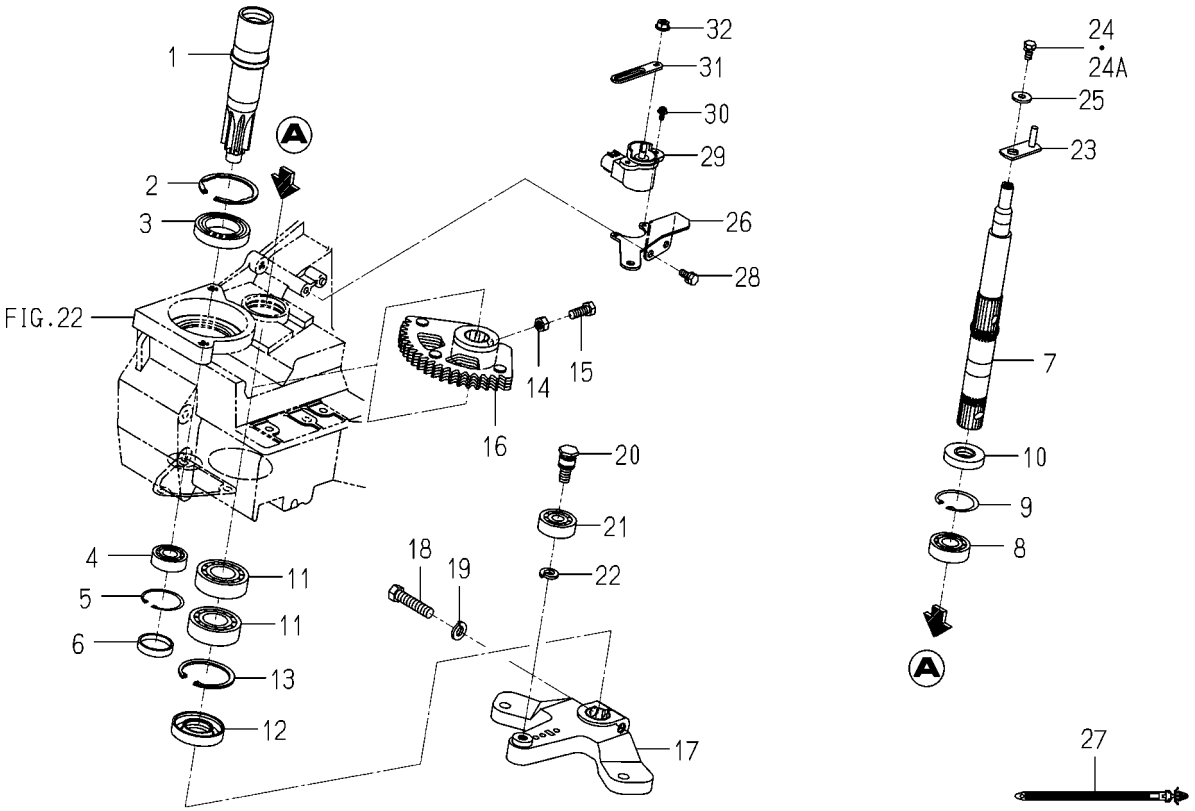

2213-302 -0100

KEY	PART CODE	DESCRIPTION	SPC	TYPE OF MODEL PZ80E16		ITC	COL	GRP	REMARKS
30	V120-364-001-00	SCREW/SP	*	2					
31	2204-302-005-00	ARM,SENSOR/STERRING	*	1					
32	V360-260-006-00	NUT/M6	*	1					

FIG. 39 ROD(TIE)SYSTEM

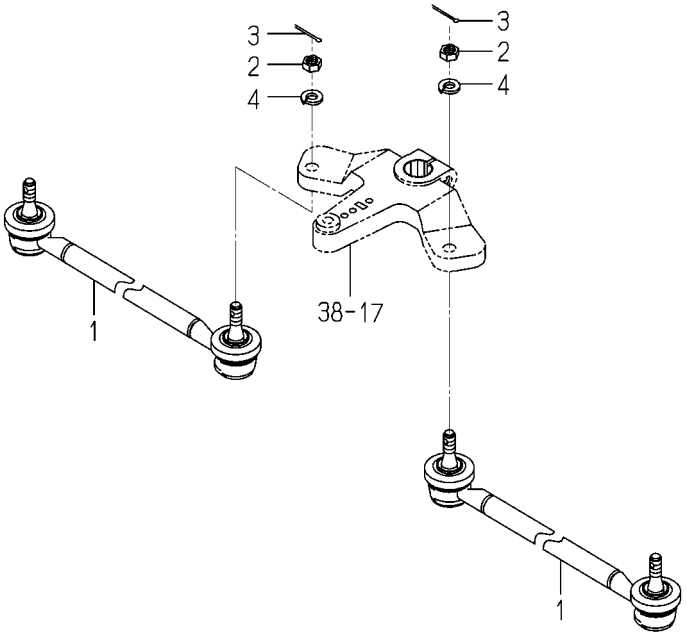

2204-303 -0100

KEY	PART CODE	DESCRIPTION	SPC	TYPE OF MODEL PZ80E16		ITC	COL	GRP	REMARKS
1	2204-303-250-10	ROD,TIE/6	*	2					
2	V335-260-010-00	NUT	*	4					
3	V500-162-502-50	PIN,SPLIT/2.5X25	*	4					
4	V401-160-010-00	WASHER,SP/M10	*	4					

FIG. 40 TURN SYSTEM

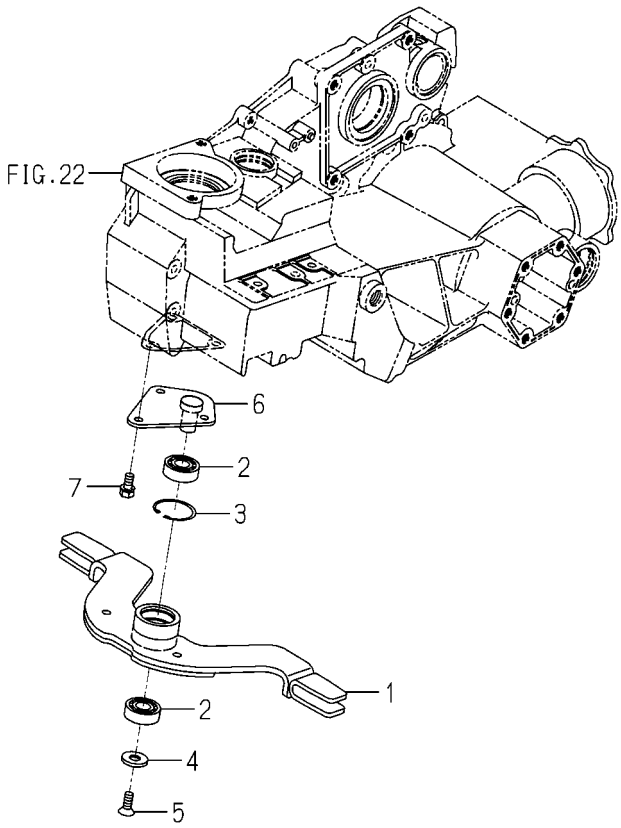

2213-304 -0100

KEY	PART CODE	DESCRIPTION	SPC	TYPE OF MODEL PZ80E16		ITC	COL	GRP	REMARKS
1	2213-304-200-20	PLATE/TURN COMP	*	1					
2	V600-350-620-20	BEARING,RB/6202RS	*	2					
3	V705-140-035-00	RING,CIRCLIP	*	1					
4	2204-304-011-00	WASHER/11X26X03	*	1					
5	2204-304-012-00	SCREW/SOCET/M8X20	*	1					
6	2204-304-210-40	BASE/CAM/AROUND TURN	*	1					
7	V211-260-801-60	BOLT,SEMS (S) M8X16	*	3					

FIG. 41 CASE(FINAL)SYSTEM(D TYPE)

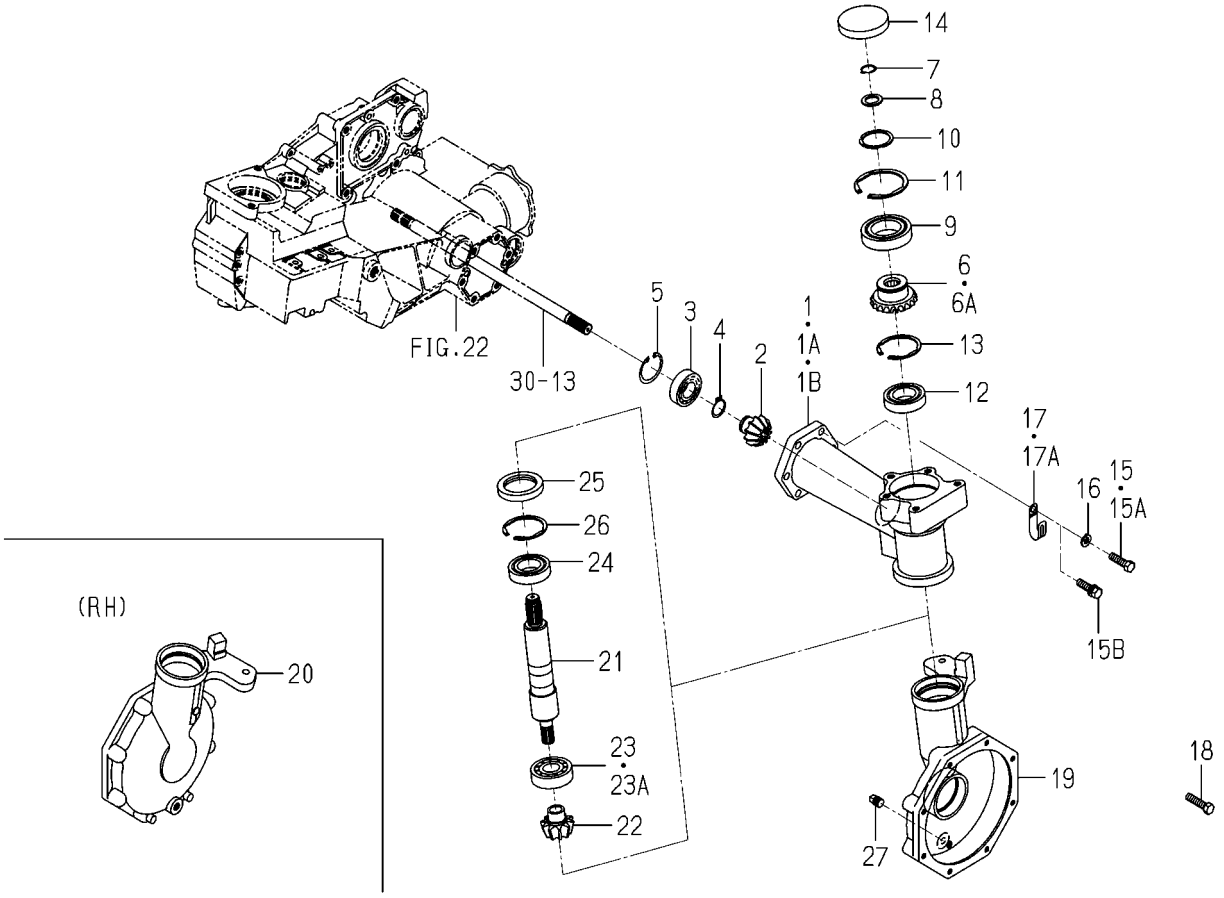

2213-310 -0100

KEY	PART CODE	DESCRIPTION	SPC	TYPE OF MODEL PZ80E16		ITC	COL	GRP	REMARKS
1	2213-310-001-00	CASE/FINAL/UPPER/8	*	2 -102017					
1A	2213-310-001-20	CASE/FINAL/UPPER/8	*	2 -102350		1			
1B	2213-310-001-30	CASE/FINAL/UPPER/8	*	2 102351-		1			
2	2204-310-005-30	GEAR/BEVEL/11	*	2					
3	V600-110-620-50	BEARING,RB/6205	*	2					
4	V704-140-025-00	RING,SNAP/25 C	*	2					
5	V705-140-045-00	RING,SNAP/45 C	*	2					
6	2204-310-004-30	GEAR/BEVEL/20	*	2 -101744					
6A	2204-310-004-40	GEAR/BEVEL/20	*	2 101745-		1			
7	V704-140-020-00	RING,SNAP/20C	*	2					
8	2130-755-002-00	WASHER,STAND SPRING	*	2					
9	V600-110-600-90	BEARING,RB/6009	*	2					
10	V706-140-045-00	RING/SNAP	*	2					
11	V707-140-075-00	RING/SNAP	*	2					
12	1617-244-004-00	BEARING/BALL	*	2					
13	V707-140-062-00	RING/SNAP	*	2					
14	2144-310-005-00	CAP,METAL	*	2					
15	V201-361-003-50	BOLT/M10X35	*	12 -102000					
15A	V201-461-003-50	BOLT/M10X35	*	12 -102262					
15B	2204-310-021-00	BOLT/SEAL/M10X35/S	*	12 102263-					
16	V401-160-010-00	WASHER,SP/M10	*	12 -102262					
17	3737-172-011-00	CLAMP,HARNESS	*	1 -101757					
17A	3737-172-011-00	CLAMP,HARNESS	*	2 101758-					
18	V201-361-004-00	BOLT/M10X40	*	2 -101649					
19	2213-312-002-20	CASE/ROWER/8/LH	*	1					
20	2213-312-003-20	CASE/ROWER/8/RH	*	1					
21	2213-310-003-10	SHAFT/KINGPIN/8	*	2					
22	2213-312-007-20	GEAR/BEVEL/10	*	2					
23	V600-110-630-50	BEARING,RB/6305	*	2 -101649					
23A	1594-218-001-00	BEARING/BALL 6305SH2	*	2 101650-					

FIG. 41 CASE(FINAL)SYSTEM(D TYPE)

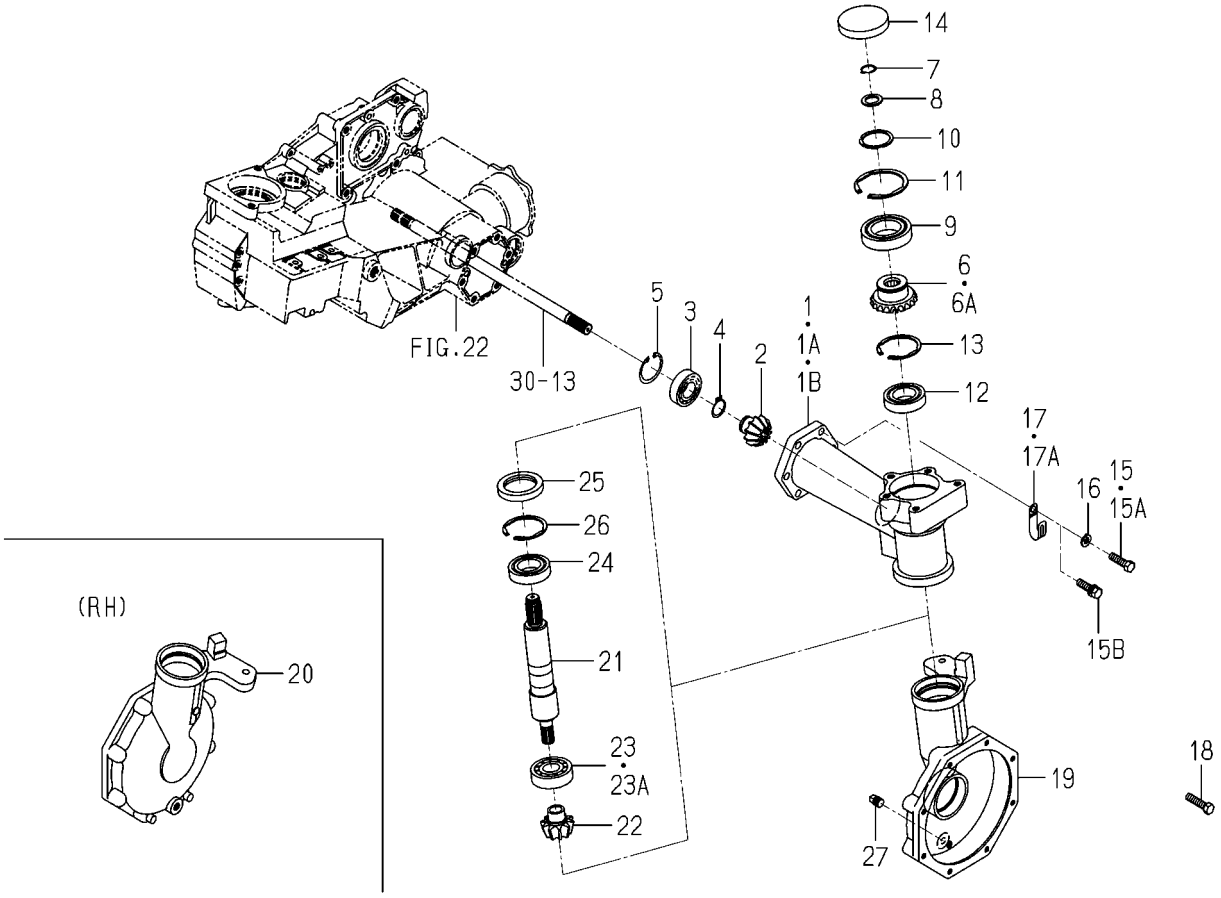

2213-310 -0100

KEY	PART CODE	DESCRIPTION	SPC	TYPE OF MODEL PZ80E16		ITC	COL	GRP	REMARKS
24	1617-244-004-00	BEARING/BALL	*	2					
25	2204-310-007-00	SEAL,OIL/TC506810	*	2					
26	V707-140-062-00	RING/SNAP	*	2					
27	V781-160-000-4B	PLUG/SCREW/SEAL	*	2					

FIG. 42 CASE(FINAL)SYSTEM(G TYPE)

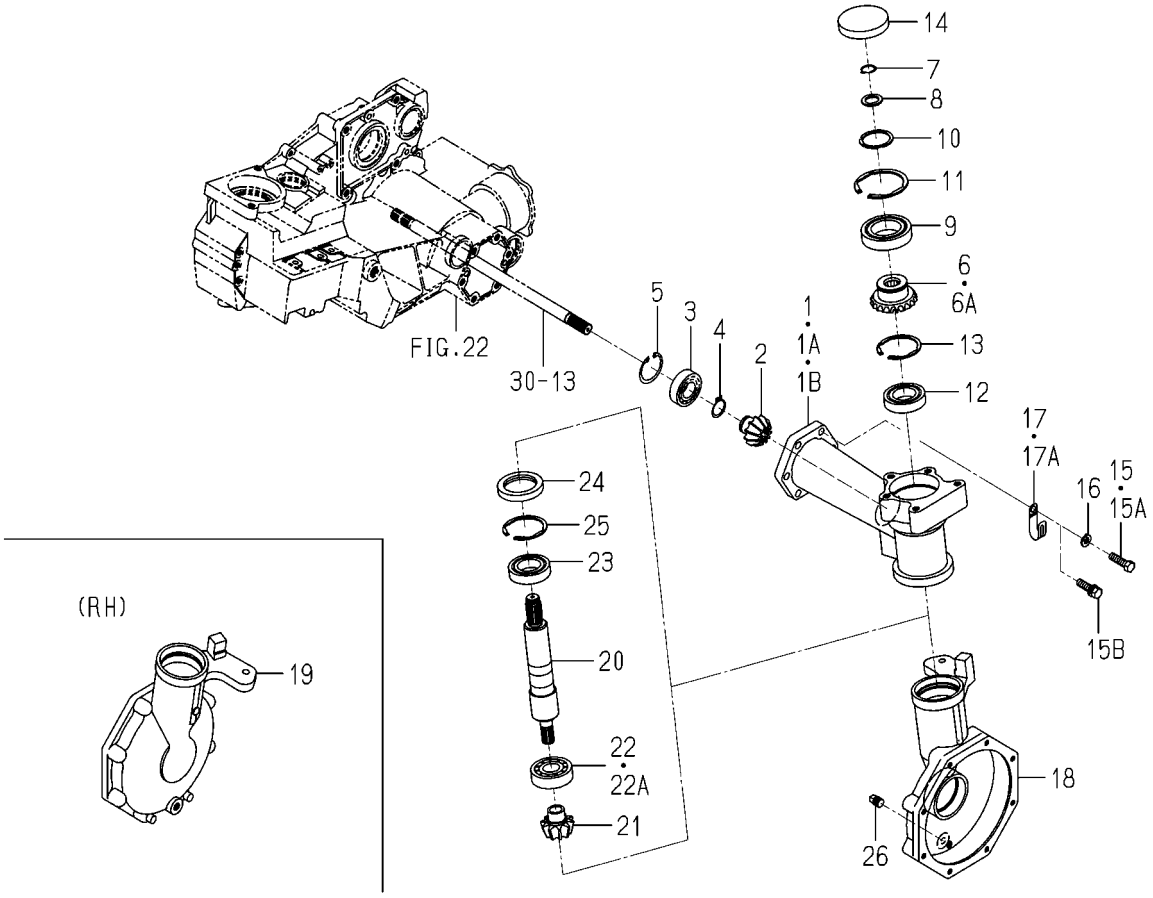

2213-310G-0100

KEY	PART CODE	DESCRIPTION	SPC	TYPE OF MODEL PZ80E16		ITC	COL	GRP	REMARKS
1	2213-310-001-00	CASE/FINAL/UPPER/8	*	2 -102017					
1A	2213-310-001-20	CASE/FINAL/UPPER/8	*	2 -102350		1			
1B	2213-310-001-30	CASE/FINAL/UPPER/8	*	2 102351-		1			
2	2204-310-005-30	GEAR/BEVEL/11	*	2					
3	V600-110-620-50	BEARING,RB/6205	*	2					
4	V704-140-025-00	RING,SNAP/25 C	*	2					
5	V705-140-045-00	RING,SNAP/45 C	*	2					
6	2204-310-004-30	GEAR/BEVEL/20	*	2 -101744					
6A	2204-310-004-40	GEAR/BEVEL/20	*	2 101745-		1			
7	V704-140-020-00	RING,SNAP/20C	*	2					
8	2130-755-002-00	WASHER,STAND SPRING	*	2					
9	V600-110-600-90	BEARING,RB/6009	*	2					
10	V706-140-045-00	RING/SNAP	*	2					
11	V707-140-075-00	RING/SNAP	*	2					
12	1617-244-004-00	BEARING/BALL	*	2					
13	V707-140-062-00	RING/SNAP	*	2					
14	2144-310-005-00	CAP,METAL	*	2					
15	V201-361-003-50	BOLT/M10X35	*	12 -102000					
15A	V201-461-003-50	BOLT/M10X35	*	12 -102262					
15B	2204-310-021-00	BOLT/SEAL/M10X35/S	*	12 102263-					
16	V401-160-010-00	WASHER,SP/M10	*	12 -102262					
17	3737-172-011-00	CLAMP,HARNESS	*	1 -101757					
17A	3737-172-011-00	CLAMP,HARNESS	*	2 101758-					
18	2213-312-002-20	CASE/ROWER/8/LH	*	1					
19	2213-312-003-20	CASE/ROWER/8/RH	*	1					
20	2213-310-003-10	SHAFT/KINGPIN/8	*	2					
21	2213-312-008-20	GEAR/BEVEL/10/G	*	2					
22	V600-110-630-50	BEARING,RB/6305	*	2 -101649					
22A	1594-218-001-00	BEARING/BALL 6305SH2	*	2 101650-					
23	1617-244-004-00	BEARING/BALL	*	2					

FIG. 42 CASE(FINAL)SYSTEM(G TYPE)

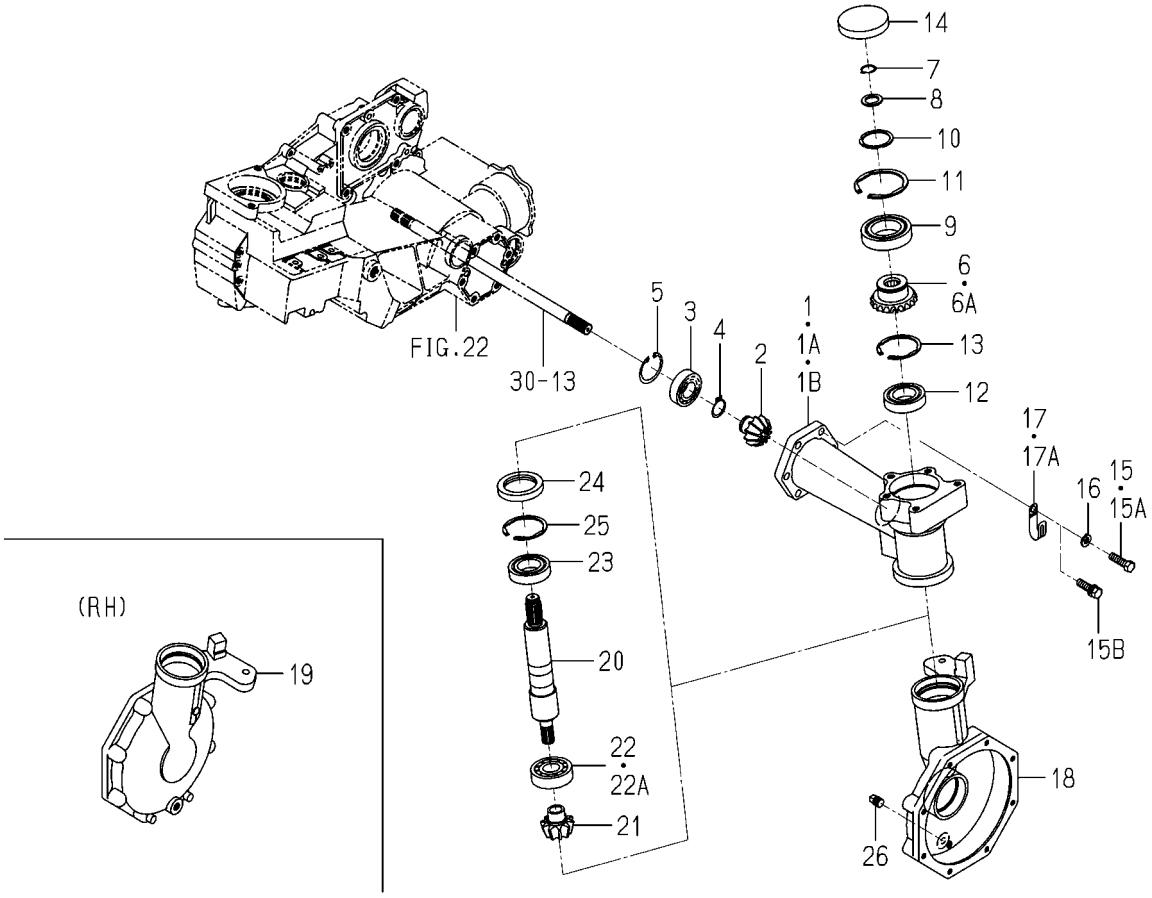

2213-310G-0100

KEY	PART CODE	DESCRIPTION	SPC	TYPE OF MODEL PZ80E16		ITC	COL	GRP	REMARKS
24	2204-310-007-00	SEAL,OIL/TC506810	*	2					
25	V707-140-062-00	RING/SNAP	*	2					
26	V781-160-000-4B	PLUG/SCREW/SEAL	*	2					

FIG. 43 SHAFT(WHEEL/FRONT)SYSTEM(D TYPE)

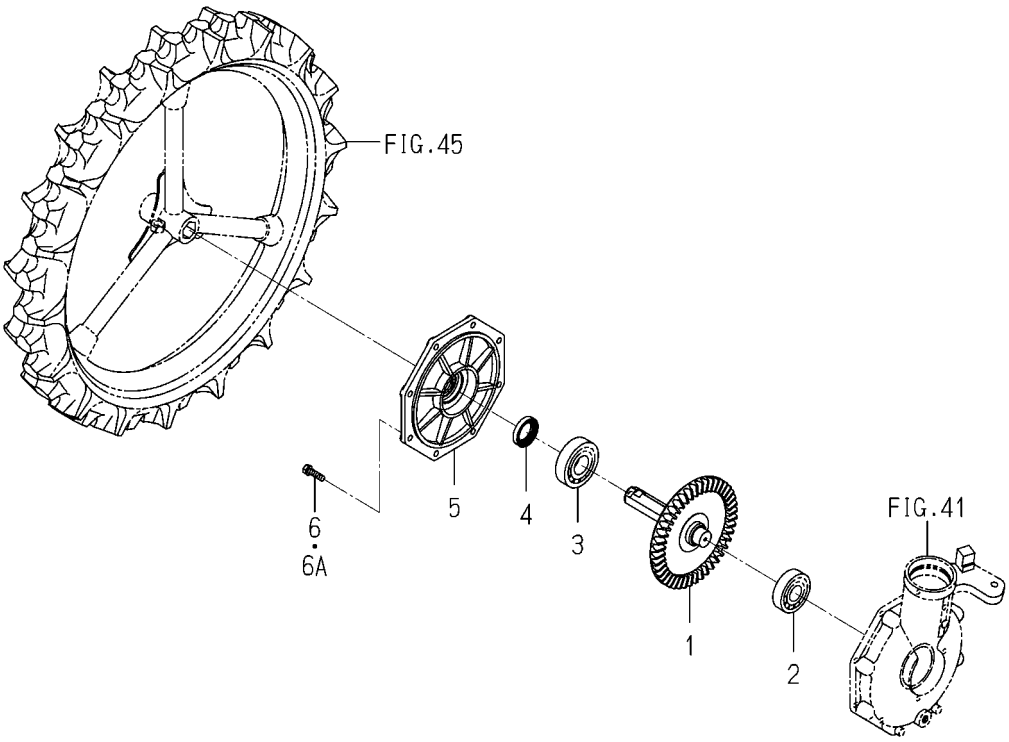

2213-312 -0100

KEY	PART CODE	DESCRIPTION	SPC	TYPE OF MODEL PZ80E16		ITC	COL	GRP	REMARKS
1	2213-312-250-20	SHAFT/FRONT WHEEL/8D	*	2					
2	1594-218-001-00	BEARING/BALL 6305SH2	*	2					
3	V600-110-630-60	BEARING,RB/6306	*	2					
4	2157-338-007-00	SEAL,OIL/SDD730508	*	2					
5	2213-312-001-00	COVER/FINALCASE/PZ8	*	2					
6	2144-201-005-00	BOLT	*	16 -102041					
6A	2213-312-013-00	BOLT/SEAL/M8X30X9T	*	16 102042-					

FIG. 44 SHAFT(WHEEL/FRONT)SYSTEM(G TYPE)

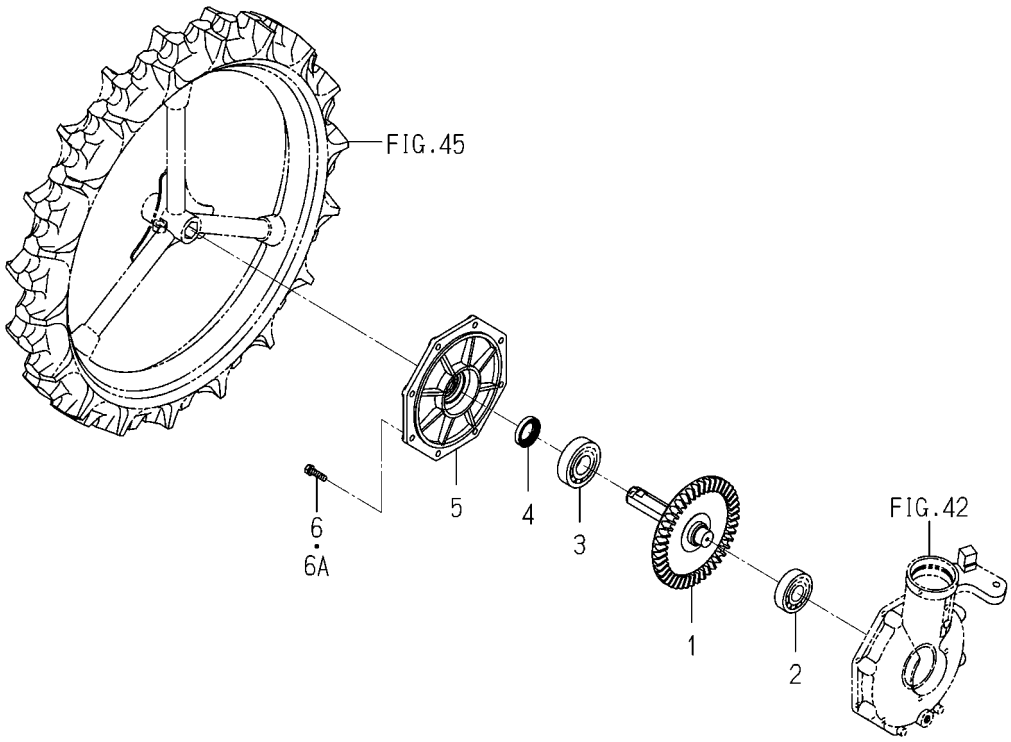

2213-312G-0100

KEY	PART CODE	DESCRIPTION	SPC	TYPE OF MODEL PZ80E16		ITC	COL	GRP	REMARKS
1	2213-312-200-10	SHAFT/FRONT WHEEL/8G	*	2					
2	V600-110-630-50	BEARING,RB/6305	*	2					
3	V600-110-630-60	BEARING,RB/6306	*	2					
4	2157-338-007-00	SEAL,OIL/SDD730508	*	2					
5	2213-312-001-00	COVER/FINALCASE/PZ8	*	2					
6	2144-201-005-00	BOLT	*	16 -102041					
6A	2213-312-013-00	BOLT/SEAL/M8X30X9T	*	16 102042-					

FIG. 45 WHEEL(FRONT)SYSTEM

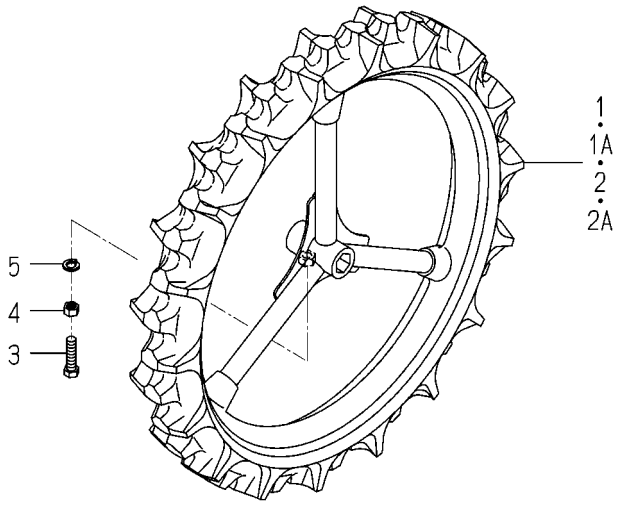

2213-316 -0100

KEY	PART CODE	DESCRIPTION	SPC	TYPE OF MODEL PZ80E16		ITC	COL	GRP	REMARKS
1	2190-316-200-10	TIRE/650/90/LH	*	1 -102260					
1A	2190-316-200-20	WHEEL/FRONT/650/90/L	*	1 102261-		1			
2	2190-316-210-10	TIRE/650/90/RH	*	1 -102260					
2A	2190-316-210-20	WHEEL/FRONT/650/90/R	*	1 102261-		1			
3	2204-222-001-00	BOLT/M12X45	*	2					
4	V304-260-012-00	NUT/M12	*	2					
5	V401-160-012-00	WASHER,SP/M12	*	2 -101649					

FIG. 46 CAP(WHEEL/FRONT)SYSTEM

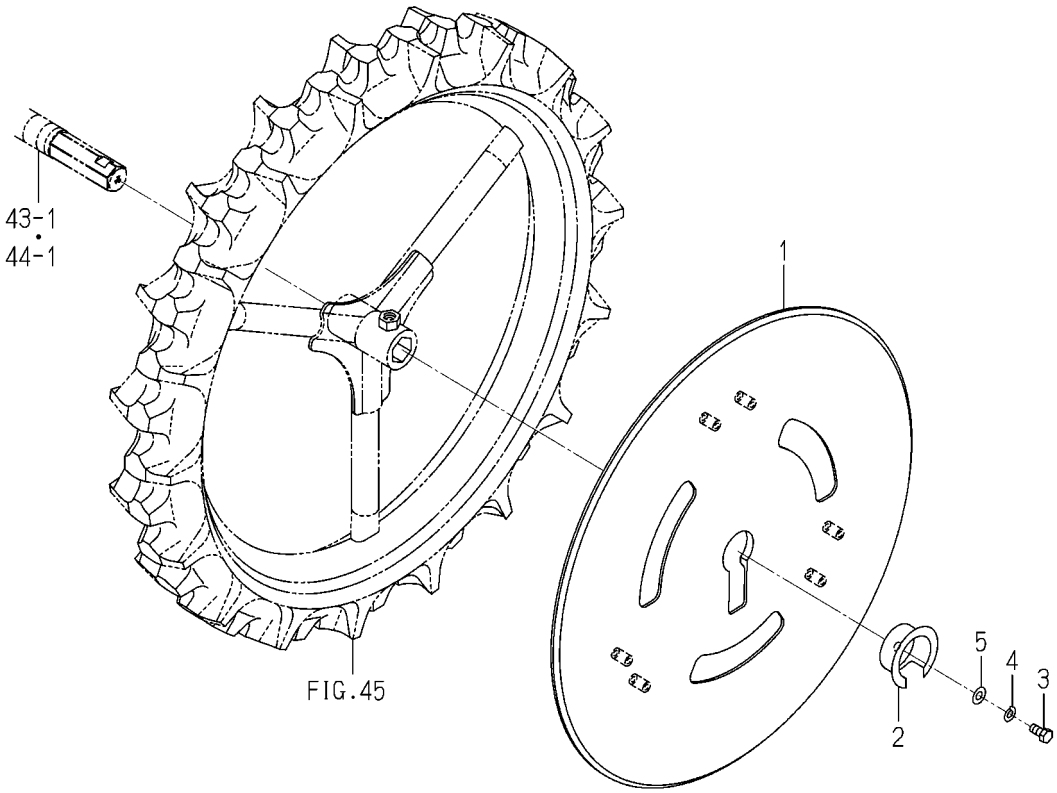

2213-317 -0100

KEY	PART CODE	DESCRIPTION	SPC	TYPE OF MODEL PZ80E16		ITC	COL	GRP	REMARKS
1	2213-317-001-00	CAP/FRONTWHEEL/PZ80	*	2					
2	2213-317-002-10	COLLAR/WHEELCAP	*	2					
3	V201-360-801-60	BOLT/M8X16	*	2					
4	V401-160-008-00	WASHER,SP/M 8	*	2					
5	V411-260-008-00	WASHER,PL/M 8	*	2					

FIG. 47 FRAME(MAIN)SYSTEM(G TYPE)

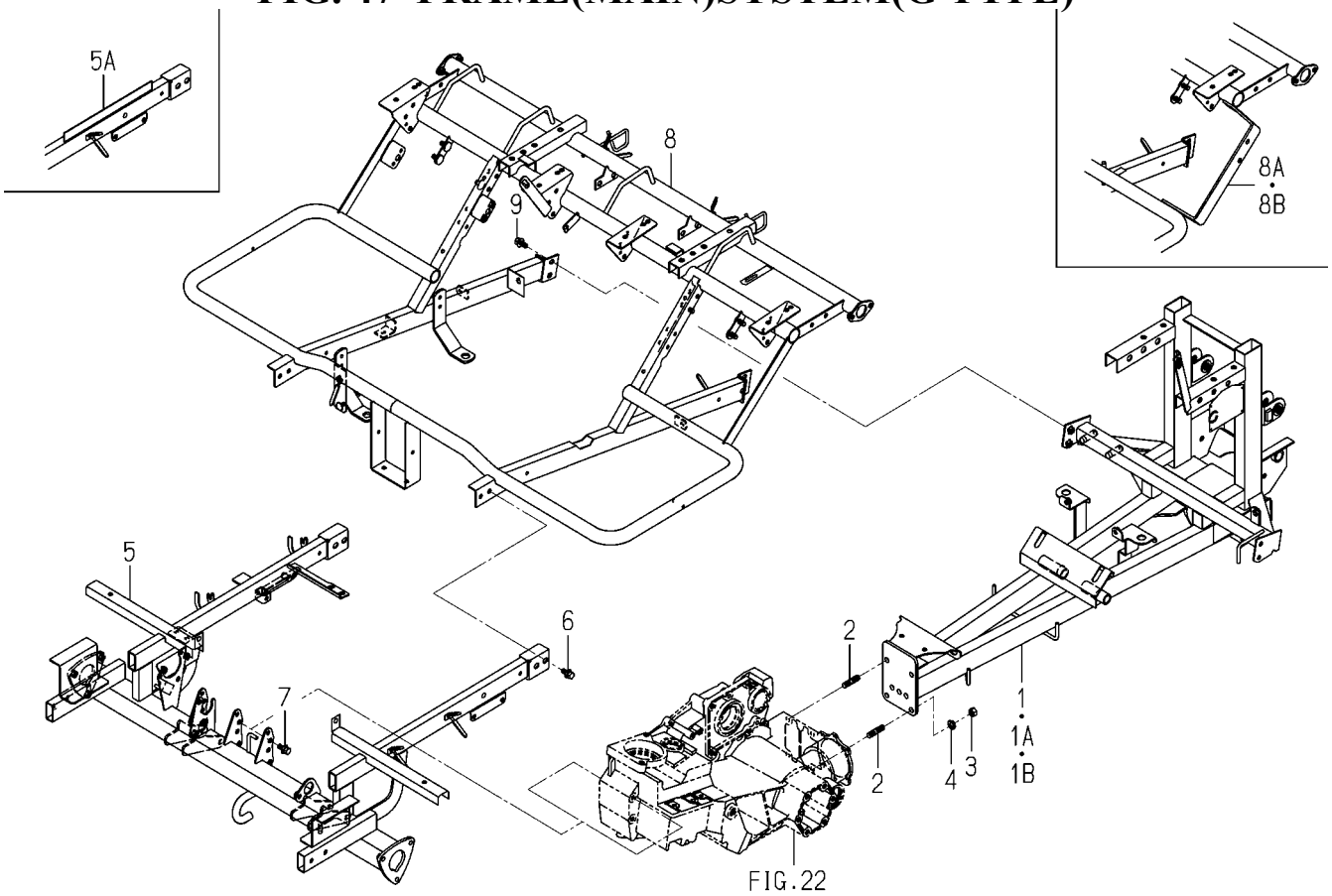

2213-320H-0100

KEY	PART CODE	DESCRIPTION	SPC	TYPE OF MODEL PZ80E16		ITC	COL	GRP	REMARKS
1	2213-320-280-00	FRAME/MAIN/8G/K COMP	*	1 -101744					
1A	2213-320-280-20	FRAME/MAIN/8G/K COMP	*	1 -102399		1			
1B	2213-320-280-30	FRAME/MAIN/8G/K COMP	*	1 102400-		1			
2	V252-461-002-50	PLANTING/BT/9T	*	4					
3	V304-460-010-00	NUT/M10	*	4					
4	V401-160-010-00	WASHER,SP/M10	*	4					
5	2213-320-350-80	FRAME(UPPER/FRONT)	*	1 -102260					
5A	2213-320-420-40	FRAME(UPPER/FRONT)	*	1 102261-		1			
6	V211-360-802-00	BOLT/SP	*	14					
7	V211-660-802-00	BOLT/8X20	*	6 101650-					
8	2213-320-600-20	FRAME/UPPER/REAR/8G	*	1 -100349					
8A	2213-320-600-80	FRAME/UPPER/REAR/8G	*	1 -102399		1			
8B	2213-320-600-90	FRAME/UPPER/REAR/8G	*	1 102400-		1			
9	V211-260-802-00	BOLT/S	*	10					

FIG. 48 FRAME(MAIN)SYSTEM(D TYPE)

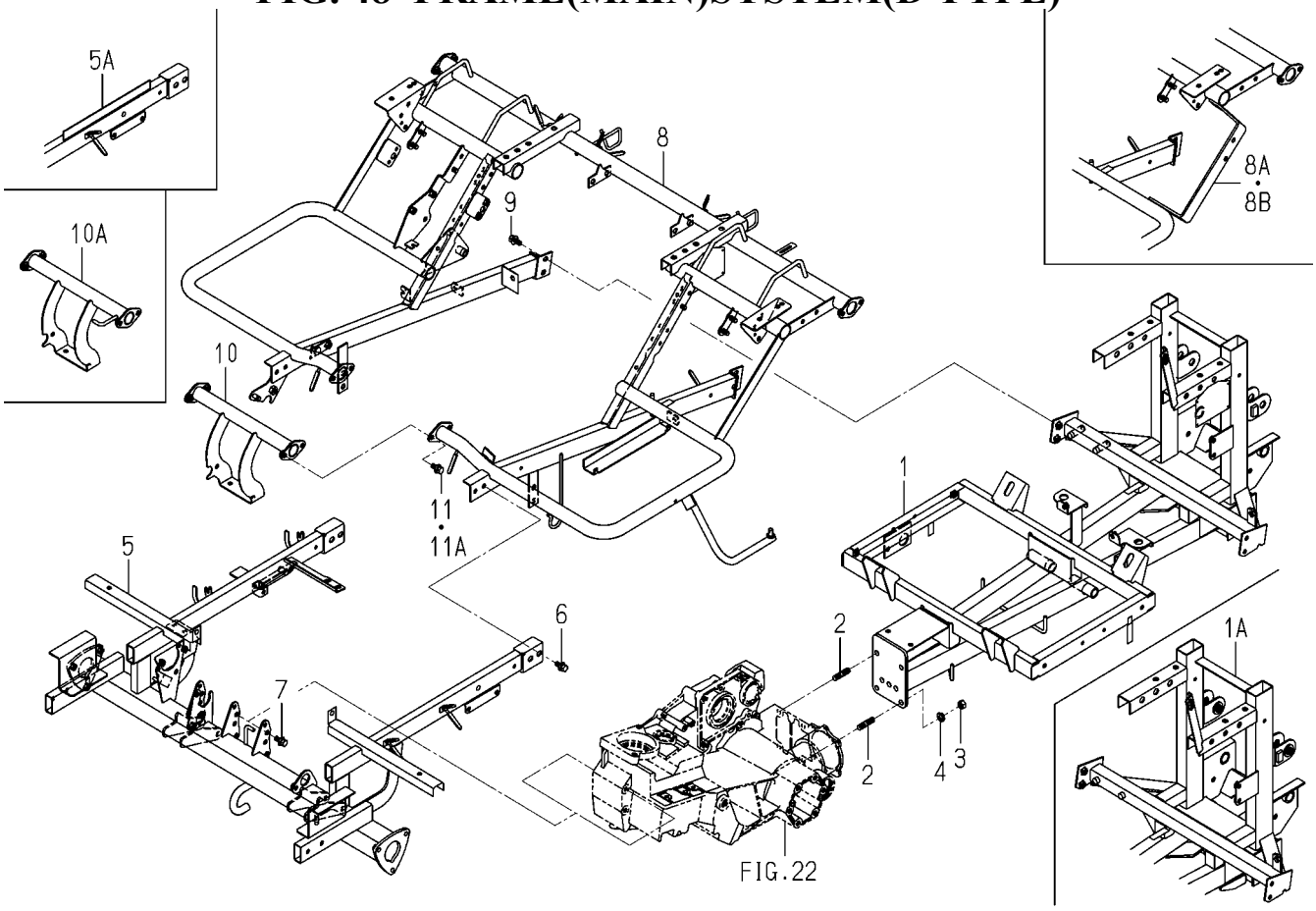

2213-320K-0100

KEY	PART CODE	DESCRIPTION	SPC	TYPE OF MODEL PZ80E16		ITC	COL	GRP	REMARKS
1	2213-320-270-10	FRAME/MAIN/8K COMP	*	1 -101046		3			
1A	2213-320-200-80	FRAME/MAIN/8D COMP	*	1 101047-					
2	V252-461-002-50	PLANTING/BT/9T	*	4					
3	V304-460-010-00	NUT/M10	*	4					
4	V401-160-010-00	WASHER,SP/M10	*	4					
5	2213-320-350-80	FRAME(UPPER/FRONT)	*	1 -102260					
5A	2213-320-420-40	FRAME(UPPER/FRONT)	*	1 102261-		1			
6	V211-360-802-00	BOLT/SP	*	14					
7	V211-660-802-00	BOLT/8X20	*	6 101650-					
8	2213-320-520-00	FRAME/UPPER/REAR/8K	*	1 -100349					
8A	2213-320-520-50	FRAME/UPPER/REAR/8K	*	1 -102399		1			
8B	2213-320-520-60	FRAME/UPPER/REAR/8K	*	1 102400-		1			
9	V211-360-802-00	BOLT/SP	*	16					
10	2213-320-320-00	STAY/CENTER	*	1 -100349					
10A	2213-320-320-10	STAY/CENTER	*	1 100350-		1			
11	V211-260-802-00	BOLT/S	*	4 -101649					
11A	V211-360-802-00	BOLT/SP	*	4 101650-					

FIG. 49 SHAFT(DRIVE/REAR)SYSTEM

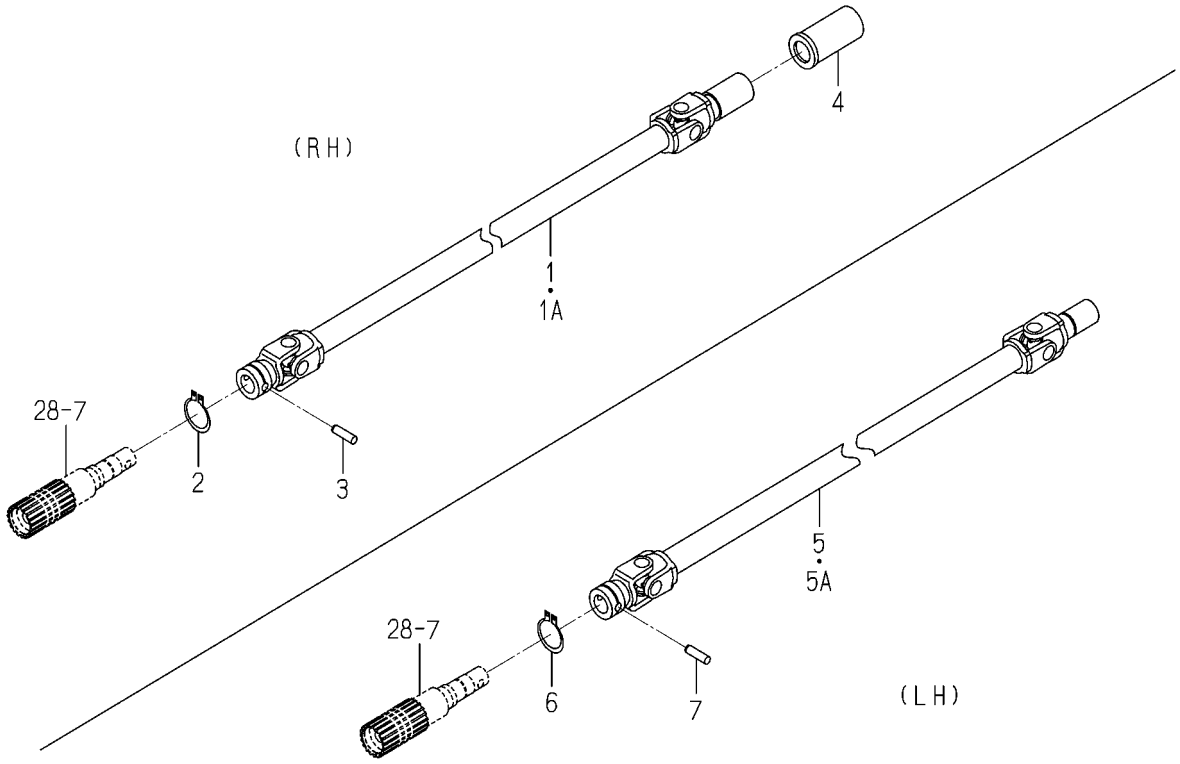

2213-321N-0100

KEY	PART CODE	DESCRIPTION	SPC	TYPE OF MODEL PZ80E16		ITC	COL	GRP	REMARKS
1	2213-321-310-10	JOINT/REAR/8D	*	1 -102213		1			
1A	2213-321-310-20	JOINT/REAR/8D	*	1 102214-		1			
2	V704-140-032-00	RING,SNAP/32 C	*	1					
3	2161-321-001-00	PIN STRAIGHT	*	1					
4	2194-321-001-00	BOOT,DRIVE SHAFT	*	1					
5	2213-321-320-10	JOINT/REA/8/R0TARY	*	1 -102213		1			
5A	2213-321-320-20	JOINT/REA/8/R0TARY	*	1 102214-		1			
6	V704-140-032-00	RING,SNAP/32 C	*	1					
7	2161-321-001-00	PIN STRAIGHT	*	1					

FIG. 50 SHAFT(PLANTING)SYSTEM

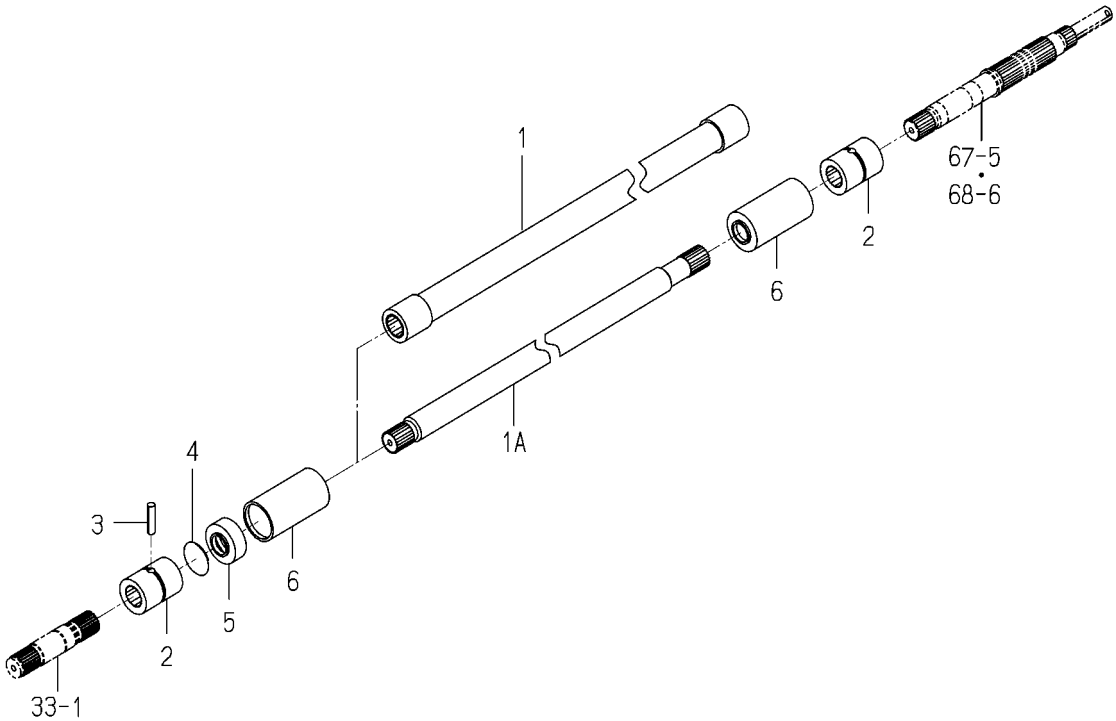

2213-322 -0100

KEY	PART CODE	DESCRIPTION	SPC	TYPE OF MODEL PZ80E16		ITC	COL	GRP	REMARKS
1	2213-322-200-00	SHAFT/PLANTING DRIVE	*	1 -101046					
1A	2213-322-001-00	SHAFT/PLANTING/8	*	1 101047-					
2	2200-322-003-00	COUPLING/32X44	*	2					
3	V580-140-602-80	PIN,SPRING/6 X28 W	*	1					
4	2200-322-007-00	RING,CUPLING/P	*	1					
5	2200-322-005-00	BOOT,COUPLING/A	*	1					
6	2200-322-006-00	BOOT,COUPLING/B	*	2					

FIG. 51 FRAME(ROLLING)SYSTEM

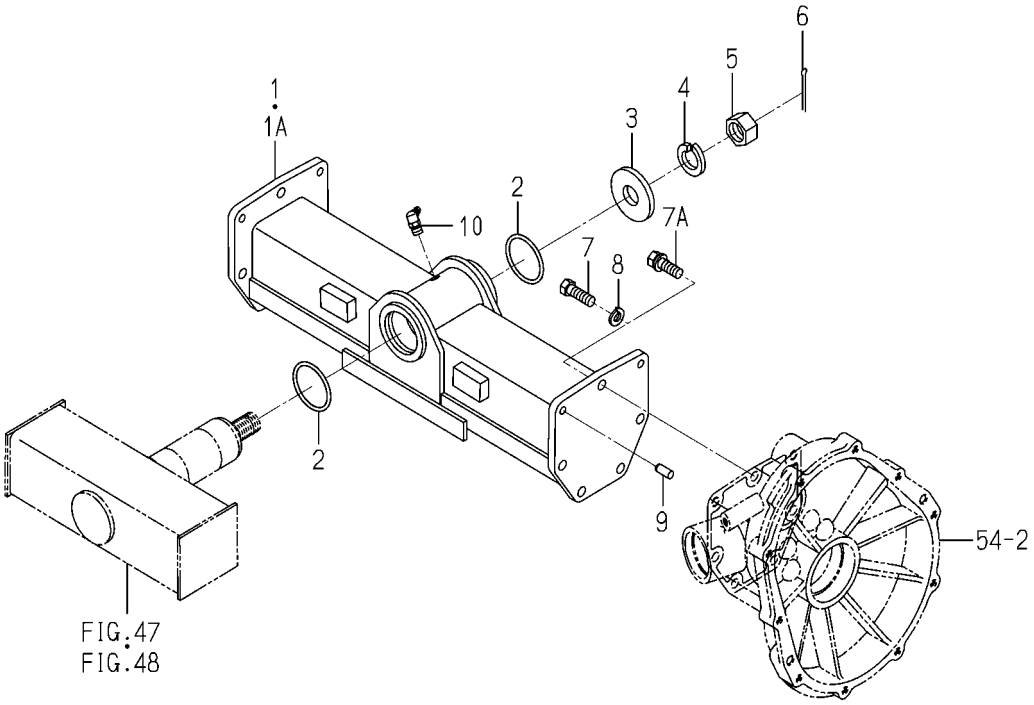

2213-323D-0100

KEY	PART CODE	DESCRIPTION	SPC	TYPE OF MODEL PZ80E16		ITC	COL	GRP	REMARKS
1	2213-323-300-20	FRAME/ROLLING/8 COMP	*	1 -101649					
1A	2213-323-300-40	FRAME/ROLLING/8 COMP	*	1 101650-		1			
2	V720-103-504-50	O-RING/P45	*	2					
3	2161-323-001-10	WASHER	*	1					
4	V401-160-020-00	WASHER,SP/M20	*	1					
5	V334-260-020-00	NUT	*	1					
6	V500-164-004-00	PIN,SPLIT/4 X40	*	1					
7	2139-221-003-00	BOLT M10X30	*	10 -102262					
7A	2204-323-011-00	BOLT/SEAL/M10X30/S	*	10 102263-					
8	V401-160-010-00	WASHER,SP/M10	*	10 -102262					
9	V522-100-801-80	PIN	*	4					
10	V763-150-000-00	NIPPLE,GREASE/PT1/8	*	1					

FIG. 52 SHAFT(BRAKE)SYSTEM(NO.100001-102165)

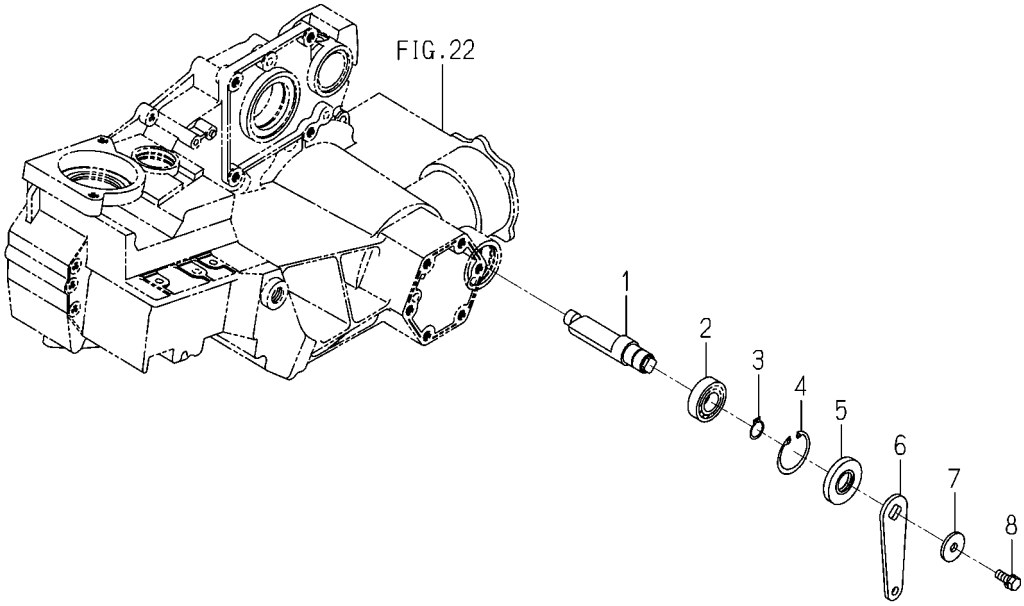

2204-325 -0100

KEY	PART CODE	DESCRIPTION	SPC	TYPE OF MODEL PZ80E16		ITC	COL	GRP	REMARKS
1	2204-325-001-00	SHAFT/BRAKE	*	2 -102165					
2	V600-110-600-40	BEARING,RB/6004	*	2 -102165					
3	V704-140-020-00	RING,SNAP/20C	*	2 -102165					
4	V705-140-042-00	RING,SNAP/42 C	*	2 -102165					
5	V744-120-470-70	SEAL/OIL	*	2 -102165					
6	2204-325-002-00	ARM,BRAKE	*	2 -102165					
7	3740-314-017-00	WASHER,TENSION	*	2 -102165					
8	V211-560-802-00	BOLT/M8X20	*	2 -102165					

FIG. 53 SHAFT(BRAKE)SYSTEM(NO.102166-)

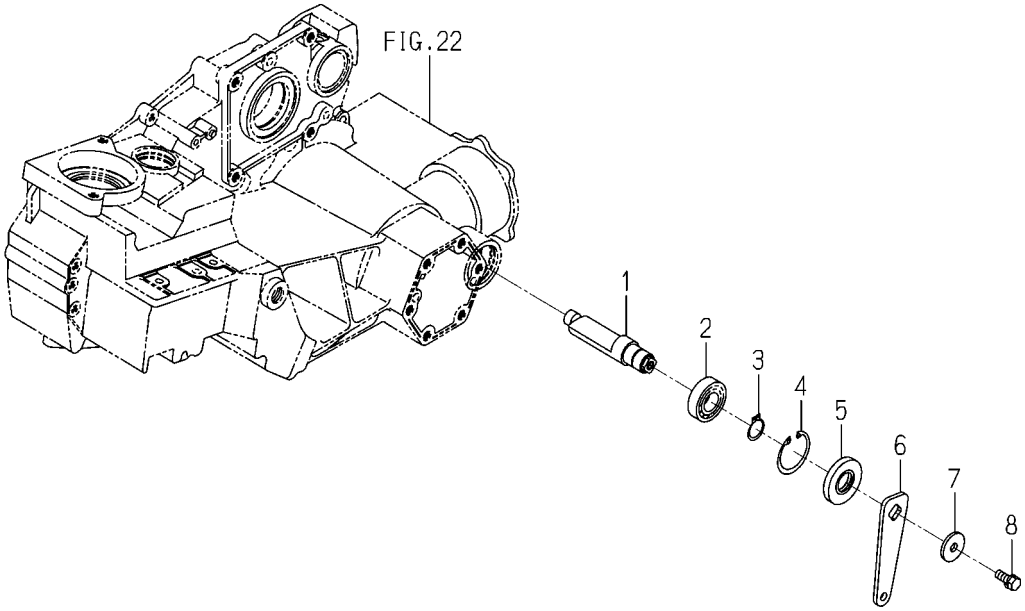

2221-325 -0100

KEY	PART CODE	DESCRIPTION	SPC	TYPE OF MODEL PZ80E16		ITC	COL	GRP	REMARKS
1	2204-325-001-00	SHAFT/BRAKE	*	2 102166-					
2	V600-110-600-40	BEARING,RB/6004	*	2 102166-					
3	V704-140-020-00	RING,SNAP/20C	*	2 102166-					
4	V705-140-042-00	RING,SNAP/42 C	*	2 102166-					
5	V744-120-420-80	SEAL,OIL/TC20428	*	2 102166-					
6	2221-325-001-00	ARM/BRAKE/P	*	2 102166-					
7	3740-314-017-00	WASHER,TENSION	*	2 102166-					
8	V211-260-802-00	BOLT/S	*	2 102166-					

FIG. 54 CASE(REAR)SYSTEM

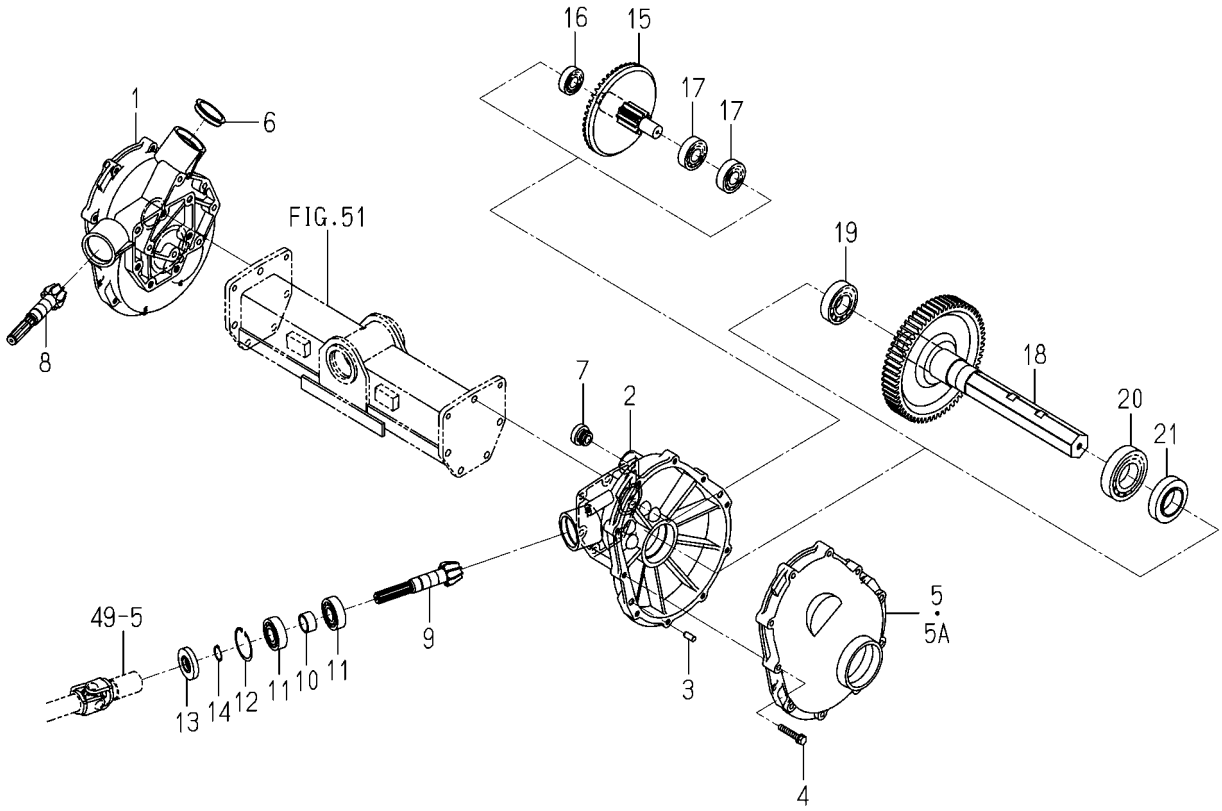

2213-330N-0100

KEY	PART CODE	DESCRIPTION	SPC	TYPE OF MODEL PZ80E16		ITC	COL	GRP	REMARKS
1	2213-330-002-00	CASE/IN/8/RH	*	1					
2	2213-330-051-00	CASE/REAR/IN/ROTARY/	*	1					
3	V522-100-801-80	PIN	*	4					
4	V211-560-804-50	BOLT,SEMS/M8X45 7T	*	20					
5	2213-330-004-00	CASE/OUTO/8D	*	2 -102260					
5A	2213-330-006-00	CASE/REAR/OUT/8D	*	2 102261-					
6	2161-330-006-00	COVER/47	*	1					
7	2157-201-004-10	PLUG,OIL	*	1					
8	2213-330-052-00	GEAR/BEVEL/9/L/PZ8/R	*	1					
9	2213-330-005-00	GEAR/BEVEL/9/PZ8/R	*	1					
10	2204-330-004-00	COLLAR/22X28X14	*	2					
11	V600-110-620-40	BEARING,RB/6204	*	4					
12	V705-140-047-00	RING,SNAP/47 C	*	2					
13	2161-330-004-00	SEAL,OIL/SDD7/204	*	2					
14	V704-140-020-00	RING,SNAP/20C	*	2					
15	2213-330-220-00	SHAFT/REAR/COUNTER/8	*	2					
16	V600-110-620-30	BEARING,RB/6203	*	2					
17	V600-110-630-40	BEARING,RB/6304	*	4					
18	2213-330-230-10	SHAFT/REAR/WHEEL/8	*	2					
19	V600-110-620-60	BEARING,RB/6206	*	2					
20	V600-110-620-80	BEARING,RB/6208	*	2					
21	2162-330-007-00	SEAL,WHEEL SHAFT	*	2					

FIG. 55 WHEEL(STEERING)SYSTEM

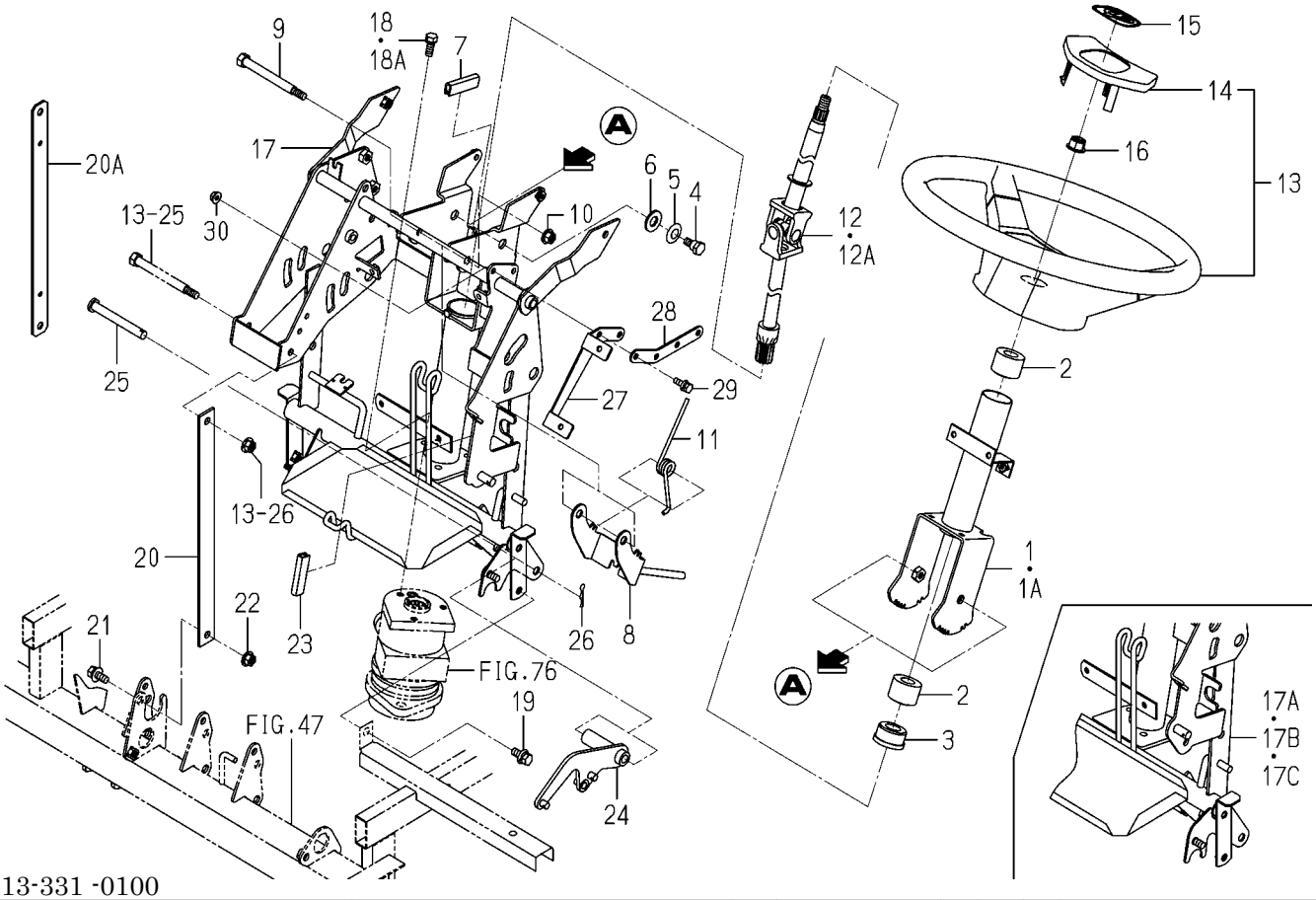

2213-331 -0100

KEY	PART CODE	DESCRIPTION	SPC	TYPE OF MODEL PZ80E16		ITC	COL	GRP	REMARKS
1	2204-331-300-10	COLUMN/UPPER	*	1 -102264					
1A	2204-331-300-30	COLUMN/UPPER	*	1 102265-		1			
2	1426-406-203-00	BUSH,COLUMN	*	2					
3	2144-301-005-10	BUSH/19X35X20	*	1					
4	2186-436-007-00	BOLT	*	2					
5	2161-618-003-00	SPRING/12X25X01	*	2					
6	V411-260-012-00	WASHER /M12	*	2					
7	3650-201-006-00	PROTECTOR,ENGINE	*	1 101650-					
8	2204-331-200-10	LEVER	*	1					
9	2204-331-002-00	PIN/10X108	*	1					
10	V362-260-008-00	NUT/WASHER	*	1					
11	2204-331-004-30	SPRING/HT016	*	1					
12	2204-331-210-00	SHAFT/STERRING	*	1 -101649					
12A	2204-331-210-10	SHAFT/STEERING COMP	*	1 101650-		1			
13	2161-331-400-10	STEERING/2/380 ASSY	*	1					
14	2161-331-401-10	CAP/STEERING	*	1					
15	2161-331-001-10	ORNAMENTO/I/STEERING	*	1					
16	2188-301-006-00	NUT/U/M12	*	1					
17	2213-331-310-30	COLUMN/LOWER/8 COMP	*	1 -101744					
17A	2213-331-310-90	COLUMN/LOWER/8 COMP	*	1 -102134		1			
17B	2213-331-320-00	COLUMN/LOWER/8 COMP	*	1 -102349					
17C	2213-331-320-10	COLUMN/LOWER/8 COMP	*	1 102350-		1			
18	V211-260-802-00	BOLT/S	*	3 -101649					
18A	V211-260-801-60	BOLT,SEMS (S) M8X16	*	3 101650-					
19	V211-360-802-00	BOLT/SP	*	2					
20	2213-331-001-00	PLATE/SUPPORT	*	1 -101649					
20A	2213-331-001-10	PLATE/SUPPORT/COLUMN	*	1 101650-		1			
21	V211-360-802-00	BOLT/SP	*	1					
22	V362-260-008-00	NUT/WASHER	*	1					
23	3650-201-006-00	PROTECTOR,ENGINE	*	1 100001-					

FIG. 55 WHEEL(STEERING)SYSTEM

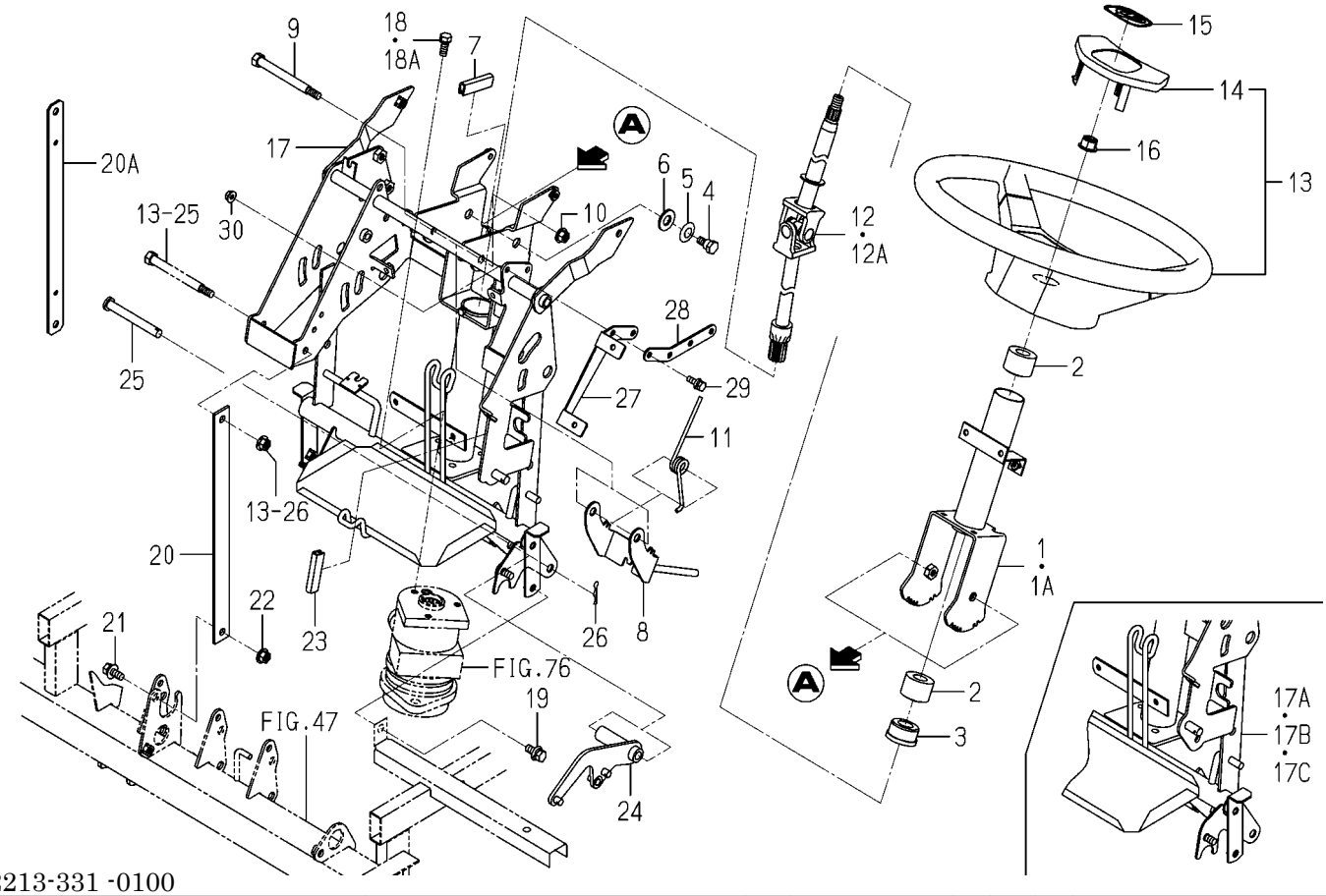

2213-331 -0100

KEY	PART CODE	DESCRIPTION	SPC	TYPE OF MODEL PZ80E16		ITC	COL	GRP	REMARKS
24	2213-331-400-10	ARM/HST/NEUTRAL COMP	*	1					
25	2178-421-003-00	PIN	*	1					
26	3505-704-003-00	PIN,HAIR (10)	*	1					
27	2213-331-002-10	PLATE/FUSE	*	1					
28	2213-331-003-00	PLATE/RELAY	*	1					
29	V210-360-602-00	BOLT/SP	*	2					
30	V360-260-006-00	NUT/M6	*	2					

FIG. 56 PEDAL(BRAKE)SYSTEM(1/3)

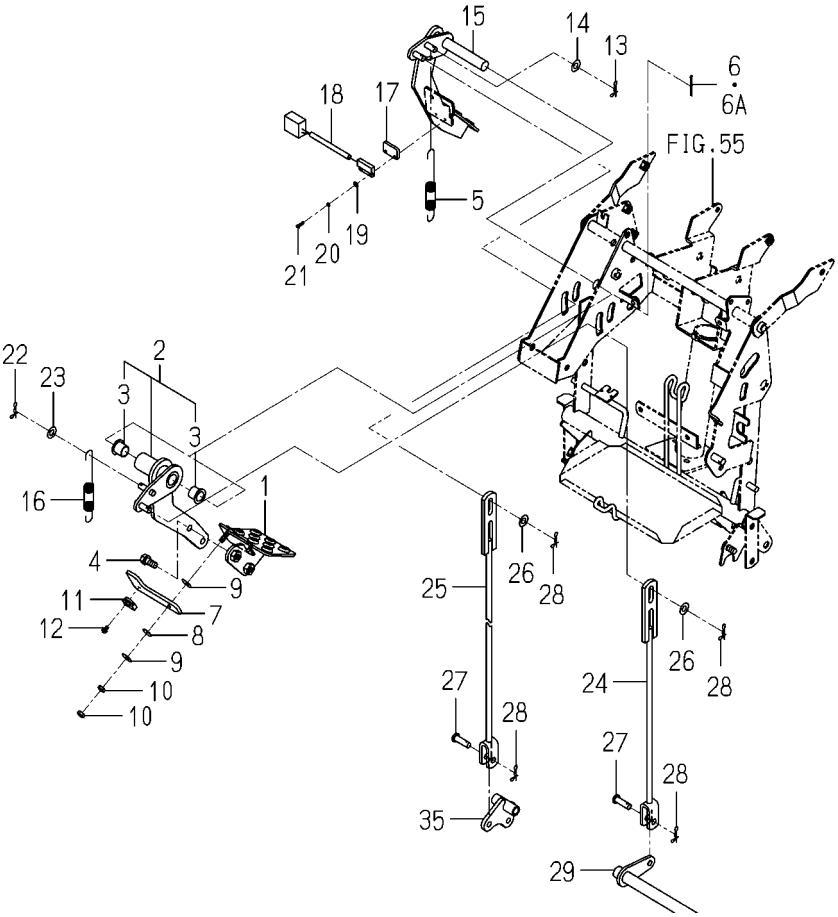

2213-336 -0100

KEY	PART CODE	DESCRIPTION	SPC	TYPE OF MODEL PZ80E16		ITC	COL	GRP	REMARKS
1	2213-336-200-00	PEDAL/BRAKE/LH COMP	*	1					
2	2213-336-340-00	ARM/BRAKE/LH ASSY	*	1					
3	3656-221-001-10	BUSH/15X17X16	*	2					
4	V211-260-802-00	BOLT/S	*	2					
5	2213-336-005-00	SPRING/HE124	*	1					
6	V500-162-503-00	PIN,CUTTER/2.5X30	*	1 -101649					
6A	V500-162-502-50	PIN,SPLIT/2.5X25	*	1 101650-					
7	2213-336-001-00	PLATE	*	1					
8	3560-203-004-00	SPRING,CONE	*	1					
9	3560-503-302-00	WASHER,WIRE TENSION	*	2					
10	V302-260-006-00	NUT/M 6	*	2					
11	2188-542-202-00	MAGNET/BRAKE	*	1					
12	V120-364-001-00	SCREW/SP	*	1					
13	2161-735-006-00	PIN	*	1 100001-					
14	V411-260-008-00	WASHER,PL/M 8	*	1 100001-					
15	2213-336-210-00	PEDAL/BRAKE/RH COMP	*	1					
16	2213-336-005-00	SPRING/HE124	*	1					
17	2188-542-003-00	SPACER,BRAKE SENSOR	*	1					
18	2186-537-110-00	SENSOR ASSY	*	1					
19	V411-260-003-00	WASHER/M3	*	2					
20	V401-160-003-00	WASHER,SP/M 3	*	2					
21	V111-163-001-20	SCREW/M3X12	*	2					
22	2161-735-006-00	PIN	*	1 100001-					
23	V411-260-008-00	WASHER,PL/M 8	*	1 100001-					
24	2213-336-310-20	ROD/BRAKE/LH COMP	*	1					
25	2213-336-270-20	ROD/BRAKE/RH COMP	*	1					
26	V411-260-008-00	WASHER,PL/M 8	*	2					
27	2186-336-003-00	PIN/08X27	*	2					
28	2161-735-006-00	PIN	*	4					
29	2213-336-290-00	SHAFT/BRAKE COMP	*	1					

FIG. 56 PEDAL(BRAKE)SYSTEM(2/3)

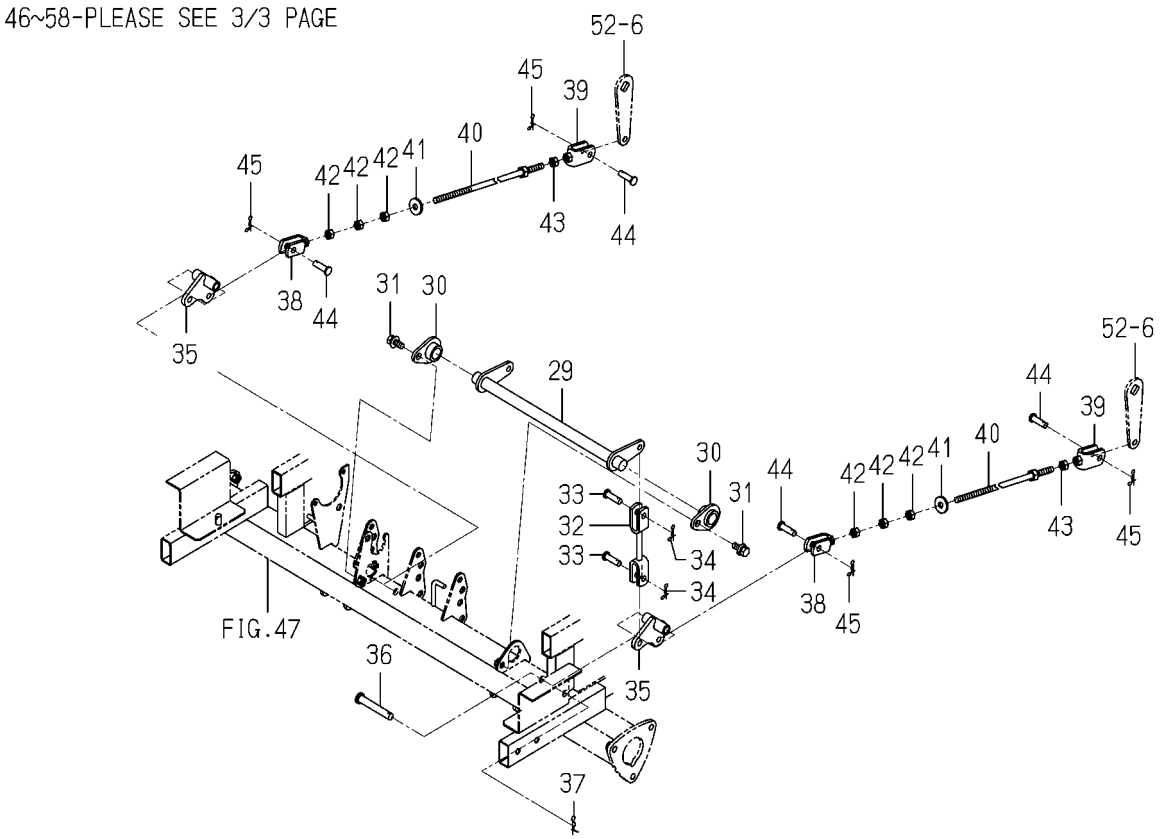

2213-336 -0100

KEY	PART CODE	DESCRIPTION	SPC	TYPE OF MODEL PZ80E16		ITC	COL	GRP	REMARKS
30	2162-415-250-10	PLATE	*	2					
31	V211-360-802-00	BOLT/SP	*	2					
32	2213-336-320-00	ROD/BRAKE/CONNECT	*	1					
33	2186-336-003-00	PIN/08X27	*	2					
34	2161-735-006-00	PIN	*	2					
35	2213-336-280-00	ARM/BRAKE/COUNTER	*	2					
36	2144-519-003-00	PIN/10X64	*	2					
37	2161-222-003-00	PIN,SNAP	*	2					
38	2213-336-250-00	PLATE/U/19X30 COMP	*	2					
39	2144-337-230-00	PLATE	*	2					
40	2213-336-260-10	ROD/BRAKE/TURN COMP	*	2					
41	2130-407-003-00	WASHER	*	2					
42	V304-260-008-00	NUT	*	6					
43	1560-132-007-30	NUT/M8	*	2					
44	2186-336-003-00	PIN/08X27	*	4					
45	2161-735-006-00	PIN	*	4					
46	2213-336-220-10	PEDAL/CLUTCH COMP	*	1					
47	2213-336-005-00	SPRING/HE124	*	1					
48	V500-162-503-00	PIN,CUTTER/2.5X30	*	1 -101649					
48A	V500-162-502-50	PIN,SPLIT/2.5X25	*	1 101650-					
49	2209-531-220-00	PLATE/COUNTER/LIFT	*	1					
50	2194-518-310-00	PLATE/L/17X34	*	1					
51	2213-336-240-00	ROD/PARKING BRAKE	*	1					
52	V301-260-006-00	NUT/M6	*	1					
53	2201-422-003-00	NUT/M6X1.0/LH	*	1					
54	V411-260-008-00	WASHER,PL/M 8	*	2					
55	2161-735-006-00	PIN	*	2					
56	2213-336-007-00	CABLE/BRAKE	*	1 100001-					
57	2161-735-005-00	PIN	*	1 100001-					
58	2213-336-003-10	LOCK/BRAKE	*	1					

FIG. 56 PEDAL(BRAKE)SYSTEM(3/3)

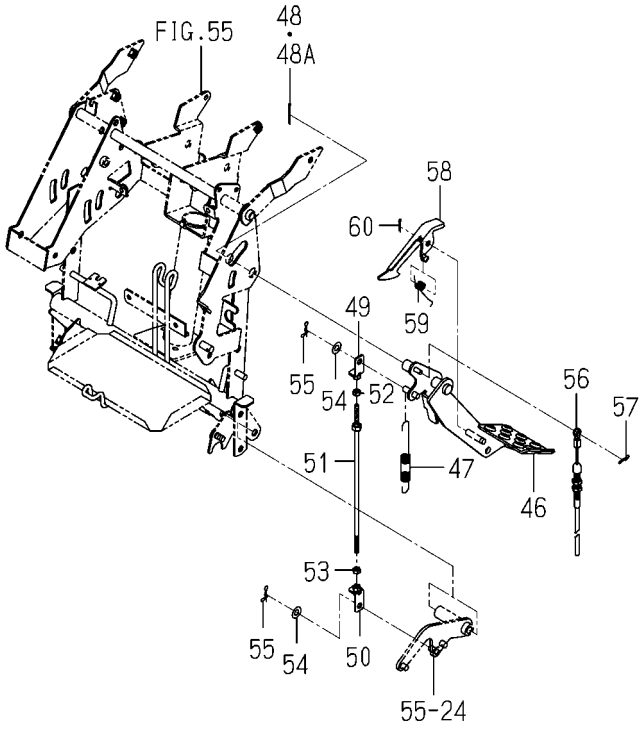

2213-336 -0100

KEY	PART CODE	DESCRIPTION	SPC	TYPE OF MODEL PZ80E16		ITC	COL	GRP	REMARKS
59	2213-336-004-00	SPRING/HT012	*	1					
60	V500-163-001-50	PIN,SPLIT/3 X15	*	1					

FIG. 57 WEIGHT SYSTEM

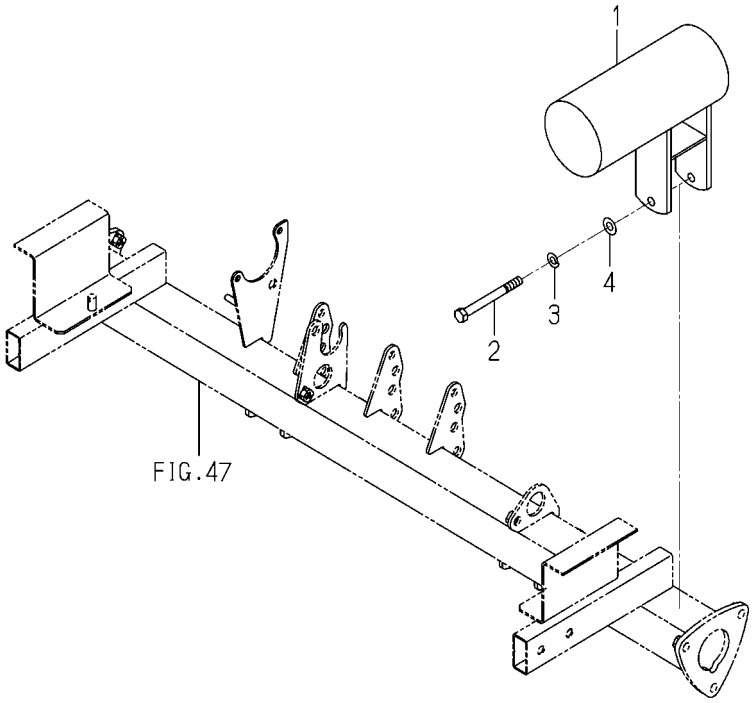

2204-340L-0100

KEY	PART CODE	DESCRIPTION	SPC	TYPE OF MODEL PZ80E16		ITC	COL	GRP	REMARKS
1	2204-340-200-10	WEIGHT/PZ	*	2					
2	V201-260-808-00	BOLT/M 8X80	*	2					
3	V401-160-008-00	WASHER,SP/M 8	*	2					
4	V411-260-008-00	WASHER,PL/M 8	*	2					

FIG. 58 BUMPER SYSTEM

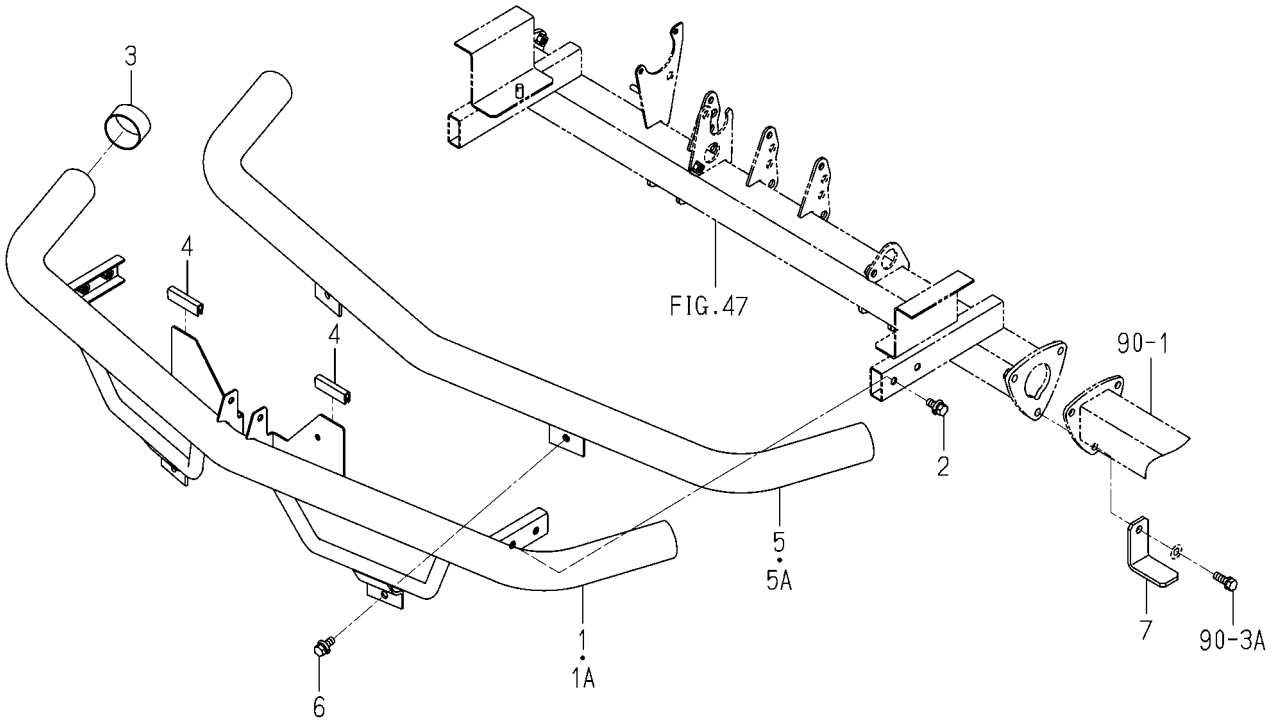

2213-343D-0100

KEY	PART CODE	DESCRIPTION	SPC	TYPE OF MODEL PZ80E16		ITC	COL	GRP	REMARKS
1	2213-320-390-20	BUMPER/WEIGHT/PZ/D	*	1 -101649			8E		
1A	2213-320-390-30	BUMPER/WEIGHT/PZ/8	*	1 101650-		1	8E		
2	V211-360-802-00	BOLT/SP	*	4 100001-					
3	2204-343-001-00	CAP/BUMPER	*	2 100001-					
4	3650-201-006-00	PROTECTOR,ENGINE	*	2 100001-					
5	2213-320-380-10	BUMPER/WEIGHT/1 COMP	*	1 -101649			8E		
5A	2213-320-380-20	BUMPER/WEIGHT/1 COMP	*	1 101650-		1	8E		
6	V211-360-802-00	BOLT/SP	*	2					
7	2213-320-002-00	PLATE/L/55X55	*	2 100001-					

FIG. 59 PUMP SYSTEM

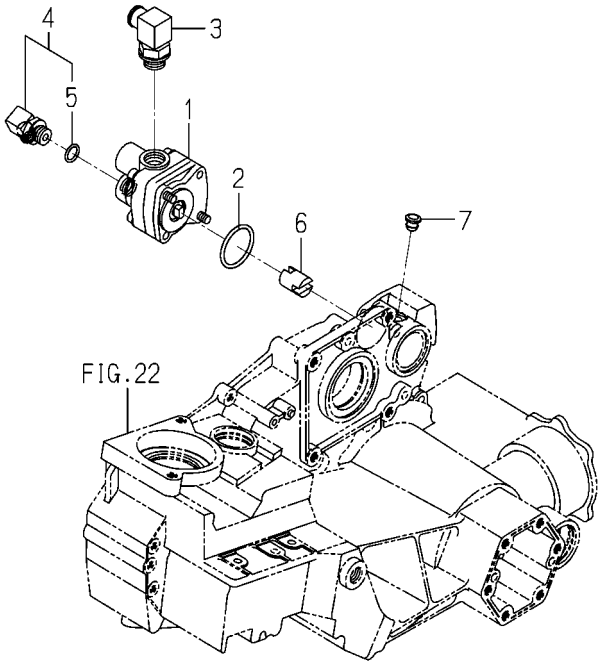

2213-401 -0100

KEY	PART CODE	DESCRIPTION	SPC	TYPE OF MODEL PZ80E16		ITC	COL	GRP	REMARKS
1	2204-401-200-00	PUMP/PZ	*	1					
2	V720-103-503-90	O-RING/P39	*	1					
3	2186-401-001-00	ADPTER/90ß G1/2	*	1					
4	3805-354-280-00	ADAPTOR/G3/8XM16ASSY	*	1					
5	V720-112-401-40	O-RING/P14	*	1					
6	2204-401-001-10	COUPLING/PUMP	*	1					
7	2186-738-038-20	CAP/10	*	1					

FIG. 60 CYLINDER SYSTEM

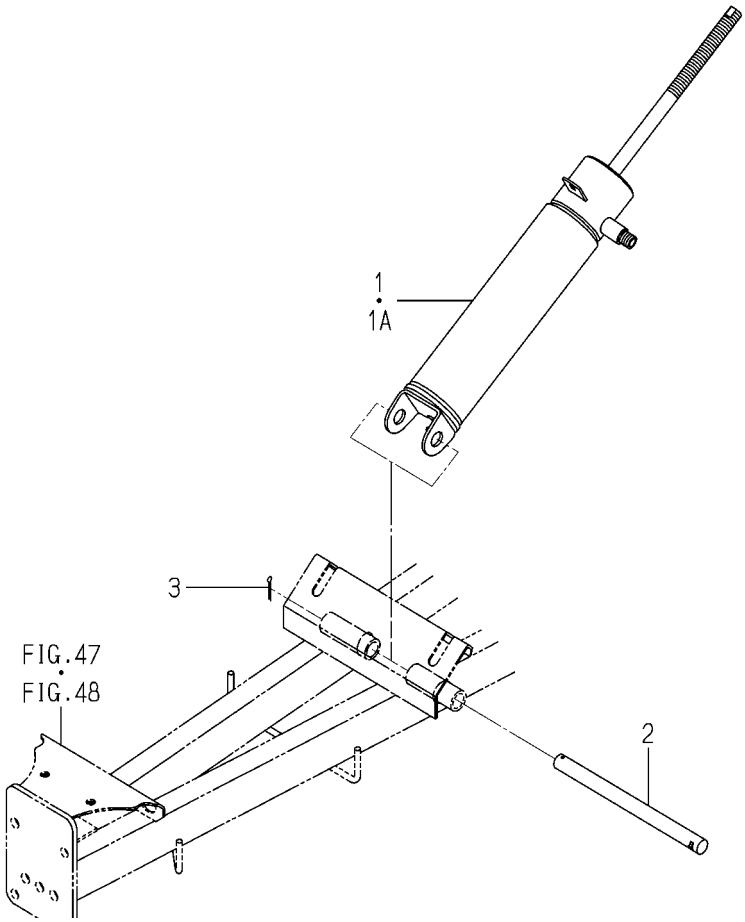

2213-407 -0100

KEY	PART CODE	DESCRIPTION	SPC	TYPE OF MODEL PZ80E16		ITC	COL	GRP	REMARKS
1	2213-407-200-40	CYLINDER/8 COMP	*	1 -102349					
1A	2213-407-200-50	CYLINDER/8 COMP	*	1 102350-		1			
2	2213-407-005-00	PIN/15X187	*	1					
3	V500-163-002-50	PIN,SPLIT/3 X25	*	1					

FIG. 61 PIPING SYSTEM(D TYPE)(1/2)

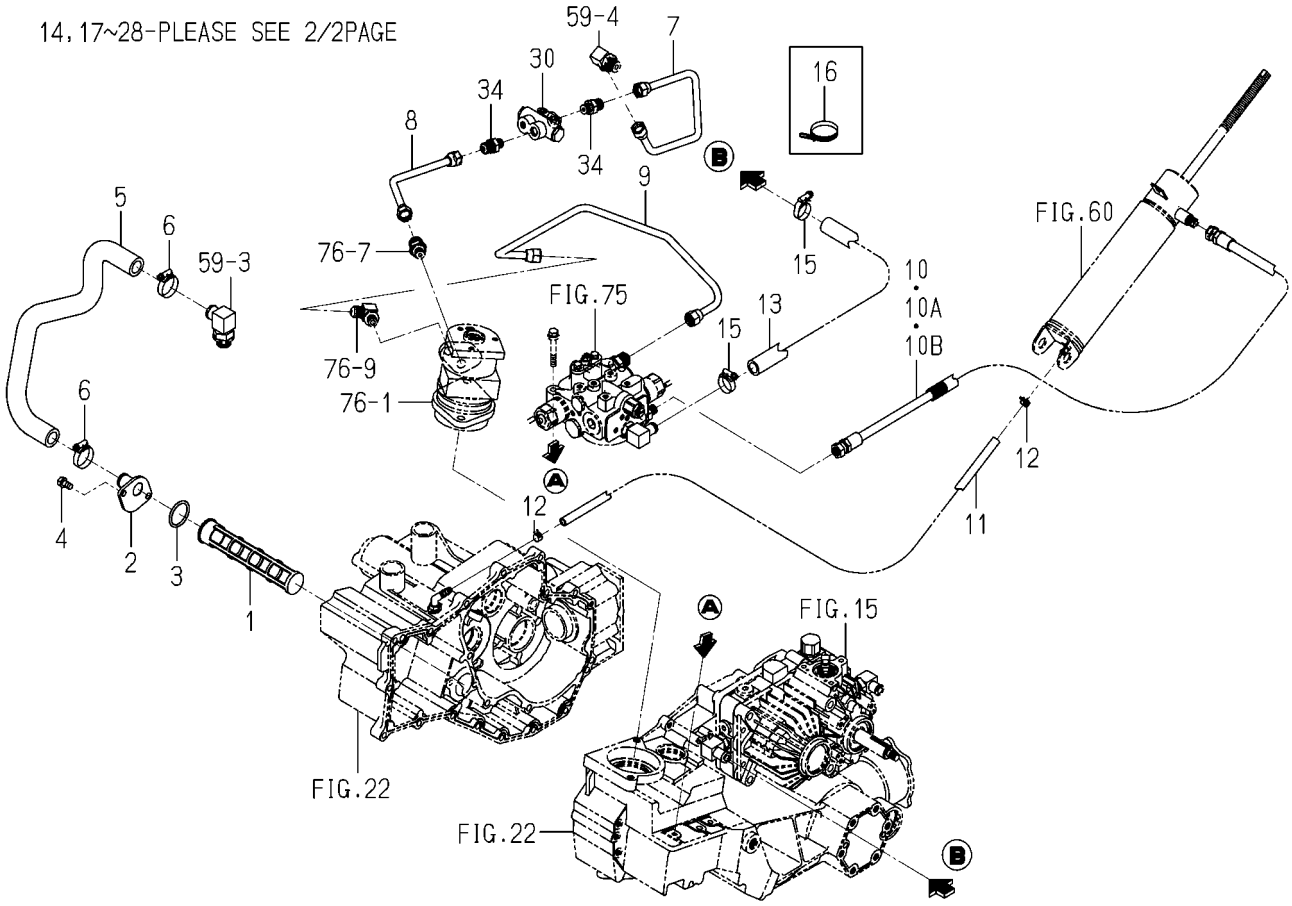

2213-409 -0100

KEY	PART CODE	DESCRIPTION	SPC	TYPE OF MODEL PZ80E16		ITC	COL	GRP	REMARKS
1	2157-402-001-00	FILTER,OIL	*	1					
2	2204-409-210-00	ADPTER	*	1					
3	V720-103-503-80	O-RING/P38	*	1					
4	V211-260-801-60	BOLT,SEMS (S) M8X16	*	2 100001-					
5	2204-409-008-10	HOSE/SUCTION/PZ	*	1					
6	J061-120-032-00	CLAMP/WORM/20-32	*	2					
7	2213-409-007-10	PIPING/PUMP/VALVE/8	*	1					
8	2213-409-008-10	PIPING/VALVE/POWERST	*	1					
9	2204-409-003-00	PIPE	*	1					
10	2204-409-004-20	HOSE/1430/H	*	1 -101649					
10A	2204-409-004-30	HOSE/1430/H	*	1 -102376		1			
10B	2204-409-043-00	HOSE/1430/H	*	1 102377-					
11	2213-409-012-00	HOSE/8X11X1100	*	1					
12	J062-104-111-00	CLIP/HOSE/10.4-11.1	*	2					
13	2204-409-007-10	HOSE/300	*	1					
14	2213-409-001-10	HOSE/14X22X1250	*	1					
15	J061-116-025-00	CLAMP/WORM/16-25	*	4					
16	1376-402-003-00	BAND,WIRE/140	*	1 100001-					
17	2190-409-230-00	COOLER,OIL	*	1					
18	V211-260-801-60	BOLT,SEMS (S) M8X16	*	2					
19	2213-409-006-10	HOSE/14X22X870	*	1					
20	2213-409-005-10	HOSE/14X22X60	*	1					
21	J061-116-025-00	CLAMP/WORM/16-25	*	4					
22	1342-402-006-00	BAND/WIRE/250	*	3					
23	2213-409-009-00	PIPING/VALVE/ROLLING	*	1					
24	2186-409-033-00	HOSE	*	1					
25	1716-506-001-00	ADAPTER/L/R1/8	*	1					
26	1376-402-003-00	BAND,WIRE/140	*	2					
27	3768-185-022-10	ADAPTER(90ß/PUMP)	*	1					
28	2161-409-220-00	HOSE/1700	*	1 -102260					

FIG. 61 PIPING SYSTEM(D TYPE)(2/2)

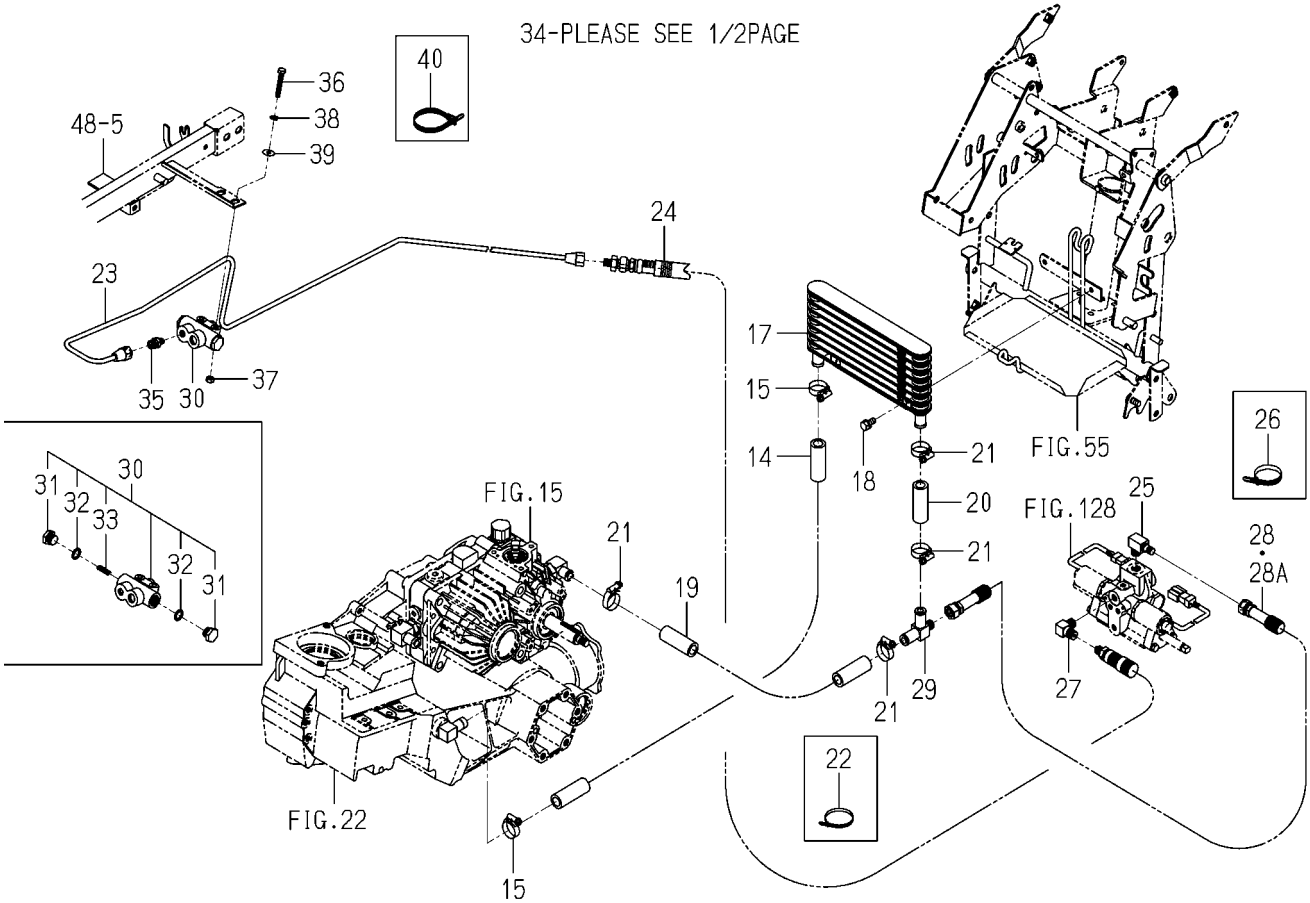

2213-409 -0100

KEY	PART CODE	DESCRIPTION	SPC	TYPE OF MODEL PZ80E16		ITC	COL	GRP	REMARKS
28A	3676-374-320-00	HOSE,HYDUALIC/1700	*	1 102261-					
29	2213-409-004-00	ADAPTER/T/RETURN/Z	*	1					
30	K233-007-000-10	VALVE,CONTROL	*	1					
31	K116-005-104-00	PLUG	*	2					
32	V720-102-401-20	O-RING/P12	*	2					
33	K211-035-005-00	SPRING/HC026	*	1					
34	1716-510-004-00	ADAPTER/RC1/4	*	2					
35	2186-409-036-00	ADAPTER	*	1					
36	V200-260-604-00	BOLT/M 6X40	*	2					
37	V301-260-006-00	NUT/M6	*	2					
38	V401-160-006-00	WASHER,SP/M 6	*	2					
39	3560-503-302-00	WASHER,WIRE TENSION	*	2					
40	1421-621-038-00	BAND,WIRE/170	*	13					

FIG. 62 PIPING SYSTEM(G TYPE)(1/2) (NO.100001-101046)

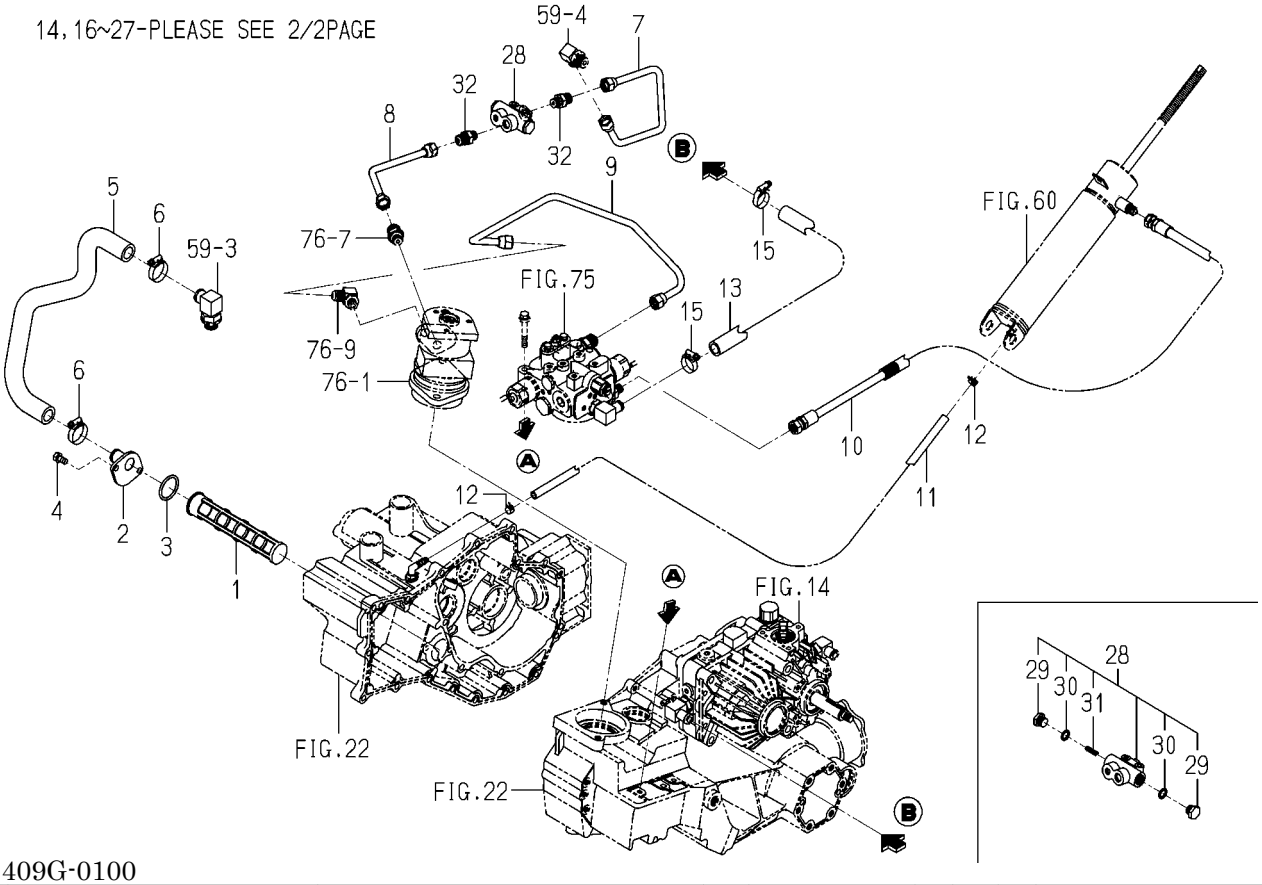

2213-409G-0100

KEY	PART CODE	DESCRIPTION	SPC	TYPE OF MODEL PZ80E16		ITC	COL	GRP	REMARKS
1	2157-402-001-00	FILTER,OIL	*	1 -101046					
2	2204-409-210-00	ADPTER	*	1 -101046					
3	V720-103-503-80	O-RING/P38	*	1 -101046					
4	V211-260-801-60	BOLT,SEMS (S) M8X16	*	2 -101046					
5	2204-409-008-10	HOSE/SUCTION/PZ	*	1 -101046					
6	J061-120-032-00	CLAMP/WORM/20-32	*	2 -101046					
7	2213-409-007-10	PIPING/PUMP/VALVE/8	*	1 -101046					
8	2213-409-008-10	PIPING/VALVE/POWERST	*	1 -101046					
9	2204-409-003-00	PIPE	*	1 -101046					
10	2204-409-004-20	HOSE/1430/H	*	1 -101046					
11	2213-409-012-00	HOSE/8X11X1100	*	1 -101046					
12	J062-104-111-00	CLIP/HOSE/10.4-11.1	*	2 -101046					
13	2204-409-007-10	HOSE/300	*	1 -101046					
14	2213-409-001-10	HOSE/14X22X1250	*	1 -101046					
15	J061-116-025-00	CLAMP/WORM/16-25	*	4 -101046					
16	2190-409-230-00	COOLER,OIL	*	1 -101046					
17	V211-260-801-60	BOLT,SEMS (S) M8X16	*	2 -101046					
18	2213-409-006-10	HOSE/14X22X870	*	1 -101046					
19	2213-409-005-10	HOSE/14X22X60	*	1 -101046					
20	J061-116-025-00	CLAMP/WORM/16-25	*	4 -101046					
21	1342-402-006-00	BAND/WIRE/250	*	3 -101046					
22	2213-409-009-00	PIPING/VALVE/ROLLING	*	1 -101046					
23	2186-409-033-00	HOSE	*	1 -101046					
24	1716-506-001-00	ADAPTER/L/R1/8	*	1 -101046					
25	3768-185-022-10	ADAPTER(90ß/PUMP)	*	1 -101046					
26	2161-409-220-00	HOSE/1700	*	1 -101046					
27	2213-409-004-00	ADAPTER/T/RETURN/Z	*	1 -101046					
28	K233-007-000-10	VALVE,CONTROL	*	1 -101046					
29	K116-005-104-00	PLUG	*	2 -101046					
30	V720-102-401-20	O-RING/P12	*	2 -101046					

FIG. 62 PIPING SYSTEM(G TYPE)(2/2) (NO.100001-101046)

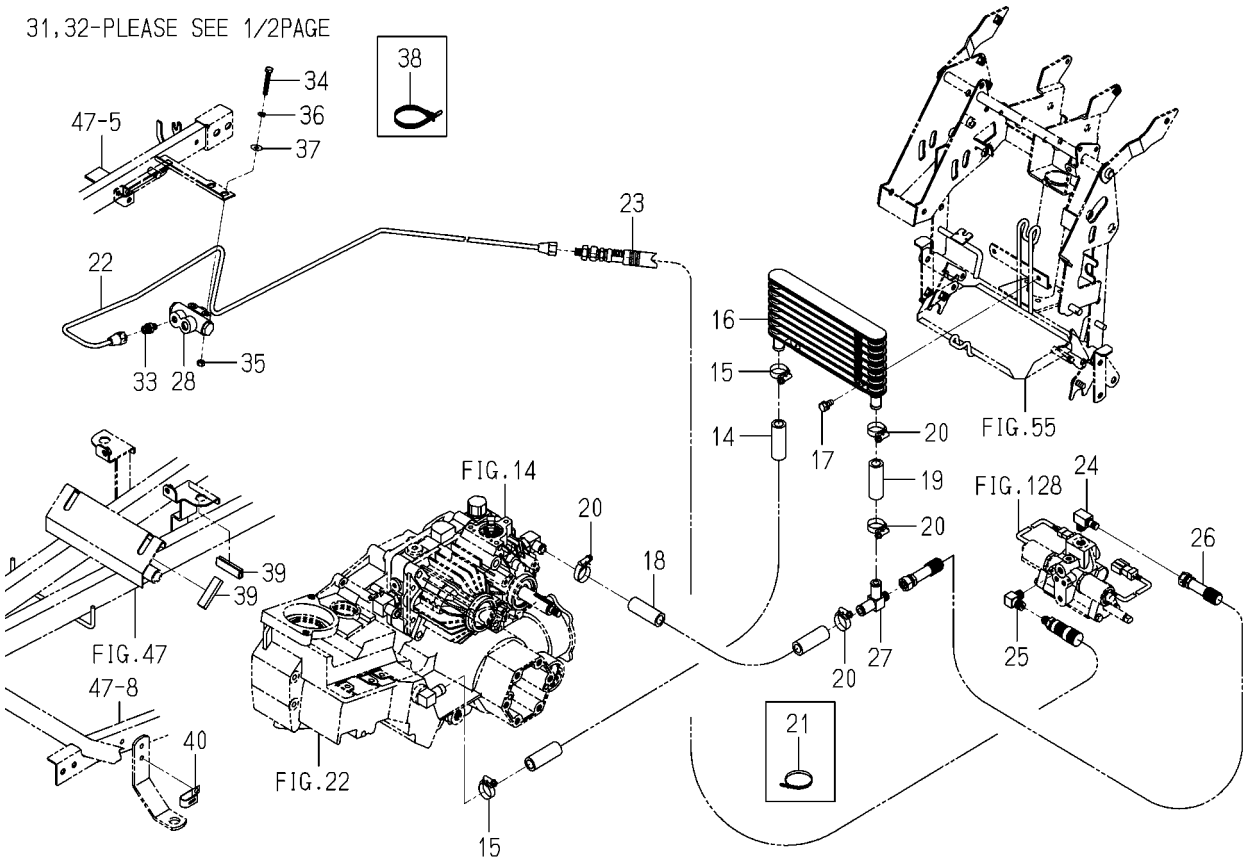

2213-409G-0100

KEY	PART CODE	DESCRIPTION	SPC	TYPE OF MODEL PZ80E16		ITC	COL	GRP	REMARKS
31	K211-035-005-00	SPRING/HC026	*	1 -101046					
32	1716-510-004-00	ADAPTER/RC1/4	*	2 -101046					
33	2186-409-036-00	ADAPTER	*	1 -101046					
34	V200-260-604-00	BOLT/M 6X40	*	2 -101046					
35	V301-260-006-00	NUT/M6	*	2 -101046					
36	V401-160-006-00	WASHER,SP/M 6	*	2 -101046					
37	3560-503-302-00	WASHER,WIRE TENSION	*	2 -101046					
38	1421-621-038-00	BAND,WIRE/170	*	12 -101046					
39	3650-201-006-00	PROTECTOR,ENGINE	*	2 -101046					
40	3612-631-001-00	CLAMP,WINKER B	*	1 -101046					

FIG. 63 PIPING SYSTEM(G TYPE)(NO.101047-)(1/2)

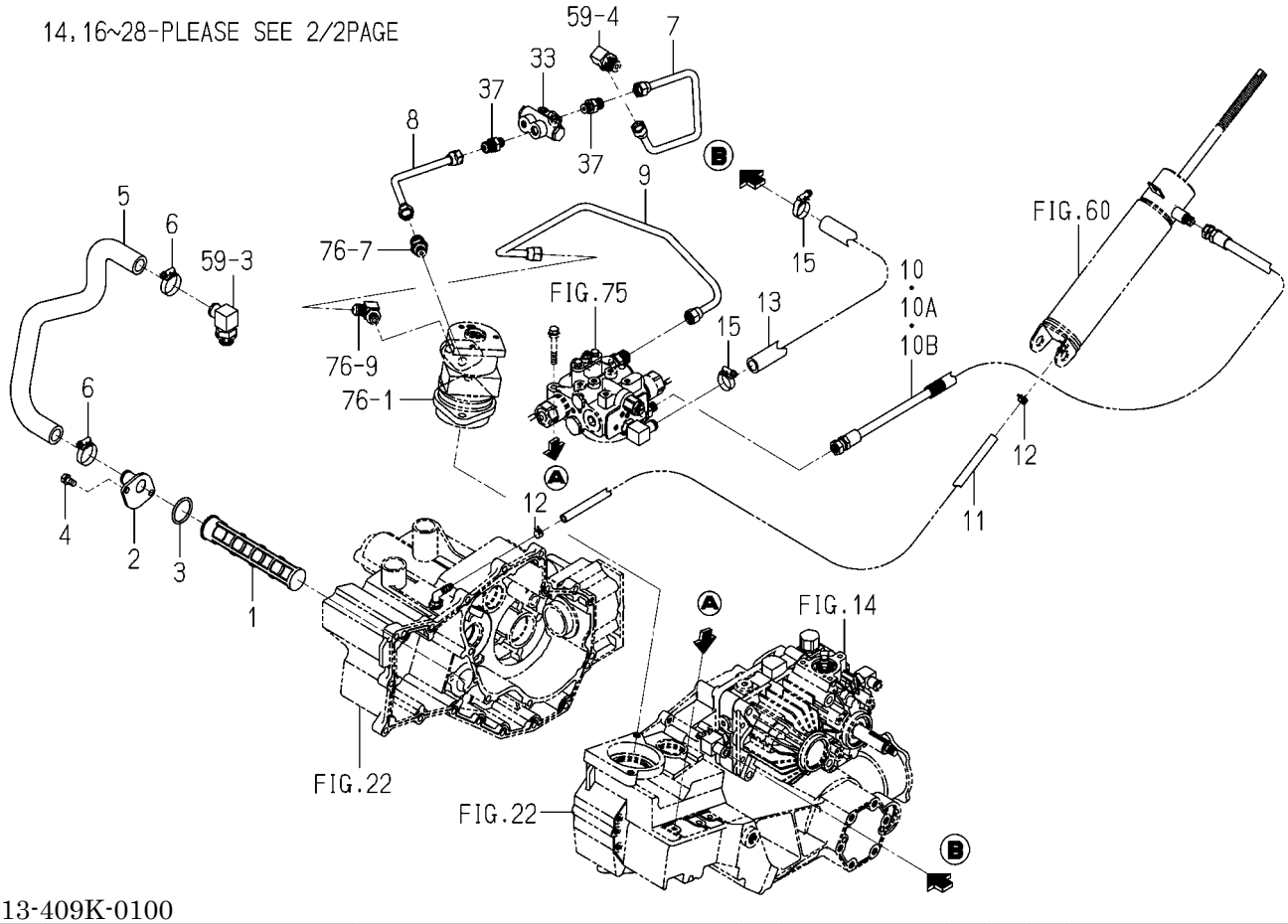

2213-409K-0100

KEY	PART CODE	DESCRIPTION	SPC	TYPE OF MODEL PZ80E16		ITC	COL	GRP	REMARKS
1	2157-402-001-00	FILTER,OIL	*	1 101047-					
2	2204-409-210-00	ADPTER	*	1 101047-					
3	V720-103-503-80	O-RING/P38	*	1 101047-					
4	V211-260-801-60	BOLT,SEMS (S) M8X16	*	2 101047-					
5	2204-409-008-10	HOSE/SUCTION/PZ	*	1 101047-					
6	J061-120-032-00	CLAMP/WORM/20-32	*	2 101047-					
7	2213-409-007-10	PIPING/PUMP/VALVE/8	*	1 101047-					
8	2213-409-008-10	PIPING/VALVE/POWERST	*	1 101047-					
9	2204-409-003-00	PIPE	*	1 101047-					
10	2204-409-004-20	HOSE/1430/H	*	1 -101649					
10A	2204-409-004-30	HOSE/1430/H	*	1 -102376		1			
10B	2204-409-043-00	HOSE/1430/H	*	1 102377-					
11	2213-409-012-00	HOSE/8X11X1100	*	1 101047-					
12	J062-104-111-00	CLIP/HOSE/10.4-11.1	*	2 101047-					
13	2204-409-007-10	HOSE/300	*	1 101047-					
14	2213-409-063-00	HOSE/14X22X1040	*	1 101047-					
15	J061-116-025-00	CLAMP/WORM/16-25	*	4 101047-					
16	2190-409-230-00	COOLER,OIL	*	1 101047-					
17	2213-409-300-00	STAY/COOLEROIL COMP	*	1 101047-					
18	2213-409-061-10	CAVER/LEADINGTHEWIND	*	1 101047-		1			
19	V211-360-802-00	BOLT/SP	*	3 101047-					
20	V210-260-602-00	BOLT/S	*	1 101047-					
21	2213-409-006-10	HOSE/14X22X870	*	1 101047-					
22	2213-409-062-00	HOSE/14X22X450	*	1 101047-					
23	J061-116-025-00	CLAMP/WORM/16-25	*	4 101047-					
24	1342-402-006-00	BAND/WIRE/250	*	3 101047-					
25	2204-556-061-00	COVER/OILCOOLER	*	1 101650-					
26	2186-508-009-00	CLIP,STEP MAT	*	2 101650-					
27	2213-409-009-00	PIPING/VALVE/ROLLING	*	1 101047-					
28	2186-409-033-00	HOSE	*	1 101047-					

FIG. 63 PIPING SYSTEM(G TYPE)(NO.101047-)(2/2)

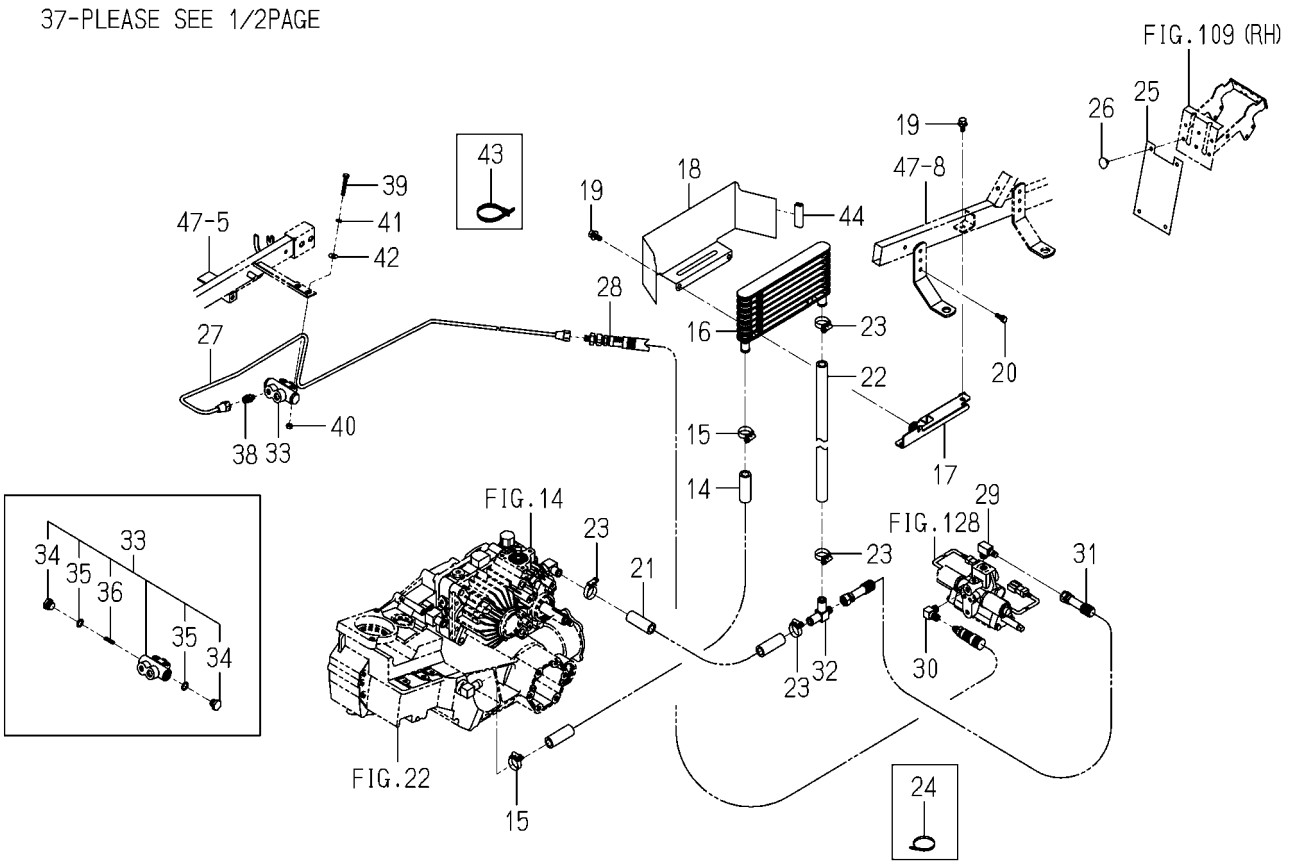

2213-409K-0100

KEY	PART CODE	DESCRIPTION	SPC	TYPE OF MODEL PZ80E16		ITC	COL	GRP	REMARKS
29	1716-506-001-00	ADAPTER/L/R1/8	*	1 101047-					
30	3768-185-022-10	ADAPTER(90ß/PUMP)	*	1 101047-					
31	3676-374-320-00	HOSE,HYDUALIC/1700	*	1 101047-					
32	2213-409-004-00	ADAPTER/T/RETURN/Z	*	1 101047-					
33	K233-007-000-10	VALVE,CONTROL	*	1 101047-					
34	K116-005-104-00	PLUG	*	2 101047-					
35	V720-102-401-20	O-RING/P12	*	2 101047-					
36	K211-035-005-00	SPRING/HC026	*	1 101047-					
37	1716-510-004-00	ADAPTER/RC1/4	*	2 101047-					
38	2186-409-036-00	ADAPTER	*	1 101047-					
39	V200-260-604-00	BOLT/M 6X40	*	2 101047-					
40	V301-260-006-00	NUT/M6	*	2 101047-					
41	V401-160-006-00	WASHER,SP/M 6	*	2 101047-					
42	3560-503-302-00	WASHER,WIRE TENSION	*	2 101047-					
43	1421-621-038-00	BAND,WIRE/170	*	12 101047-					
44	3650-201-006-00	PROTECTOR,ENGINE	*	2 101047-					

FIG. 64 CASE(SPRING)SYSTEM

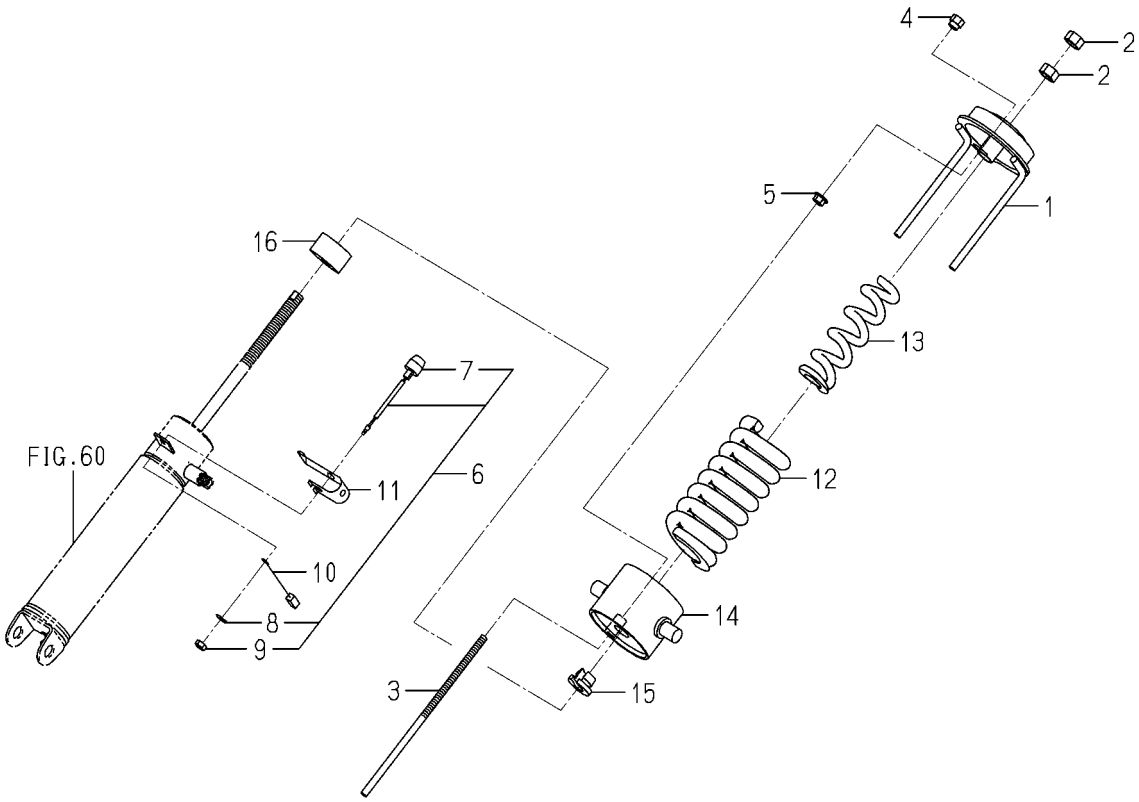

2213-411 -0100

KEY	PART CODE	DESCRIPTION	SPC	TYPE OF MODEL PZ80E16		ITC	COL	GRP	REMARKS
1	2213-411-220-00	CASE/SPRING/UPPER	*	1					
2	V304-260-014-00	NUT/M14	*	2					
3	2204-411-005-10	ROD/AUTO-RETURN	*	1					
4	2204-411-011-00	NUT	*	1					
5	V362-260-008-00	NUT/WASHER	*	1					
6	2145-542-230-00	SWITCH,PUSH	*	1					
7	2145-542-232-10	BOOT	*	1					
8	V401-160-008-00	WASHER,SP/M 8	*	1					
9	V335-260-008-00	NUT	*	1					
10	8836-502-203-00	HARNESS/SWGND	*	1					
11	2204-411-009-10	PLATE/AUTO-TURN	*	1					
12	2213-411-001-00	SPRING/HC170	*	1					
13	2213-411-006-00	SPRING/HC145/SUB	*	1					
14	2213-411-200-00	CASE/SPRING/LOWER	*	1					
15	2204-411-001-00	BUSH	*	1					
16	2212-408-002-10	CUSHION/SEAT/PQZ	*	1					

FIG. 65 LINK(LOWER)SYSTEM

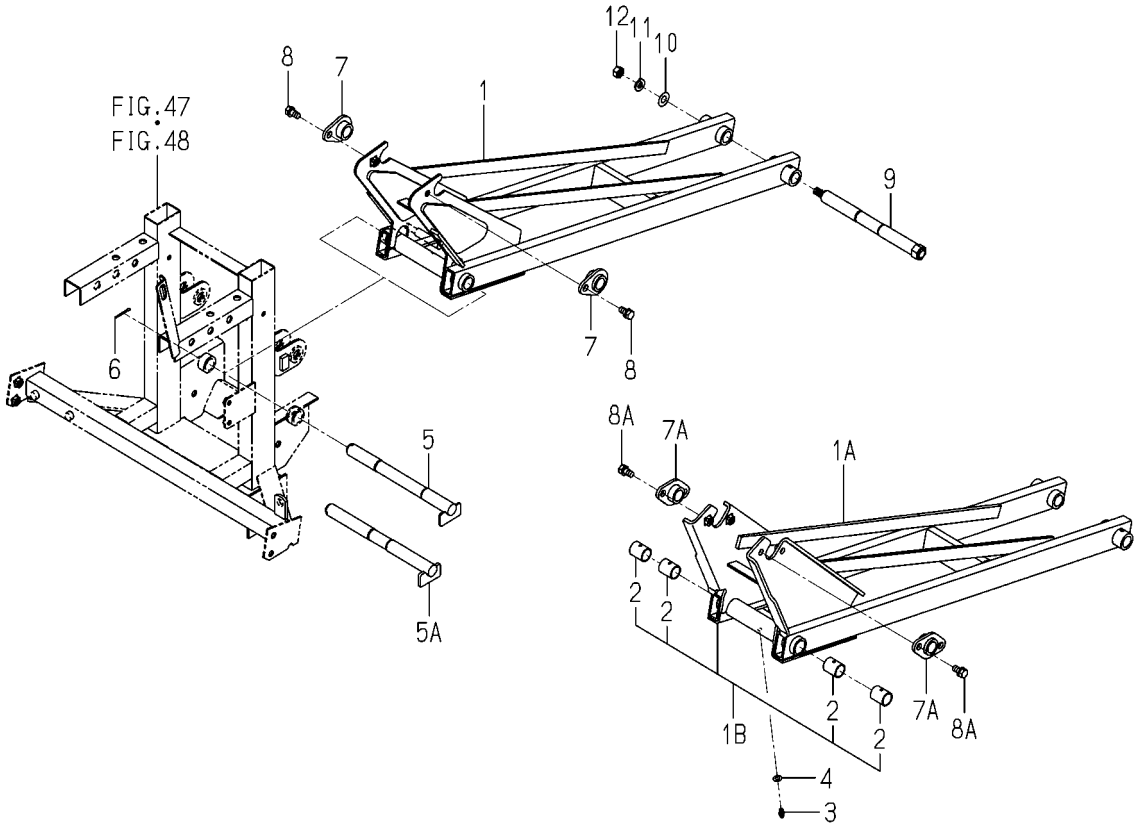

2213-414N-0100

KEY	PART CODE	DESCRIPTION	SPC	TYPE OF MODEL PZ80E16		ITC	COL	GRP	REMARKS
1	2213-414-300-20	LINK/LOWER/8ROTARY	*	1 -102192					
1A	2213-414-300-50	LINK/LOWER/PZ8COMP	*	1 -102349		1			
1B	2213-414-350-00	LINK/LOWER/PZ8 ASSY	*	1 102350-					
2	P112-711-201-00	BUSH/18X21X25	*	4 100001-					
3	V760-150-000-00	NIPPLE,GREASE	*	1 102350-					
4	V411-260-006-00	WASHER / M6	*	1 102350-					
5	2213-414-210-00	PIN/18X217/LOWE COMP	*	1 -101664					
5A	2213-414-210-10	PIN/18X217/LOWE COMP	*	1 101665-		1			
6	V500-163-002-50	PIN,SPLIT/3 X25	*	1					
7	2162-415-250-10	PLATE	*	2 -102192					
7A	2213-414-240-00	PLATE/LINK/8 COMP	*	2 102193-					
8	V211-260-801-60	BOLT,SEMS (S) M8X16	*	2 -102192					
8A	V211-260-801-60	BOLT,SEMS (S) M8X16	*	4 102193-					
9	2204-414-230-00	PIN/18X195	*	1					
10	V411-260-010-00	WASHER/M10	*	1					
11	V401-160-010-00	WASHER,SP/M10	*	1					
12	V304-260-010-00	NUT	*	1					

FIG. 66 LINK(UPPER)SYSTEM

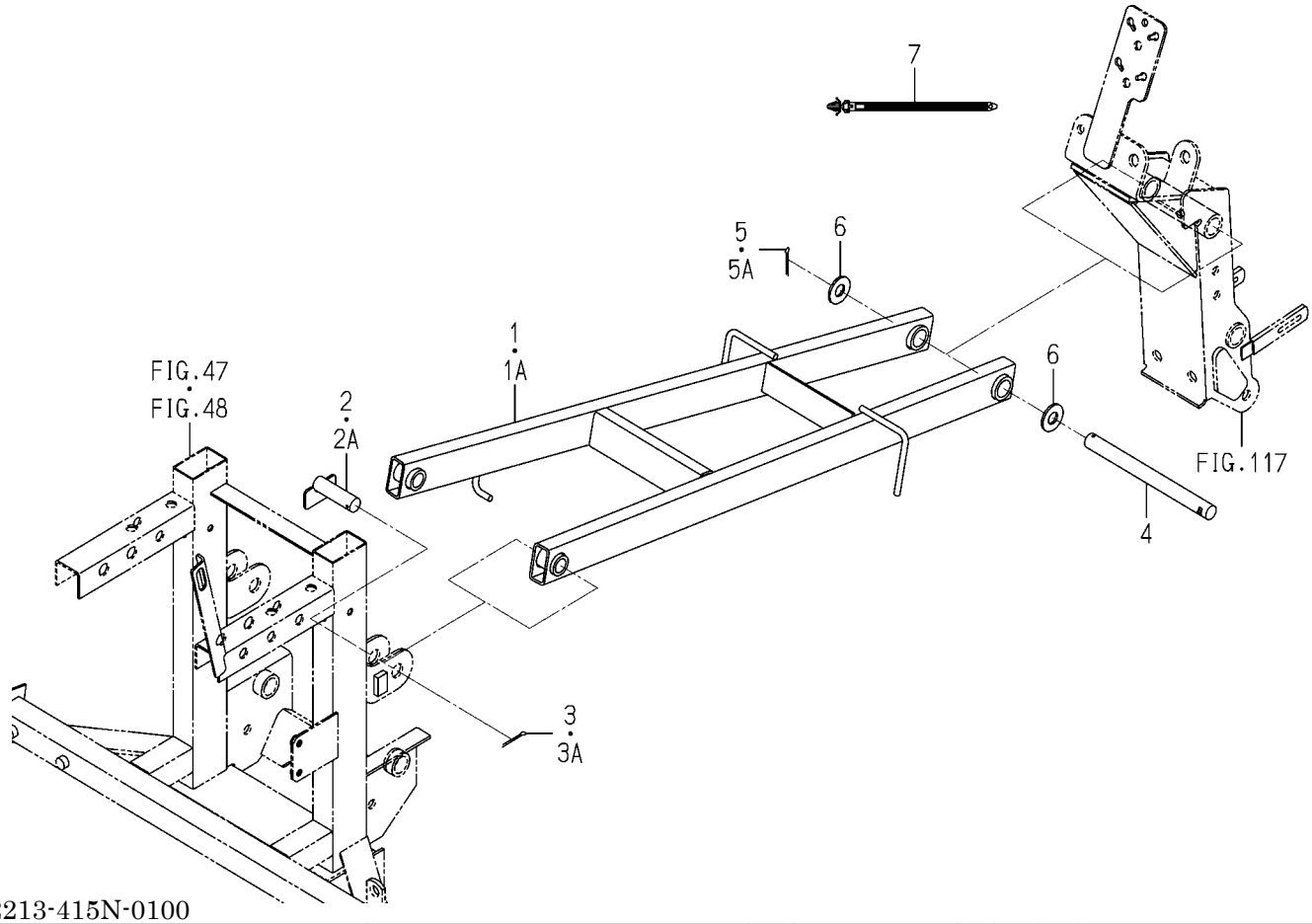

2213-415N-0100

KEY	PART CODE	DESCRIPTION	SPC	TYPE OF MODEL PZ80E16		ITC	COL	GRP	REMARKS
1	2213-415-350-40	LINK/UPPER/8/ROTARY	*	1 -100716					
1A	2213-415-350-50	LINK/UPPER/8/ROTARY	*	1 100717-		1			
2	2213-415-200-00	PIN/15X53/UPPER COMP	*	2 -101664					
2A	2213-415-200-10	PIN/15X53/UPPER COMP	*	2 101665-		3			
3	V500-163-002-50	PIN,SPLIT/3 X25	*	2 -101649					
3A	8841-701-062-00	PIN,COTTER/3X25/SUS	*	2 101650-					
4	2213-415-003-00	PIN/18X163	*	1					
5	V500-163-002-50	PIN,SPLIT/3 X25	*	1 -101649					
5A	8841-701-062-00	PIN,COTTER/3X25/SUS	*	1 101650-					
6	4502-205-021-00	WASHER/18X29X02	*	2					
7	2204-537-002-00	BAND	*	6					

FIG. 67 CASE(PLANTING)SYSTEM(F TYPE) (NO.100001-101046)

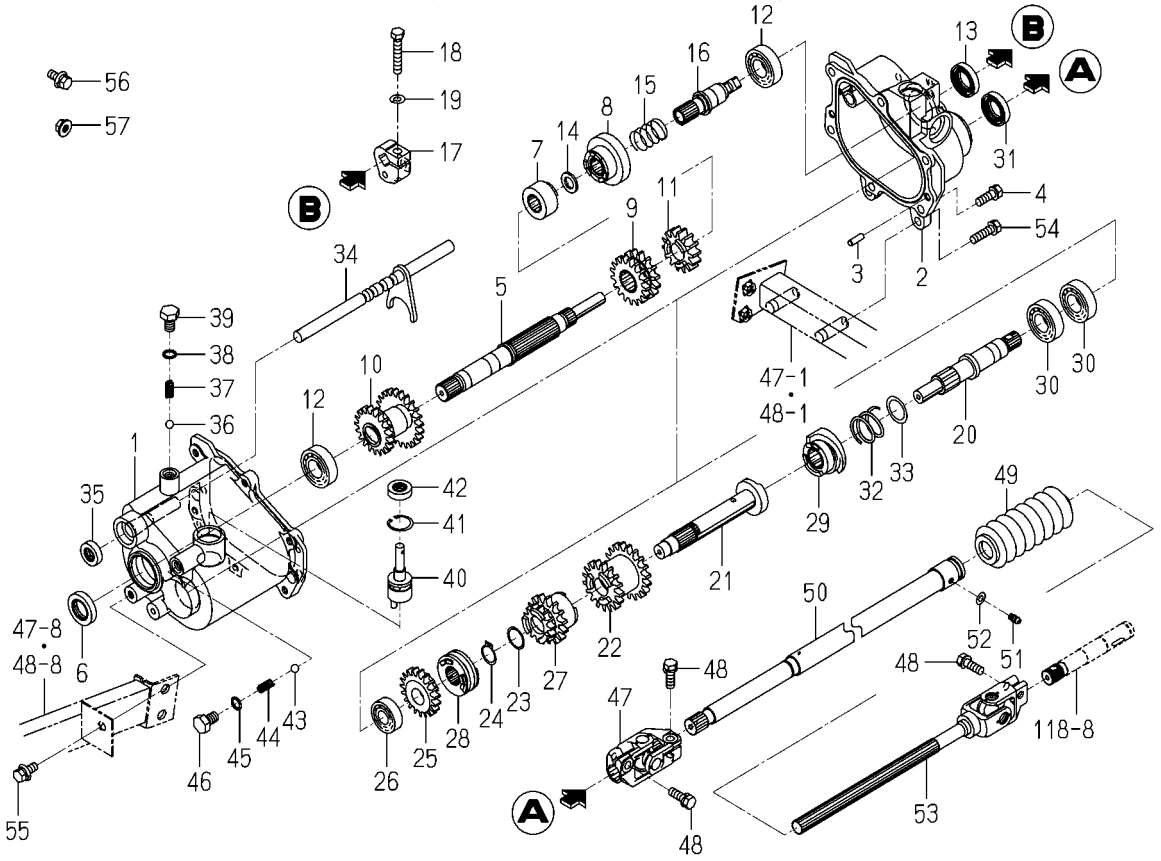

2213-422 -0100

KEY	PART CODE	DESCRIPTION	SPC	TYPE OF MODEL PZ80E16		ITC	COL	GRP	REMARKS
1	2204-422-001-10	CASE/PLANT/CLUTCH	*	1 -101046					
2	2204-422-002-10	COVER/PLANT/CLUTCH	*	1 -101046					
3	V523-100-601-80	PIN	*	2 -101046					
4	V211-260-802-50	BOLT/S	*	6 -101046					
5	2204-422-003-10	SHAFT/PZ/F	*	1 -101046					
6	V744-120-350-70	SEAL,OIL/TC20357	*	1 -101046					
7	2204-422-006-00	CLUTCH/LOCK	*	1 -101046					
8	2213-422-017-00	CLUTCH/MOVABILITY/PZ	*	1 -101046					
9	2204-422-005-00	GEAR,SPUR/15-17	*	1 -101046					
10	2204-422-260-20	GEAR/PLANT	*	1 -101046					
11	2204-422-021-00	GEAR,SPUR/14	*	1 -101046					
12	V600-110-600-40	BEARING,RB/6004	*	2 -101046					
13	V744-120-350-70	SEAL,OIL/TC20357	*	1 -101046					
14	2194-419-070-00	WASHER/13X22X2	*	1 -101046					
15	2204-422-019-00	SPRING/HC035	*	1 -101046					
16	2204-422-074-10	SHAFT/CLUTCH	*	1 -101046					
17	8844-405-019-00	ARM/DRIVE/PZ	*	1 -101046					
18	V201-360-804-50	BOLT/M8X45/7T	*	1 -101046					
19	V401-160-008-00	WASHER,SP/M 8	*	1 -101046					
20	2213-422-041-00	SHAFT(CLUTCH/UETUKE/	*	1 -101046					
21	2204-422-056-10	SHAFT	*	1 -101046					
22	2204-422-069-10	GEAR,SPUR/17-19	*	1 -101046					
23	2204-422-017-10	WASHER/20X25X01	*	1 -101046					
24	V704-140-019-00	RING,SNAP 19	*	1 -101046					
25	2204-422-012-10	GEAR/19	*	1 -101046					
26	V600-110-620-20	BEARING,RB/6202	*	1 -101046					
27	2204-422-068-10	GEAR,SPUR/15-14	*	1 -101046					
28	2204-422-004-00	CLUTCH	*	1 -101046					
29	2186-422-016-50	CLUTCH,PLANTING	*	1 -101046					
30	V600-110-600-40	BEARING,RB/6004	*	2 -101046					

FIG. 67 CASE(PLANTING)SYSTEM(F TYPE) (NO.100001-101046)

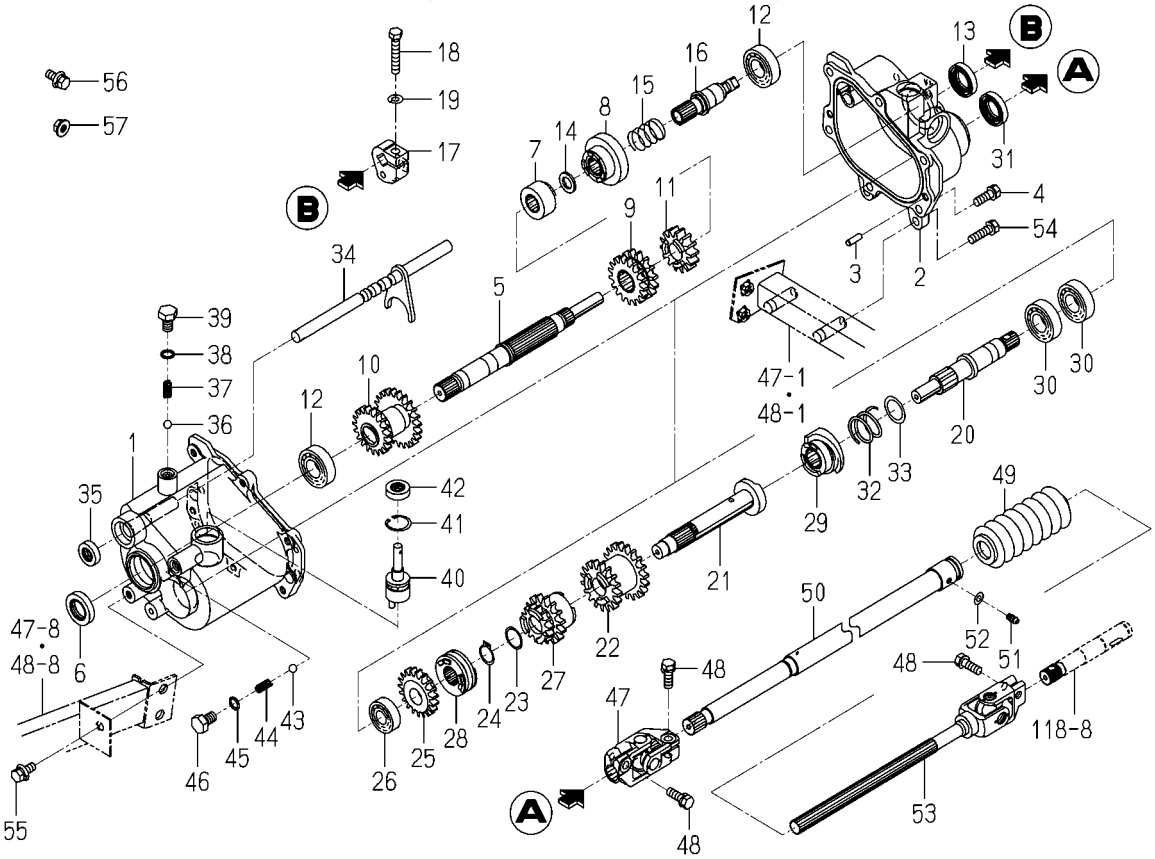

2213-422 -0100

KEY	PART CODE	DESCRIPTION	SPC	TYPE OF MODEL PZ80E16		ITC	COL	GRP	REMARKS
31	V744-120-350-70	SEAL,OIL/TC20357	*	1 -101046					
32	2180-203-002-00	SPRING/HC028	*	1 -101046					
33	4148-401-035-00	SHIM/22X30X01	*	1 -101046					
34	2204-422-200-20	FORK/CHANGE	*	1 -101046					
35	V744-112-250-70	SEAL,OIL/TC12257	*	1 -101046					
36	V682-200-001-00	BALL	*	1 -101046					
37	2132-210-005-00	SPRING/SHIFTER/P	*	1 -101046					
38	V720-101-901-00	O-RING	*	1 -101046					
39	2194-210-001-00	BOLT/10X16/PQ	*	1 -101046					
40	2204-422-330-20	SHIFTER/SPARSE PLANT	*	1 -101046					
41	V705-140-025-00	RING,SNAP/25 C	*	1 -101046					
42	V744-112-250-70	SEAL,OIL/TC12257	*	1 -101046					
43	V682-200-001-00	BALL	*	1 -101046					
44	2132-210-005-00	SPRING/SHIFTER/P	*	1 -101046					
45	V720-101-901-00	O-RING	*	1 -101046					
46	2194-210-001-00	BOLT/10X16/PQ	*	1 -101046					
47	2186-421-032-00	JOINT/UNIVERSAL ASSY	*	1 -101046					
48	V211-560-802-50	BOLT,SEMS/M8X25 7T	*	3 -101046					
49	2145-420-001-20	BOOT/SHAFT	*	1 -101046					
50	2213-422-200-00	SHAFT/PLANTING/PZ8	*	1 -101046					
51	V760-150-000-00	NIPPLE,GREASE	*	1 -101046					
52	V411-260-006-00	WASHER / M6	*	1 -101046					
53	2213-422-220-00	JOINT/PLANTING/ COMP	*	1 -101046					
54	V211-260-803-00	BOLT,SEMS	*	2 -101046					
55	V211-360-802-00	BOLT/SP	*	1 -101046					
56	V211-360-802-00	BOLT/SP	*	2 -101046					
57	V362-260-008-00	NUT/WASHER	*	1 -101046					

FIG. 68 CASE(PLANTING)SYSTEM (EXCEPT F TYPE)(NO.100001-101046)

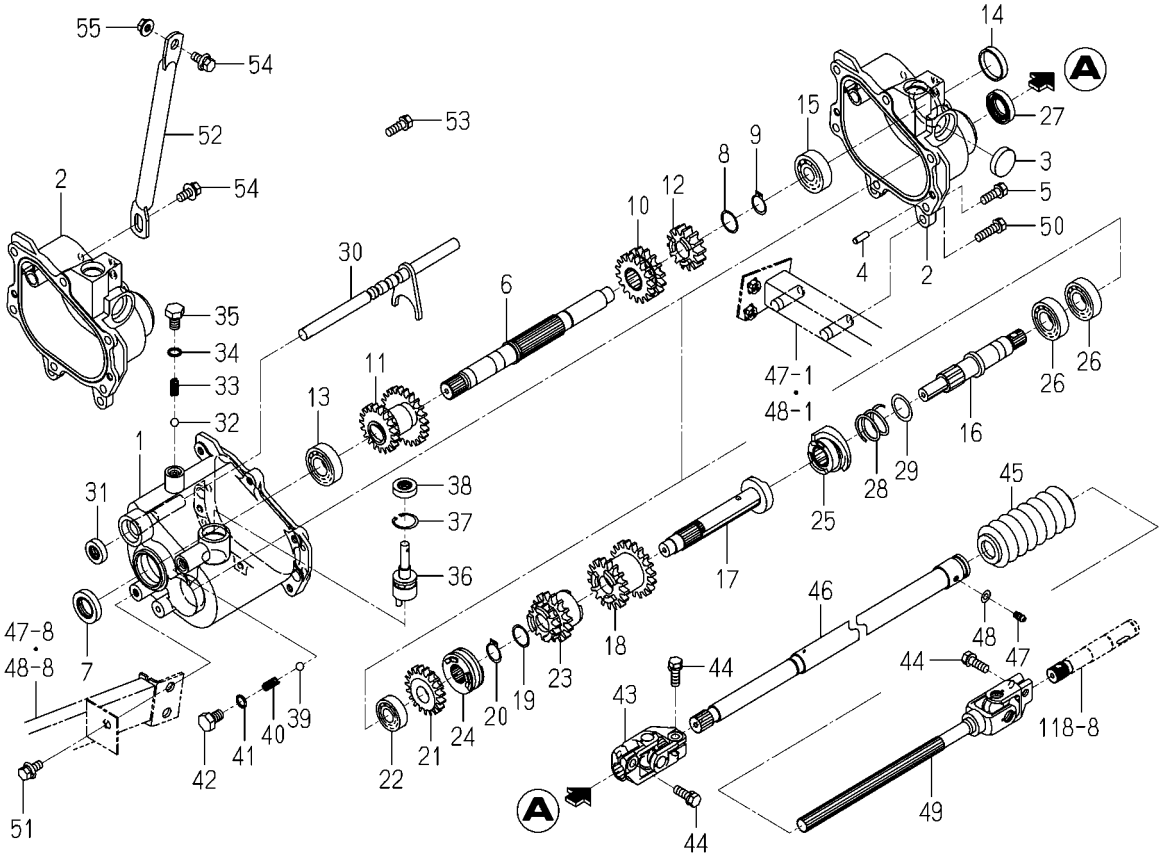

2213-422B-0100

KEY	PART CODE	DESCRIPTION	SPC	TYPE OF MODEL PZ80E16		ITC	COL	GRP	REMARKS
1	2204-422-001-10	CASE/PLANT/CLUTCH	*	1 -101046					
2	2204-422-002-10	COVER/PLANT/CLUTCH	*	1 -101046					
3	3625-540-004-00	CAP,BLANK/30	*	1 -101046					
4	V523-100-601-80	PIN	*	2 -101046					
5	V211-260-802-50	BOLT/S	*	6 -101046					
6	2204-422-027-00	SHAFT/PZ	*	1 -101046					
7	V744-120-350-70	SEAL,OIL/TC20357	*	1 -101046					
8	2204-422-017-10	WASHER/20X25X01	*	1 -101046					
9	V704-140-019-00	RING,SNAP 19	*	1 -101046					
10	2204-422-005-00	GEAR,SPUR/15-17	*	1 -101046					
11	2204-422-260-20	GEAR/PLANT	*	1 -101046					
12	2204-422-021-00	GEAR,SPUR/14	*	1 -101046					
13	V600-110-600-40	BEARING,RB/6004	*	1 -101046					
14	3737-211-007-00	CAP/35	*	1 -101046					
15	V600-110-630-20	BEARING,RB/6302	*	1 -101046					
16	2213-422-041-00	SHAFT(CLUTCH/UETUKE/	*	1 -101046					
17	2204-422-056-10	SHAFT	*	1 -101046					
18	2204-422-069-10	GEAR,SPUR/17-19	*	1 -101046					
19	2204-422-017-10	WASHER/20X25X01	*	1 -101046					
20	V704-140-019-00	RING,SNAP 19	*	1 -101046					
21	2204-422-012-10	GEAR/19	*	1 -101046					
22	V600-110-620-20	BEARING,RB/6202	*	1 -101046					
23	2204-422-068-10	GEAR,SPUR/15-14	*	1 -101046					
24	2204-422-004-00	CLUTCH	*	1 -101046					
25	2186-422-016-50	CLUTCH,PLANTING	*	1 -101046					
26	V600-110-600-40	BEARING,RB/6004	*	2 -101046					
27	V744-120-350-70	SEAL,OIL/TC20357	*	1 -101046					
28	2180-203-002-00	SPRING/HC028	*	1 -101046					
29	4148-401-035-00	SHIM/22X30X01	*	1 -101046					
30	2204-422-200-20	FORK/CHANGE	*	1 -101046					

FIG. 68 CASE(PLANTING)SYSTEM (EXCEPT F TYPE)(NO.100001-101046)

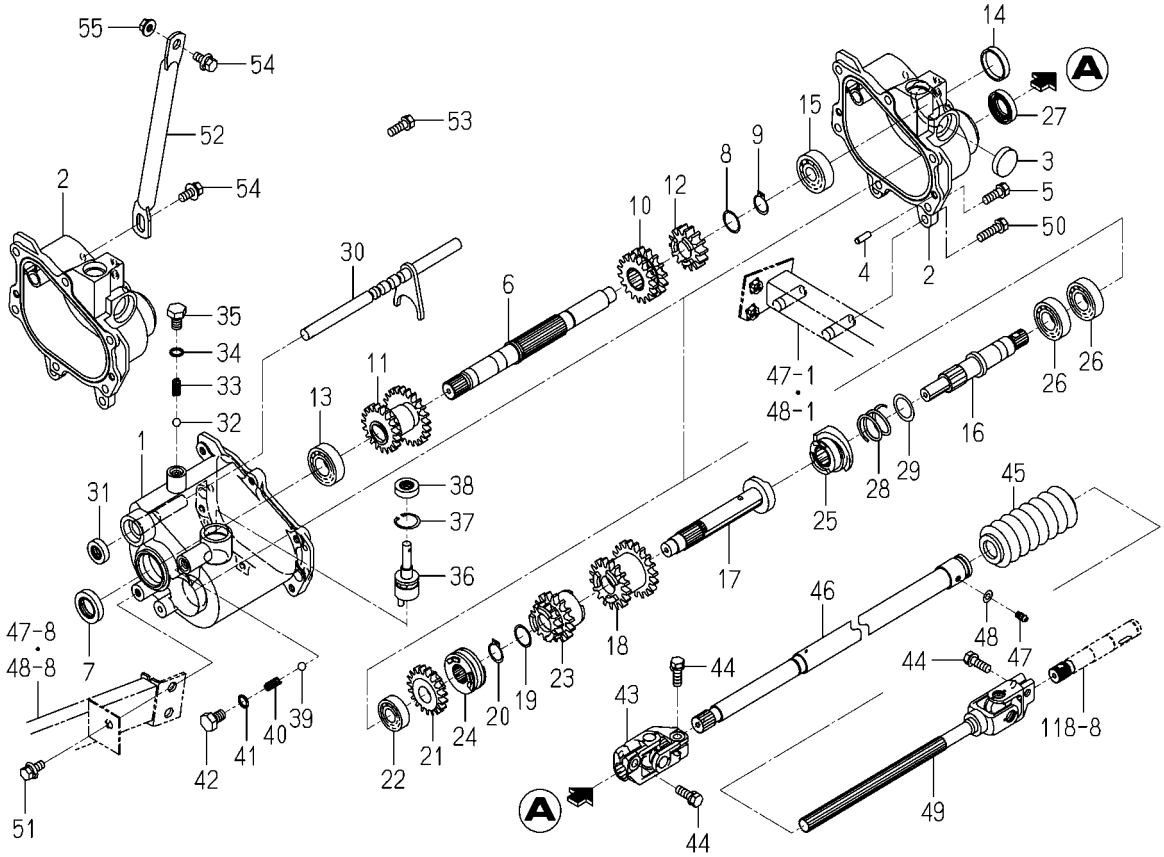

2213-422B-0100

KEY	PART CODE	DESCRIPTION	SPC	TYPE OF MODEL PZ80E16		ITC	COL	GRP	REMARKS
31	V744-112-250-70	SEAL,OIL/TC12257	*	1 -101046					
32	V682-200-001-00	BALL	*	1 -101046					
33	2132-210-005-00	SPRING/SHIFTER/P	*	1 -101046					
34	V720-101-901-00	O-RING	*	1 -101046					
35	2194-210-001-00	BOLT/10X16/PQ	*	1 -101046					
36	2204-422-330-20	SHIFTER/SPARSE PLANT	*	1 -101046					
37	V705-140-025-00	RING,SNAP/25 C	*	1 -101046					
38	V744-112-250-70	SEAL,OIL/TC12257	*	1 -101046					
39	V682-200-001-00	BALL	*	1 -101046					
40	2132-210-005-00	SPRING/SHIFTER/P	*	1 -101046					
41	V720-101-901-00	O-RING	*	1 -101046					
42	2194-210-001-00	BOLT/10X16/PQ	*	1 -101046					
43	2186-421-032-00	JOINT/UNIVERSAL ASSY	*	1 -101046					
44	V211-560-802-50	BOLT,SEMS/M8X25 7T	*	3 -101046					
45	2145-420-001-20	BOOT/SHAFT	*	1 -101046					
46	2213-422-200-00	SHAFT/PLANTING/PZ8	*	1 -101046					
47	V760-150-000-00	NIPPLE,GREASE	*	1 -101046					
48	V411-260-006-00	WASHER / M6	*	1 -101046					
49	2213-422-220-00	JOINT/PLANTING/ COMP	*	1 -101046					
50	V211-260-803-00	BOLT,SEMS	*	2 -101046					
51	V211-360-802-00	BOLT/SP	*	1 -101046					
52	2213-422-015-00	TUBE/STAY/CASE	*	1 -101046					
53	V211-560-802-50	BOLT,SEMS/M8X25 7T	*	2 -101046					
54	V211-360-802-00	BOLT/SP	*	2 -101046					
55	V362-260-008-00	NUT/WASHER	*	1 -101046					

FIG. 69 (F TYPE)(NO.101047-)
CASE(PLANTING)SYSTEM

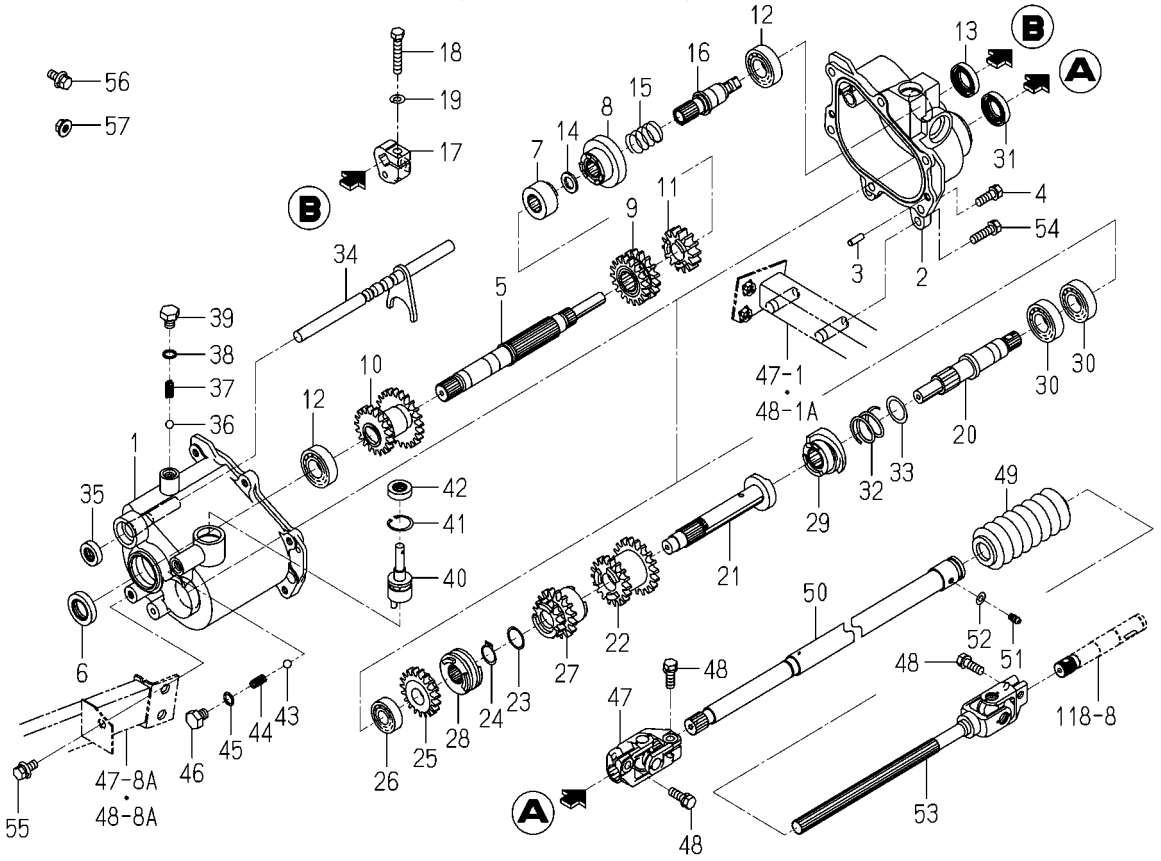

2213-422H-0100

KEY	PART CODE	DESCRIPTION	SPC	TYPE OF MODEL PZ80E16		ITC	COL	GRP	REMARKS
1	2204-422-001-10	CASE/PLANT/CLUTCH	*	1 101047-					
2	2204-422-002-10	COVER/PLANT/CLUTCH	*	1 101047-					
3	V523-100-601-80	PIN	*	2 101047-					
4	V211-260-802-50	BOLT/S	*	6 101047-					
5	2204-422-003-10	SHAFT/PZ/F	*	1 101047-					
6	V744-120-350-70	SEAL,OIL/TC20357	*	1 101047-					
7	2204-422-006-10	CLUTCH/FIX/PZ	*	1 101047-					
8	2213-422-017-00	CLUTCH/MOVABILITY/PZ	*	1 101047-					
9	2213-422-018-00	GEAR/SPUR/16-18	*	1 101047-					
10	2204-422-260-20	GEAR/PLANT	*	1 101047-					
11	2204-422-021-00	GEAR,SPUR/14	*	1 101047-					
12	V600-110-600-40	BEARING,RB/6004	*	2 101047-					
13	V744-120-350-70	SEAL,OIL/TC20357	*	1 101047-					
14	2194-419-070-00	WASHER/13X22X2	*	1 101047-					
15	2204-422-019-00	SPRING/HC035	*	1 101047-					
16	2204-422-074-10	SHAFT/CLUTCH	*	1 101047-					
17	8844-405-019-00	ARM/DRIVE/PZ	*	1 101047-					
18	V201-360-804-50	BOLT/M8X45/7T	*	1 101047-					
19	V401-160-008-00	WASHER,SP/M 8	*	1 101047-					
20	2213-422-041-00	SHAFT(CLUTCH/UETUKE/	*	1 101047-					
21	2204-422-056-10	SHAFT	*	1 101047-					
22	2213-422-021-00	GEAR/SPUR/18-19	*	1 101047-					
23	2204-422-017-10	WASHER/20X25X01	*	1 101047-					
24	V704-140-019-00	RING,SNAP 19	*	1 101047-					
25	2204-422-012-10	GEAR/19	*	1 101047-					
26	V600-110-620-20	BEARING,RB/6202	*	1 101047-					
27	2213-422-019-00	GEAR/SPUR/16-14	*	1 101047-					
28	2204-422-004-10	CLUTCH/CHANGE/SPARSE	*	1 101047-					
29	2186-422-016-60	CLUTCH/PLANTING	*	1 101047-					
30	V600-110-600-40	BEARING,RB/6004	*	2 101047-					

FIG. 69 (F TYPE)(NO.101047-)
CASE(PLANTING)SYSTEM

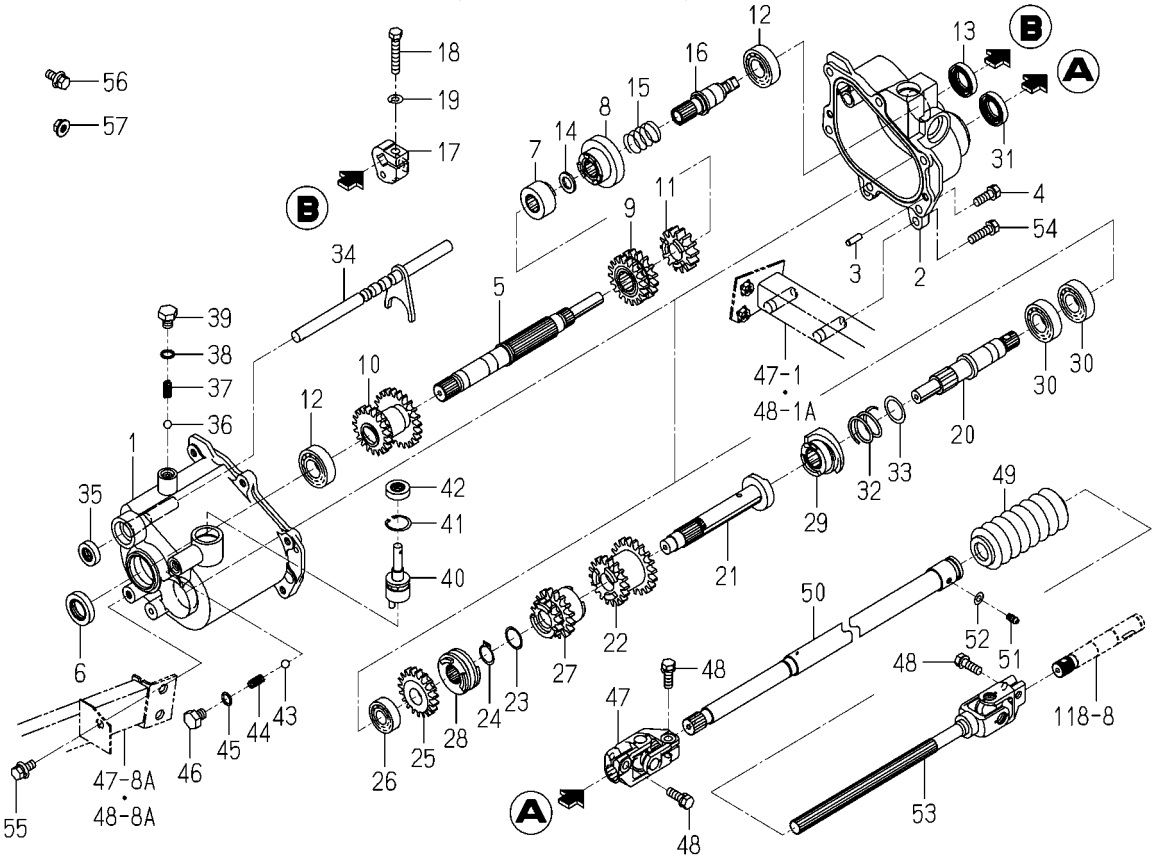

2213-422H-0100

KEY	PART CODE	DESCRIPTION	SPC	TYPE OF MODEL PZ80E16		ITC	COL	GRP	REMARKS
31	V744-120-350-70	SEAL,OIL/TC20357	*	1 101047-					
32	2180-203-002-00	SPRING/HC028	*	1 101047-					
33	4148-401-035-00	SHIM/22X30X01	*	1 101047-					
34	2204-422-200-20	FORK/CHANGE	*	1 101047-					
35	V744-112-250-70	SEAL,OIL/TC12257	*	1 101047-					
36	V682-200-001-00	BALL	*	1 101047-					
37	2213-422-022-00	SPRING/HC021	*	1 101047-					
38	V720-101-901-00	O-RING	*	1 101047-					
39	2201-201-002-00	BOLT/M10X12	*	1 101047-					
40	2204-422-330-20	SHIFTER/SPARSE PLANT	*	1 101047-					
41	V705-140-025-00	RING,SNAP/25 C	*	1 101047-					
42	V744-112-250-70	SEAL,OIL/TC12257	*	1 101047-					
43	V682-200-001-00	BALL	*	1 101047-					
44	2213-422-022-00	SPRING/HC021	*	1 101047-					
45	V720-101-901-00	O-RING	*	1 101047-					
46	2201-201-002-00	BOLT/M10X12	*	1 101047-					
47	2186-421-032-00	JOINT/UNIVERSAL ASSY	*	1 101047-					
48	V211-560-802-50	BOLT,SEMS/M8X25 7T	*	3 101047-					
49	2145-420-001-20	BOOT/SHAFT	*	1 101047-					
50	2213-422-200-00	SHAFT/PLANTING/PZ8	*	1 101047-					
51	V760-150-000-00	NIPPLE,GREASE	*	1 101047-					
52	V411-260-006-00	WASHER / M6	*	1 101047-					
53	2213-422-220-10	JOINT/PLANTING/ COMP	*	1 101047-		1			
54	V211-260-803-00	BOLT,SEMS	*	2 101047-					
55	V211-360-802-00	BOLT/SP	*	1 101047-					
56	V211-360-802-00	BOLT/SP	*	2 101047-					
57	V362-260-008-00	NUT/WASHER	*	1 101047-					

FIG. 70 CASE(PLANTING)SYSTEM (EXCEPT F TYPE)(NO.101047-)

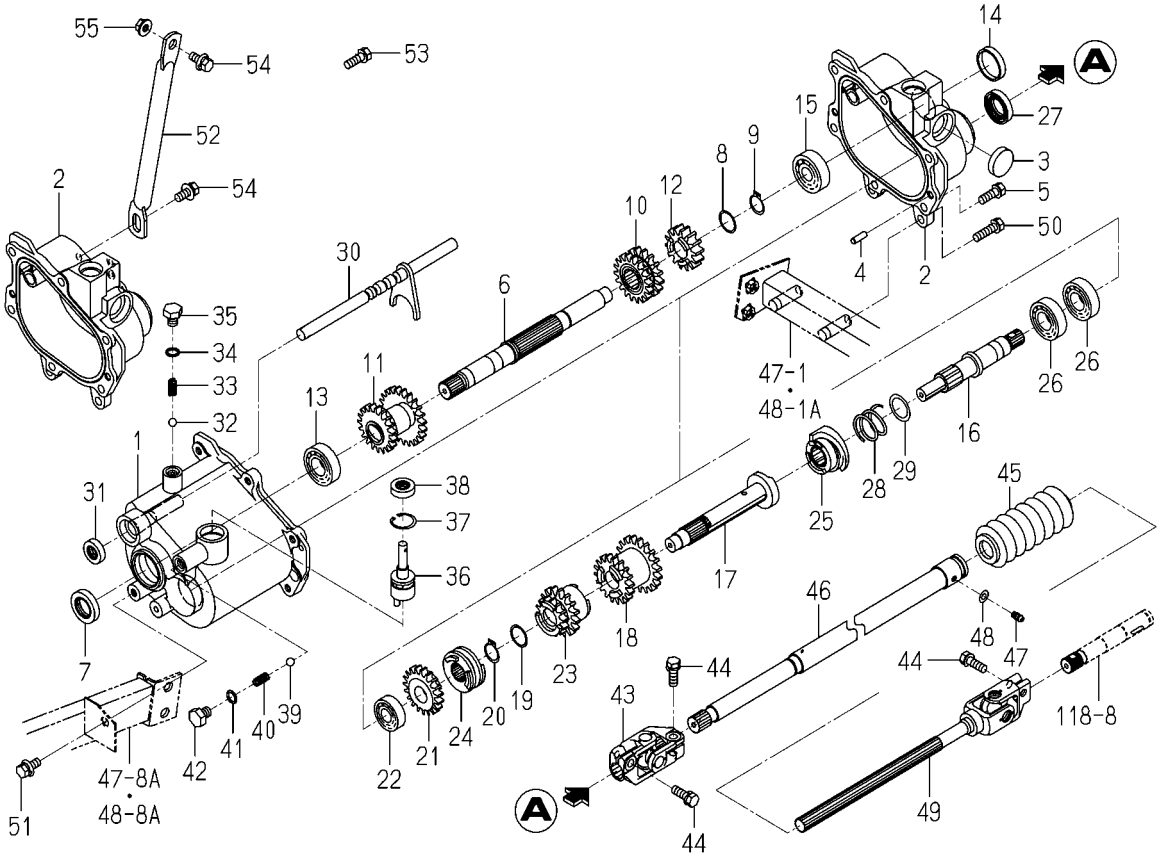

2213-422I-0100

KEY	PART CODE	DESCRIPTION	SPC	TYPE OF MODEL PZ80E16		ITC	COL	GRP	REMARKS
1	2204-422-001-10	CASE/PLANT/CLUTCH	*	1 101047-					
2	2204-422-002-10	COVER/PLANT/CLUTCH	*	1 101047-					
3	3625-540-004-00	CAP,BLANK/30	*	1 101047-					
4	V523-100-601-80	PIN	*	2 101047-					
5	V211-260-802-50	BOLT/S	*	6 101047-					
6	2204-422-027-00	SHAFT/PZ	*	1 101047-					
7	V744-120-350-70	SEAL,OIL/TC20357	*	1 101047-					
8	2204-422-017-10	WASHER/20X25X01	*	1 101047-					
9	V704-140-019-00	RING,SNAP 19	*	1 101047-					
10	2213-422-018-00	GEAR/SPUR/16-18	*	1 101047-					
11	2204-422-260-20	GEAR/PLANT	*	1 101047-					
12	2204-422-021-00	GEAR,SPUR/14	*	1 101047-					
13	V600-110-600-40	BEARING,RB/6004	*	1 101047-					
14	3737-211-007-00	CAP/35	*	1 101047-					
15	V600-110-630-20	BEARING,RB/6302	*	1 101047-					
16	2213-422-041-00	SHAFT(CLUTCH/UETUKE/	*	1 101047-					
17	2204-422-056-10	SHAFT	*	1 101047-					
18	2213-422-021-00	GEAR/SPUR/18-19	*	1 101047-					
19	2204-422-017-10	WASHER/20X25X01	*	1 101047-					
20	V704-140-019-00	RING,SNAP 19	*	1 101047-					
21	2204-422-012-10	GEAR/19	*	1 101047-					
22	V600-110-620-20	BEARING,RB/6202	*	1 101047-					
23	2213-422-019-00	GEAR/SPUR/16-14	*	1 101047-					
24	2204-422-004-10	CLUTCH/CHANGE/SPARSE	*	1 101047-					
25	2186-422-016-60	CLUTCH/PLANTING	*	1 101047-					
26	V600-110-600-40	BEARING,RB/6004	*	2 101047-					
27	V744-120-350-70	SEAL,OIL/TC20357	*	1 101047-					
28	2180-203-002-00	SPRING/HC028	*	1 101047-					
29	4148-401-035-00	SHIM/22X30X01	*	1 101047-					
30	2204-422-200-20	FORK/CHANGE	*	1 101047-					

FIG. 70 CASE(PLANTING)SYSTEM (EXCEPT F TYPE)(NO.101047-)

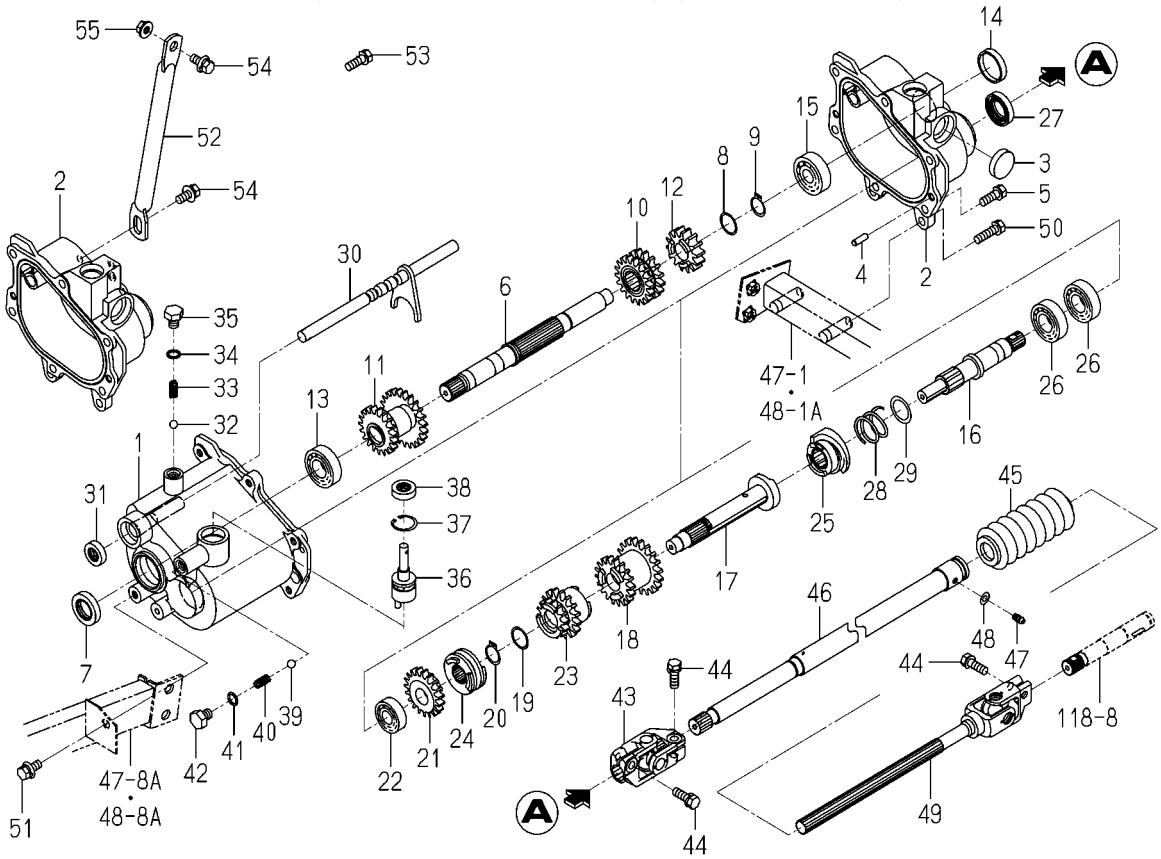

2213-422I-0100

KEY	PART CODE	DESCRIPTION	SPC	TYPE OF MODEL PZ80E16		ITC	COL	GRP	REMARKS
31	V744-112-250-70	SEAL,OIL/TC12257	*	1 101047-					
32	V682-200-001-00	BALL	*	1 101047-					
33	2213-422-022-00	SPRING/HC021	*	1 101047-					
34	V720-101-901-00	O-RING	*	1 101047-					
35	2201-201-002-00	BOLT/M10X12	*	1 101047-					
36	2204-422-330-20	SHIFTER/SPARSE PLANT	*	1 101047-					
37	V705-140-025-00	RING,SNAP/25 C	*	1 101047-					
38	V744-112-250-70	SEAL,OIL/TC12257	*	1 101047-					
39	V682-200-001-00	BALL	*	1 101047-					
40	2213-422-022-00	SPRING/HC021	*	1 101047-					
41	V720-101-901-00	O-RING	*	1 101047-					
42	2201-201-002-00	BOLT/M10X12	*	1 101047-					
43	2186-421-032-00	JOINT/UNIVERSAL ASSY	*	1 101047-					
44	V211-560-802-50	BOLT,SEMS/M8X25 7T	*	3 101047-					
45	2145-420-001-20	BOOT/SHAFT	*	1 101047-					
46	2213-422-200-00	SHAFT/PLANTING/PZ8	*	1 101047-					
47	V760-150-000-00	NIPPLE,GREASE	*	1 101047-					
48	V411-260-006-00	WASHER / M6	*	1 101047-					
49	2213-422-220-10	JOINT/PLANTING/ COMP	*	1 101047-		1			
50	V211-260-803-00	BOLT,SEMS	*	2 101047-					
51	V211-360-802-00	BOLT/SP	*	1 101047-					
52	2213-422-015-00	TUBE/STAY/CASE	*	1 101047-					
53	V211-560-802-50	BOLT,SEMS/M8X25 7T	*	2 101047-					
54	V211-360-802-00	BOLT/SP	*	2 101047-					
55	V362-260-008-00	NUT/WASHER	*	1 101047-					

FIG. 71 MOTOR(PLANTING)SYSTEM (EXCEPT F TYPE)

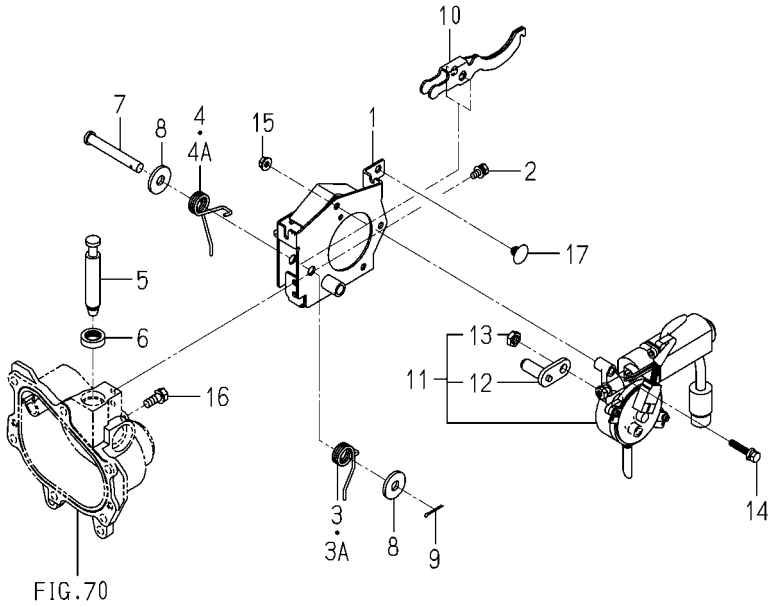

2213-423 -0100

KEY	PART CODE	DESCRIPTION	SPC	TYPE OF MODEL PZ80E16		ITC	COL	GRP	REMARKS
1	2204-422-220-10	PLATE/BASE/MOTOR	*	1					
2	V210-360-601-60	BOLT(SP)/M6X16	*	2					
3	2204-422-084-00	SPRING/HT020/L	*	1 -102194					
3A	2204-422-084-10	SPRING/HT020/LH	*	1 102195-		1			
4	2204-422-085-00	SPRING/HT020/R	*	1 -102194					
4A	2204-422-085-10	SPRING/HT020/RH	*	1 102195-		1			
5	2204-422-078-10	PIN	*	1					
6	V744-115-250-70	SEAL,OIL/TC15257	*	1					
7	1376-106-001-00	PIN 10X68	*	1					
8	3567-401-002-00	WASHER,ROLLER PIN	*	2					
9	V500-162-502-00	PIN,SPLIT/2.5X20	*	1					
10	2204-422-023-20	ARM,SEEDING-CLUTCH	*	1					
11	2204-422-760-40	MOTOR/PLANT	*	1					
12	2204-422-730-30	ARM/MOTOR/PLANT	*	1					
13	V305-260-008-00	NUT/M 8	*	1					
14	V210-360-603-00	BOLT/SP	*	3					
15	V360-260-006-00	NUT/M6	*	3					
16	2161-214-003-00	BOLT	*	1					
17	2186-508-017-00	CLIP,MAT/SUNSET	*	2					

FIG. 72 MOTOR(PLANTING)SYSTEM(F TYPE)

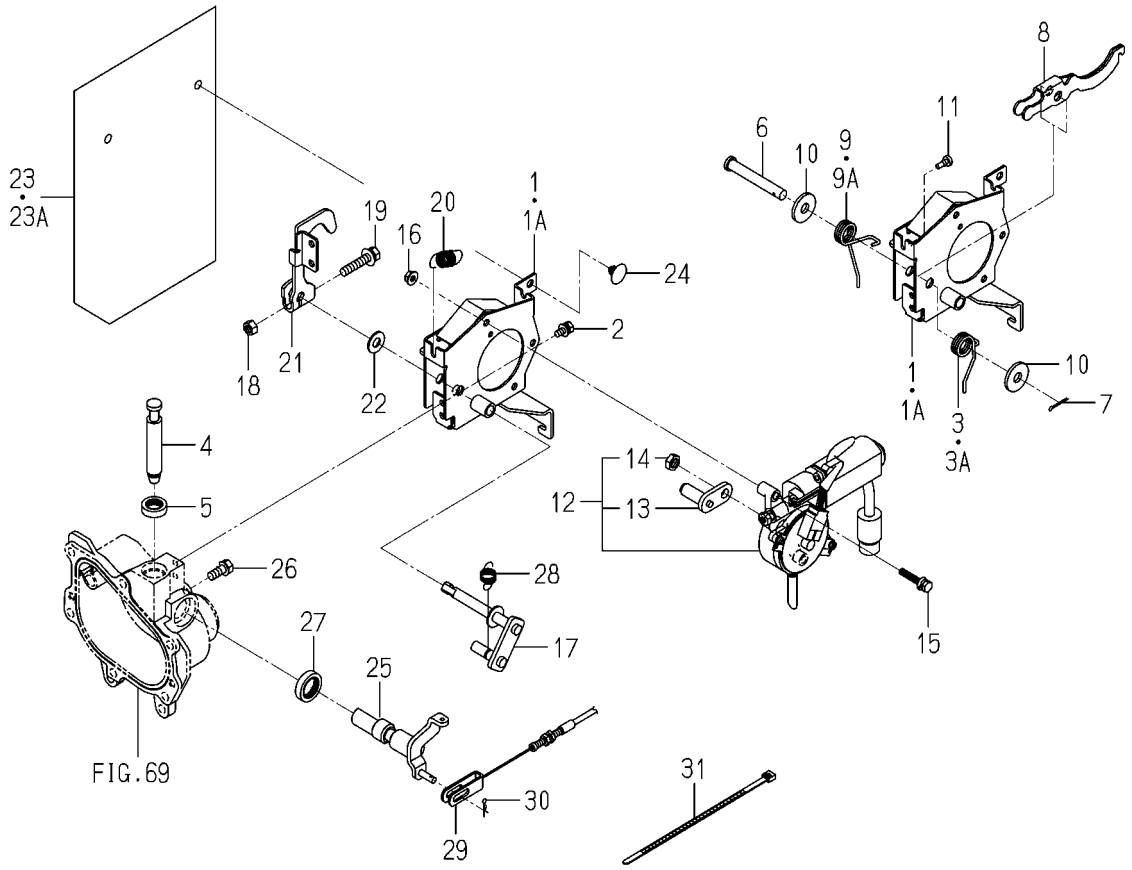

2213-423F-0100

KEY	PART CODE	DESCRIPTION	SPC	TYPE OF MODEL PZ80E16		ITC	COL	GRP	REMARKS
1	2213-422-350-10	BASE/MOTOR/8 COMP	*	1 -102400					
1A	2213-422-350-20	BASE/MOTOR/8 COMP	*	1 102401-		1			
2	V210-360-601-60	BOLT(SP)/M6X16	*	2					
3	2204-422-084-00	SPRING/HT020/L	*	1 -102194					
3A	2204-422-084-10	SPRING/HT020/LH	*	1 102195-		1			
4	2204-422-078-10	PIN	*	1					
5	V744-115-250-70	SEAL,OIL/TC15257	*	1					
6	1376-106-001-00	PIN 10X68	*	1					
7	V500-162-502-00	PIN,SPLIT/2.5X20	*	1					
8	2204-422-023-20	ARM,SEEDING-CLUTCH	*	1					
9	2204-422-085-00	SPRING/HT020/R	*	1 -102194					
9A	2204-422-085-10	SPRING/HT020/RH	*	1 102195-		1			
10	3567-401-002-00	WASHER,ROLLER PIN	*	2					
11	2144-820-006-30	ARM,STOPPER	*	1					
12	2204-422-760-40	MOTOR/PLANT	*	1					
13	2204-422-730-30	ARM/MOTOR/PLANT	*	1					
14	V305-260-008-00	NUT/M 8	*	1					
15	V210-360-603-00	BOLT/SP	*	3					
16	V360-260-006-00	NUT/M6	*	3					
17	2213-422-820-00	PIN/FERTILIZE/8 COMP	*	1					
18	V304-260-008-00	NUT	*	1					
19	V211-360-804-00	BOLT	*	1					
20	2204-422-083-10	SPRING/HE046	*	1					
21	2204-422-840-30	PLATE/FERTILIZE CLUT	*	1					
22	V411-260-010-00	WASHER/M10	*	1					
23	2204-422-095-10	COVER/MOTOR	*	1 -100472					
23A	2204-422-095-20	COVER/MOTOR/PLANTING	*	1 100473-		1			
24	2186-508-017-00	CLIP,MAT/SUNSET	*	2					
25	2213-422-340-10	SHAFT/FERTILIZE CLUT	*	1					
26	2161-214-003-00	BOLT	*	1					

FIG. 72 MOTOR(PLANTING)SYSTEM(F TYPE)

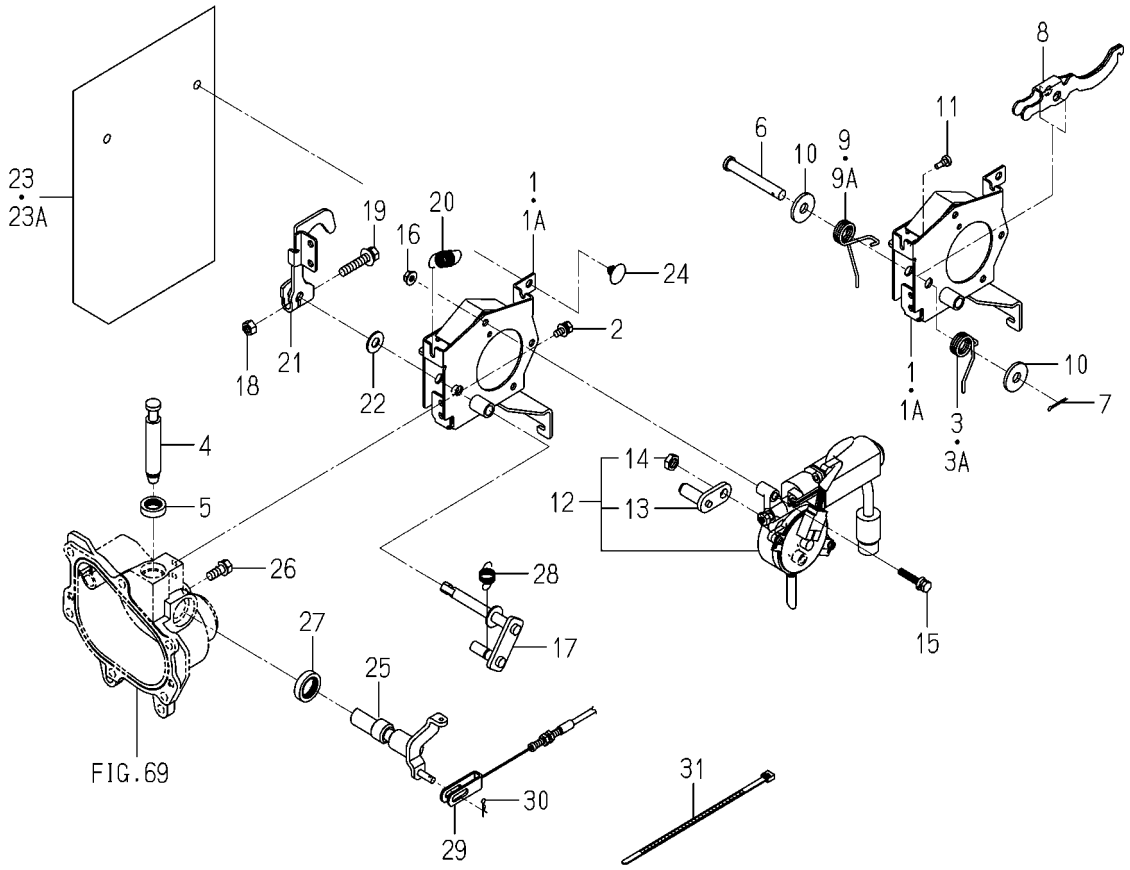

2213-423F-0100

KEY	PART CODE	DESCRIPTION	SPC	TYPE OF MODEL PZ80E16		ITC	COL	GRP	REMARKS
27	V744-120-300-70	SEAL,OIL/TC20307	*	1					
28	2213-422-013-10	SPRING/HT024	*	1					
29	8844-765-320-10	CABLE/CLUTCH/PZ	*	1					
30	2130-601-018-00	PIN,SNAP/6	*	1					
31	1376-402-003-00	BAND,WIRE/140	*	1 100001-					

FIG. 73 LEVER (PLANTING INTERVAL)SYSTEM(D TYPE)

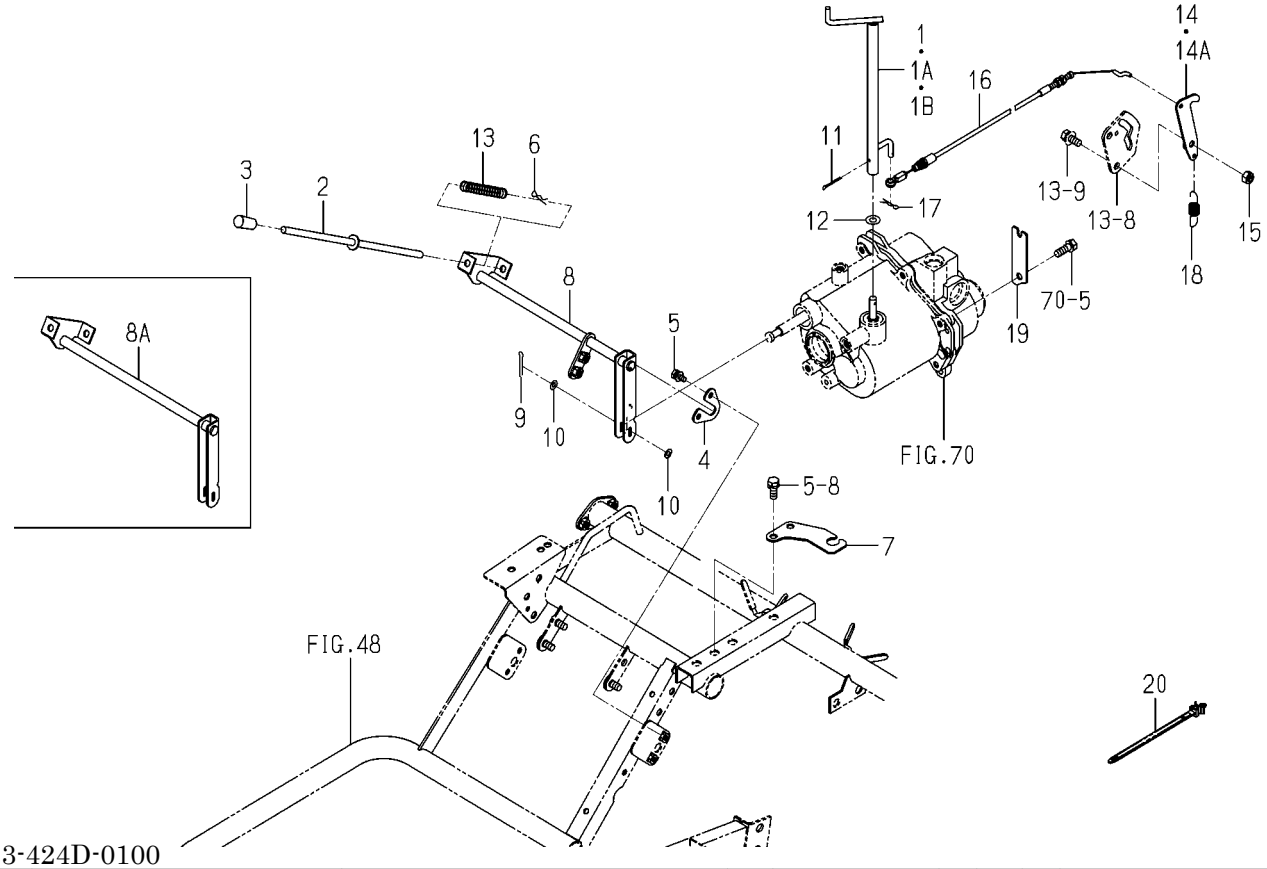

2213-424D-0100

KEY	PART CODE	DESCRIPTION	SPC	TYPE OF MODEL PZ80E16		ITC	COL	GRP	REMARKS
1	2213-422-610-20	LEVER/PZ	*	1 -101046					
1A	2213-422-610-30	LEVER/PZ	*	1 -101649		1			
1B	2213-422-610-40	LEVER/PZ	*	1 101650-		1			
2	2213-422-260-10	LEVER/INTERVAL/ COMP	*	1					
3	3838-620-002-00	GRIP/07X34	*	1					
4	2213-422-001-00	PLATE/INTERVAL	*	1					
5	V210-360-601-60	BOLT(SP)/M6X16	*	2					
6	V560-160-008-00	PIN/SNAP	*	1					
7	2213-422-012-10	STAY/LEVER/PLANT INT	*	1					
8	2213-422-250-10	ARM/PLANTING CLUTCH/	*	1 -102260					
8A	2213-422-250-20	ARM/PLANTING CLUTCH/	*	1 102261-		1			
9	V500-164-002-50	PIN,SPLIT/4 X25	*	1					
10	V411-260-005-00	WASHER	*	2					
11	V500-163-002-50	PIN,SPLIT/3 X25	*	1					
12	V411-260-008-00	WASHER,PL/M 8	*	1 -102262					
13	2213-422-007-00	SPRING/HC080	*	1					
14	2213-422-290-00	PLATE/CONTROL	*	1 -102349					
14A	2213-422-290-10	PLATE/SPEED COMP	*	1 102350-		1			
15	2144-117-002-00	NUT/M8	*	1					
16	2213-422-008-00	CABLE/VELOCITY/RESTR	*	1					
17	V560-160-008-00	PIN/SNAP	*	1 100001-					
18	2213-422-002-00	SPRING/HE050	*	1					
19	2213-422-011-00	PLATE/OUTER/RECEIVIN	*	1					
20	2204-537-002-00	BAND	*	1					

FIG. 74 LEVER (PLANTING INTERVAL)SYSTEM(G TYPE)

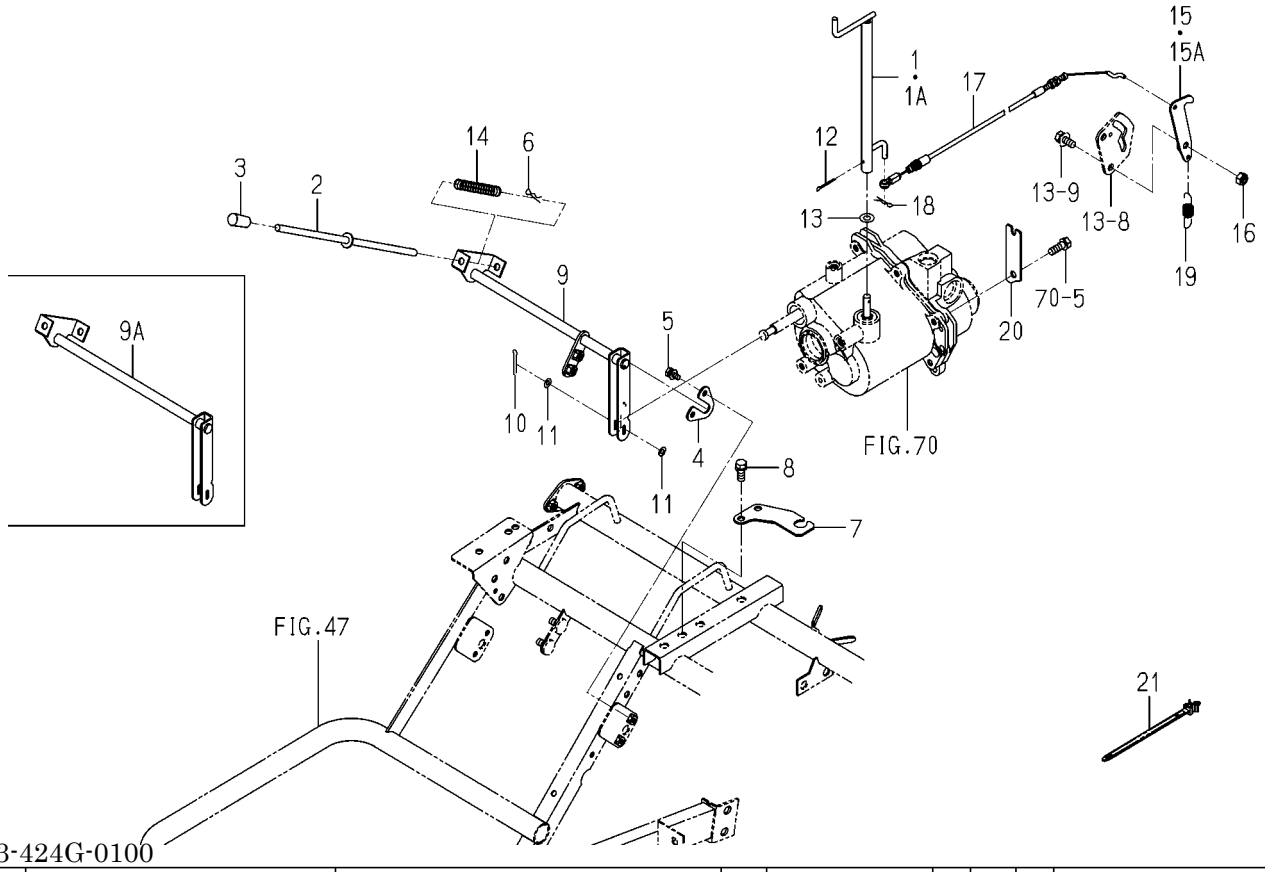

2213-424G-0100

KEY	PART CODE	DESCRIPTION	SPC	TYPE OF MODEL PZ80E16		ITC	COL	GRP	REMARKS
1	2213-422-630-20	LEVER/SPARSE PLANTIN	*	1 -101649					
1A	2213-422-630-30	LEVER/SPARSE PLANTIN	*	1 101650-		1			
2	2213-422-260-10	LEVER/INTERVAL/ COMP	*	1					
3	3838-620-002-00	GRIP/07X34	*	1					
4	2213-422-001-00	PLATE/INTERVAL	*	1					
5	V210-360-601-60	BOLT(SP)/M6X16	*	2					
6	V560-160-008-00	PIN/SNAP	*	1					
7	2213-422-012-10	STAY/LEVER/PLANT INT	*	1					
8	V211-260-802-00	BOLT/S	*	2					
9	2213-422-250-10	ARM/PLANTING CLUTCH/	*	1 -102260					
9A	2213-422-250-20	ARM/PLANTING CLUTCH/	*	1 102261-		1			
10	V500-164-002-50	PIN,SPLIT/4 X25	*	1					
11	V411-260-005-00	WASHER	*	2					
12	V500-163-002-50	PIN,SPLIT/3 X25	*	1					
13	V411-260-008-00	WASHER,PL/M 8	*	1 -102262					
14	2213-422-007-00	SPRING/HC080	*	1					
15	2213-422-290-00	PLATE/CONTROL	*	1 -102349					
15A	2213-422-290-10	PLATE/SPEED COMP	*	1 102350-		1			
16	2144-117-002-00	NUT/M8	*	1					
17	2213-422-008-00	CABLE/VELOCITY/RESTR	*	1					
18	V560-160-008-00	PIN/SNAP	*	1 100001-					
19	2213-422-002-00	SPRING/HE050	*	1					
20	2213-422-011-00	PLATE/OUTER/RECEIVIN	*	1					
21	2204-537-002-00	BAND	*	1					

FIG. 75 VALVE SYSTEM

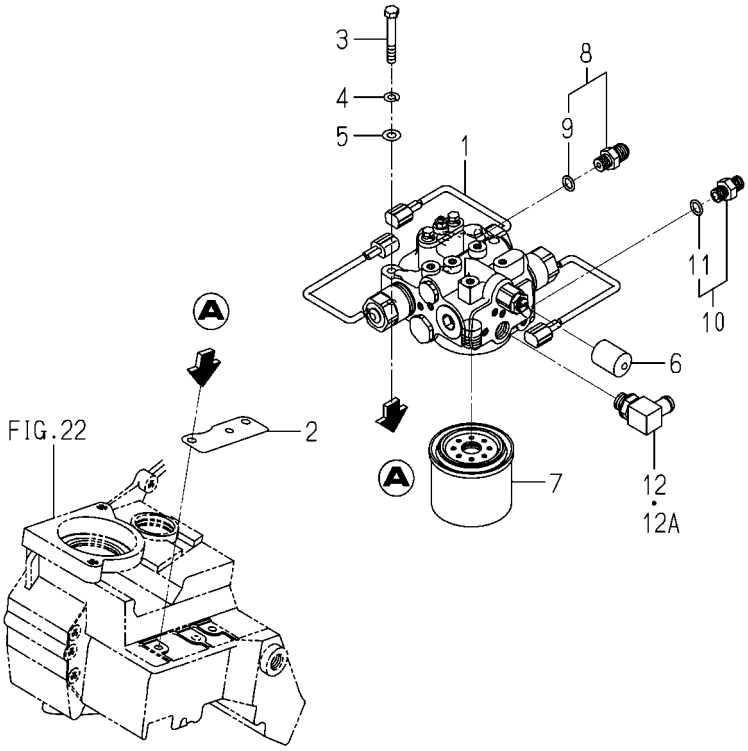

2213-435 -0100

KEY	PART CODE	DESCRIPTION	SPC	TYPE OF MODEL PZ80E16		ITC	COL	GRP	REMARKS
1	K200-181-000-40	VALVE/MAIN/PZ8 ASSY	*	1					FIG 190
2	2204-435-006-00	SPACER/VALVE	*	1					
3	V201-260-805-50	BOLT/M 8X55	*	2 100001-					
4	V401-160-008-00	WASHER,SP/M 8	*	2 100001-					
5	V411-260-008-00	WASHER,PL/M 8	*	2 100001-					
6	2204-435-001-00	CAP/22X30	*	1					
7	1608-206-260-00	CARTRIDGE ASSY	*	1					
8	1650-509-280-00	ADAPTER/PF1/4 ASSY	*	1					
9	V720-112-401-10	RING/O	*	1					
10	3829-387-410-00	ADPTER/G1/4.1/4	*	1					
11	V720-112-401-10	RING/O	*	1					
12	2204-131-011-00	ADAPTER/G3/816 ASSY	*	1 -100472					
12A	2204-131-011-00	ADAPTER/G3/816 ASSY	*	1 100473-					

FIG. 76 CONTROLLER(STEERING)SYSTEM

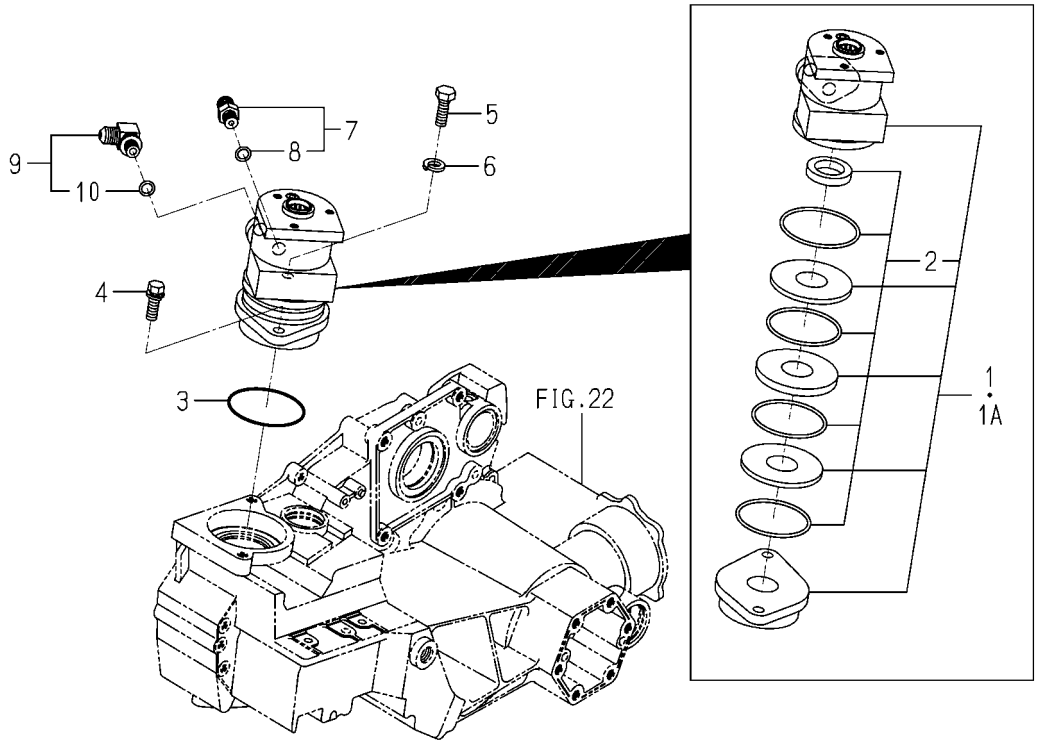

2213-440 -0100

KEY	PART CODE	DESCRIPTION	SPC	TYPE OF MODEL PZ80E16		ITC	COL	GRP	REMARKS
1	2204-440-300-00	GENERATOR,TORQUE	*	1 -102285					
1A	2204-440-300-10	TORQUEGENERATOR	*	1 102286-		1			
2	2204-440-310-00	KIT/SEAL ASSY	*	1 100001-					
3	2194-301-009-00	O-RING	*	1					
4	V211-261-003-00	BOLT(S) M10X30	*	1					
5	2204-440-001-00	BOLT/M10X30	*	1					
6	V401-160-012-00	WASHER,SP/M12	*	1					
7	1650-509-280-00	ADAPTER/PF1/4 ASSY	*	1					
8	V720-112-401-10	RING/O	*	1					
9	1656-509-310-10	ADAPTER/L/PF1/4 ASSY	*	1					
10	V720-112-401-10	RING/O	*	1					

FIG. 77 HOOD SYSTEM

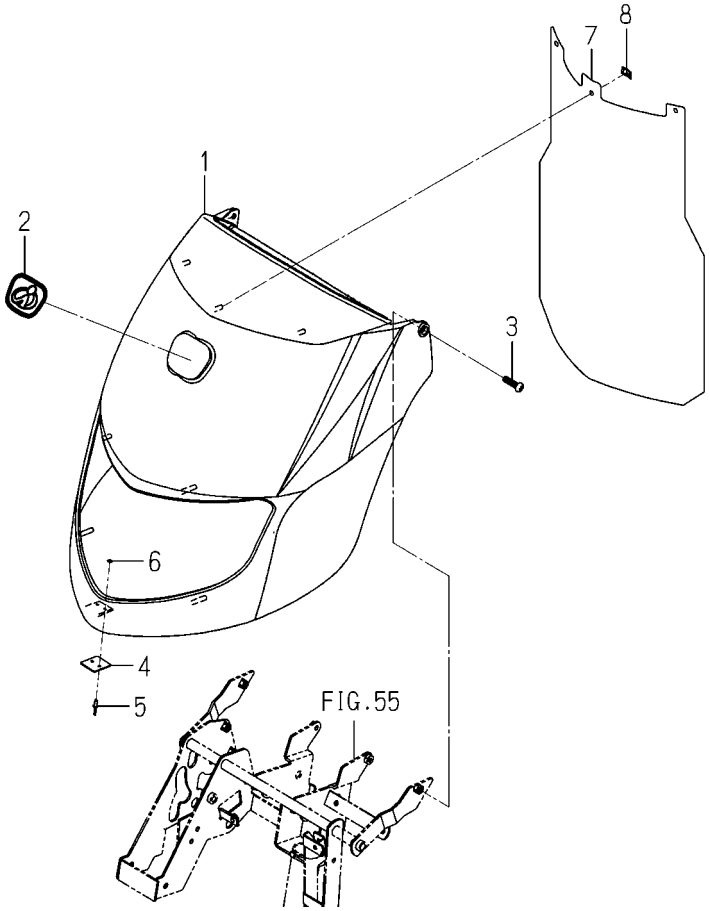

2204-501 -0100

KEY	PART CODE	DESCRIPTION	SPC	TYPE OF MODEL PZ80E16		ITC	COL	GRP	REMARKS
1	2204-501-200-00	HOOD	*	1					
2	3533-901-012-00	ORNAMENT/ISEKI	*	1					
3	3801-272-004-00	SCREW/8X25	*	2					
4	2204-501-006-10	PLATE/MAGNET	*	1					
5	W296-134-008-60	RIVET/BLIND/STEEL/4X	*	2					
6	V411-260-003-00	WASHER/M3	*	2					
7	2204-501-007-20	SHEET/METER PANEL	*	1					
8	V350-160-006-00	NUT,SPEED/P6	*	3					

FIG. 78 HOOD(REAR)SYSTEM

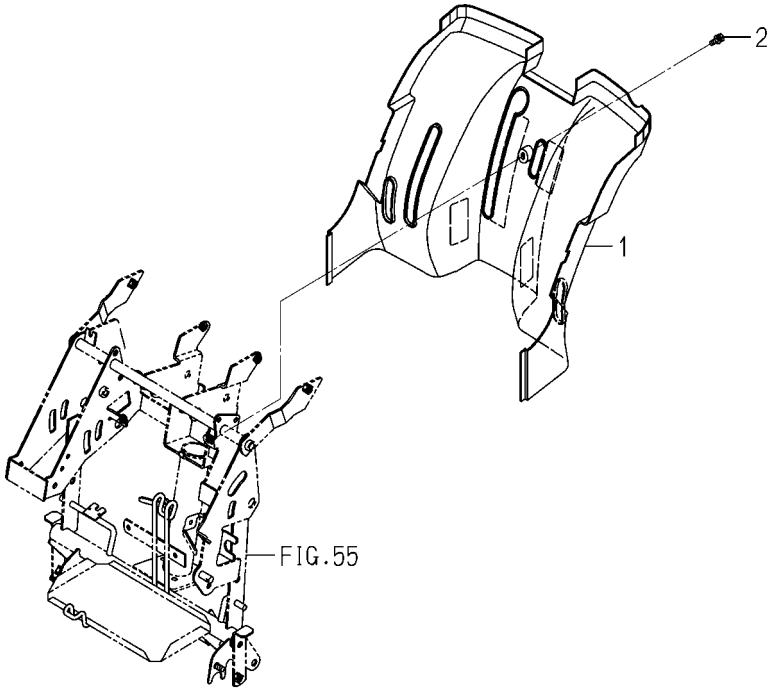

2213-507 -0100

KEY	PART CODE	DESCRIPTION	SPC	TYPE OF MODEL PZ80E16		ITC	COL	GRP	REMARKS
1	2213-507-001-00	HOOD/REAR/D	*	1					
2	V210-360-602-00	BOLT/SP	*	1					

FIG. 79 STEP(MAIN)SYSTEM(D TYPE EXCEPT F)

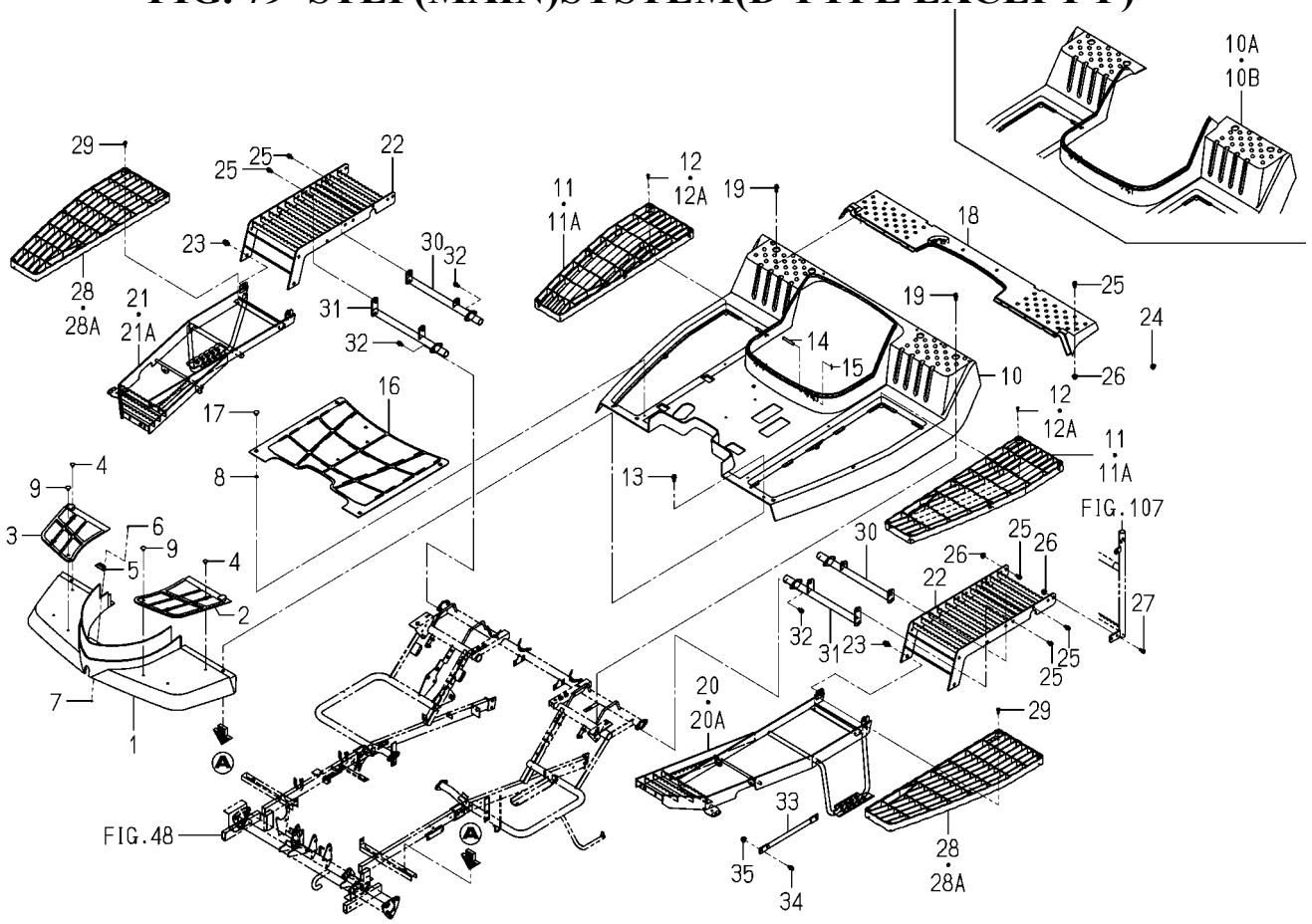

2213-508 -0100

KEY	PART CODE	DESCRIPTION	SPC	TYPE OF MODEL PZ80E16		ITC	COL	GRP	REMARKS
1	2204-508-001-00	STEP/FRONT/PZ	*	1					
2	2204-508-021-00	MATFRONT/LH/PZ	*	1					
3	2204-508-022-00	MATFRONT/RH/PZ	*	1					
4	1566-705-006-00	CAP/08	*	4 100001-					
5	2204-501-005-00	HOOD/MAGNET	*	1					
6	W296-133-208-00	RIVET/BLIND	*	2					
7	V411-260-003-00	WASHER/M3	*	2					
8	3207-301-016-00	PACKING,DRAIN PLUG	*	6 100001-					
9	2186-508-009-00	CLIP,STEP MAT	*	2 100001-					
10	2213-508-251-10	STEP/CENTER/PZ/D	*	1 -102147					
10A	2213-508-251-20	STEP/CENTER/PZ/8	*	1 -102399		1			
10B	2213-508-251-30	STEP/CENTER/PZ/8	*	1 102400-		1			
11	2204-508-003-00	STEP	*	2 -102156					
11A	2204-508-003-10	STEP/SEETHROUGH	*	2 102157-		1			
12	2204-508-005-00	SCREW/6	*	12 -102147					
12A	2213-508-004-00	TAPBOLT/6X20	*	12 102148-					
13	V211-360-802-50	BOLT/SP	*	4 100001-					
14	1329-106-002-00	PIN,STAND	*	2					
15	3908-170-020-00	PIN/SNAP/08	*	2 100001-					
16	2204-508-009-00	MATSTEP/PZ	*	1					
17	2186-508-009-00	CLIP,STEP MAT	*	8					
18	2213-508-005-00	STEP/REAR/8	*	1					
19	V211-360-802-50	BOLT/SP	*	4 100001-					
20	2213-508-300-60	STEP/SIDE/LH COMP	*	1 -101649			6G		
20A	2213-508-300-80	STEP/SIDE/LH COMP	*	1 101650-		1	6G		
21	2213-508-400-60	STEP/SIDE/RH COMP	*	1 -101649			6G		
21A	2213-508-400-80	STEP/SIDE/RH COMP	*	1 101650-		1	6G		
22	2213-508-330-30	STEP/SIDE/REAR COMP	*	2			6G		
23	V211-361-002-00	BOLT,SEMS	*	4					
24	V363-260-010-00	NUT/M10	*	4					

FIG. 79 STEP(MAIN)SYSTEM(D TYPE EXCEPT F)

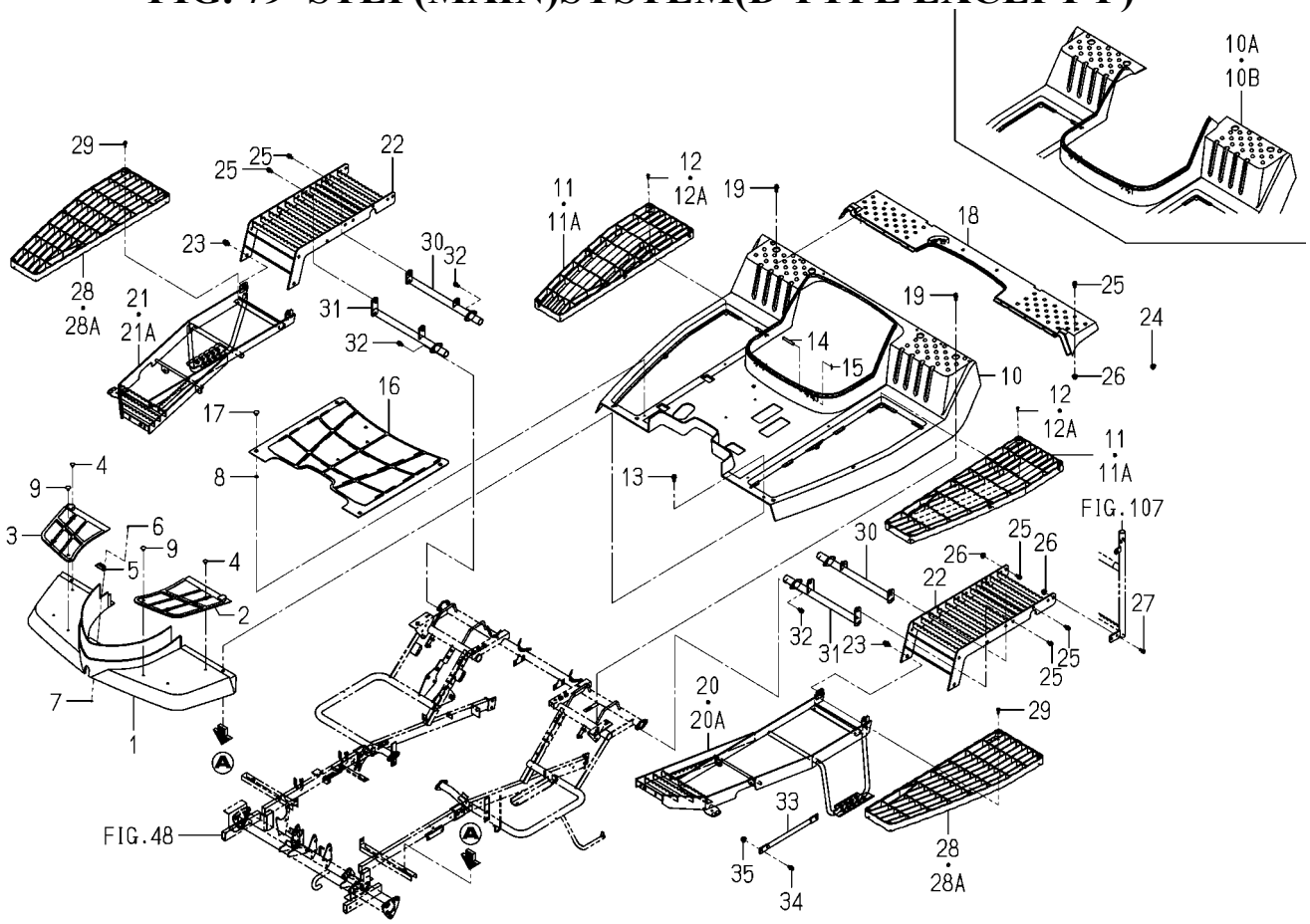

2213-508 -0100

KEY	PART CODE	DESCRIPTION	SPC	TYPE OF MODEL PZ80E16		ITC	COL	GRP	REMARKS
25	V211-360-802-00	BOLT/SP	*	12					
26	V362-260-008-00	NUT/WASHER	*	18					
27	V211-260-802-00	BOLT/S	*	4					
28	2204-508-003-00	STEP	*	2 -102156					
28A	2204-508-003-10	STEP/SEETHROUGH	*	2 102157-		1			
29	2213-508-004-00	TAPBOLT/6X20	*	8					
30	2213-508-610-10	STAY/STEP/REAR/ COMP	*	2					
31	2213-508-620-10	STAY/STEP/REAR COMP	*	2					
32	V211-360-802-00	BOLT/SP	*	8					
33	2213-508-009-00	STAY/SIDEFRAME	*	2					
34	V211-360-802-00	BOLT/SP	*	4					
35	V362-260-008-00	NUT/WASHER	*	4					

FIG. 80 STEP(MAIN)SYSTEM(G-F TYPE)

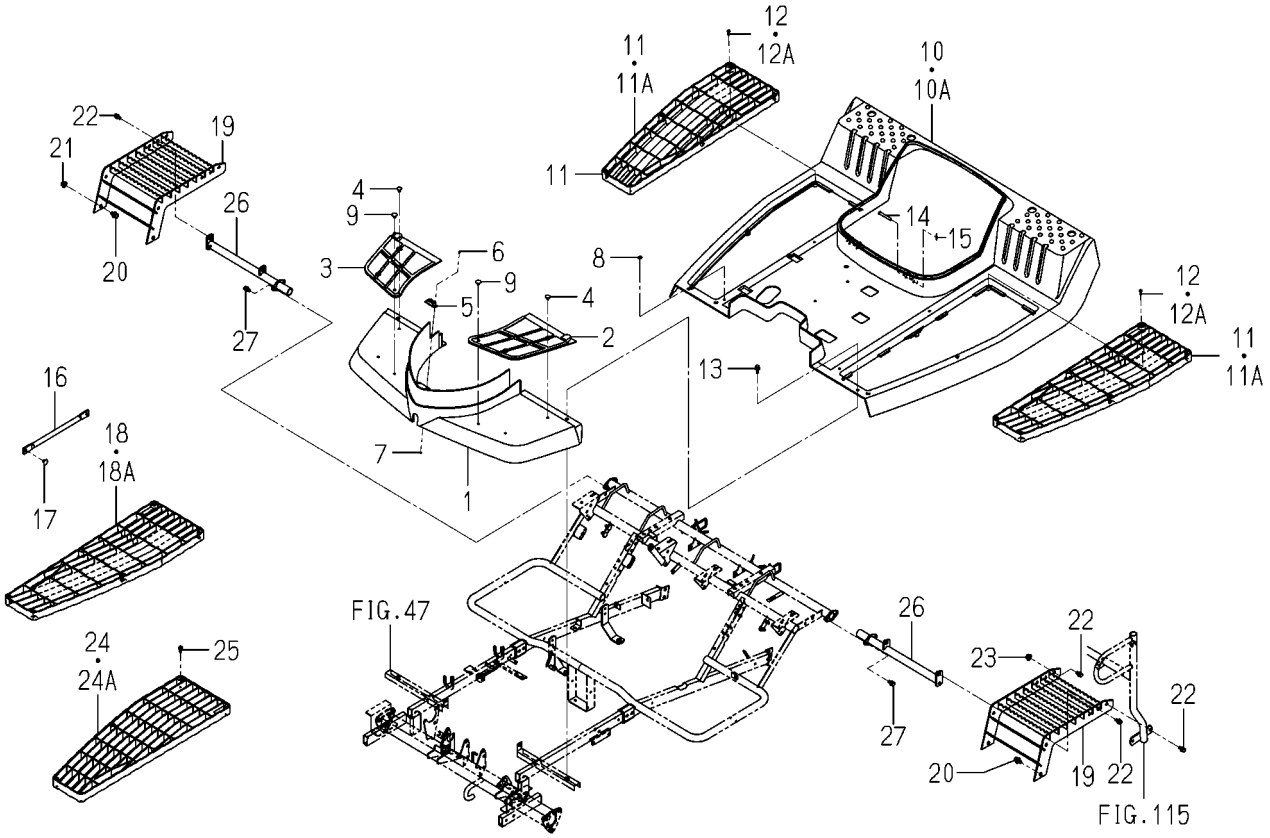

2213-508A-0100

KEY	PART CODE	DESCRIPTION	SPC	TYPE OF MODEL PZ80E16		ITC	COL	GRP	REMARKS
1	2204-508-001-00	STEP/FRONT/PZ	*	1					
2	2204-508-021-00	MATFRONT/LH/PZ	*	1					
3	2204-508-022-00	MATFRONT/RH/PZ	*	1					
4	1566-705-006-00	CAP/08	*	4 100001-					
5	2204-501-005-00	HOOD/MAGNET	*	1					
6	W296-133-208-00	RIVET/BLIND	*	2					
7	V411-260-003-00	WASHER/M3	*	2					
8	3207-301-016-00	PACKING,DRAIN PLUG	*	6 100001-					
9	2186-508-009-00	CLIP,STEP MAT	*	2 100001-					
10	2204-508-201-20	STETSP/CENTER/PZ	*	1 -102156					
10A	2204-508-201-30	STEP/CENTER/PZ	*	1 102157-		1			
11	2204-508-003-00	STEP	*	2 -102156					
11A	2204-508-003-10	STEP/SEETHROUGH	*	2 102157-		1			
12	2204-508-005-00	SCREW/6	*	12 -102147					
12A	2213-508-004-00	TAPBOLT/6X20	*	12 102148-					
13	V211-360-802-50	BOLT/SP	*	4 100001-					
14	1329-106-002-00	PIN,STAND	*	2					
15	3908-170-020-00	PIN/SNAP/08	*	2 100001-					
16	2213-508-006-00	STAY(SIDEFRAME)	*	2					
17	2186-508-009-00	CLIP,STEP MAT	*	8					
18	2204-508-003-00	STEP	*	2 -102156					
18A	2204-508-003-10	STEP/SEETHROUGH	*	2 102157-		1			
19	2213-508-320-30	STEP/SIDE/REAR/ COMP	*	2			6G		
20	V211-361-002-00	BOLT,SEMS	*	4					
21	V363-260-010-00	NUT/M10	*	4					
22	V211-360-802-00	BOLT/SP	*	16					
23	V362-260-008-00	NUT/WASHER	*	18					
24	2204-508-003-00	STEP	*	2 -102156					
24A	2204-508-003-10	STEP/SEETHROUGH	*	2 102157-		1			
25	2213-508-004-00	TAPBOLT/6X20	*	8					

FIG. 80 STEP(MAIN)SYSTEM(G-F TYPE)

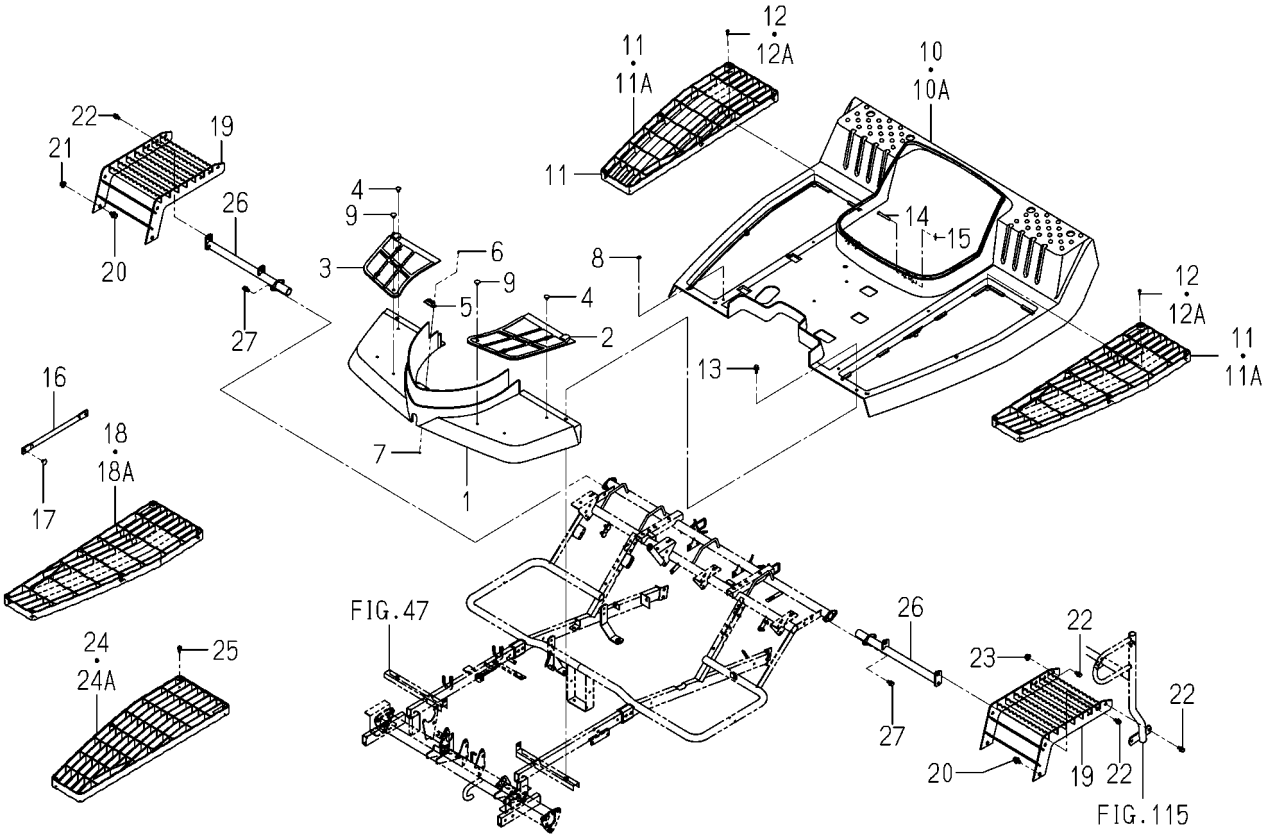

2213-508A-0100

KEY	PART CODE	DESCRIPTION	SPC	TYPE OF MODEL PZ80E16		ITC	COL	GRP	REMARKS
26	2213-508-610-10	STAY/STEP/REAR/ COMP	*	2					
27	V211-360-802-00	BOLT/SP	*	4					

FIG. 81 STEP(MAIN)SYSTEM(D-F TYPE)

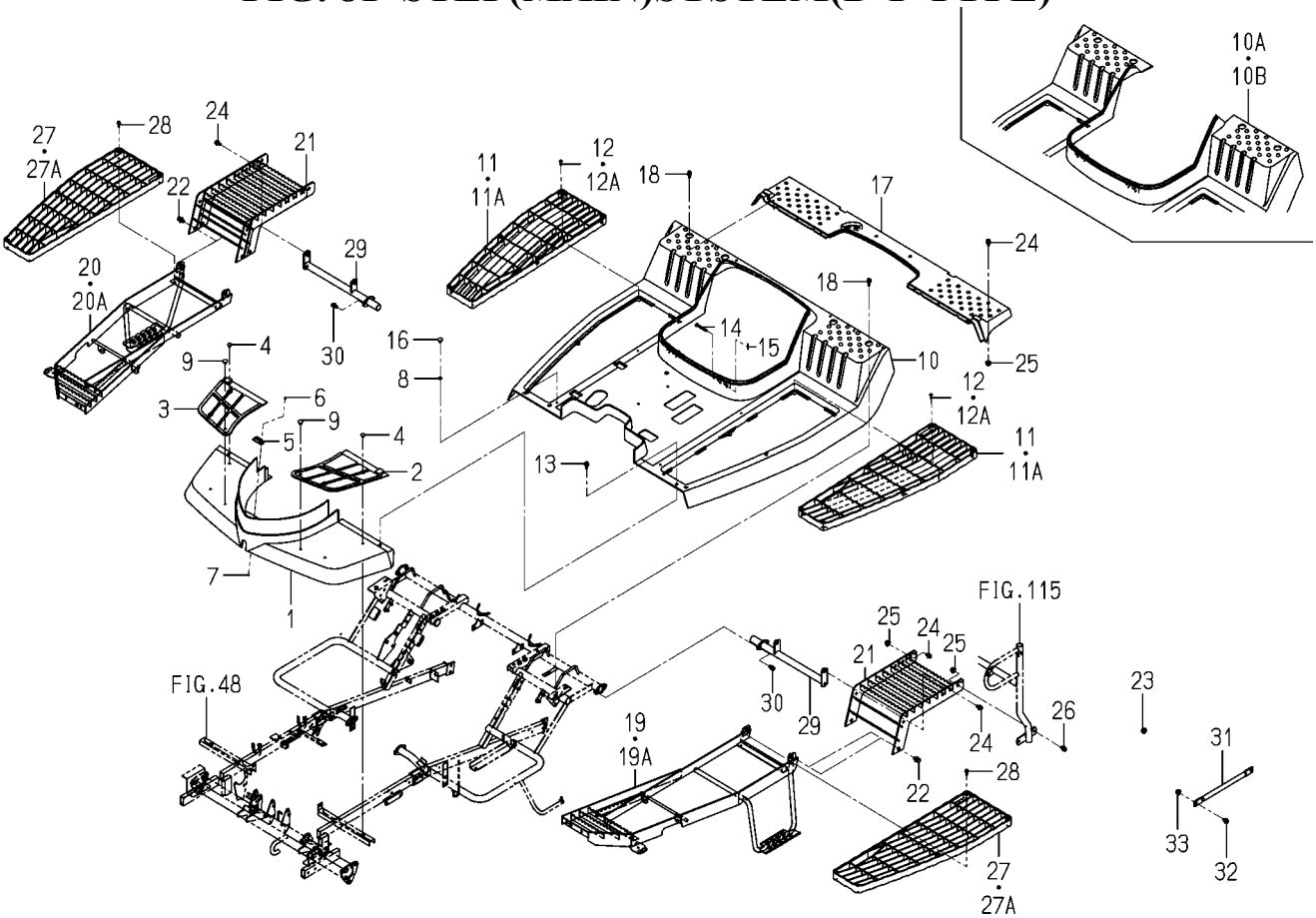

2213-508F-0100

KEY	PART CODE	DESCRIPTION	SPC	TYPE OF MODEL PZ80E16		ITC	COL	GRP	REMARKS
1	2204-508-001-00	STEP/FRONT/PZ	*	1					
2	2204-508-021-00	MATFRONT/LH/PZ	*	1					
3	2204-508-022-00	MATFRONT/RH/PZ	*	1					
4	1566-705-006-00	CAP/08	*	4 100001-					
5	2204-501-005-00	HOOD/MAGNET	*	1					
6	W296-133-208-00	RIVET/BLIND	*	2					
7	V411-260-003-00	WASHER/M3	*	2					
8	3207-301-016-00	PACKING,DRAIN PLUG	*	6 100001-					
9	2186-508-009-00	CLIP,STEP MAT	*	2 100001-					
10	2213-508-251-10	STEP/CENTER/PZ/D	*	1 -102147					
10A	2213-508-251-20	STEP/CENTER/PZ/8	*	1 -102399		1			
10B	2213-508-251-30	STEP/CENTER/PZ/8	*	1 102400-		1			
11	2204-508-003-00	STEP	*	2 -102156					
11A	2204-508-003-10	STEP/SEETHROUGH	*	2 102157-		1			
12	2204-508-005-00	SCREW/6	*	12 -102147					
12A	2213-508-004-00	TAPBOLT/6X20	*	12 102148-					
13	V211-360-802-50	BOLT/SP	*	4 100001-					
14	1329-106-002-00	PIN,STAND	*	2					
15	3908-170-020-00	PIN/SNAP/08	*	2 100001-					
16	2186-508-009-00	CLIP,STEP MAT	*	8					
17	2213-508-005-00	STEP/REAR/8	*	1					
18	V211-360-802-50	BOLT/SP	*	2 100001-					
19	2213-508-300-60	STEP/SIDE/LH COMP	*	1 -101649			6G		
19A	2213-508-300-80	STEP/SIDE/LH COMP	*	1 101650-		1	6G		
20	2213-508-400-60	STEP/SIDE/RH COMP	*	1 -101649			6G		
20A	2213-508-400-80	STEP/SIDE/RH COMP	*	1 101650-		1	6G		
21	2213-508-320-30	STEP/SIDE/REAR/ COMP	*	2			6G		
22	V211-361-002-00	BOLT,SEMS	*	4					
23	V363-260-010-00	NUT/M10	*	4					
24	V211-360-802-50	BOLT/SP	*	12					

FIG. 81 STEP(MAIN)SYSTEM(D-F TYPE)

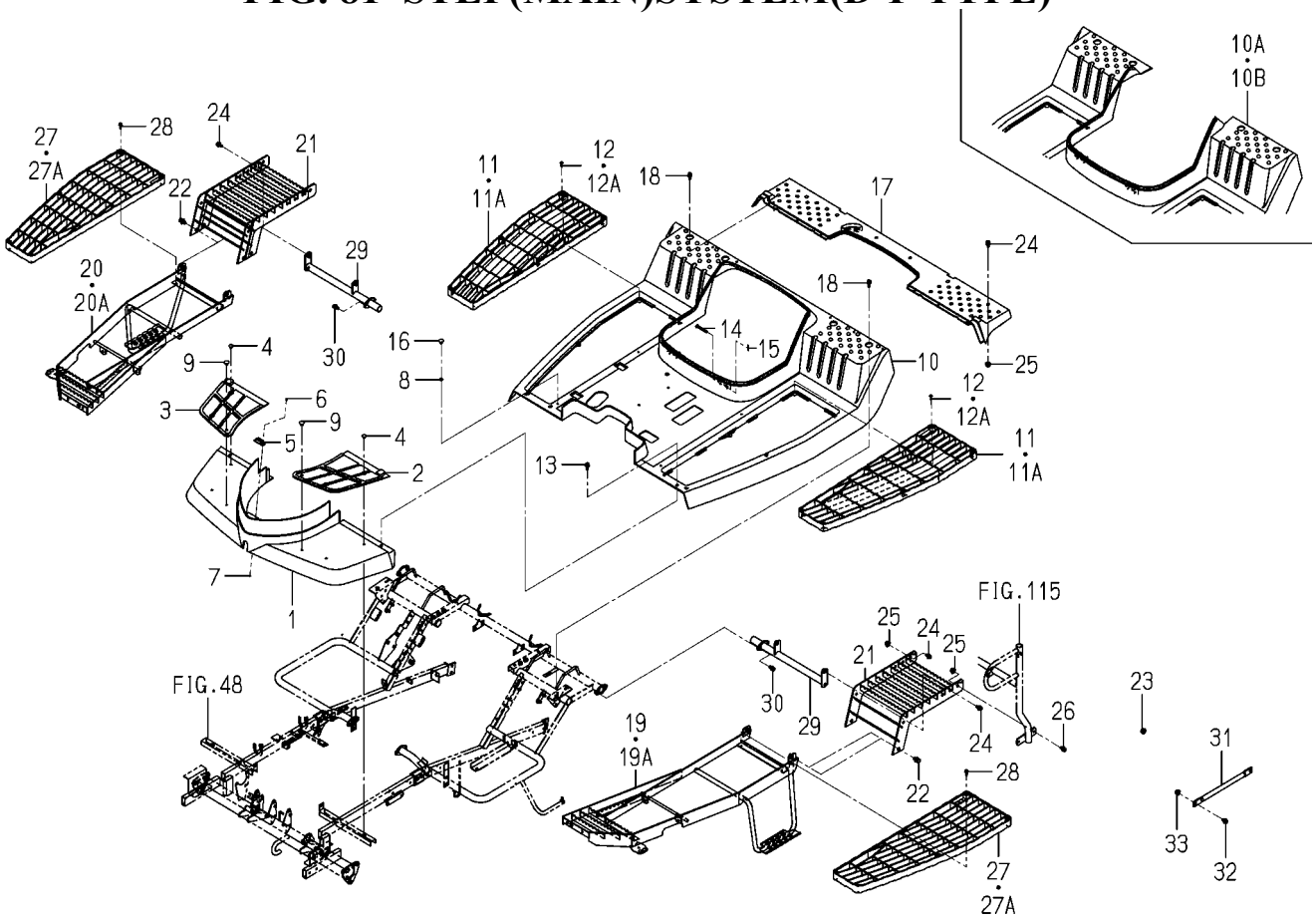

2213-508F-0100

KEY	PART CODE	DESCRIPTION	SPC	TYPE OF MODEL PZ80E16		ITC	COL	GRP	REMARKS
25	V362-260-008-00	NUT/WASHER	*	18					
26	V211-260-802-00	BOLT/S	*	4					
27	2204-508-003-00	STEP	*	2 -102156					
27A	2204-508-003-10	STEP/SEETHROUGH	*	2 102157-		1			
28	2213-508-004-00	TAPBOLT/6X20	*	8					
29	2213-508-620-10	STAY/STEP/REAR COMP	*	2					
30	V211-360-802-00	BOLT/SP	*	8					
31	2213-508-009-00	STAY/SIDEFRAME	*	2					
32	V211-360-802-00	BOLT/SP	*	4					
33	V362-260-008-00	NUT/WASHER	*	4					

FIG. 82 STEP(MAIN)SYSTEM(G TYPE EXCEPT F)

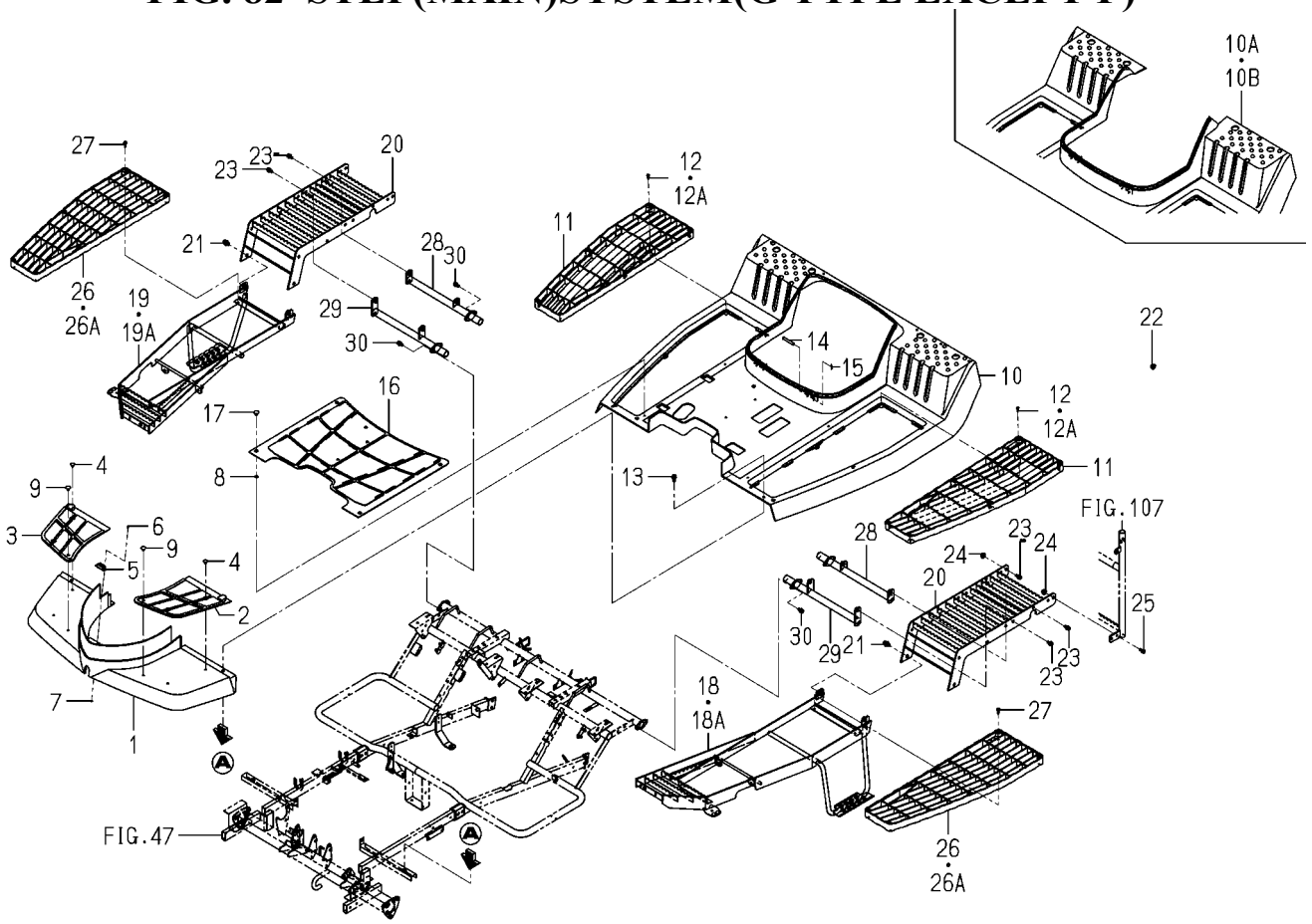

2213-508G-0100

KEY	PART CODE	DESCRIPTION	SPC	TYPE OF MODEL PZ80E16		ITC	COL	GRP	REMARKS
1	2204-508-001-00	STEP/FRONT/PZ	*	1					
2	2204-508-021-00	MATFRONT/LH/PZ	*	1					
3	2204-508-022-00	MATFRONT/RH/PZ	*	1					
4	1566-705-006-00	CAP/08	*	4 100001-					
5	2204-501-005-00	HOOD/MAGNET	*	1					
6	W296-133-208-00	RIVET/BLIND	*	2					
7	V411-260-003-00	WASHER/M3	*	2					
8	3207-301-016-00	PACKING,DRAIN PLUG	*	6 100001-					
9	2186-508-009-00	CLIP,STEP MAT	*	2 100001-					
10	2213-508-251-10	STEP/CENTER/PZ/D	*	1 -102147					
10A	2213-508-251-20	STEP/CENTER/PZ/8	*	1 -102399		1			
10B	2213-508-251-30	STEP/CENTER/PZ/8	*	1 102400-		1			
11	2204-508-003-10	STEP/SEETHROUGH	*	2 100001-					
12	2204-508-005-00	SCREW/6	*	12 -102147					
12A	2213-508-004-00	TAPBOLT/6X20	*	12 102148-					
13	V211-360-802-50	BOLT/SP	*	4 100001-					
14	1329-106-002-00	PIN,STAND	*	2					
15	3908-170-020-00	PIN/SNAP/08	*	2 100001-					
16	2204-508-009-00	MATSTEP/PZ	*	1					
17	2186-508-009-00	CLIP,STEP MAT	*	8					
18	2213-508-300-60	STEP/SIDE/LH COMP	*	1 -101649			6G		
18A	2213-508-300-80	STEP/SIDE/LH COMP	*	1 101650-		1	6G		
19	2213-508-400-60	STEP/SIDE/RH COMP	*	1 -101649			6G		
19A	2213-508-400-80	STEP/SIDE/RH COMP	*	1 101650-		1	6G		
20	2213-508-330-30	STEP/SIDE/REAR COMP	*	2			6G		
21	V211-361-002-00	BOLT,SEMS	*	4					
22	V363-260-010-00	NUT/M10	*	4					
23	V211-360-802-50	BOLT/SP	*	12					
24	V362-260-008-00	NUT/WASHER	*	18					
25	V211-260-802-00	BOLT/S	*	4					

FIG. 82 STEP(MAIN)SYSTEM(G TYPE EXCEPT F)

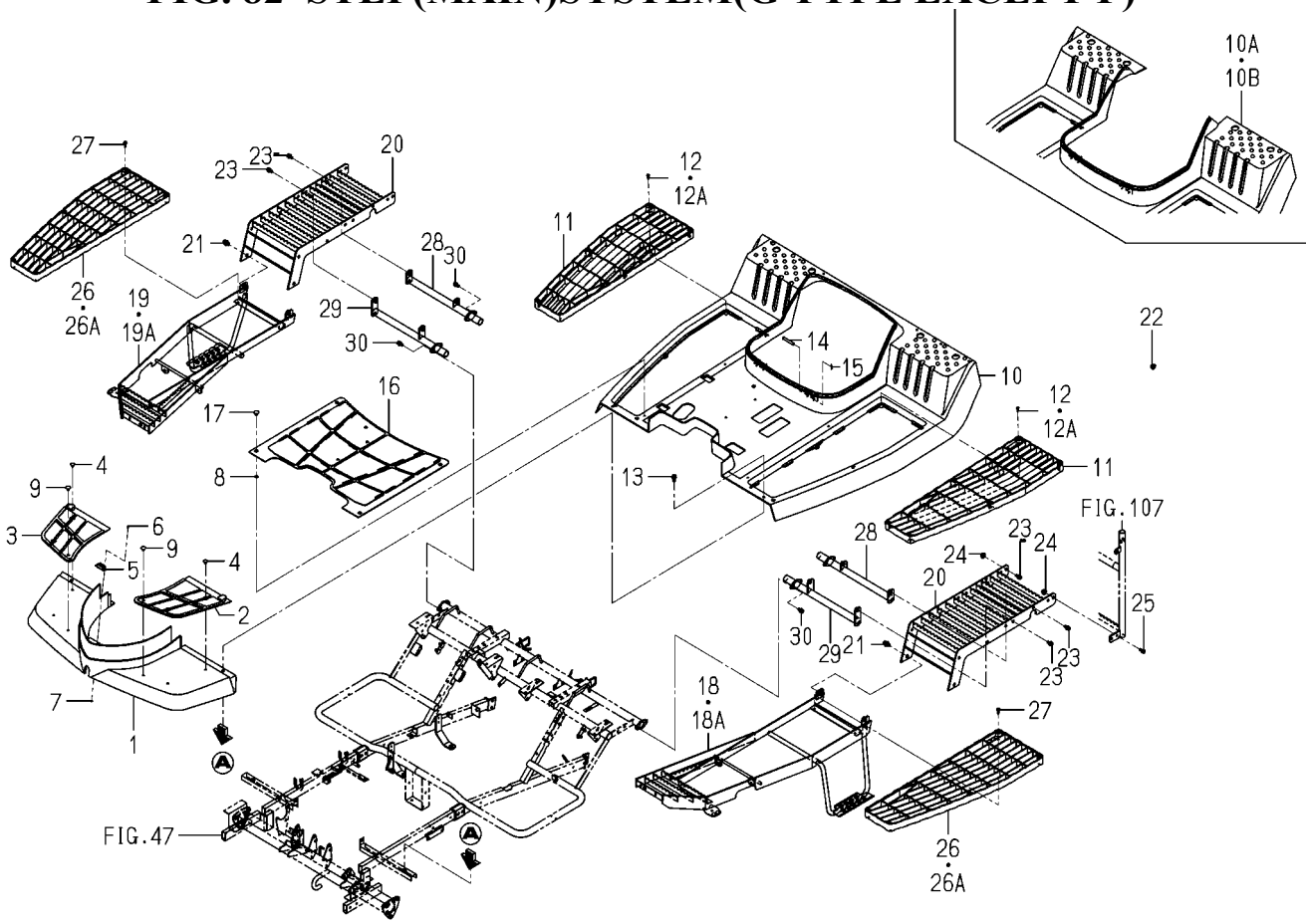

2213-508G-0100

KEY	PART CODE	DESCRIPTION	SPC	TYPE OF MODEL PZ80E16		ITC	COL	GRP	REMARKS
26	2204-508-003-00	STEP	*	2 -102156					
26A	2204-508-003-10	STEP/SEETHROUGH	*	2 102157-		1			
27	2213-508-004-00	TAPBOLT/6X20	*	8					
28	2213-508-610-10	STAY/STEP/REAR/ COMP	*	2					
29	2213-508-620-10	STAY/STEP/REAR COMP	*	2					
30	V211-360-802-00	BOLT/SP	*	8					

FIG. 83 STEP(REAR)SYSTEM(D TYPE EXCEPT F)

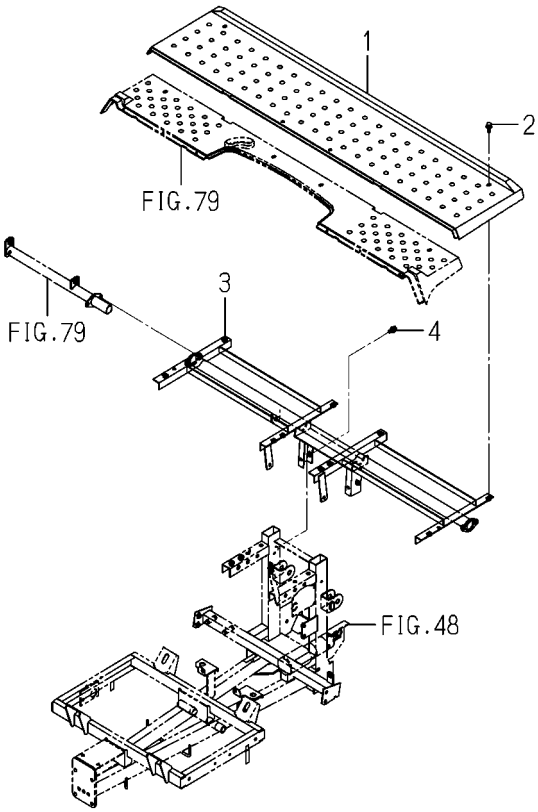

2213-510E-0100

KEY	PART CODE	DESCRIPTION	SPC	TYPE OF MODEL PZ80E16		ITC	COL	GRP	REMARKS
1	2213-510-008-00	STEP/REAR/8	*	1					
2	V211-360-802-50	BOLT/SP	*	4					
3	2213-510-310-20	FRAME/REAR/8 ASSY	*	100001- 1					
4	V211-360-802-00	BOLT/SP	*	4					

FIG. 84 STEP(REAR)SYSTEM(G-F TYPE)

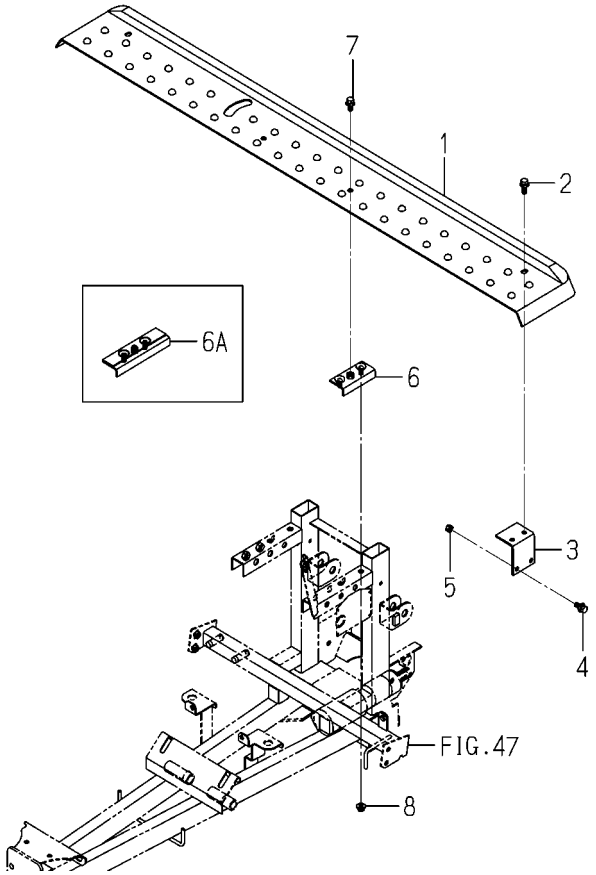

2213-510F-0100

KEY	PART CODE	DESCRIPTION	SPC	TYPE OF MODEL PZ80E16		ITC	COL	GRP	REMARKS
1	2213-510-002-00	STEP/REAR/8/E	*	1					
2	V211-360-802-50	BOLT/SP	*	4 100001-					
3	2213-510-230-10	PLATE/L/68X47 COMP	*	2					
4	V211-360-802-00	BOLT/SP	*	4					
5	V360-260-006-00	NUT/M6	*	4					
6	2213-510-220-00	PLATE/L/15X36 COMP	*	2 -101268					
6A	2213-510-220-10	PLATE/L/15X36 COMP	*	2 101269-		1			
7	V211-360-802-00	BOLT/SP	*	2					
8	V362-260-008-00	NUT/WASHER	*	2					

FIG. 85 STEP(REAR)SYSTEM(G TYPE EXCEPT F)

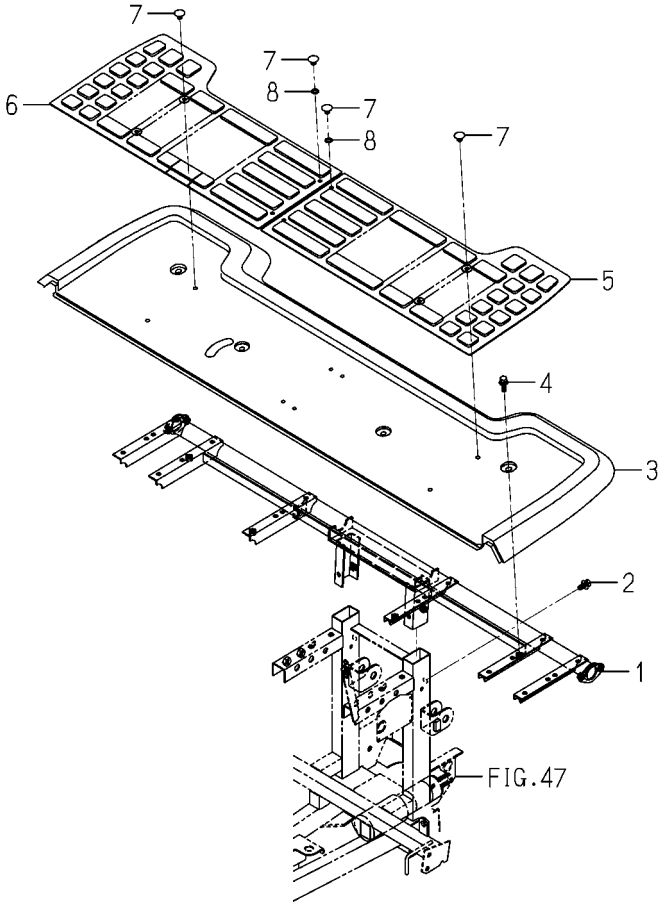

2213-510G-0100

KEY	PART CODE	DESCRIPTION	SPC	TYPE OF MODEL PZ80E16		ITC	COL	GRP	REMARKS
1	2213-510-400-10	FRAME/REAR/8G COMP	*	1					
2	V211-360-802-00	BOLT/SP	*	2 100001-					
3	2213-510-004-00	STEP/REAR/8G	*	1					
4	V211-360-802-50	BOLT/SP	*	4 100001-					
5	2204-510-005-00	MATSTEP/REAR/LH	*	1					
6	2213-510-005-00	MATSTEP/REAR/RH	*	1					
7	2186-508-009-00	CLIP,STEP MAT	*	8					
8	3207-301-016-00	PACKING,DRAIN PLUG	*	4					

FIG. 86 COVER(ENGINE)SYSTEM(D TYPE)

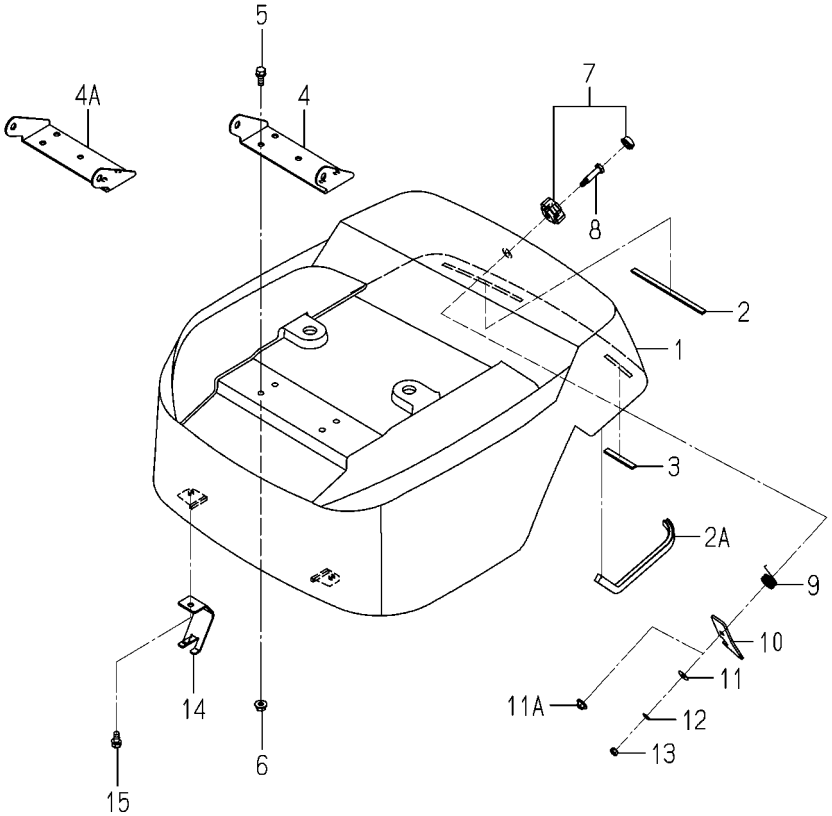

2213-512D-0100

KEY	PART CODE	DESCRIPTION	SPC	TYPE OF MODEL PZ80E16		ITC	COL	GRP	REMARKS
1	2213-512-006-00	COVER/ENGINE/D	*	1					
2	2213-512-011-00	CUSHION/08X150X03	*	1 -102350					
2A	2213-512-016-00	PROTECTOR/260	*	2 102351-					
3	2213-512-012-00	CUSHION/08X60X03	*	1 -102350					
4	2213-512-003-00	BRACKET/SEAT/PZ/8	*	1 -102264					
4A	2213-512-003-10	BRACKET/SEAT/PZ/8	*	1 102265-		3			
5	V211-260-802-00	BOLT/S	*	4 100001-					
6	V362-260-008-00	NUT/WASHER	*	4					
7	2194-508-220-10	KNOB SET	*	1 100001-					
8	2194-508-008-00	PIN	*	1					
9	2194-508-009-00	SPRING/HT020	*	1					
10	2213-512-009-00	PLATE/LOCK8	*	1					
11	3560-503-302-00	WASHER,WIRE TENSION	*	1 -101649					
11A	V361-260-006-00	NUT	*	1 101650-					
12	V401-160-006-00	WASHER,SP/M 6	*	1 -101649					
13	V301-260-006-00	NUT/M6	*	1 -101649					
14	2204-512-003-10	STAY/HINGE/PZ	*	2					
15	V211-260-801-60	BOLT,SEMS (S) M8X16	*	2 100001-					

FIG. 87 COVER(ENGINE)SYSTEM(G TYPE)

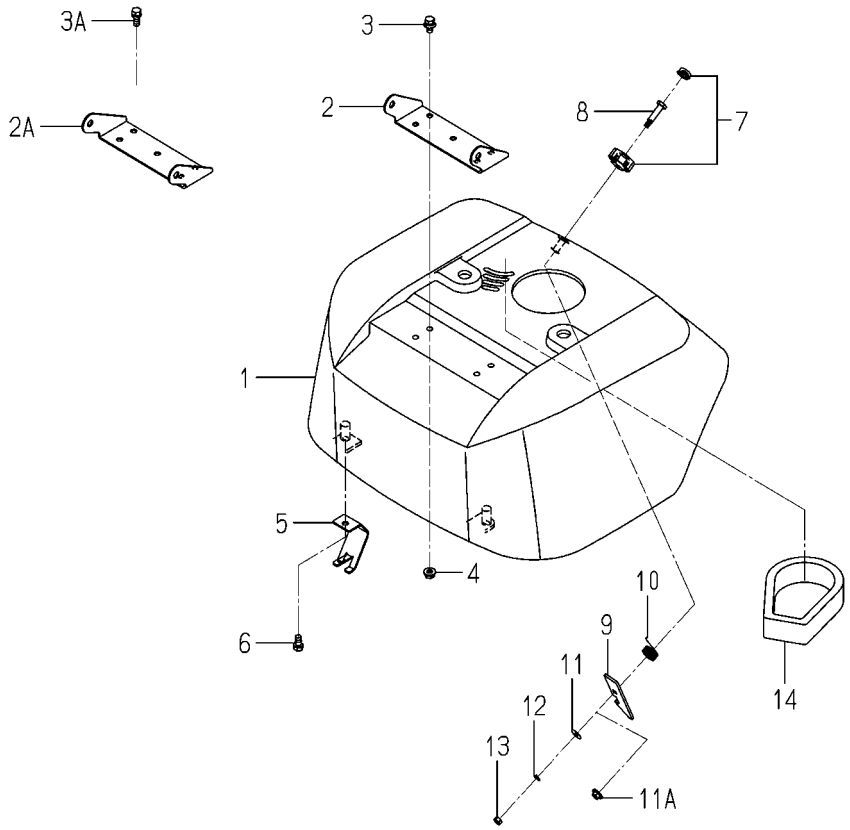

2204-512H-0100

KEY	PART CODE	DESCRIPTION	SPC	TYPE OF MODEL PZ80E16		ITC	COL	GRP	REMARKS
1	2204-512-005-00	COVER/ENGINE	*	1					
2	2213-512-003-00	BRACKET/SEAT/PZ/8	*	1 -102264					
2A	2213-512-003-10	BRACKET/SEAT/PZ/8	*	1 102265-		3			
3	V211-360-801-60	BOLT,SEMS (SP)	*	4 -101649					
3A	V211-260-802-00	BOLT/S	*	4 101650-					
4	V362-260-008-00	NUT/WASHER	*	4					
5	2204-512-003-10	STAY/HINGE/PZ	*	2					
6	V211-260-801-60	BOLT,SEMS (S) M8X16	*	2 100001-					
7	2194-508-220-10	KNOB SET	*	1 100001-					
8	2194-508-008-00	PIN	*	1					
9	2194-508-005-00	PLATE/COVER/LOCK	*	1					
10	2194-508-009-00	SPRING/HT020	*	1					
11	3560-503-302-00	WASHER,WIRE TENSION	*	1 -101649					
11A	V361-260-006-00	NUT	*	1 101650-					
12	V401-160-006-00	WASHER,SP/M 6	*	1 -101649					
13	V301-260-006-00	NUT/M6	*	1 -101649					
14	2204-512-009-00	COVER/AIRCLEANER/G	*	1					

FIG. 88 TRAY(SEEDLING/SUB)SYSTEM

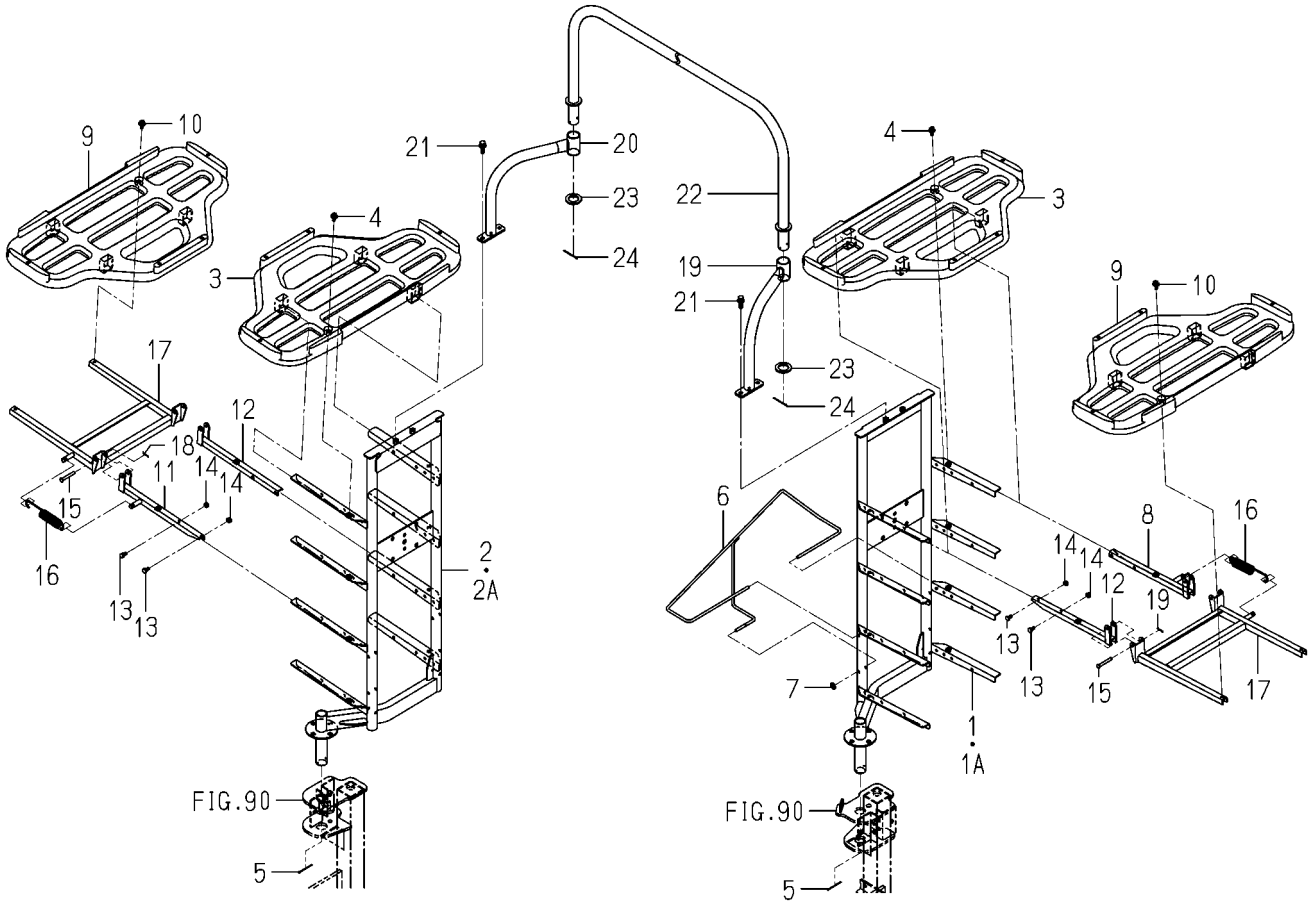

2213-513K-0100

KEY	PART CODE	DESCRIPTION	SPC	TYPE OF MODEL PZ80E16		ITC	COL	GRP	REMARKS
1	2213-513-520-00	SEEDLING FRAME/4/LH/	*	1 -101744			8E		
1A	2213-513-520-10	SEEDLING FRAME/4/LH/	*	1 101745-		1	8E		
2	2213-513-530-00	SEEDLING FRAME/4/RH/	*	1 -101744			8E		
2A	2213-513-530-10	SEEDLING FRAME/4/RH/	*	1 101745-		1	8E		
3	2161-513-051-10	FRAME,SEEDLING	*	8					
4	2144-501-011-10	BOLT/M6X16X16	*	8					
5	V500-163-004-00	PIN,SPLIT/3 X40	*	2					
6	2186-513-440-00	HOOK	*	1					
7	2163-526-006-00	NUT	*	1					
8	2213-586-200-00	STAY/FRAME SUPPORT/C	*	2			8E		
9	2161-513-051-10	FRAME,SEEDLING	*	8					
10	2144-501-011-10	BOLT/M6X16X16	*	8					
11	2145-586-200-11	STAY,FRAME SUPPORT	*	6			8E		
12	2145-586-210-11	STAY,FRAME SUPPORT	*	8			8E		
13	V210-260-601-20	BOLT/S	*	32					
14	V301-260-006-00	NUT/M6	*	32					
15	2144-805-056-00	PIN/06X41	*	16					
16	1575-123-002-00	SPRING/HE130	*	8					
17	2145-586-220-01	STAY,FRAME SUPPORT/O	*	8			8E		
18	2130-601-018-00	PIN,SNAP/6	*	16					
19	2213-513-660-00	STAY/UPPER/LH COMP	*	1			6G		
20	2213-513-670-00	STAY/UPPER/RH COMP	*	1			6G		
21	V211-360-802-50	BOLT/SP	*	4					
22	2213-513-610-00	TUBE/UPPER/8A COMP	*	1					
23	2213-513-020-00	WASHER/26X40X03	*	2					
24	V500-163-004-00	PIN,SPLIT/3 X40	*	2					

FIG. 89 MIRROR SYSTEM

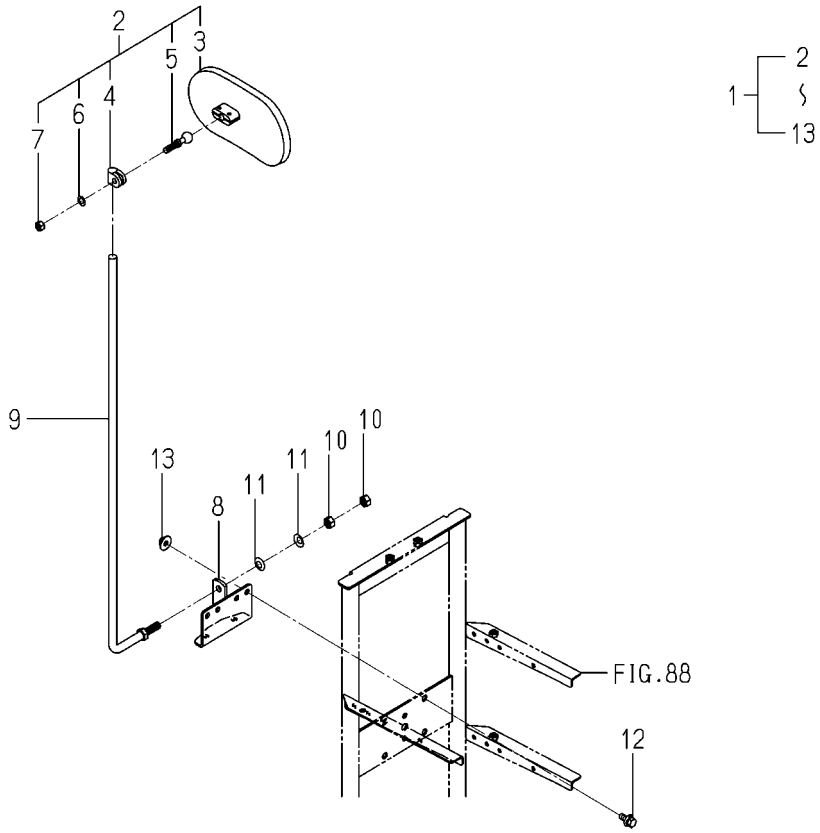

2161-513P-0100

KEY	PART CODE	DESCRIPTION	SPC	TYPE OF MODEL PZ80E16		ITC	COL	GRP	REMARKS
1	2161-513-850-10	BACKMIRROR SET	*	1					
2	1600-619-210-10	MIRROR ASSY	*	1					
3	1541-621-210-00	MIRROR ASSY	*	1					
4	1600-619-211-00	STAY	*	1					
5	1600-619-212-00	PIVOT	*	1					
6	1600-619-213-00	WASHER/LOCK	*	1					
7	1600-619-214-00	NUT	*	1					
8	2161-513-810-00	PLATE/MIRROR	*	1					
9	2161-513-820-10	STAY/MIRROR COMP	*	1					
10	V304-260-010-00	NUT	*	2					
11	2130-713-003-00	FLAT SPRING	*	2					
12	V211-360-802-00	BOLT/SP	*	2					
13	V363-260-008-00	NUT/WASHER	*	2					

FIG. 90 STAY(FRAME/SEEDLING/SUB)SYSTEM

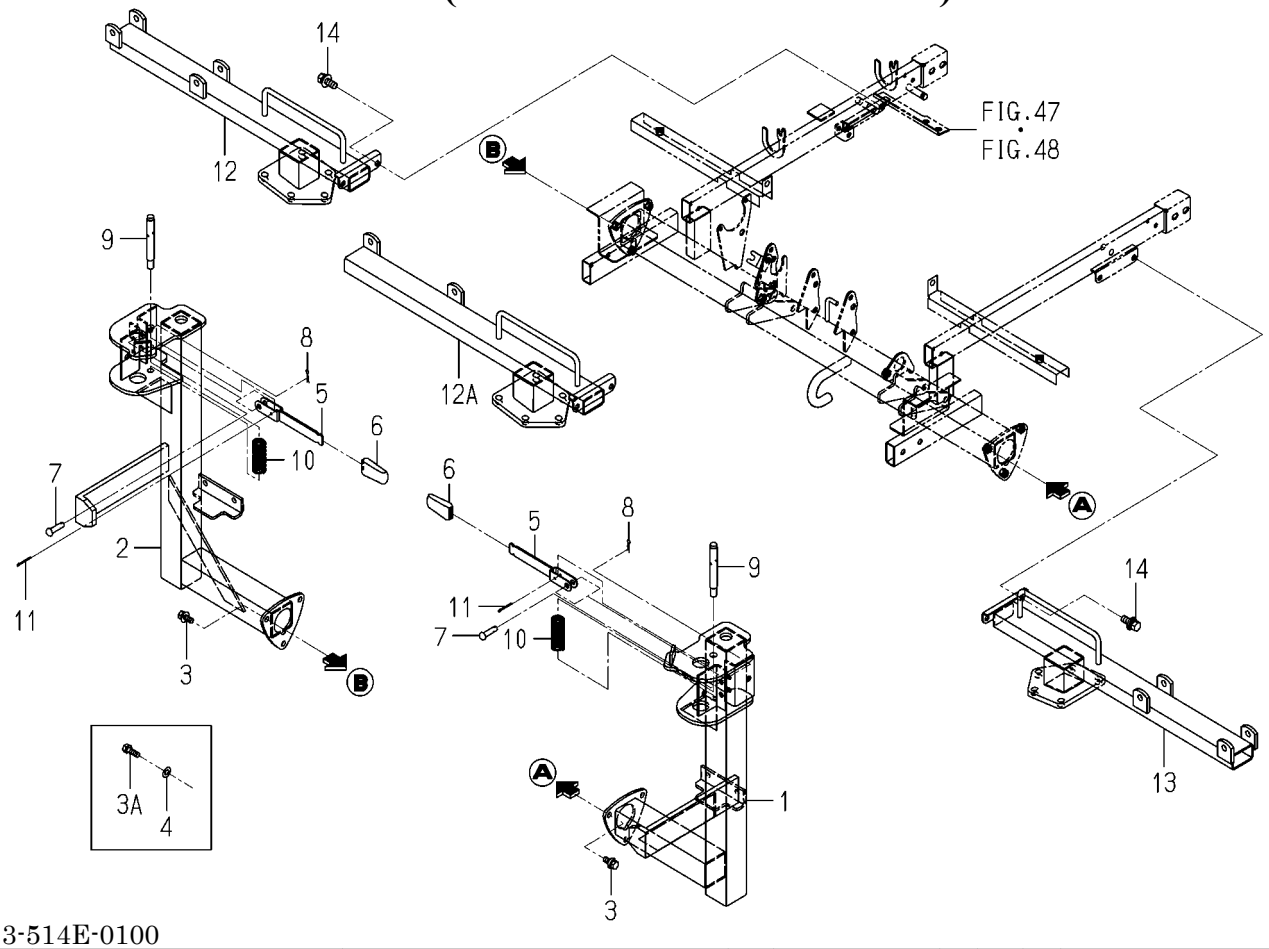

2213-514E-0100

KEY	PART CODE	DESCRIPTION	SPC	TYPE OF MODEL PZ80E16		ITC	COL	GRP	REMARKS
1	2213-514-520-10	STAY/SEEDLING/8E/LH	*	1			8E		
2	2213-514-530-10	STAY/SEEDLING/8E/RH	*	1			8E		
3	V211-360-802-00	BOLT/SP	*	6 -101046					
3A	V211-560-802-50	BOLT,SEMS/M8X25 7T	*	6 101047-					
4	V411-260-008-00	WASHER,PL/M 8	*	6 101047-					
5	2204-514-210-00	LEVER	*	2					
6	2145-751-004-00	GRIP	*	2					
7	1404-312-006-00	PIN,YOKE A	*	2					
8	3908-170-020-00	PIN/SNAP/08	*	2					
9	2204-514-003-00	PIN/12X100	*	2					
10	2798-102-002-00	SPRING	*	2					
11	V500-163-002-50	PIN,SPLIT/3 X25	*	2					
12	2213-514-200-30	STAY/SIDESTEP COMP	*	2 -102349			8E		
12A	2213-514-200-40	STAY/SIDESTEP COMP	*	1 102350-			8E		
13	2213-514-290-01	STAY/SIDESTEP/RHCOMP	*	1 102350-			8E		
14	V211-261-002-50	BOLT(S) M10X25	*	10					

FIG. 91 SEAT SYSTEM

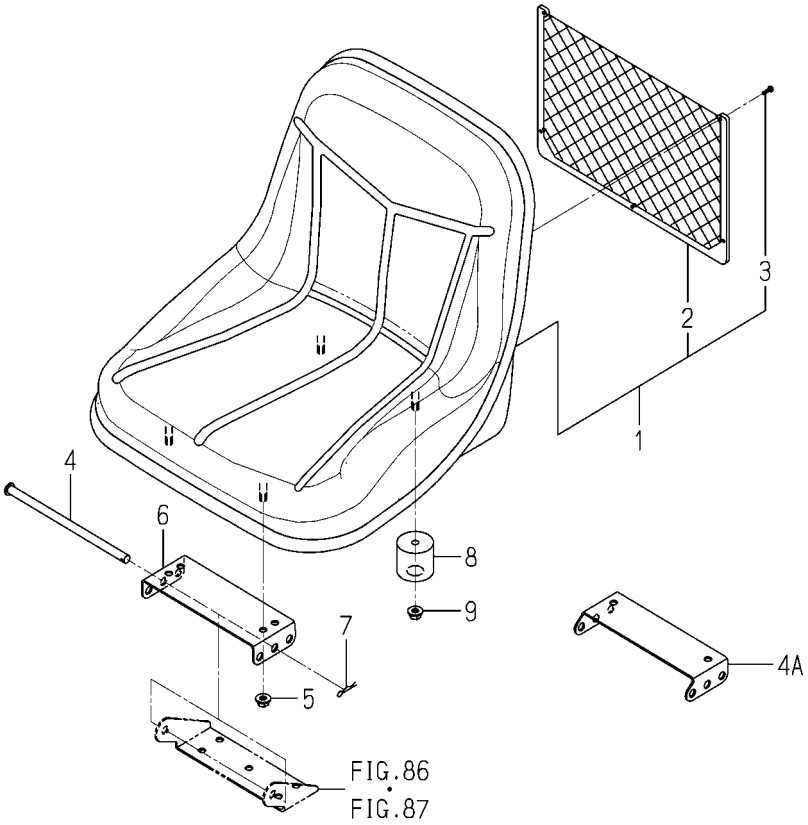

2213-517 -0100

KEY	PART CODE	DESCRIPTION	SPC	TYPE OF MODEL PZ80E16		ITC	COL	GRP	REMARKS
1	2213-517-200-00	SEAT/PZ ASSY	*	1					
2	2213-517-201-00	NETPOCKET	*	1 100001-					
3	V195-164-012-10	SCREW/TAPPING	*	5 100001-					
4	2213-517-003-00	PLATE/SEAT/PZ	*	1 -102264					
4A	2213-517-003-10	PLATE/SEAT/PZ/8	*	1 102265-		3			
5	V362-260-008-00	NUT/WASHER	*	2					
6	1488-611-003-10	PIN,SEAT SET	*	1					
7	3505-704-003-00	PIN,HAIR (10)	*	1					
8	2213-517-002-00	CUSHION/SEAT/PZ	*	2					
9	V362-260-008-00	NUT/WASHER	*	2					

FIG. 92 MARKER(CENTER)SYSTEM

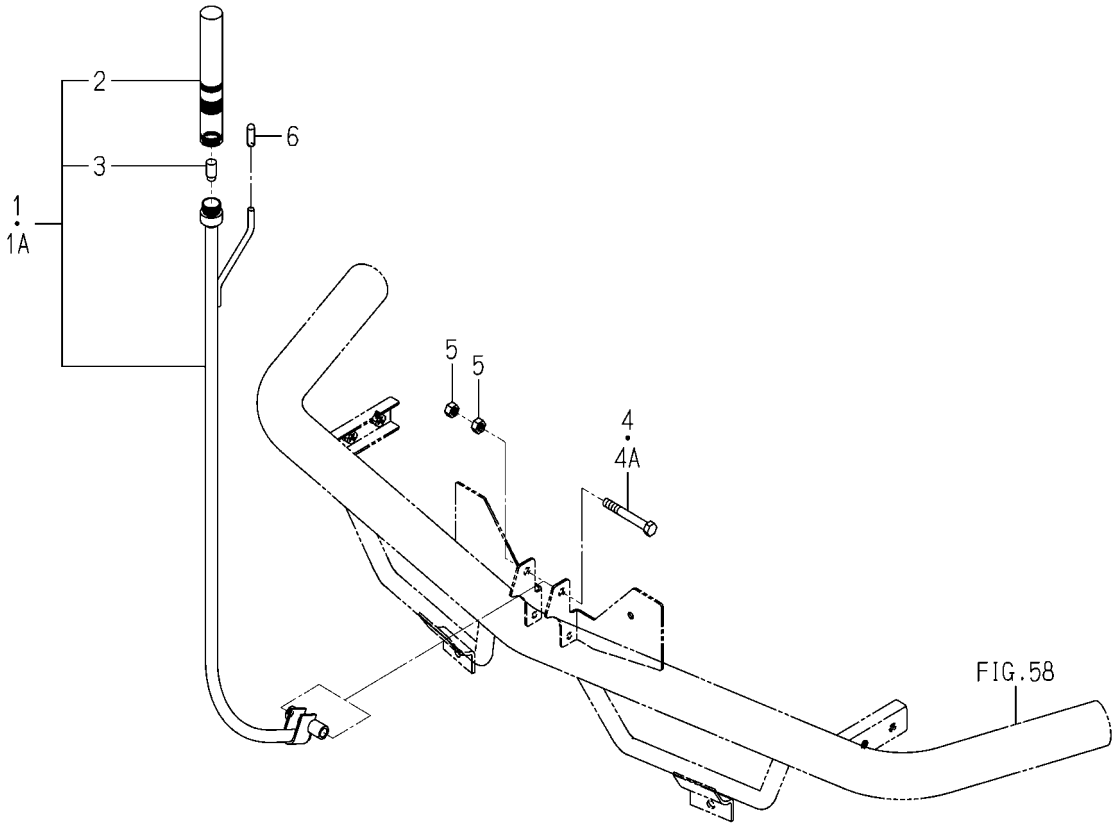

2204-524 -0100

KEY	PART CODE	DESCRIPTION	SPC	TYPE OF MODEL PZ80E16		ITC	COL	GRP	REMARKS
1	2204-524-200-00	MASCOT,LAMP	*	1 -101649					
1A	2204-524-300-00	LAMP/MASCOT ASSY	*	1 101650-					
2	2175-524-201-00	MASCOT, CENTER	*	1 -101649					
3	2132-524-204-10	BULB/12V8W	*	1 -101649					
4	V201-260-806-00	BOLT/M 8X60	*	1 -102041					
4A	V201-260-806-50	BOLT/M 8X65	*	1 102042-					
5	V304-260-008-00	NUT	*	2					
6	4512-106-005-00	CAP/D6/YELLOW	*	1					

FIG. 93 MARKER(SIDE)SYSTEM

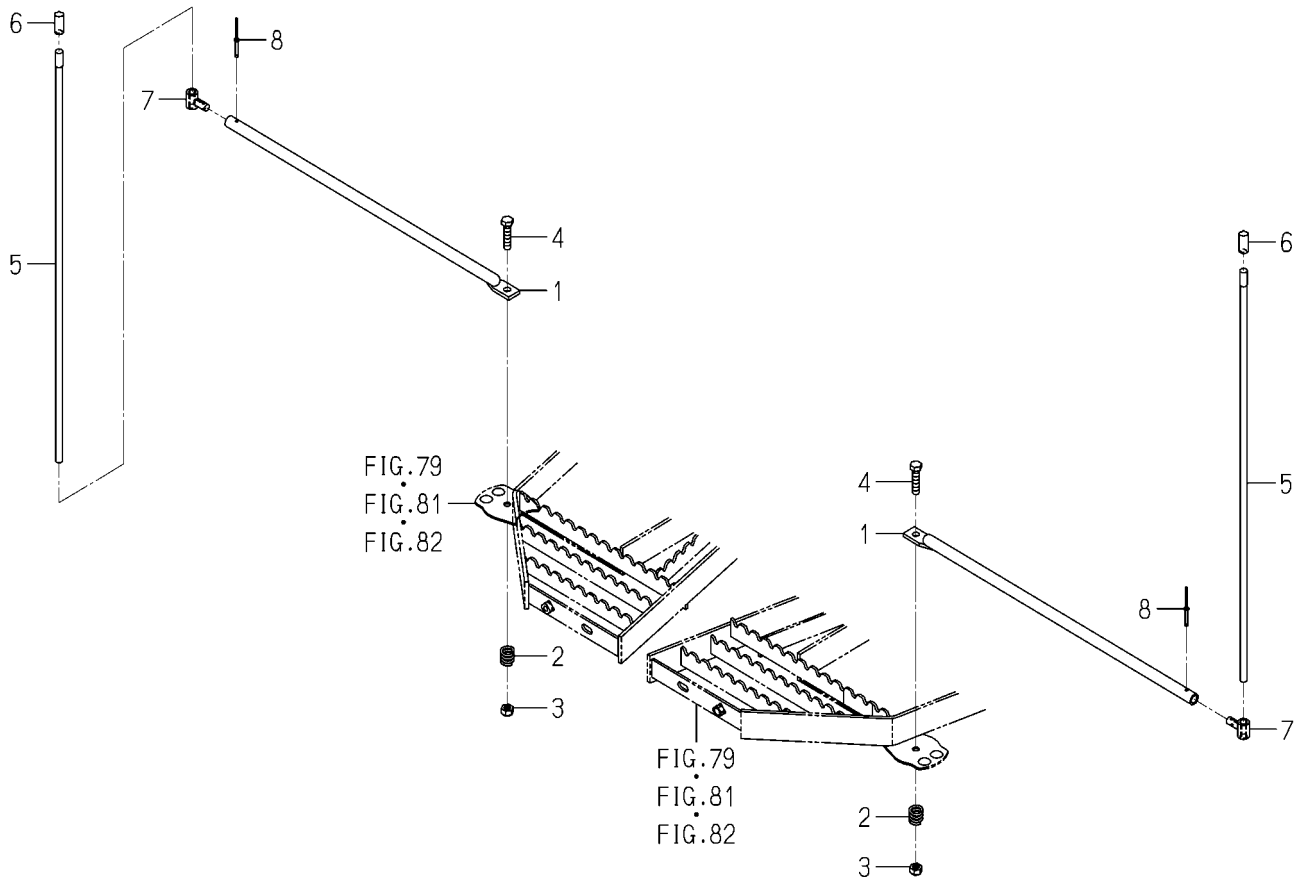

2213-528 -0100

KEY	PART CODE	DESCRIPTION	SPC	TYPE OF MODEL PZ80E16		ITC	COL	GRP	REMARKS
1	2213-528-003-00	MARKER/SIDE/8	*	2			8E		
2	2172-124-004-00	SPRING	*	2					
3	2144-117-002-00	NUT/M8	*	2					
4	V201-260-803-50	BOLT/M 8X35	*	2					
5	2161-528-001-00	MARKER(M)	*	2					
6	2186-528-007-00	CAP	*	2					
7	2175-528-008-20	BOSS,EXTENSION MARKE	*	2					
8	2186-528-244-00	RIVET	*	2					

FIG. 94 SWITCH(BACK LIFT)SYSTEM

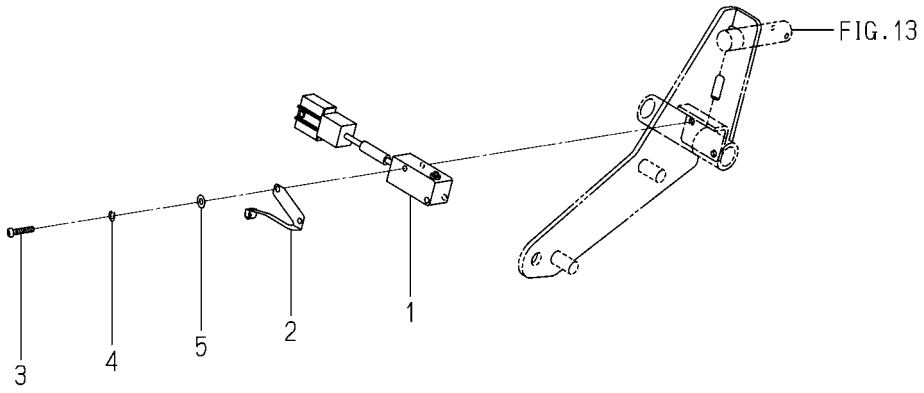

2204-531 -0100

KEY	PART CODE	DESCRIPTION	SPC	TYPE OF MODEL PZ80E16		ITC	COL	GRP	REMARKS
1	3807-836-350-00	SWITCH ASSY	*	1					
2	3807-836-400-00	ACTUATOR ASSY	*	1					
3	V111-163-001-60	SCREW/M3X16	*	2					
4	V401-160-003-00	WASHER,SP/M 3	*	2					
5	V411-260-003-00	WASHER/M3	*	2					

FIG. 95 LAMP(HEAD)SYSTEM

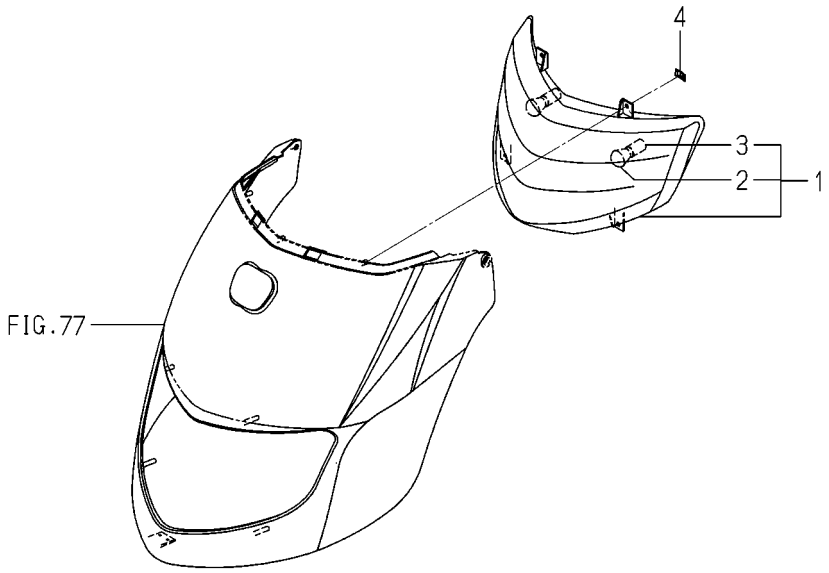

2204-532 -0100

KEY	PART CODE	DESCRIPTION	SPC	TYPE OF MODEL PZ80E16		ITC	COL	GRP	REMARKS
1	2204-532-200-00	LANPHEAD	*	1					
2	2161-532-202-00	BULB/12V18W	*	2					
3	2161-532-203-00	SOCKET	*	2					
4	V350-160-006-00	NUT,SPEED/P6	*	4					

FIG. 96 PANEL(INSTRUMENT)SYSTEM(G TYPE)

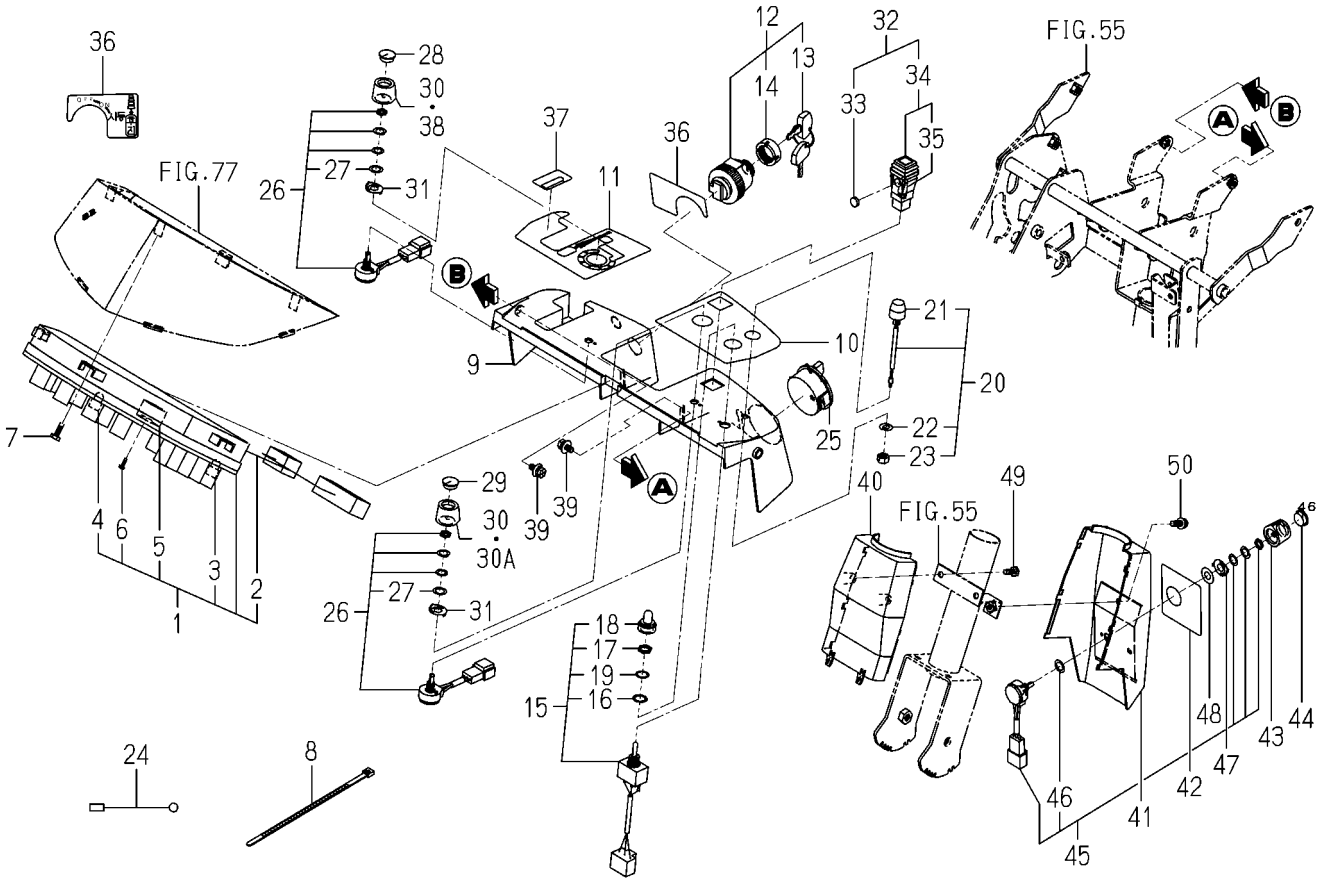

2213-536H-0100

KEY	PART CODE	DESCRIPTION	SPC	TYPE OF MODEL PZ80E16		ITC	COL	GRP	REMARKS
1	2213-536-300-00	MONITOR PANEL/PZ/E16	*	1					
2	2213-536-210-00	LAMPHARNES ASSY	*	1					
3	1614-670-281-00	BULB/LAMP/12V/1.7W	*	5					
4	3650-270-214-00	BULB	*	13					
5	2515-665-210-00	BUZZER	*	1					
6	2204-536-209-00	SCREW	*	1					
7	2161-506-005-00	SCREW/TAPPING/6X16	*	3					
8	1376-402-003-00	BAND,WIRE/140	*	1					
9	2204-536-004-00	PANEL/HOOD	*	1					
10	2204-916-004-00	LABEL/PANEL/LH/K	*	1					
11	2204-916-005-00	LABEL/PANEL/RH/K	*	1					
12	2186-536-210-20	SWITCH,STARTER	*	1					
13	2186-536-211-00	KEY	*	1					
14	2186-536-212-00	NUT/RING	*	1					
15	2186-536-220-10	SWICTH,TOGGLE/3	*	1					
16	2186-536-253-00	RING(M12X18X1)	*	1					
17	2186-536-254-00	NUT(M12X1.0)	*	1					
18	2186-536-255-00	COVER/SWITCH	*	1					
19	2186-536-223-00	WASHER/AT-508	*	1 100001-					
20	2145-542-230-00	SWITCH,PUSH	*	1					
21	2145-542-232-10	BOOT	*	1					
22	V401-160-008-00	WASHER,SP/M 8	*	1					
23	V335-260-008-00	NUT	*	1					
24	8836-502-203-00	HARNESS/SWGND	*	1					
25	3843-271-210-00	SWITVH/COMBI	*	1					
26	1729-609-240-00	SWITCH/VR ASSY	*	2					
27	1675-695-005-00	INSULATOR	*	2					
28	1719-608-013-00	CAP/BL	*	1					
29	1719-608-012-10	CAP/OR	*	1					
30	1729-656-005-00	KNOB	*	2 -102349					

FIG. 96 PANEL(INSTRUMENT)SYSTEM(G TYPE)

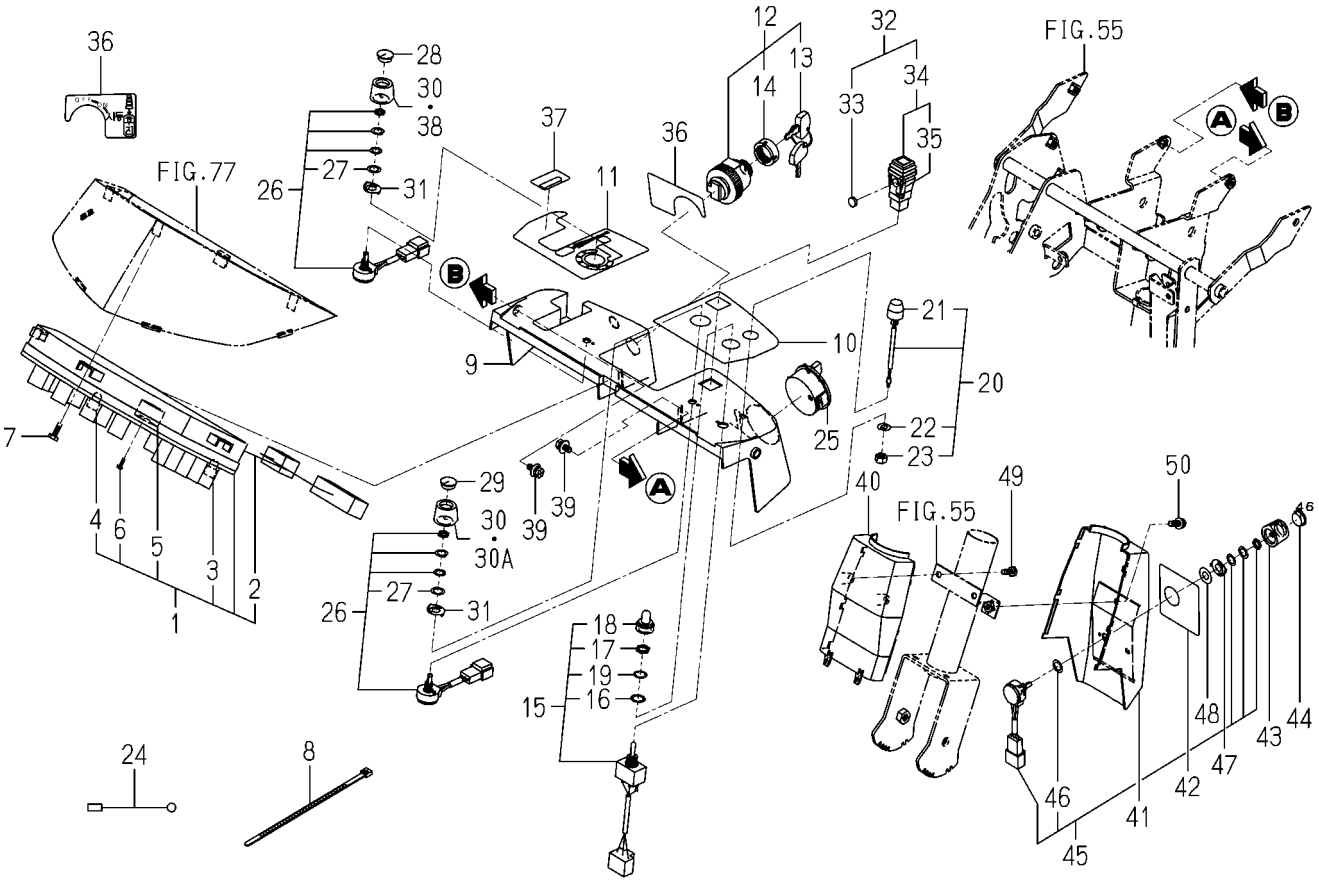

2213-536H-0100

KEY	PART CODE	DESCRIPTION	SPC	TYPE OF MODEL PZ80E16		ITC	COL	GRP	REMARKS
30A	1729-656-005-00	KNOB	*	1					
31	3652-273-002-00	SORING	*	102350-2					
32	2175-509-230-00	SWITCH/ALTERNATOR/G	*	1					
33	2175-509-231-00	CAP,RUBBER	*	1					
34	3801-272-300-00	SWITCH,ALTERNATOR/G	*	1					
35	3801-272-302-00	BULB/LAMP/12V1W	*	1					
36	2204-916-006-00	LABEL/PANEL/REAR/K	*	1					
37	2213-916-039-00	LABEL/SPEED/8/K	*	1					
38	2204-536-551-00	KNOB/HYDRAULIC SENSI	*	1					
39	2144-501-011-10	BOLT/M6X16X16	*	102350-2					
40	2204-536-001-00	COVER(COLUMN/FRONT/P	*	1					
41	2213-536-002-10	COVER/COLUMN/REAR/D	*	1					
42	2213-916-007-00	LABEL/COLUMN/REAR/8K	*	1					
43	1729-656-005-00	KNOB	*	1					
44	1719-608-012-10	CAP/OR	*	1					
45	1729-609-240-00	SWITCH/VR ASSY	*	1					
46	1675-695-005-00	INSULATOR	*	1					
47	3652-273-002-00	SORING	*	1					
48	2213-536-005-00	WASHER/10X20X01	*	1					
49	2161-506-005-00	SCREW/TAPPING/6X16	*	2					
50	V120-366-002-00	SCREW,SEMS	*	1					

FIG. 97 PANEL(INSTRUMENT)SYSTEM(D TYPE)

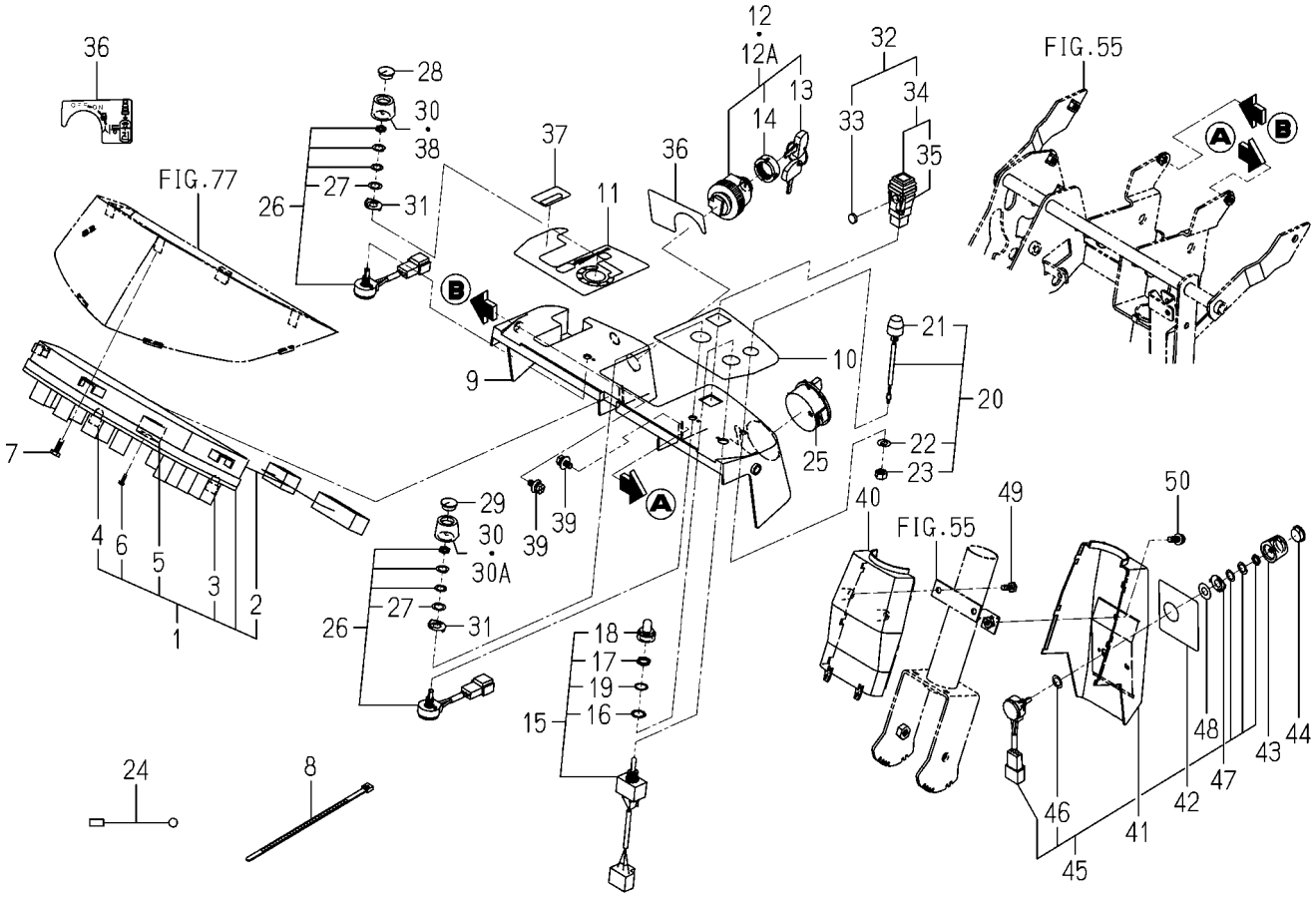

2213-536K-0100

KEY	PART CODE	DESCRIPTION	SPC	TYPE OF MODEL PZ80E16		ITC	COL	GRP	REMARKS
1	2213-536-300-00	MONITOR PANEL/PZ/E16	*	1					
2	2213-536-210-00	LAMPHARNES ASSY	*	1					
3	1614-670-281-00	BULB/LAMP/12V/1.7W	*	5					
4	3650-270-214-00	BULB	*	13					
5	2515-665-210-00	BUZZER	*	1					
6	2204-536-209-00	SCREW	*	1					
7	2161-506-005-00	SCREW/TAPPING/6X16	*	3					
8	1376-402-003-00	BAND,WIRE/140	*	1					
9	2204-536-004-00	PANEL/HOOD	*	1					
10	2204-916-004-00	LABEL/PANEL/LH/K	*	1					
11	2204-916-005-00	LABEL/PANEL/RH/K	*	1					
12	1716-680-200-10	SWITCH/MAIN ASSY	*	1 -101744					
12A	1716-680-200-20	SWITCH/MAIN ASSY	*	1 101745-		1			
13	2186-536-211-00	KEY	*	2					
14	2186-536-212-00	NUT/RING	*	1					
15	2186-536-220-10	SWICTH,TOGGLE/3	*	1					
16	2186-536-253-00	RING(M12X18X1)	*	1					
17	2186-536-254-00	NUT(M12X1.0)	*	1					
18	2186-536-255-00	COVER/SWITCH	*	1					
19	2186-536-223-00	WASHER/AT-508	*	1 100001-					
20	2145-542-230-00	SWITCH,PUSH	*	1					
21	2145-542-232-10	BOOT	*	1					
22	V401-160-008-00	WASHER,SP/M 8	*	1					
23	V335-260-008-00	NUT	*	1					
24	8836-502-203-00	HARNESS/SWGND	*	1					
25	3843-271-210-00	SWITVH/COMBI	*	1					
26	1729-609-240-00	SWITCH/VR ASSY	*	2					
27	1675-695-005-00	INSULATOR	*	2					
28	1719-608-013-00	CAP/BL	*	1					
29	1719-608-012-10	CAP/OR	*	1					

FIG. 97 PANEL(INSTRUMENT)SYSTEM(D TYPE)

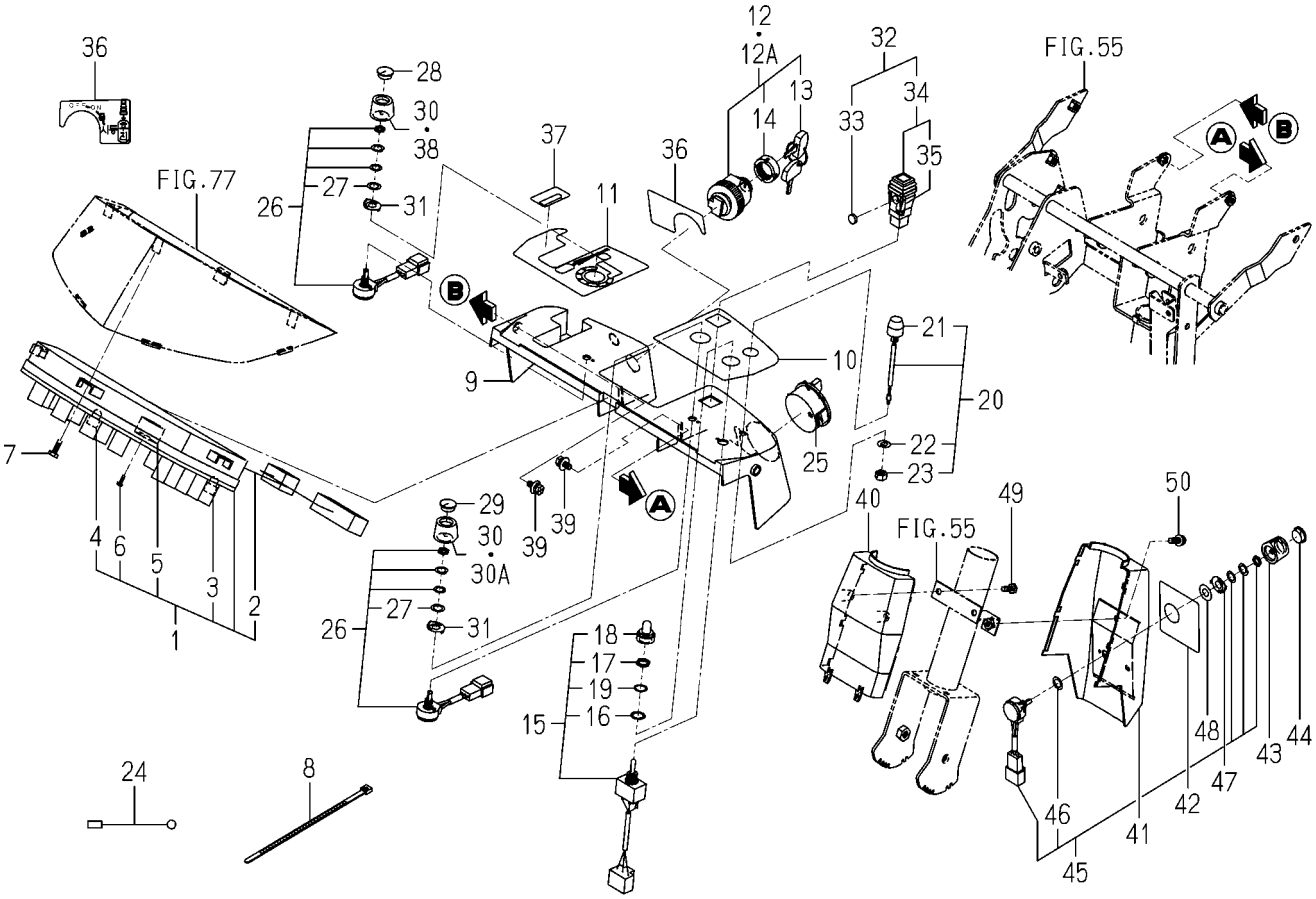

2213-536K-0100

KEY	PART CODE	DESCRIPTION	SPC	TYPE OF MODEL PZ80E16		ITC	COL	GRP	REMARKS
30	1729-656-005-00	KNOB	*	2 -102349					
30A	1729-656-005-00	KNOB	*	1 102350-					
31	3652-273-002-00	SORING	*	2					
32	2175-509-230-00	SWITCH/ALTERNATOR/G	*	1					
33	2175-509-231-00	CAP,RUBBER	*	1					
34	3801-272-300-00	SWITCH,ALTERNATOR/G	*	1					
35	3801-272-302-00	BULB/LAMP/12V1W	*	1					
36	2213-916-013-00	LABEL/PANEL/REAR/8K	*	1					
37	2213-916-039-00	LABEL/SPEED/8/K	*	1					
38	2204-536-551-00	KNOB/HYDRAULIC SENSI	*	1 102350-					
39	2144-501-011-10	BOLT/M6X16X16	*	2					
40	2204-536-001-00	COVER(COLUMN/FRONT/P	*	1					
41	2213-536-002-10	COVER/COLUMN/REAR/D	*	1					
42	2213-916-007-00	LABEL/COLUMN/REAR/8K	*	1					
43	1729-656-005-00	KNOB	*	1					
44	1719-608-012-10	CAP/OR	*	1					
45	1729-609-240-00	SWITCH/VR ASSY	*	1					
46	1675-695-005-00	INSULATOR	*	1					
47	3652-273-002-00	SORING	*	1					
48	2213-536-005-00	WASHER/10X20X01	*	1					
49	2161-506-005-00	SCREW/TAPPING/6X16	*	2					
50	V120-366-002-00	SCREW,SEMS	*	1					

FIG. 98 HARNESS (TRAVELING SECTION)SYSTEM(D-F TYPE)

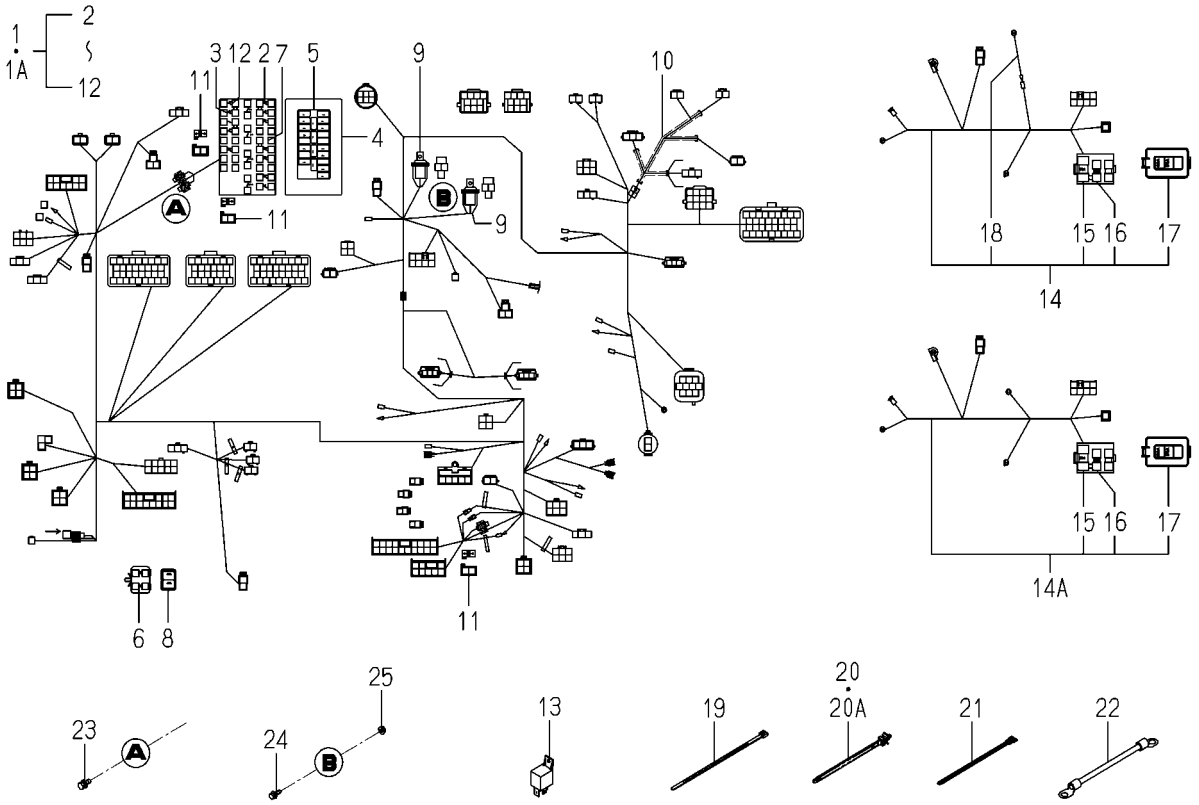

2213-537K-0100

KEY	PART CODE	DESCRIPTION	SPC	TYPE OF MODEL PZ80E16		ITC	COL	GRP	REMARKS
1	2213-537-800-00	HARNESS/MAIN/8DK/F	*	1 -100705					
1A	2213-537-800-50	HARNESS/MAIN/8DK/F	*	1 100706-		3			
2	3821-262-202-00	FUSE/BLADE/32V10A	*	4					
3	3824-247-202-00	FUSE/BLADE/32V05A	*	5					
4	2204-537-202-00	CAP/FUSE BOX	*	1					
5	2213-537-801-00	ORNAMENT/FUSE/8D/K	*	1					
6	1650-650-222-00	FUSE/SLOWBLOW	*	2					
7	3821-262-204-00	FUSE/BLADE/32V20A	*	4					
8	2204-537-501-00	LABEL/FUSE	*	1					
9	1719-650-250-00	RELAY ASSY	*	2					
10	2204-537-220-20	HARNESS/R/REAR ASSY	*	1					
11	3650-262-202-00	DIODE/3.0A	*	3					
12	3827-270-003-00	FUSE/BLADE/32V03A	*	3					
13	1719-650-250-00	RELAY ASSY	*	2					
14	2213-537-120-00	HARNESS/ENGIN/K ASSY	*	1 -101680					
14A	2213-537-120-10	HARNESS/ENGINE/ ASSY	*	1 101681-		1			
15	3829-260-303-00	FUSE,SLOW BLOW	*	1					
16	1614-690-202-00	FUSE/SLOWBLOW	*	1					
17	2213-537-121-00	LABEL/ENGINE/K	*	1					
18	2213-537-102-00	HARNESS/THERMO ASSY	*	1					
19	1376-402-003-00	BAND,WIRE/140	*	5 100001-					
20	2204-537-002-00	BAND	*	13 -102399					
20A	2204-537-002-00	BAND	*	14 102400-					
21	1421-621-038-00	BAND,WIRE/170	*	2 101646-					
22	3623-263-001-00	WIRE,LEAD	*	1					
23	V210-360-601-60	BOLT(SP)/M6X16	*	2 100001-					
24	2505-111-003-00	BOLT/SP	*	2 100001-					
25	V360-260-005-00	NUT/M5	*	2 100001-					

FIG. 99 HARNESS (TRAVELING SECTION)SYSTEM(G-F TYPE)

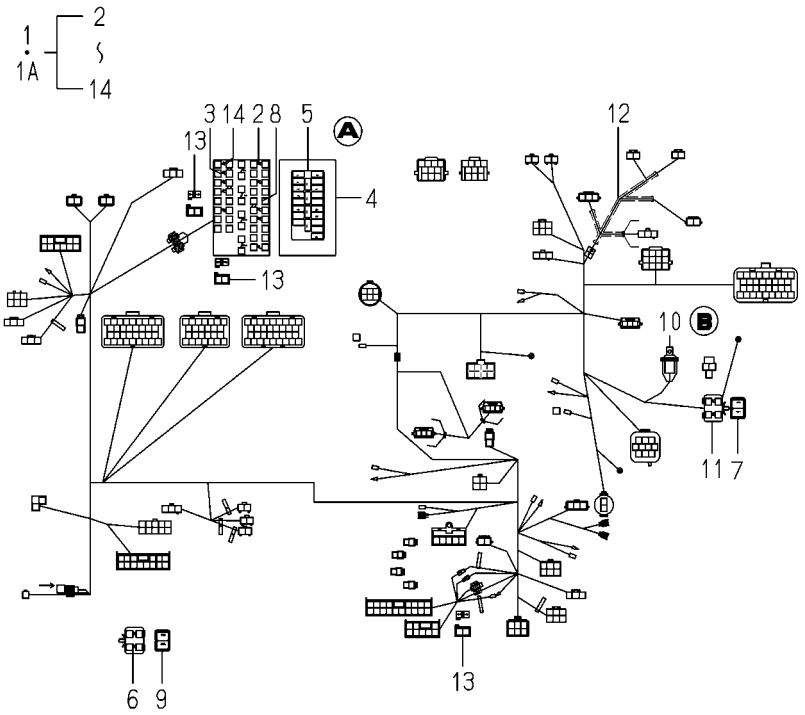

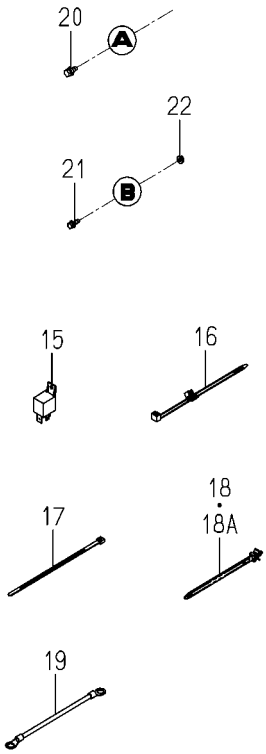

2213-537L-0100

KEY	PART CODE	DESCRIPTION	SPC	TYPE OF MODEL PZ80E16		ITC	COL	GRP	REMARKS
1	2213-537-830-10	HARNESS/MAIN/8GK/F	*	1 -102165					
1A	2213-537-830-40	HARNESS/MAIN/8GK/F	*	1 102166-		1			
2	3821-262-202-00	FUSE/BLADE/32V10A	*	4					
3	3824-247-202-00	FUSE/BLADE/32V05A	*	5					
4	2204-537-202-00	CAP/FUSE BOX	*	1					
5	2213-537-831-00	ORNAMENT/FUSE/8G/K	*	1					
6	1650-650-222-00	FUSE/SLOWBLOW	*	3					
7	2190-916-011-00	LABEL/SLOWBLOW/8FK	*	1					
8	3821-262-204-00	FUSE/BLADE/32V20A	*	3					
9	2204-537-501-00	LABEL/FUSE	*	1					
10	1719-650-250-00	RELAY ASSY	*	1					
11	1650-650-222-00	FUSE/SLOWBLOW	*	2					
12	2204-537-220-20	HARNESS/R/REAR ASSY	*	1					
13	3650-262-202-00	DIODE/3.0A	*	3					
14	3827-270-003-00	FUSE/BLADE/32V03A	*	2					
15	1719-650-250-00	RELAY ASSY	*	1					
16	1560-666-004-00	BAND	*	6					
17	1376-402-003-00	BAND,WIRE/140	*	6 100001-					
18	2204-537-002-00	BAND	*	13 -102399					
18A	2204-537-002-00	BAND	*	14 102400-					
19	1544-623-008-10	HARNESS,WIRE/NO.8	*	1					
20	V210-360-601-60	BOLT(SP)/M6X16	*	2 100001-					
21	2505-111-003-00	BOLT/SP	*	1 100001-					
22	V360-260-005-00	NUT/M5	*	1 100001-					

FIG.100 HARNESS (TRAVELING SECTION)SYSTEM(D TYPE EXCEPT F)

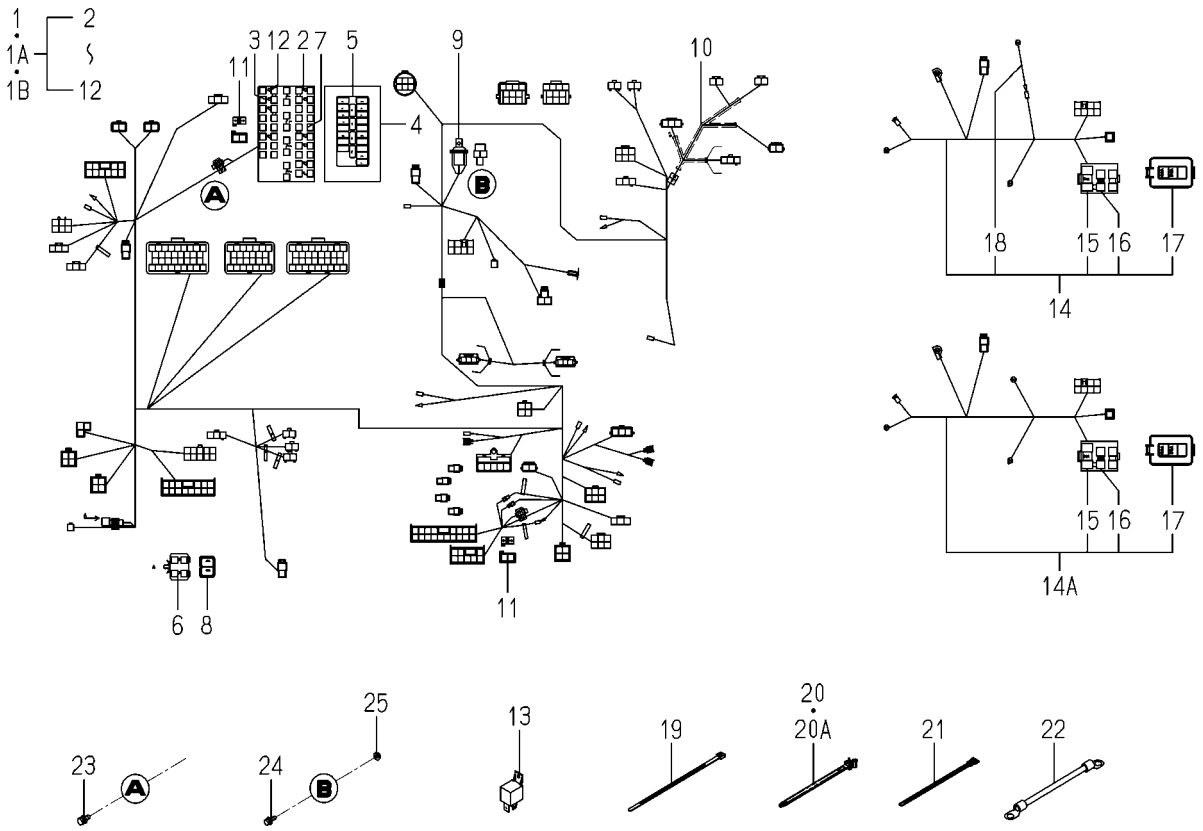

2213-537N-0100

KEY	PART CODE	DESCRIPTION	SPC	TYPE OF MODEL PZ80E16		ITC	COL	GRP	REMARKS
1	2213-537-850-00	HARNESS/MAIN/8D ASSY	*	1 -102188					
1A	2213-537-850-30	HARNESS/MAIN/8D ASSY	*	1 -102349		1			
1B	2213-537-850-40	HARNESS/MAIN/8D ASSY	*	1 102350-		1			
2	3821-262-202-00	FUSE/BLADE/32V10A	*	4					
3	3824-247-202-00	FUSE/BLADE/32V05A	*	4					
4	2204-537-202-00	CAP/FUSE BOX	*	1					
5	2213-537-801-00	ORNAMENT/FUSE/8D/K	*	1					
6	1650-650-222-00	FUSE/SLOWBLOW	*	2					
7	3821-262-204-00	FUSE/BLADE/32V20A	*	4					
8	2204-537-501-00	LABEL/FUSE	*	1					
9	1719-650-250-00	RELAY ASSY	*	1					
10	2204-537-220-20	HARNESS/R/REAR ASSY	*	1					
11	3650-262-202-00	DIODE/3.0A	*	2					
12	3827-270-003-00	FUSE/BLADE/32V03A	*	2					
13	1719-650-250-00	RELAY ASSY	*	1					
14	2213-537-120-00	HARNESS/ENGIN/K ASSY	*	1 -101680					
14A	2213-537-120-10	HARNESS/ENGINE/ ASSY	*	1 101681-		1			
15	3829-260-303-00	FUSE,SLOW BLOW	*	1					
16	1614-690-202-00	FUSE/SLOWBLOW	*	1					
17	2213-537-121-00	LABEL/ENGINE/K	*	1					
18	2213-537-102-00	HARNESS/THERMO ASSY	*	1					
19	1376-402-003-00	BAND,WIRE/140	*	4					
20	2204-537-002-00	BAND	*	14 -102399					
20A	2204-537-002-00	BAND	*	15 102400-					
21	1421-621-038-00	BAND,WIRE/170	*	2 101646-					
22	3623-263-001-00	WIRE,LEAD	*	1					
23	V210-360-601-60	BOLT(SP)/M6X16	*	2 100001-					
24	2505-111-003-00	BOLT/SP	*	1 100001-					
25	V360-260-005-00	NUT/M5	*	1 100001-					

FIG.101 HARNESS (TRAVELING SECTION)SYSTEM(G TYPE EXCEPT F)

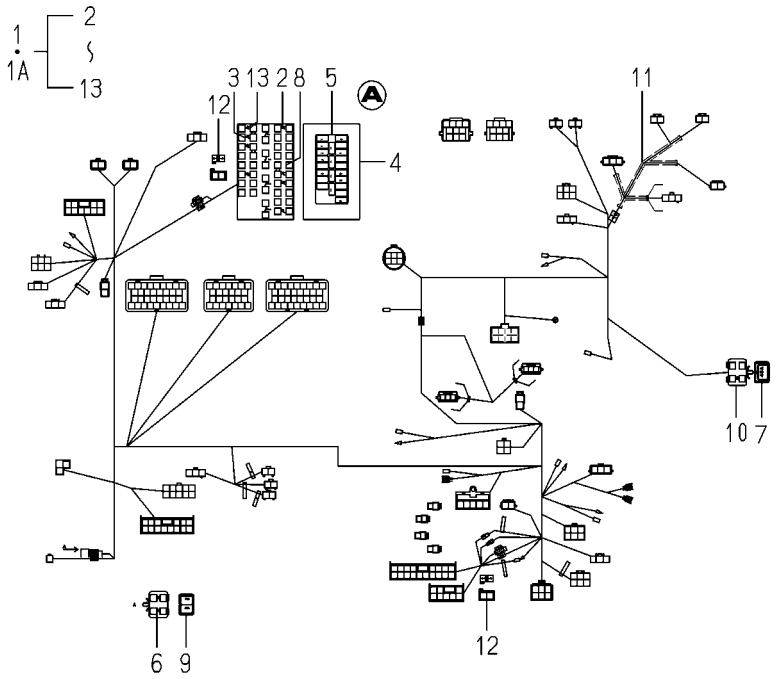

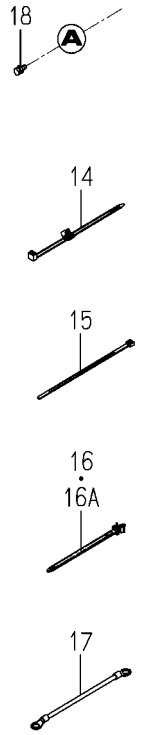

2213-537O-0100

KEY	PART CODE	DESCRIPTION	SPC	TYPE OF MODEL PZ80E16		ITC	COL	GRP	REMARKS
1	2213-537-880-20	HARNESS/MAIN/8GK	*	1 -102187					
1A	2213-537-880-50	HARNESS/MAIN/8G ASSY	*	1 102188-		1			
2	3821-262-202-00	FUSE/BLADE/32V10A	*	4					
3	3824-247-202-00	FUSE/BLADE/32V05A	*	3					
4	2204-537-202-00	CAP/FUSE BOX	*	1					
5	2213-537-831-00	ORNAMENT/FUSE/8G/K	*	1					
6	1650-650-222-00	FUSE/SLOWBLOW	*	2					
7	2186-916-034-10	LABEL/SLOW BLOW	*	1					
8	3821-262-204-00	FUSE/BLADE/32V20A	*	3					
9	2204-537-501-00	LABEL/FUSE	*	1					
10	1650-650-222-00	FUSE/SLOWBLOW	*	1					
11	2204-537-220-20	HARNESS/R/REAR ASSY	*	1					
12	3650-262-202-00	DIODE/3.0A	*	2					
13	3827-270-003-00	FUSE/BLADE/32V03A	*	2					
14	1560-666-004-00	BAND	*	6					
15	1376-402-003-00	BAND,WIRE/140	*	5 102183-					
16	2204-537-002-00	BAND	*	11 -102399					
16A	2204-537-002-00	BAND	*	12 102400-					
17	1544-623-008-10	HARNESS,WIRE/NO.8	*	1					
18	V210-360-601-60	BOLT(SP)/M6X16	*	2 100001-					

FIG.102 HARNESS(PLANTING SECTION)SYSTEM

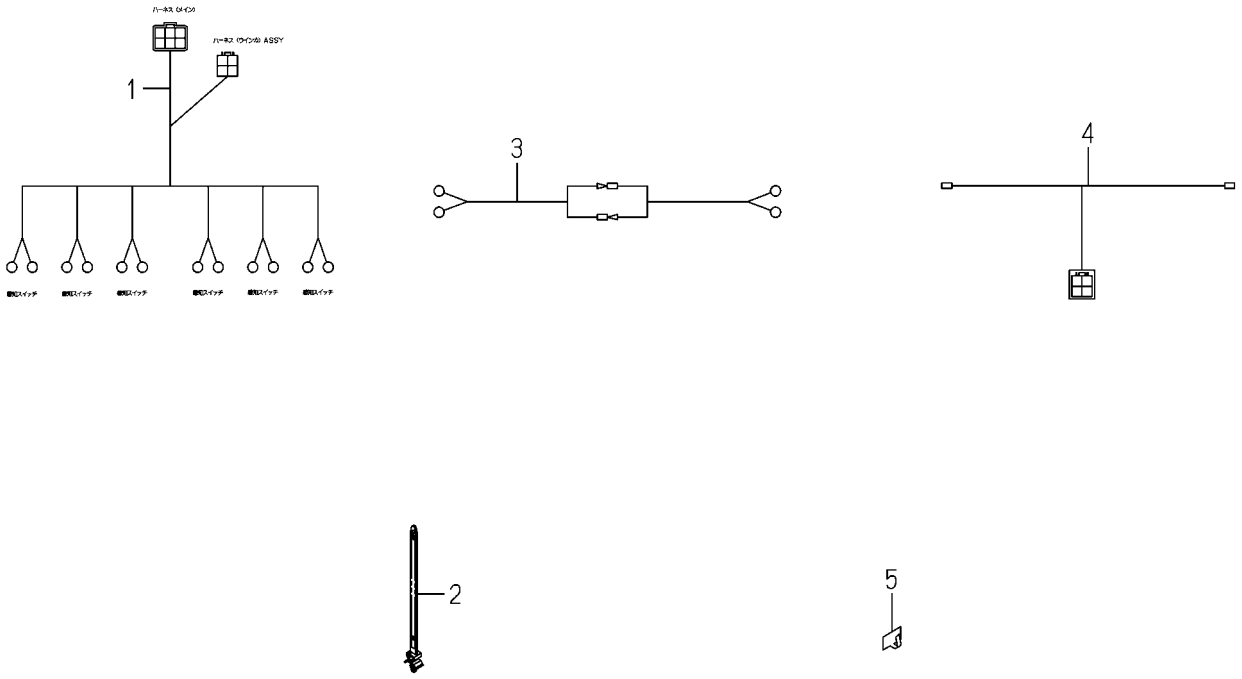

2213-539 -0100

KEY	PART CODE	DESCRIPTION	SPC	TYPE OF MODEL PZ80E16		ITC	COL	GRP	REMARKS
1	2213-539-200-00	HARNESS/SEEDLING TAN	*	1					
2	2204-537-002-00	BAND	*	2					
3	2162-539-230-10	HARNESS,SEEDING TANK	*	2					
4	2190-539-210-00	HARNESS/WINKER	*	1					
5	3737-172-010-00	BAND/202	*	8					

FIG.103 BATTERY SYSTEM(D TYPE)

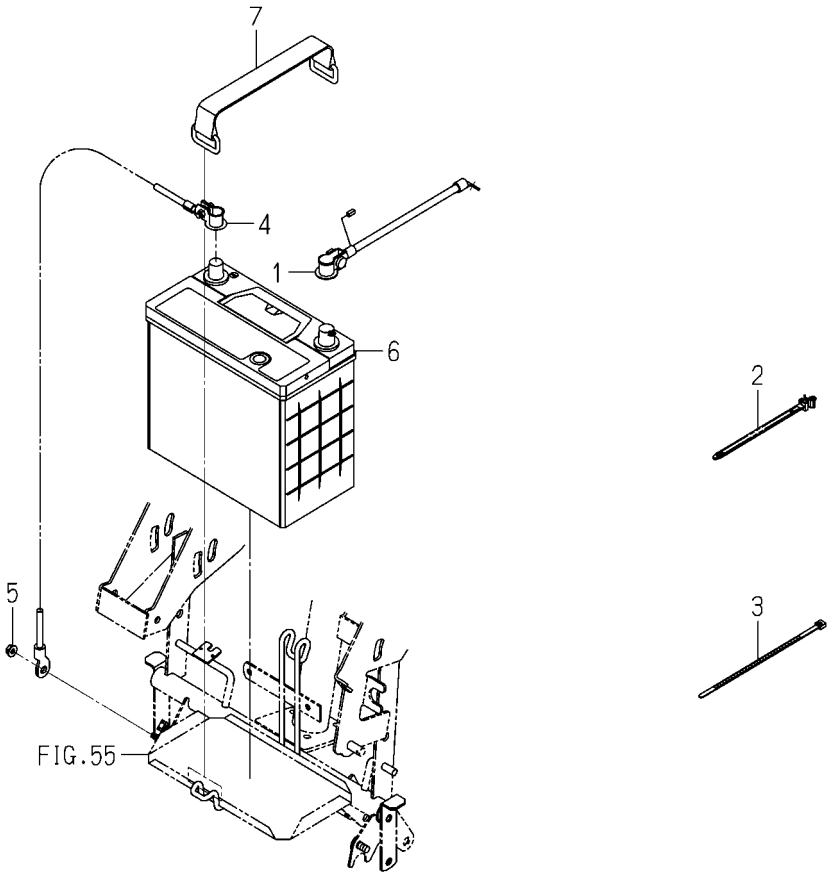

2213-541D-0100

KEY	PART CODE	DESCRIPTION	SPC	TYPE OF MODEL PZ80E16		ITC	COL	GRP	REMARKS
1	2213-541-200-10	HARNESS/BATTERY/D	*	1					
2	2204-537-002-00	BAND	*	2					
3	1376-402-003-00	BAND,WIRE/140	*	1					
4	3679-260-003-00	CABLE/BATTERY/300	*	1					
5	V360-260-006-00	NUT/M6	*	1 100001-					
6	1684-112-300-20	BATTERY/55B24R/ ASSY	*	1					
7	3640-260-200-30	BATTERYSTAY COMP	*	1					

FIG.104 BATTERY SYSTEM(G TYPE)

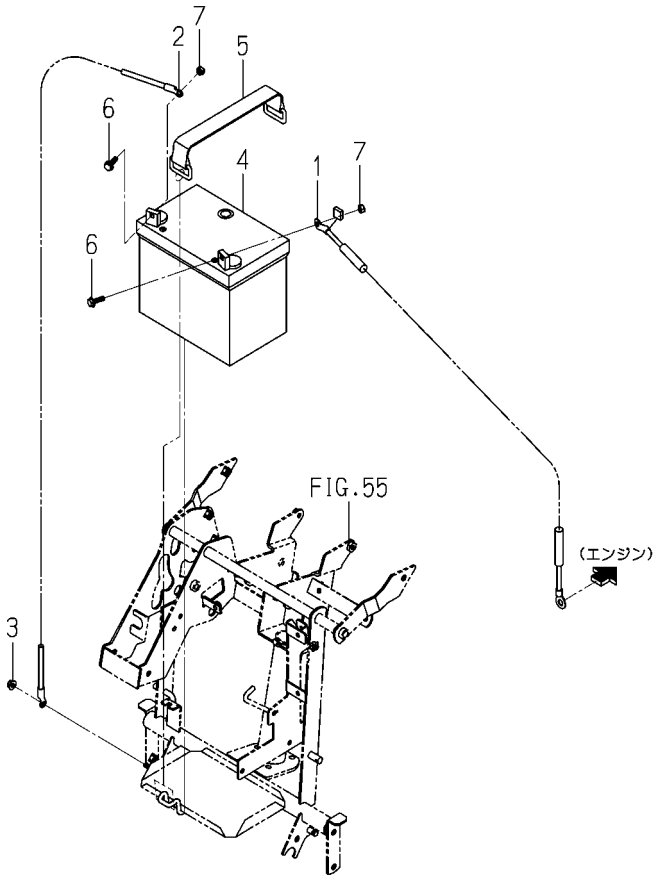

2204-541G-0100

KEY	PART CODE	DESCRIPTION	SPC	TYPE OF MODEL PZ80E16		ITC	COL	GRP	REMARKS
1	2204-541-220-10	HARNESS/BATTERY	*	1					
2	2204-541-004-10	HARNESS/BATTERY EART	*	1					
3	V360-260-006-00	NUT/M6	*	1					
4	2204-541-200-00	BATTERY	*	1					YUTW-34A-19L-00
5	3640-260-200-30	BATTERYSTAY COMP	*	1					
6	2204-541-002-00	BOLT/M6X20	*	2					
7	2204-541-003-00	NUT/M6	*	2					

FIG.105 SWITCH SYSTEM(D-F TYPE)

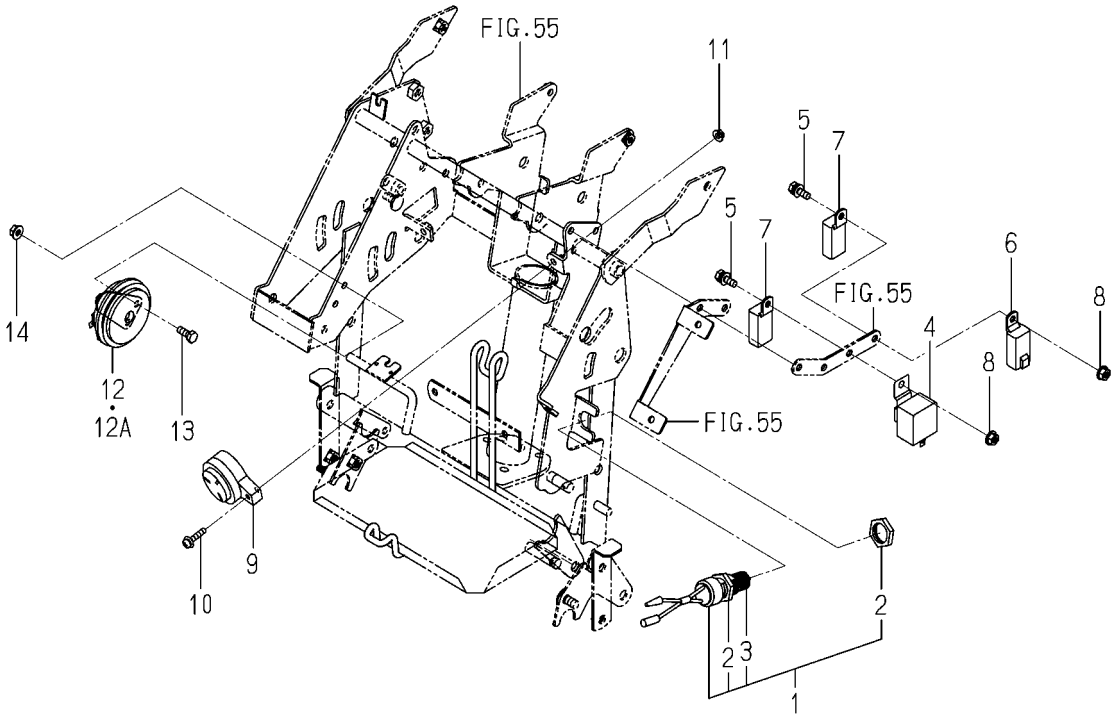

2213-542H-0100

KEY	PART CODE	DESCRIPTION	SPC	TYPE OF MODEL PZ80E16		ITC	COL	GRP	REMARKS
1	2144-542-220-00	SWITCH,SAFETY ASSY	*	1					
2	1491-623-222-00	NUT/M20	*	2					
3	1491-623-223-00	BOOT	*	1					
4	1716-680-290-00	RELAY/FLASHER ASSY	*	1					
5	V210-360-602-00	BOLT/SP	*	2					
6	1690-652-210-00	RELAY ASSY	*	1					
7	1650-658-270-00	RELAY/4P ASSY	*	2					
8	V360-260-006-00	NUT/M6	*	2					
9	2204-542-200-00	BUZZERASSY	*	1					
10	V120-365-002-50	SCREW/M5X25	*	1					
11	V360-260-005-00	NUT/M5	*	1					
12	1740-680-530-00	HORN ASSY	*	1 -102220					
12A	1740-680-530-20	HORN ASSY	*	1 102221-		1			
13	V200-260-601-60	BOLT/M 6X16	*	2					
14	V360-260-006-00	NUT/M6	*	2					

FIG.106 SWITCH SYSTEM(D TYPE EXCEPT F)

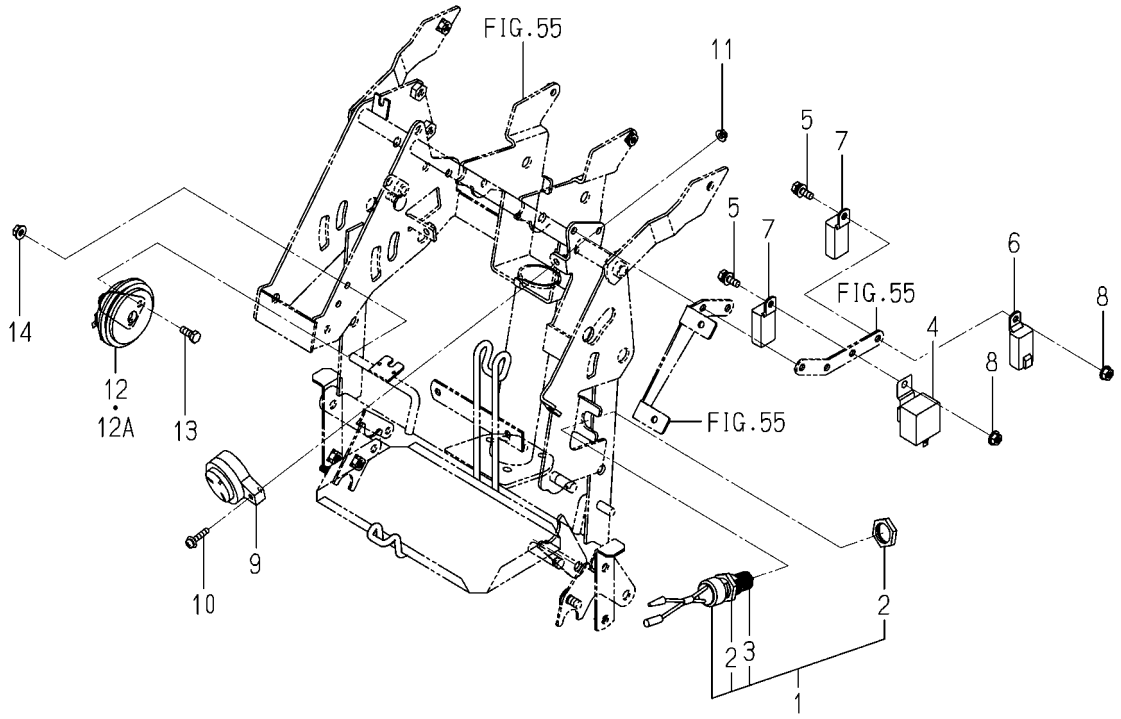

2213-542K-0100

KEY	PART CODE	DESCRIPTION	SPC	TYPE OF MODEL PZ80E16		ITC	COL	GRP	REMARKS
1	2144-542-220-00	SWITCH,SAFETY ASSY	*	1					
2	1491-623-222-00	NUT/M20	*	2					
3	1491-623-223-00	BOOT	*	1					
4	1716-680-290-00	RELAY/FLASHER ASSY	*	1					
5	V210-360-602-00	BOLT/SP	*	2					
6	1690-652-210-00	RELAY ASSY	*	1					
7	1650-658-270-00	RELAY/4P ASSY	*	1					
8	V360-260-006-00	NUT/M6	*	2					
9	2204-542-200-00	BUZZERASSY	*	1					
10	V120-365-002-50	SCREW/M5X25	*	1					
11	V360-260-005-00	NUT/M5	*	1					
12	1740-680-530-00	HORN ASSY	*	1 -102220					
12A	1740-680-530-20	HORN ASSY	*	1 102221-		1			
13	V200-260-601-60	BOLT/M 6X16	*	2					
14	V360-260-006-00	NUT/M6	*	2					

FIG.107 SWITCH SYSTEM(G TYPE)

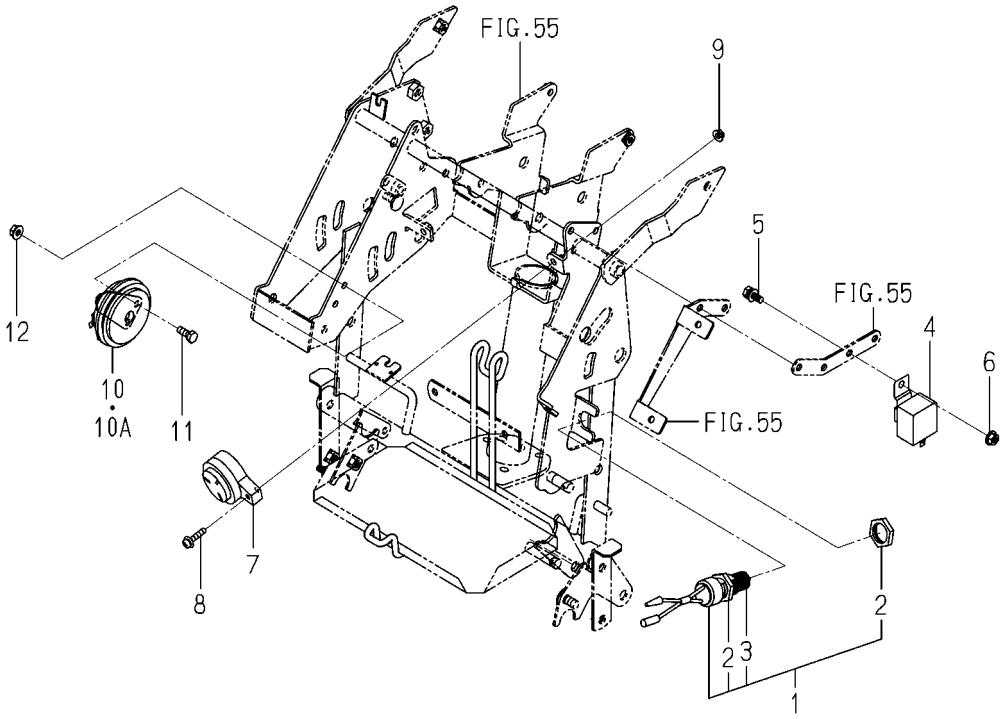

2213-542N-0100

KEY	PART CODE	DESCRIPTION	SPC	TYPE OF MODEL PZ80E16		ITC	COL	GRP	REMARKS
1	2144-542-220-00	SWITCH,SAFETY ASSY	*	1					
2	1491-623-222-00	NUT/M20	*	2					
3	1491-623-223-00	BOOT	*	1					
4	1716-680-290-00	RELAY/FLASHER ASSY	*	1					
5	V210-360-601-60	BOLT(SP)/M6X16	*	1					
6	V360-260-006-00	NUT/M6	*	1					
7	2204-542-200-00	BUZZERASSY	*	1					
8	V120-365-002-50	SCREW/M5X25	*	1					
9	V360-260-005-00	NUT/M5	*	1					
10	1740-680-530-00	HORN ASSY	*	1 -102220					
10A	1740-680-530-20	HORN ASSY	*	1 102221-		1			
11	V200-260-601-60	BOLT/M 6X16	*	2					
12	V360-260-006-00	NUT/M6	*	2					

FIG.108 CONTROLLER SYSTEM

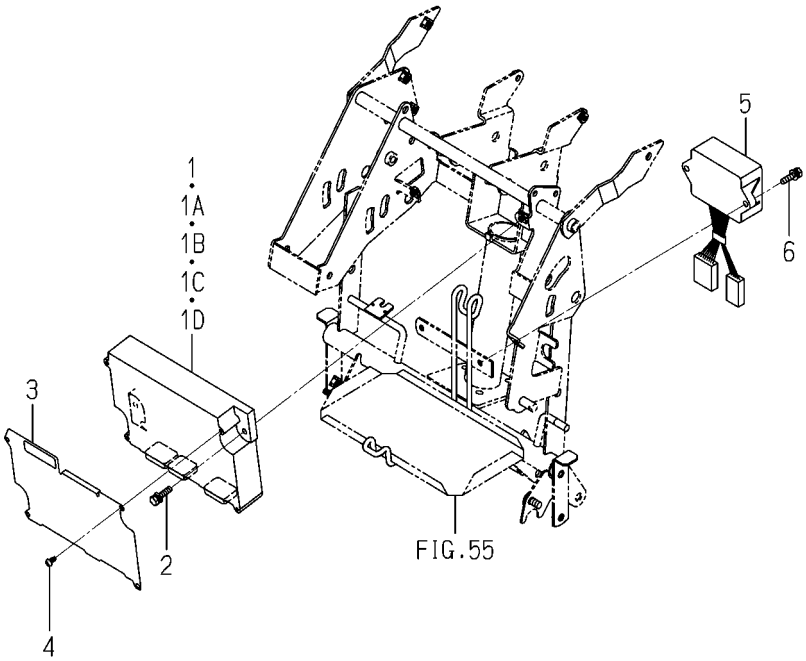

2213-545 -0100

KEY	PART CODE	DESCRIPTION	SPC	TYPE OF MODEL PZ80E16		ITC	COL	GRP	REMARKS
1	2213-545-300-20	CONTROLLER/PZ/8 ASSY	*	1 -101046					
1A	2213-545-300-50	CONTROLLER/PZ/8 ASSY	*	1 -102213		1			
1B	2213-545-300-60	CONTROLLER/PZ/8 ASSY	*	1 -102349		1			
1C	2213-545-300-70	CONTROLLER/PZ/8 ASSY	*	1 -102400		1			
1D	2213-545-300-80	CONTROLLER/PZ/8 ASSY	*	1 102401-		1			
2	V210-360-602-50	BOLT/SP	*	2					
3	2204-545-007-10	COVER/CONTROLLER	*	1					
4	1670-658-015-00	TAPPINGSCREW	*	4					
5	2204-545-500-00	BOX/RELAY/PZ	*	1					
6	V210-360-602-50	BOLT/SP	*	2					

FIG.109 CLUTCH(PLANTING)SYSTEM

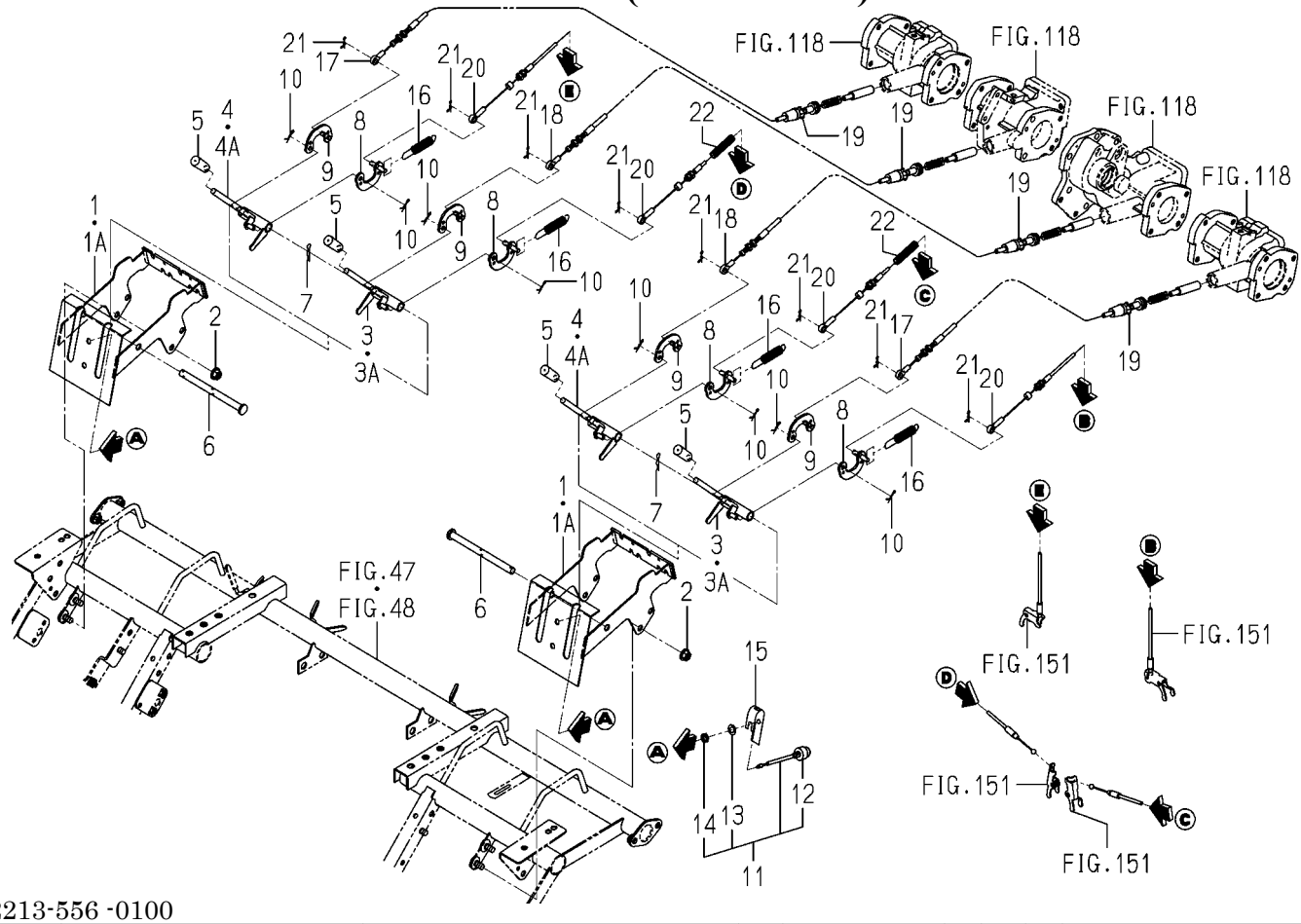

2213-556 -0100

KEY	PART CODE	DESCRIPTION	SPC	TYPE OF MODEL PZ80E16		ITC	COL	GRP	REMARKS
1	2204-556-250-50	HOLDR/CABLE COMP	*	2 -101649					
1A	2204-556-250-70	HOLDR/CABLE COMP	*	2 101650-		1			
2	V362-260-008-00	NUT/WASHER	*	4					
3	2204-556-210-00	LEVER/LH	*	2 -102400					
3A	2204-556-210-10	LEVER/RIDGE CLUTCH/L	*	2 102401-		1			
4	2204-556-220-00	LEVER/RH	*	2 -102400					
4A	2204-556-220-10	LEVER/RIDGE CLUTCH/R	*	2 102401-		1			
5	2204-556-003-00	CAP/GREEN/8	*	4					
6	2204-556-001-00	PIN/10X135	*	2					
7	3505-704-003-00	PIN,HAIR (10)	*	2					
8	2204-556-240-00	PLATE	*	4					
9	2204-556-230-00	PLATE/LH	*	4					
10	2161-735-005-00	PIN	*	8					
11	2145-542-230-00	SWITCH,PUSH	*	2					
12	2145-542-232-10	BOOT	*	2					
13	V401-160-008-00	WASHER,SP/M 8	*	2					
14	V335-260-008-00	NUT	*	2					
15	8838-741-004-00	PLATE	*	2					
16	2161-615-012-00	SPRING/HE071	*	4					
17	2213-556-210-10	CABLE/CLUTCH/8/SIDE	*	2					
18	2204-556-410-00	CABLE(AZE CLUTCH/5/S	*	2					
19	V705-140-017-00	RING,SNAP/17 C	*	4					
20	2204-556-560-00	CABLE/SEEDLING SLIDE	*	4					
21	2161-735-005-00	PIN	*	8					
22	2213-556-001-00	CORRUGATED TUBE/07X7	*	2					

FIG.110 DRIVE(ROTOR)SYSTEM

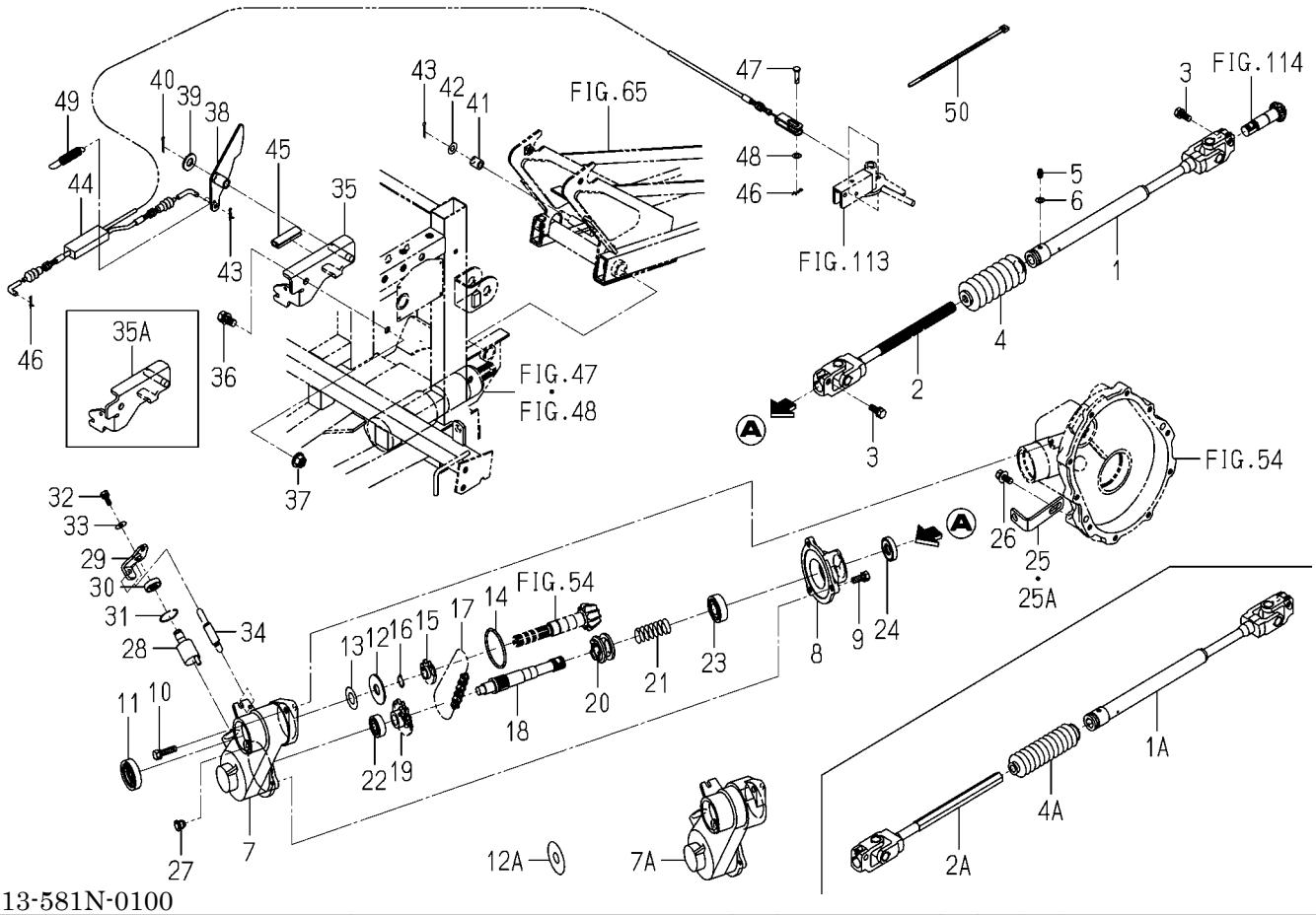

2213-581N-0100

KEY	PART CODE	DESCRIPTION	SPC	TYPE OF MODEL PZ80E16		ITC	COL	GRP	REMARKS
1	2204-581-230-30	SHAFT/ROTOR/REAR	*	1 -101649					
1A	2204-581-230-40	SHAFT/ROTOR/REAR	*	1 101650-		3			
2	2204-581-270-00	JOINT	*	1 -101649					
2A	2213-581-200-00	SHAFT/ROTOR/FRONT/8	*	1 101650-					
3	V211-560-802-50	BOLT,SEMS/M8X25 7T	*	2					
4	2145-420-001-20	BOOT/SHAFT	*	1 -102399					
4A	2204-581-049-00	BOOTS/ROTOR/DRIVE	*	1 102400-					
5	V760-150-000-00	NIPPLE,GREASE	*	1					
6	V411-260-006-00	WASHER / M6	*	1					
7	2213-581-004-10	CASE/ROTARY/8	*	1 -101046					
7A	2213-581-004-20	CASE/ROTARY/8	*	1 101047-		1			
8	2204-581-035-00	COVER/ROTER	*	1					
9	V211-260-802-00	BOLT/S	*	3					
10	V211-260-803-00	BOLT,SEMS	*	1					
11	2145-312-002-00	SEAL,OIL/TC6-254510	*	1					
12	2204-581-046-00	RING/16X45X02	*	1 -102260					
12A	2204-581-046-10	RING/16X50X02	*	1 102261-		1			
13	2130-732-205-00	WASHER	*	1					
14	V721-103-105-50	O-RING/G55	*	1					
15	2213-581-015-10	SPROCKET/8/DRIVE	*	1					
16	V704-140-016-00	RING,SNAP/16 C	*	1					
17	2213-581-019-00	CHAIN/ROLLER/41X034	*	1					
18	2213-581-013-10	SHAFT/DRIVE/8	*	1					
19	2204-581-014-10	SPROCKET/12	*	1					
20	2204-581-003-10	CLUTCH	*	1					
21	2204-581-038-00	SPRING/HC054	*	1					
22	V600-110-620-10	BEARING,RB/6201	*	1					
23	V600-110-620-30	BEARING,RB/6203	*	1					
24	V744-117-350-70	SEAL/OIL	*	1					
25	2213-581-022-10	PLATE/ROTARYCASE	*	1 -101046					

FIG.110 DRIVE(ROTOR)SYSTEM

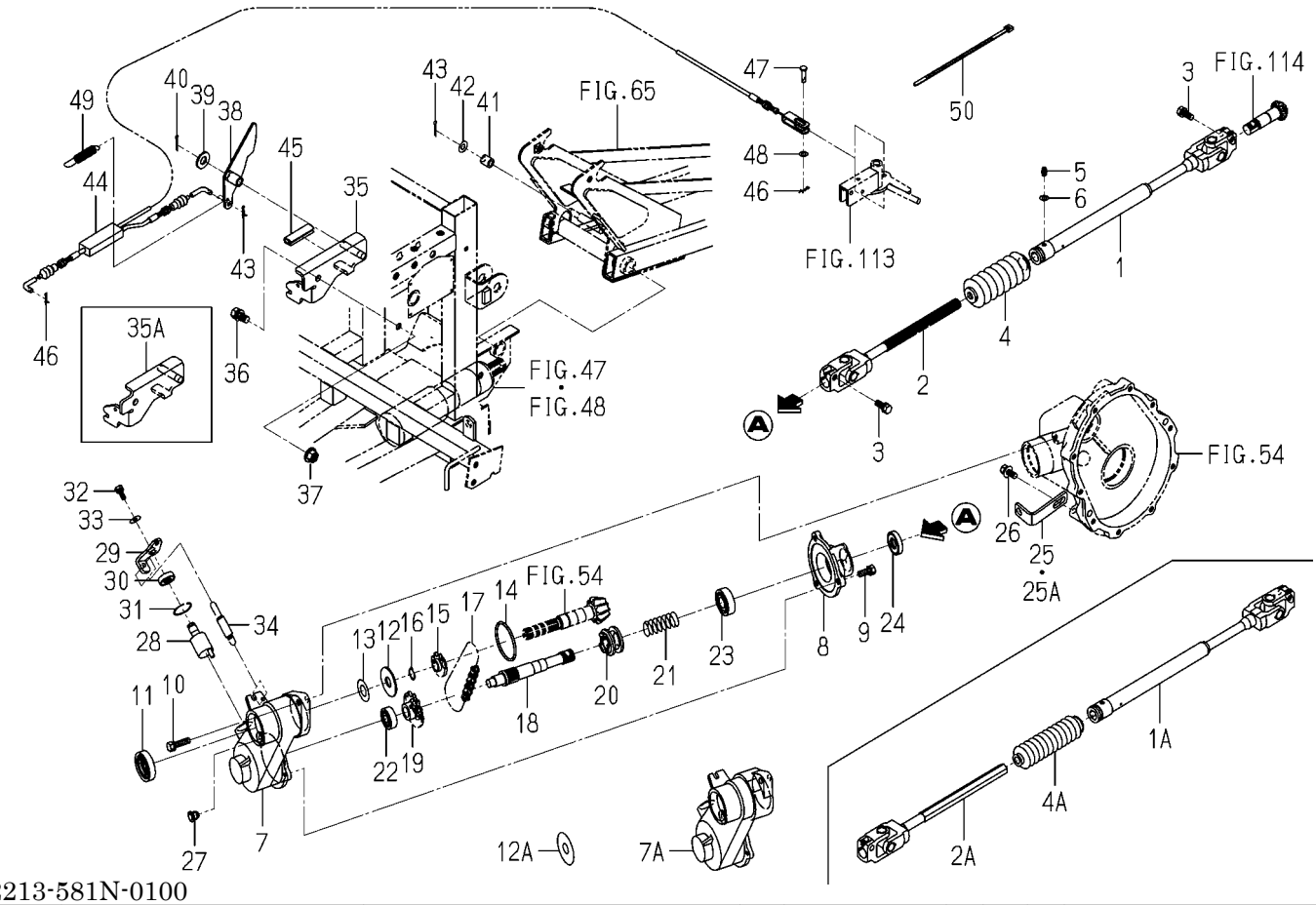

2213-581N-0100

KEY	PART CODE	DESCRIPTION	SPC	TYPE OF MODEL PZ80E16		ITC	COL	GRP	REMARKS
25A	2213-581-022-20	PLATE/ROTARYCASE	*	1 101047-		1			
26	V211-360-802-00	BOLT/SP	*	2					
27	2186-738-038-20	CAP/10	*	1					
28	2186-423-250-10	SHIFTER,FEEDING	*	1					
29	2204-581-005-00	PLATE,ARM/ROTER	*	1					
30	V744-112-250-70	SEAL,OIL/TC12257	*	1					
31	V705-140-025-00	RING,SNAP/25 C	*	1					
32	V210-260-601-60	BOLT/S	*	1					
33	3560-503-302-00	WASHER,WIRE TENSION	*	1					
34	2161-615-014-00	SPRING,HE071	*	1					
35	2213-581-280-00	PLATE/CABLE/ROTARY8	*	1 -101268					
35A	2213-581-280-10	PLATE/CABLE/ROTARY8	*	1 101269-		1			
36	V211-261-002-00	BOLT,SEMS	*	1					
37	V363-260-010-00	NUT/M10	*	1					
38	2213-581-290-10	CAM/CABLE/ROTARY/8	*	1					
39	V411-260-012-00	WASHER /M12	*	1					
40	V500-163-002-00	PIN,SPLIT/3 X20	*	1					
41	2186-533-002-00	ROLLER	*	1					
42	V411-260-008-00	WASHER,PL/M 8	*	1					
43	V500-163-002-00	PIN,SPLIT/3 X20	*	1					
44	2204-581-027-20	CABLE,CLUTCH/ROTER	*	1					
45	3650-201-006-00	PROTECTOR,ENGINE	*	1					
46	2161-735-005-00	PIN	*	3					
47	2130-601-013-00	PIN	*	1					
48	V411-260-006-00	WASHER / M6	*	1					
49	2161-615-012-00	SPRING/HE071	*	1					
50	1376-402-003-00	BAND,WIRE/140	*	2					

FIG.111 ROTOR SYSTEM(1/2)

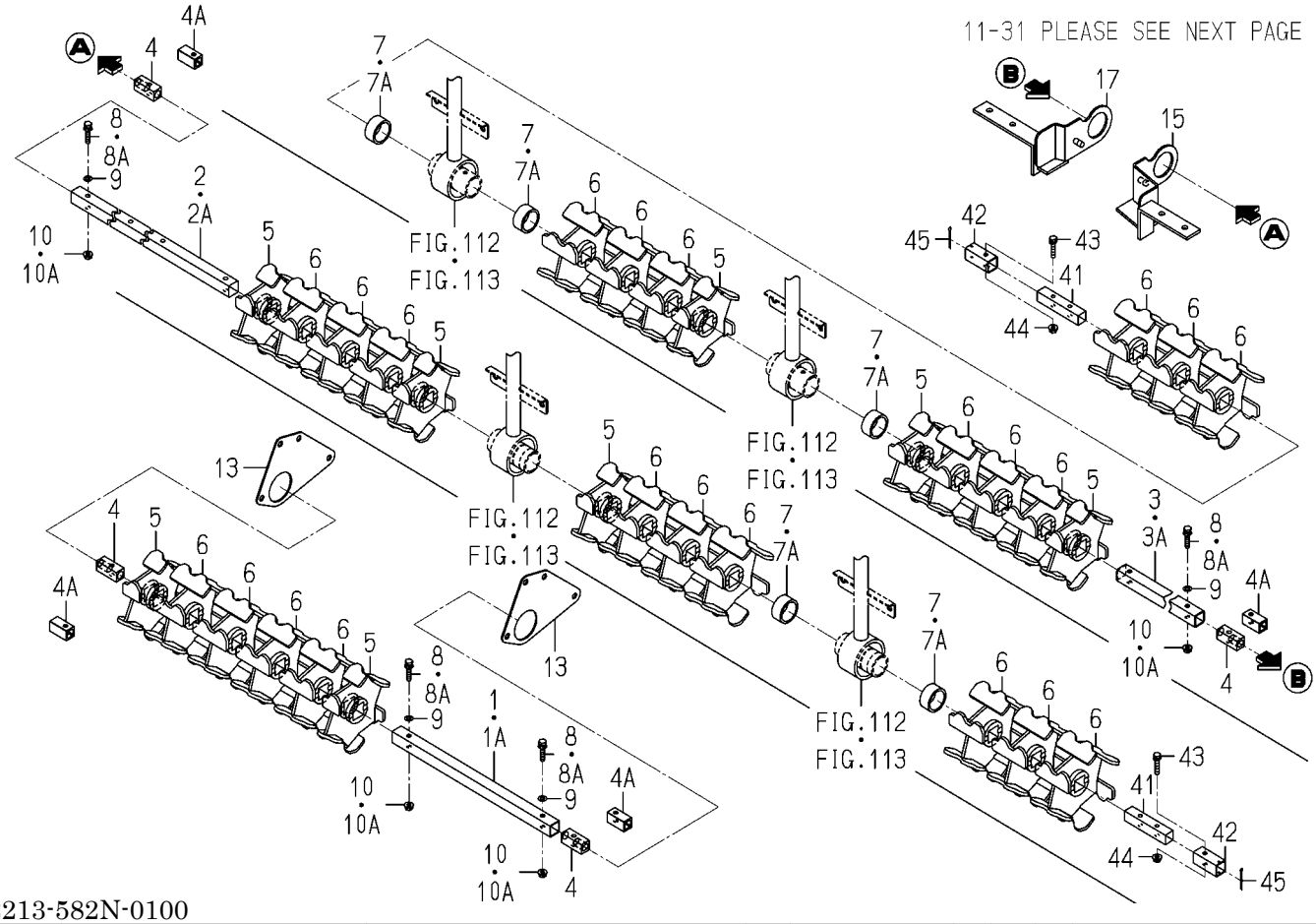

2213-582N-0100

KEY	PART CODE	DESCRIPTION	SPC	TYPE OF MODEL PZ80E16		ITC	COL	GRP	REMARKS
1	2204-582-023-20	SHAFT/ROTARY/6/CENTE	*	1 -102184					
1A	2204-582-023-30	SHAFT/ROTARY/6/CENTE	*	1 102185-		1			
2	2213-582-021-20	SHAFT/ROTARY/8/LH	*	1 -102184					
2A	2213-582-021-30	SHAFT/ROTARY/8/LH	*	1 102185-		1			
3	2213-582-022-20	SHAFT/ROTARY/8/RH	*	1 -102184					
3A	2213-582-022-30	SHAFT/ROTARY/8/RH	*	1 102185-		1			
4	2204-582-026-20	HUB/ROTOR	*	4 -102184					
4A	2213-582-012-00	HUB/ROTOR/8	*	4 102185-					
5	2204-582-002-10	ROTER/36	*	8					
6	2204-582-003-00	ROTER/72	*	22					
7	2213-582-005-10	COLLAR/31X38X16	*	5 -101649					
7A	2213-582-005-20	COLLAR/31X38X15	*	5 101650-		1			
8	2213-582-032-00	BOLT	*	4 -102184					
8A	2213-582-032-10	BOLT/M6X36	*	4 102185-		1			
9	V411-260-006-00	WASHER / M6	*	4					
10	V360-260-006-00	NUT/M6	*	4 -102184					
10A	V301-260-006-00	NUT/M6	*	8 102185-					
11	2213-582-310-20	COVER/ROTARY/8/CENTE	*	1 -101649			6G		
11A	2213-582-310-30	COVER/ROTARY/8/CENTE	*	1 101650-		1	6G		
12	2213-582-031-00	PLATE/BASE	*	2					
13	V211-260-801-60	BOLT,SEMS (S) M8X16	*	4					
14	2213-582-250-20	STAY/ROTARY/LH COMP	*	1					
15	V211-260-801-60	BOLT,SEMS (S) M8X16	*	2					
16	2213-582-350-20	STAY/ROTARY/RH COMP	*	1					
17	V211-260-801-60	BOLT,SEMS (S) M8X16	*	2					
18	2204-582-013-00	BUSH/ROTER	*	2					
19	2204-582-016-00	WASHER/41X54X01	*	2					
20	2204-582-350-40	PLATE/COVER/LH COMP	*	1					
21	2204-582-360-40	PLATE/COVER/RH COMP	*	1					
22	V211-360-805-00	BOLT,SEMS (SP)	*	2					

FIG.111 ROTOR SYSTEM(2/2)

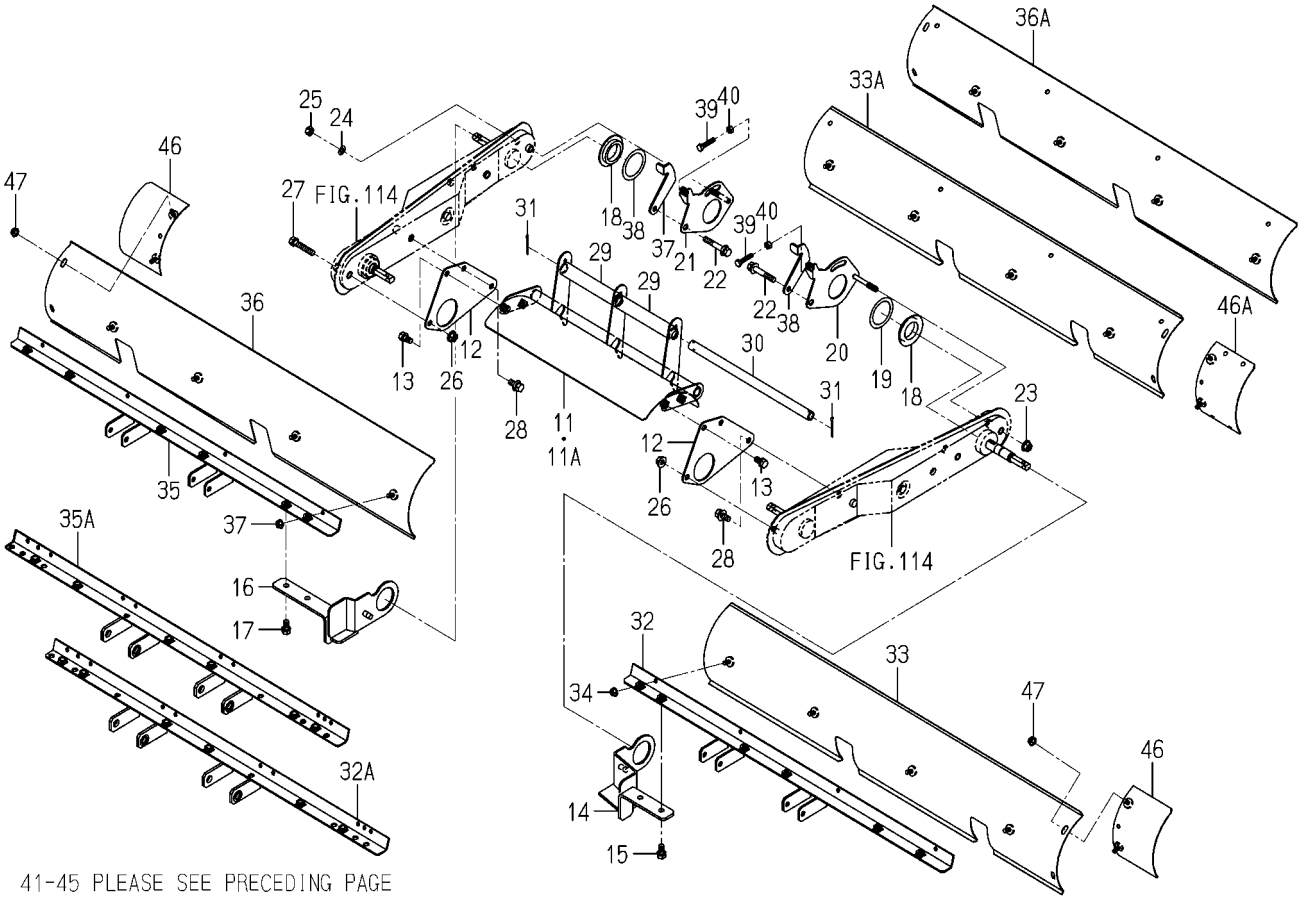

41-45 PLEASE SEE PRECEDING PAGE

2213-582N-0100

KEY	PART CODE	DESCRIPTION	SPC	TYPE OF MODEL PZ80E16		ITC	COL	GRP	REMARKS
23	V362-260-008-00	NUT/WASHER	*	1 100001-					
24	V401-160-008-00	WASHER,SP/M 8	*	2 100001-					
25	V304-260-008-00	NUT	*	2 100001-					
26	V362-260-008-00	NUT/WASHER	*	2					
27	V211-260-804-50	BOLT(S) M8X45	*	1					
28	V211-360-802-00	BOLT/SP	*	2					
29	2204-582-012-00	ROLLER(ROTARY)	*	2					
30	2204-582-011-00	TUBE/ROLLER	*	1					
31	2204-582-015-00	PIN,SPLIT/3X30/SUS	*	2					
32	2213-582-260-10	STAY/COVER/LH COMP	*	1 -102177					
32A	2213-582-260-30	STAY/COVER/LH COMP	*	1 102178-		1			
33	2213-582-240-10	COVER/ROTARY/8/LH	*	1 -101649			6G		
33A	2213-582-240-20	COVER/ROTARY/8/LH	*	1 101650-		1	6G		
34	V360-260-006-00	NUT/M6	*	4					
35	2213-582-360-10	STAY/COVER/RH COMP	*	1 -102177					
35A	2213-582-360-30	STAY/COVER/RH COMP	*	1 102178-		1			
36	2213-582-330-10	COVER/ROTARY/8/RH	*	1 -101649			6G		
36A	2213-582-330-20	COVER/ROTARY/8/RH	*	1 101650-		1	6G		
37	V360-260-006-00	NUT/M6	*	4					
38	2204-582-028-10	CAM/SWING	*	2					
39	V200-260-603-00	BOLT/M 6X30	*	2					
40	V301-260-006-00	NUT/M6	*	2					
41	2213-582-023-10	JOINT/ROTARY	*	2					
42	2213-582-024-00	SHAFT/ROTARY/OUT	*	2					
43	V210-660-603-00	BOLT/SP	*	4					
44	V360-260-006-00	NUT/M6	*	4					
45	2204-582-015-00	PIN,SPLIT/3X30/SUS	*	2					
46	2213-582-370-10	COVER/OUT COMP	*	2 -102349					
46A	2213-582-370-20	COVER/OUT COMP	*	2 102350-		1			
47	V360-260-006-00	NUT/M6	*	4					

FIG.112 LEVER(1/2) (DEPTH/ROTOR)SYSTEM(NO.101650-)

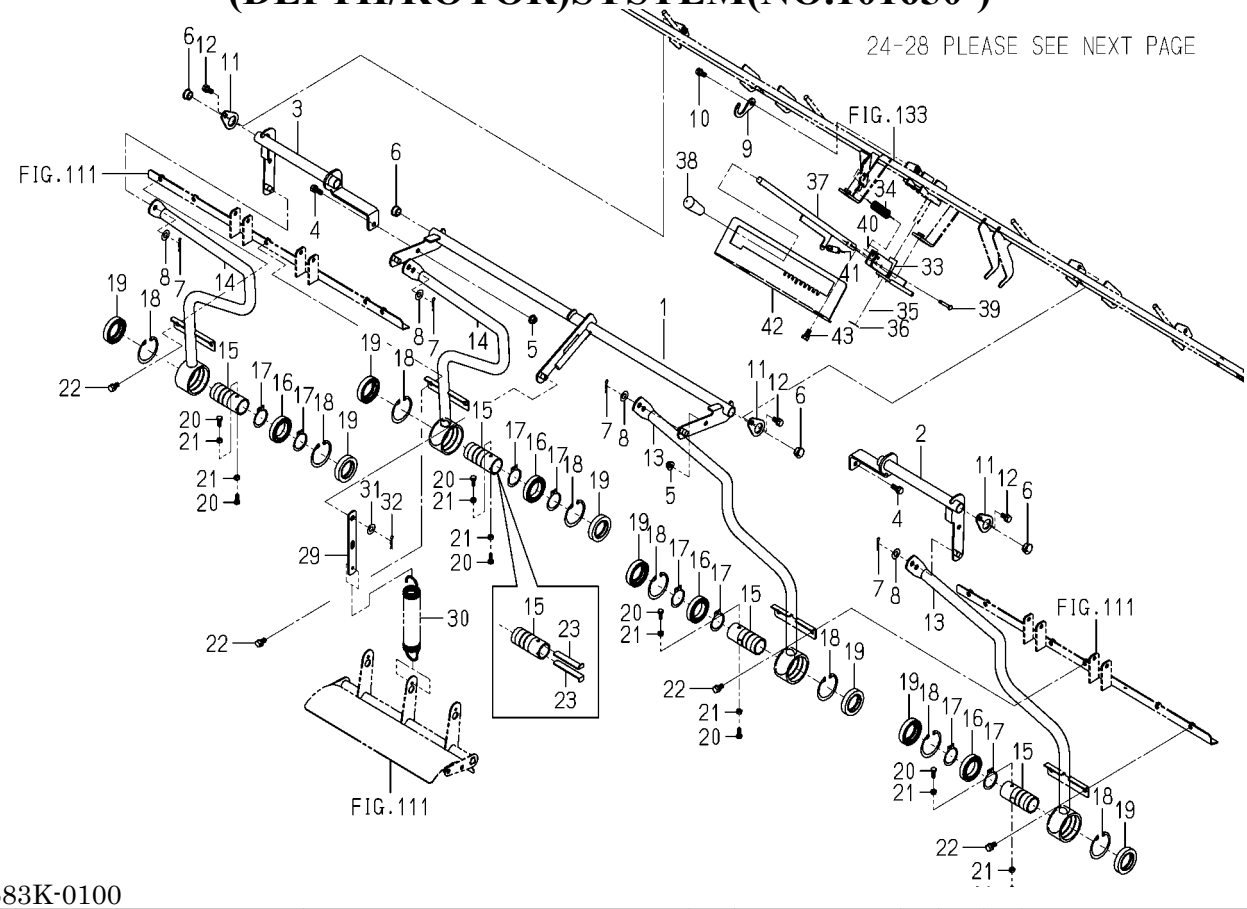

2213-583K-0100

KEY	PART CODE	DESCRIPTION	SPC	TYPE OF MODEL PZ80E16		ITC	COL	GRP	REMARKS
1	2213-583-200-20	FRAME/ROTARY/8 COMP	*	1 101650-		3			
2	2213-583-240-10	FRAME/ROTARY/LH COMP	*	1 101650-		1			
3	2213-583-250-10	FRAME/ROTARY/RH COMP	*	1 101650-		1			
4	V211-260-802-00	BOLT/S	*	2 101650-					
5	V362-260-008-00	NUT/WASHER	*	2 101650-					
6	3526-704-001-00	CAP	*	6 101650-					
7	3505-704-003-00	PIN,HAIR (10)	*	4 101650-					
8	V411-260-010-00	WASHER/M10	*	4 101650-					
9	2213-583-012-00	HOLDER/ROTARY/CENTER	*	1 101650-					
10	V211-260-801-60	BOLT,SEMS (S) M8X16	*	1 101650-					
11	2213-583-011-00	HOLDER/ROTARY/8	*	3 101650-					
12	V211-260-801-60	BOLT,SEMS (S) M8X16	*	3 101650-					
13	2213-583-210-10	HOLDER/8/LH COMP	*	2 101650-					
14	2213-583-300-10	HOLDER/8/RH COMP	*	2 101650-					
15	2213-582-001-00	HUB/29X35X80/8L	*	4 101650-					
16	1135-709-002-00	R.B.B	*	4 101650-					
17	V704-140-035-00	RING,SNAP/35 C	*	8 101650-					
18	V707-140-055-00	RING/SNAP	*	8 101650-					
19	2204-583-016-00	OILSEAL/TC355511	*	8 101650-					
20	V200-360-601-60	BOLT/M6X16	*	8 101650-					
21	V301-260-006-00	NUT/M6	*	8 101650-					
22	V211-260-801-60	BOLT,SEMS (S) M8X16	*	8 101650-					
23	2213-582-006-00	PLATE/I/14X79	*	8 101650-					
24	2213-583-220-20	ARM/ROTARY COMP	*	2 101650-					
25	1380-401-001-00	PIN/75	*	4 101650-					
26	7957-405-003-00	PIN/HAIR	*	4 101650-					
27	2213-583-310-10	BRACKET/ROTARY COMP	*	2 101650-					
28	V710-140-010-00	RING,SNAP/E10	*	6 101650-					
29	2213-583-001-00	STAY/ROTOR/SPRING/8	*	1 101650-					
30	2204-583-015-00	SPRING/HE200	*	1 101650-					

FIG.112 LEVER(2/2) (DEPTH/ROTOR)SYSTEM(NO.101650-)

31-43 PLASE SEE PRECEDING PAGE

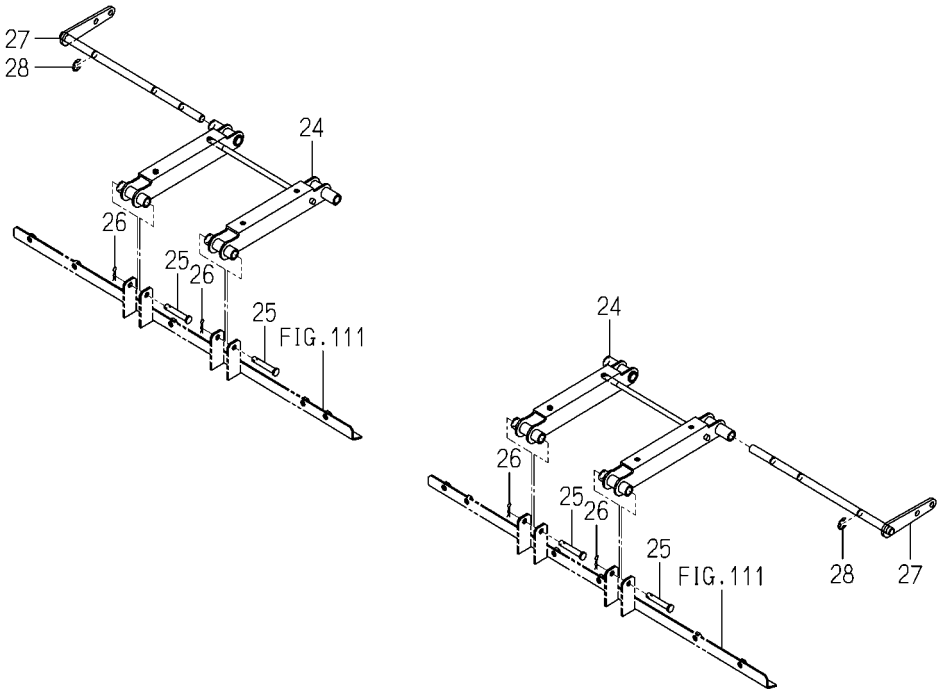

2213-583K-0100

KEY	PART CODE	DESCRIPTION	SPC	TYPE OF MODEL PZ80E16		ITC	COL	GRP	REMARKS
31	V411-260-010-00	WASHER/M10	*	1 101650-					
32	3505-704-003-00	PIN,HAIR (10)	*	1 101650-					
33	2213-583-390-10	ARM(LEVER/ROTAR/8)CO	*	1 101650-					
34	2188-106-001-00	SPRING/HE088	*	1 101650-					
35	3625-151-001-00	WASHER	*	1 101650-					
36	V500-163-002-00	PIN,SPLIT/3 X20	*	1 101650-					
37	2213-583-270-30	REVER/ROTARY/8 COMP	*	1 101650-		1			
38	3659-215-003-00	GRIP/11X60	*	1 101650-					
39	2157-419-005-00	PIN/05X28	*	1 101650-					
40	V500-161-601-50	PIN,SPLIT/1.6X15	*	1 101650-					
41	2163-870-013-00	SPRING/HE076	*	1 101650-					
42	2204-583-005-00	GUIDE(ROTARY)	*	1 101650-					
43	V211-360-801-60	BOLT,SEMS (SP)	*	2 101650-					

FIG.113 LEVER(1/2) (DEPTH/ROTOR)SYSTEM(NO.100001-101649)

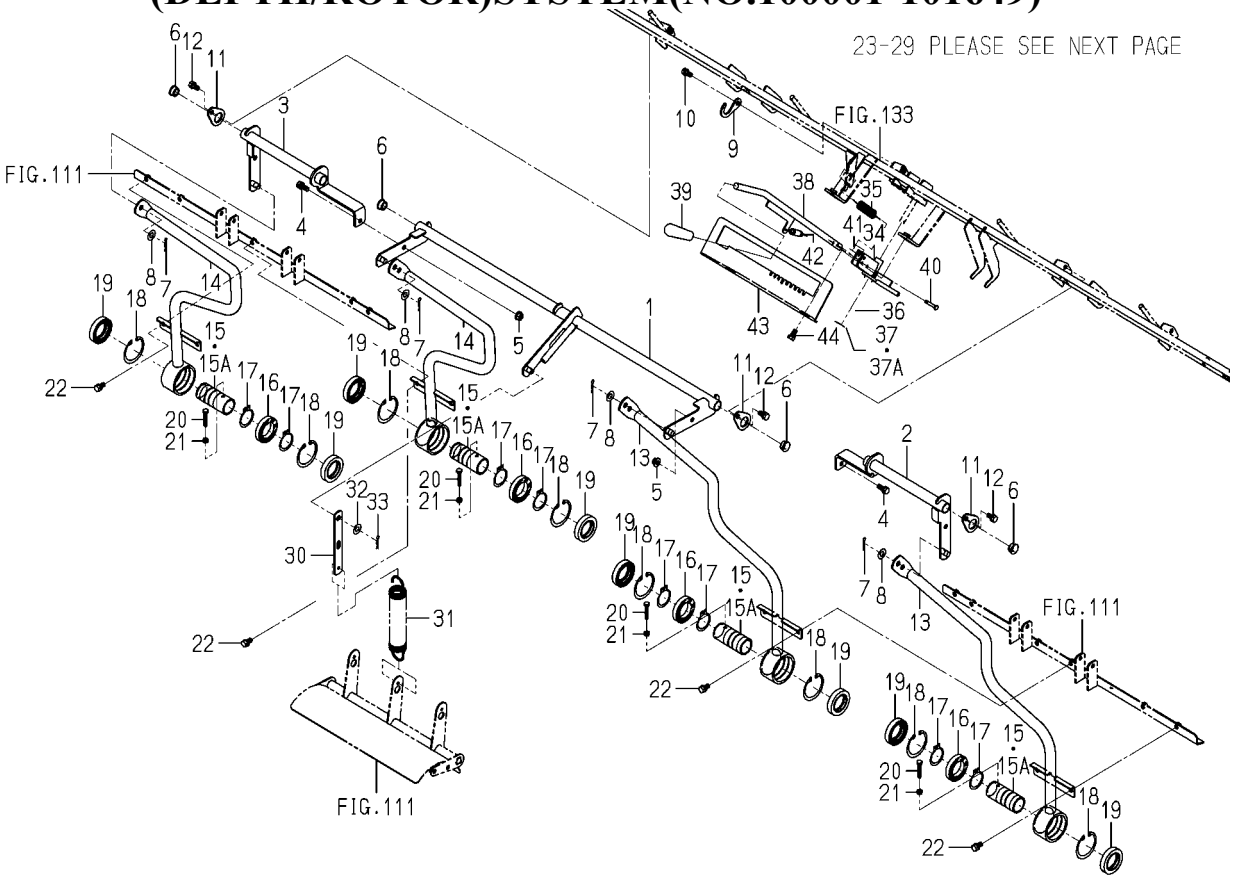

2213-583N-0100

KEY	PART CODE	DESCRIPTION	SPC	TYPE OF MODEL PZ80E16		ITC	COL	GRP	REMARKS
1	2213-583-200-10	FRAME/ROTARY/8 COMP	*	1 -101649					
2	2213-583-240-00	FRAME/ROTARY/LH COMP	*	1 -101649					
3	2213-583-250-00	FRAME/ROTARY/RH COMP	*	1 -101649					
4	V211-260-802-00	BOLT/S	*	2 -101649					
5	V362-260-008-00	NUT/WASHER	*	2 -101649					
6	3526-704-001-00	CAP	*	6 -101649					
7	3505-704-003-00	PIN,HAIR (10)	*	4 -101649					
8	V411-260-010-00	WASHER/M10	*	4 -101649					
9	2213-583-012-00	HOLDER/ROTARY/CENTER	*	1 -101649					
10	V211-260-801-60	BOLT,SEMS (S) M8X16	*	1 -101649					
11	2213-583-011-00	HOLDER/ROTARY/8	*	3 -101649					
12	V211-260-801-60	BOLT,SEMS (S) M8X16	*	3 -101649					
13	2213-583-210-10	HOLDER/8/LH COMP	*	2 -101649					
14	2213-583-300-10	HOLDER/8/RH COMP	*	2 -101649					
15	2204-582-001-00	HUB/29X35X80	*	4 -101091					
15A	2213-582-001-00	HUB/29X35X80/8L	*	4 -101649					
16	V600-110-690-70	BEARING	*	4 -101649					
17	V704-140-035-00	RING,SNAP/35 C	*	8 -101649					
18	V707-140-055-00	RING/SNAP	*	8 -101649					
19	2144-310-006-00	SEAL,OIL	*	8 -101649					
20	V200-360-603-50	BOLT	*	4 -101649					
21	V301-260-006-00	NUT/M6	*	4 -101649					
22	V211-260-801-60	BOLT,SEMS (S) M8X16	*	8 -101649					
23	2213-583-220-20	ARM/ROTARY COMP	*	2 -101649		1			
24	1380-401-001-00	PIN/75	*	4 -101649					
25	7957-405-003-00	PIN/HAIR	*	4 -101649					
26	2213-583-310-10	BRACKET/ROTARY COMP	*	2 -101649					
27	V211-260-802-00	BOLT/S	*	4 -101046					
28	V363-260-008-00	NUT/WASHER	*	4 -101046					
29	V710-140-010-00	RING,SNAP/E10	*	6 -101649					

FIG.113 LEVER(2/2)
(DEPTH/ROTOR)SYSTEM(NO.100001-101649)

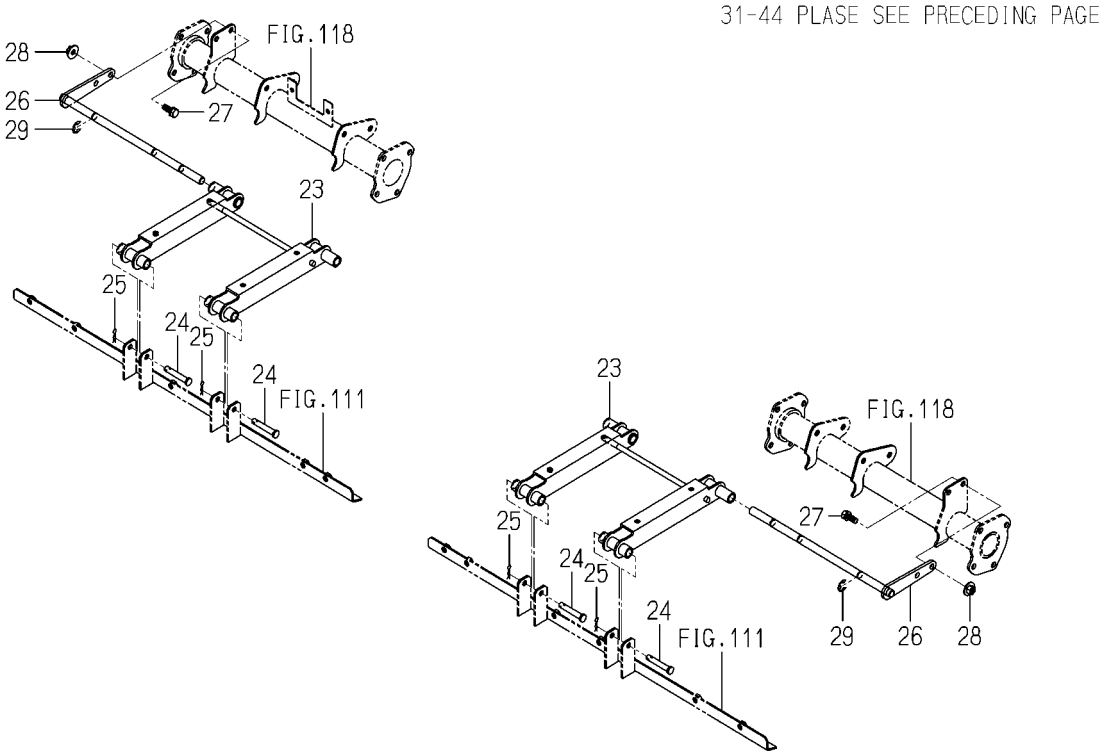

2213-583N-0100

KEY	PART CODE	DESCRIPTION	SPC	TYPE OF MODEL PZ80E16		ITC	COL	GRP	REMARKS
30	2213-583-001-00	STAY/ROTOR/SPRING/8	*	1 -101649					
31	2204-583-015-00	SPRING/HE200	*	1 -101649					
32	V411-260-010-00	WASHER/M10	*	1 -101649					
33	3505-704-003-00	PIN,HAIR (10)	*	1 -101649					
34	2213-583-390-00	ARM/LEVER/ROTOR/8	*	1 -101649					
35	2188-106-001-00	SPRING/HE088	*	1 -101649					
36	3625-151-001-00	WASHER	*	1 -101649					
37	7957-405-003-00	PIN/HAIR	*	1 -101046					
37A	V500-163-002-00	PIN,SPLIT/3 X20	*	1 -101649					
38	2213-583-270-00	REVER/ROTARY/8 COMP	*	1 -101649					
39	3659-215-003-00	GRIP/11X60	*	1 -101649					
40	2157-419-005-00	PIN/05X28	*	1 -101649					
41	V500-161-601-50	PIN,SPLIT/1.6X15	*	1 -101649					
42	2163-870-013-00	SPRING/HE076	*	1 -101649					
43	2204-583-005-00	GUIDE(ROTARY)	*	1 -101649					
44	V211-360-801-60	BOLT,SEMS (SP)	*	2 -101649					

FIG.114 CASE(CHAIN)SYSTEM

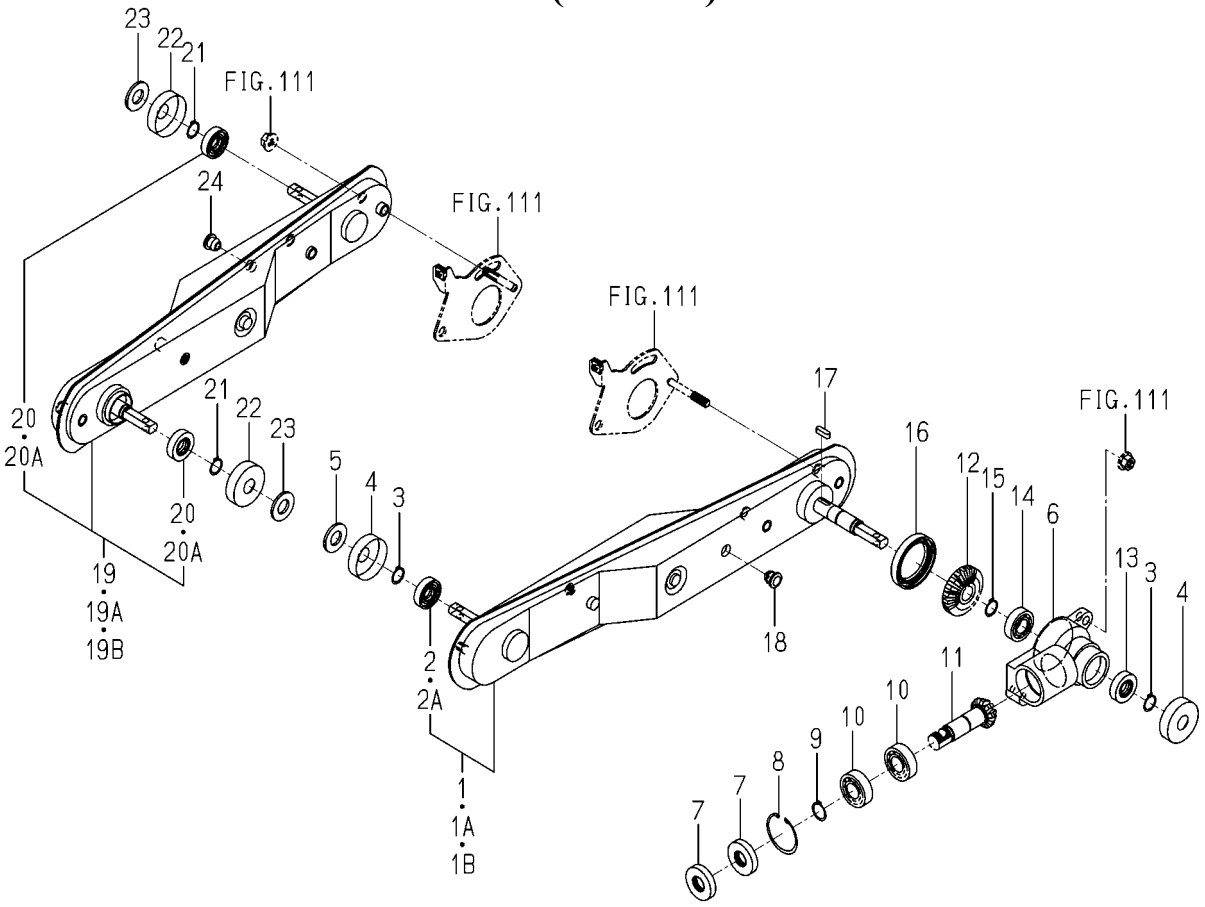

2213-589N-0100

KEY	PART CODE	DESCRIPTION	SPC	TYPE OF MODEL PZ80E16		ITC	COL	GRP	REMARKS
1	2204-589-300-20	CASE/CHAIN/LH ASSY	*	1 -101744			6G		
1A	2204-589-300-30	CASE/CHAIN/LH ASSY	*	1 -102197		1	6G		
1B	2213-589-200-00	CASE/CHAIN/8/LH ASSY	*	1 102198-			6G		
2	2130-736-202-00	SEAL,PLANTING ARM	*	1 -102197					
2A	2130-736-202-00	SEAL,PLANTING ARM	*	1 102198-					
3	V704-140-015-00	RING,SNAP/15 C	*	2					
4	2204-582-009-00	COVER	*	2			6G		
5	V411-260-014-00	WASHER,PL/M14	*	1					
6	2204-589-004-10	CASE,ROTER/INCOME	*	1					
7	V744-117-350-70	SEAL/OIL	*	2					
8	V705-140-035-00	RING,CIRCLIP	*	1					
9	V704-140-017-00	RING,SNAP/17 C	*	1					
10	V600-110-600-30	BEARING,RB/6003	*	2					
11	2204-589-002-00	GEAR,BEVEL/10	*	1					
12	2204-589-003-00	GEAR,BEVEL/20	*	1					
13	2130-736-202-00	SEAL,PLANTING ARM	*	1					
14	V600-110-600-20	BEARING,RB/6002	*	1					
15	V704-140-015-00	RING,SNAP/15 C	*	1					
16	V744-140-550-80	SEAL,OIL/TC40558	*	1					
17	3750-251-023-00	KEY,DRIVE SHAFT	*	1					
18	2186-738-038-20	CAP/10	*	1					
19	2204-589-320-20	CASE/CHAIN/RH ASSY	*	1 -101744			6G		
19A	2204-589-320-30	CASE/CHAIN/RH ASSY	*	1 -102197		1	6G		
19B	2213-589-250-00	CASE/CHAIN/8/RH ASSY	*	1 102198-			6G		
20	2130-736-202-00	SEAL,PLANTING ARM	*	2 -102197					
20A	2130-736-202-00	SEAL,PLANTING ARM	*	2 102198-					
21	V704-140-015-00	RING,SNAP/15 C	*	2					
22	2204-582-009-00	COVER	*	2			6G		
23	V411-260-014-00	WASHER,PL/M14	*	2					
24	2186-738-038-20	CAP/10	*	1					

FIG.115 HANDRAIL SYSTEM(F TYPE)

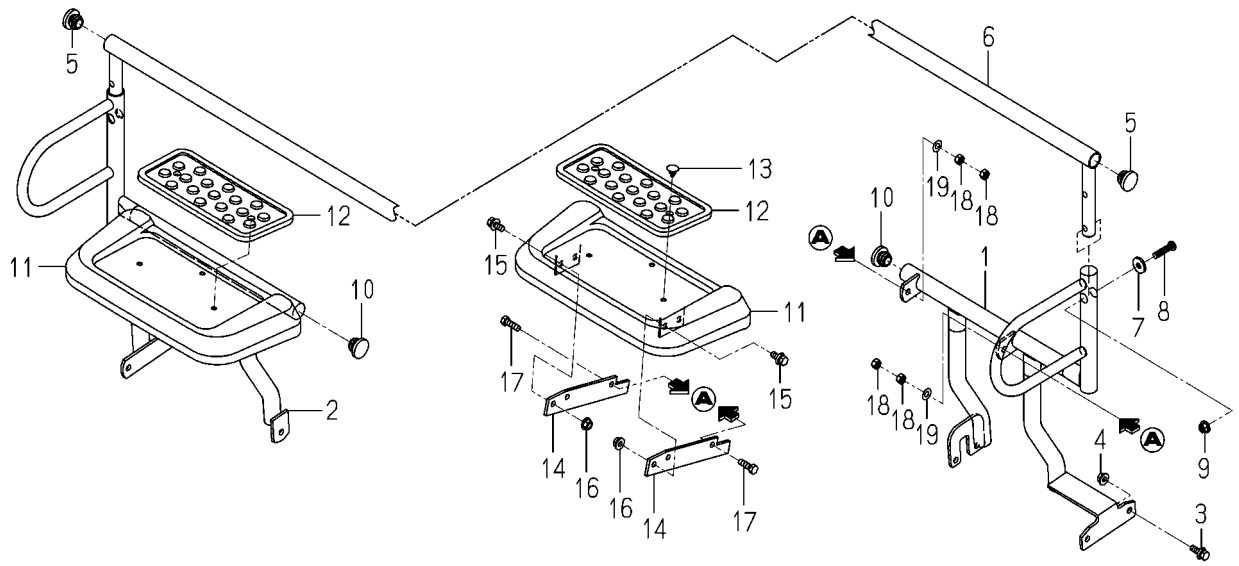

2213-590J-0100

KEY	PART CODE	DESCRIPTION	SPC	TYPE OF MODEL PZ80E16		ITC	COL	GRP	REMARKS
1	2213-590-200-30	FRAME/HANDRAIL/PZ/LH	*	1					
2	2213-590-210-10	FRAME/HANDRAIL/PZ/RH	*	1					
3	V211-360-802-00	BOLT/SP	*	4					
4	V362-260-008-00	NUT/WASHER	*	4					
5	1422-181-024-00	CAP	*	2					
6	2162-513-310-01	TUBE/FRAME	*	1			6G		
7	2130-407-003-00	WASHER	*	2					
8	V111-168-003-00	SCREW/M8X30	*	2					
9	V362-260-008-00	NUT/WASHER	*	2					
10	1422-181-024-00	CAP	*	2					
11	2157-510-710-10	REAR STEP	*	2			6G		
12	2157-510-071-10	MAT,REAR STEP	*	2					
13	1566-705-006-00	CAP/08	*	4					
14	2190-590-001-00	PLATE,SUB STEP	*	4					
15	V211-360-802-00	BOLT/SP	*	8					
16	V362-260-008-00	NUT/WASHER	*	8					
17	V201-260-802-50	BOLT/M 8X25	*	4					
18	V304-260-008-00	NUT	*	8					
19	V411-260-008-00	WASHER,PL/M 8	*	4					

FIG.116 HANDRAIL SYSTEM(EXCEPT F TYPE)

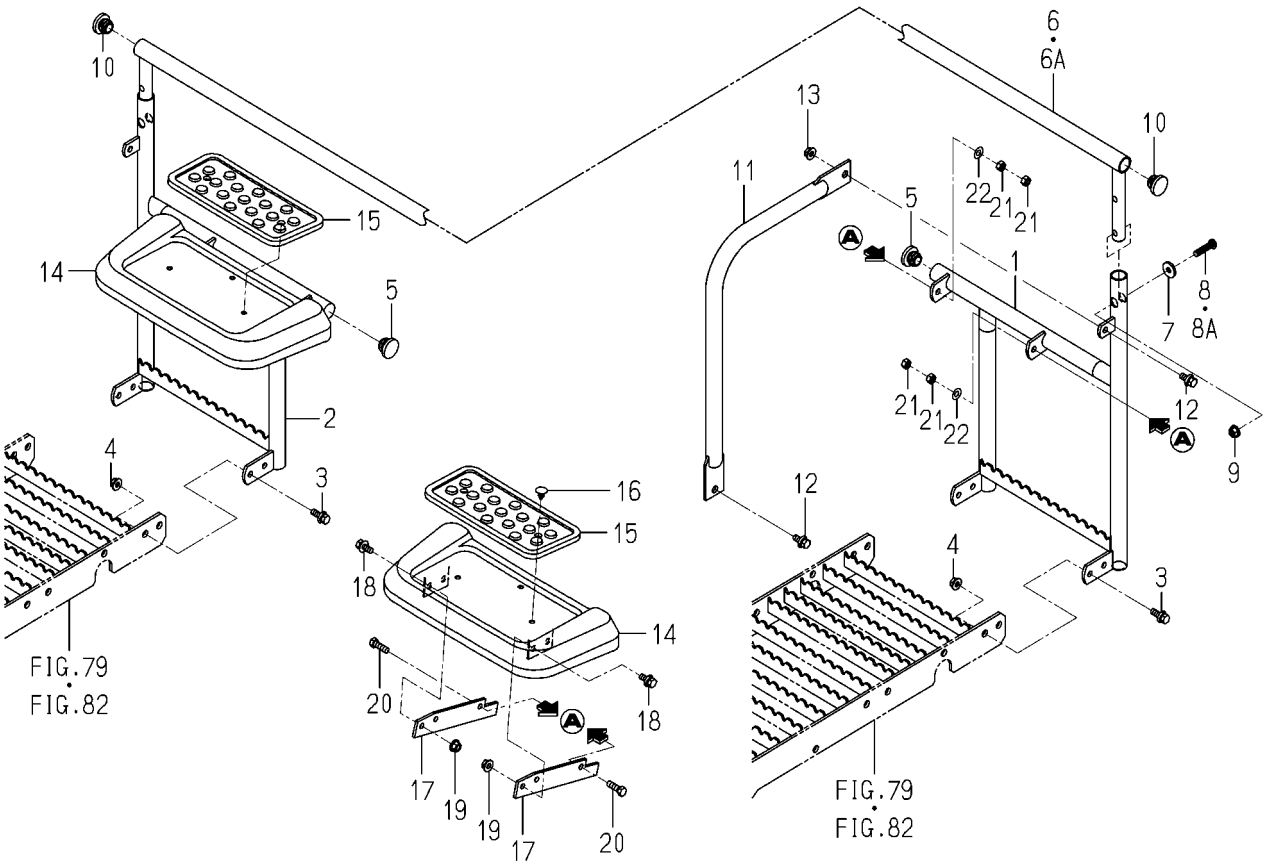

2213-590K-0100

KEY	PART CODE	DESCRIPTION	SPC	TYPE OF MODEL PZ80E16		ITC	COL	GRP	REMARKS
1	2213-590-270-00	FRAME/HANDRAIL/E16/L	*	1			6G		
2	2213-590-280-00	FRAME/HANDRAIL/E16/R	*	1			6G		
3	V211-360-802-00	BOLT/SP	*	4					
4	V362-260-008-00	NUT/WASHER	*	4					
5	1422-181-024-00	CAP	*	2					
6	2213-590-260-10	TUBE/HANDRAIL COMP	*	1 -102349			6G		
6A	2213-590-260-20	TUBE/HANDRAIL COMP	*	1 102350-		1	6G		
7	2130-407-003-00	WASHER	*	2					
8	V111-168-003-00	SCREW/M8X30	*	2 -102399					
8A	V111-168-003-50	SCREW/M8X35	*	2 102400-					
9	V362-260-008-00	NUT/WASHER	*	2					
10	2186-320-001-00	CAP	*	2					
11	2213-590-002-00	TUBE/STAY	*	2					
12	V211-360-802-00	BOLT/SP	*	4					
13	V362-260-008-00	NUT/WASHER	*	4					
14	2157-510-710-10	REAR STEP	*	2			6G		
15	2157-510-071-10	MAT,REAR STEP	*	2					
16	1566-705-006-00	CAP/08	*	4					
17	2190-590-001-00	PLATE,SUB STEP	*	4					
18	V211-360-802-00	BOLT/SP	*	8					
19	V362-260-008-00	NUT/WASHER	*	8					
20	V201-260-802-50	BOLT/M 8X25	*	4					
21	V304-260-008-00	NUT	*	8					
22	V411-260-008-00	WASHER,PL/M 8	*	4					

FIG.117 LIFT SYSTEM

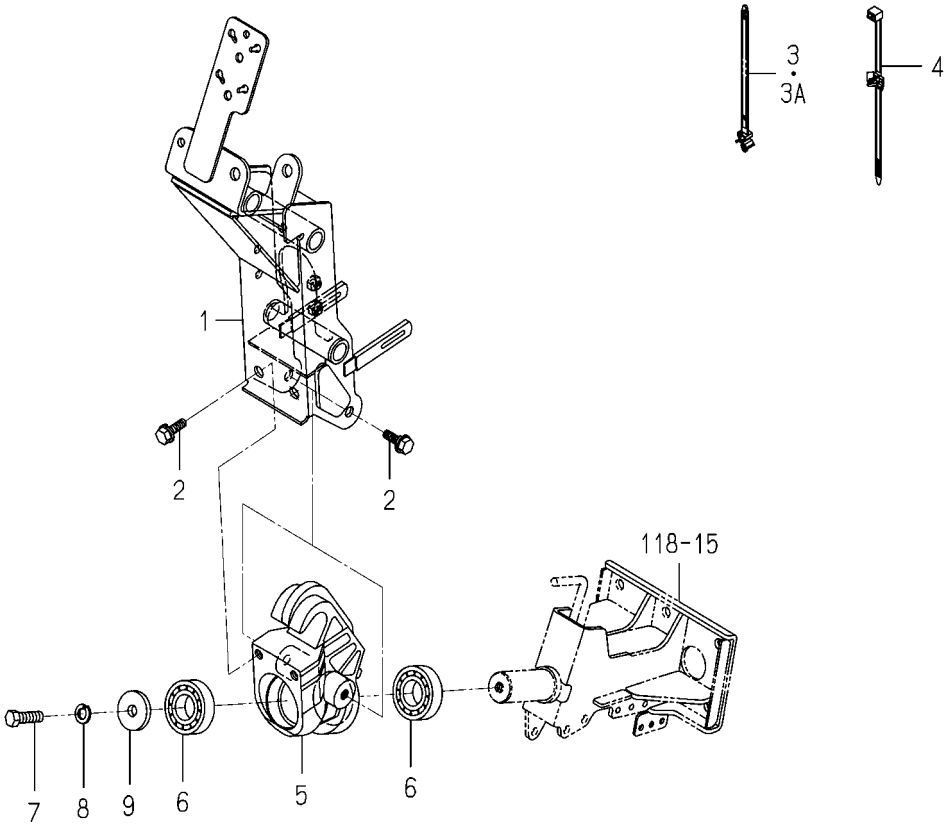

2213-601 -0100

KEY	PART CODE	DESCRIPTION	SPC	TYPE OF MODEL PZ80E16		ITC	COL	GRP	REMARKS
1	2213-601-300-20	LIFT/8 COMP	*	1					
2	2194-338-003-20	BOLT/M10X25	*	4					
3	2204-537-002-00	BAND	*	3 -101046					
3A	2204-537-002-00	BAND	*	2 101047-					
4	1560-666-004-00	BAND	*	1 101047-					
5	2213-601-003-00	HUB/ROLLING/PZ8	*	1					
6	V600-150-600-60	BEARING,RB/6006SS	*	2					
7	V201-361-003-00	BOLT/M10X30	*	1					
8	V401-160-010-00	WASHER,SP/M10	*	1					
9	2142-101-005-00	WASHER	*	1					

FIG.118 FRAME(PLANTING)SYSTEM

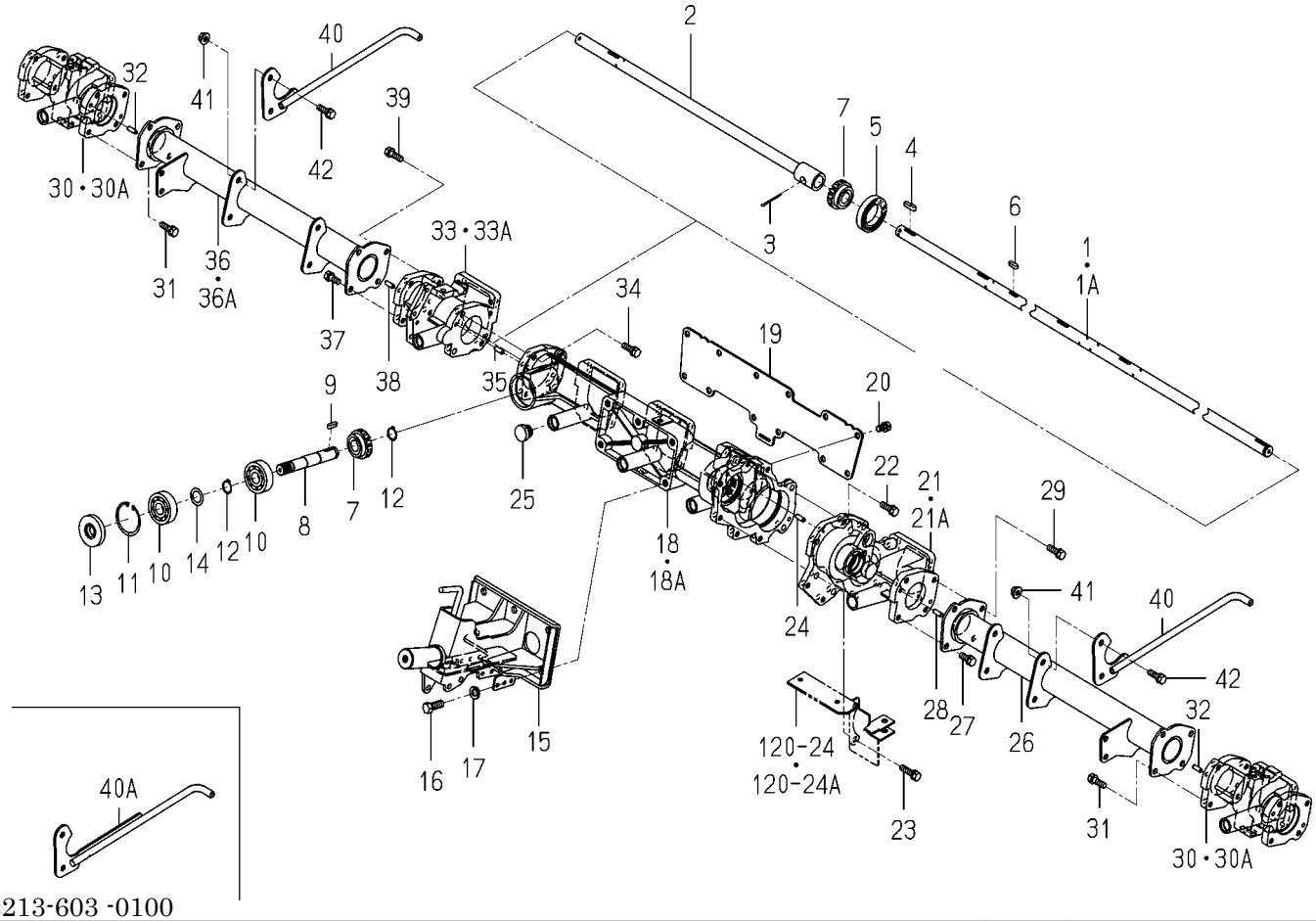

2213-603 -0100

KEY	PART CODE	DESCRIPTION	SPC	TYPE OF MODEL PZ80E16		ITC	COL	GRP	REMARKS
1	2213-603-001-00	SHAFT/DRIVE/8	*	1 -100851					
1A	2213-603-001-10	SHAFT/DRIVE/8	*	1 100852-		3			
2	2213-603-320-00	SHAFT/DRIVE/8R COMP	*	1					
3	V500-163-003-50	PIN,SPLIT/3 X35	*	1					
4	2204-701-025-10	KEY/05X05X23	*	1					
5	V600-110-690-70	BEARING	*	1					
6	3750-251-023-00	KEY,DRIVE SHAFT	*	1					
7	2144-604-002-10	GEAR,BEVEL/15T	*	2					
8	2213-604-001-00	SHAFT/INPUT/PZ8	*	1					
9	3750-251-023-00	KEY,DRIVE SHAFT	*	1					
10	V600-110-630-30	BEARING,RB/6303	*	2					
11	V705-140-047-00	RING,SNAP/47 C	*	1					
12	V704-140-017-00	RING,SNAP/17 C	*	2					
13	V744-117-470-80	SEAL,OIL/TC17478	*	1					
14	3505-604-002-00	SHIM,TIMING GEAR	*	1					
15	2213-603-200-10	BRACKET/ROLLING/8	*	1					
16	V201-361-002-5B	BOLT/SEAL	*	5					
17	V401-160-010-00	WASHER,SP/M10	*	5					
18	2213-603-011-10	CASE/TRANSPLANT/CENT	*	1 -102084					
18A	2213-603-011-20	CASE/TRANSPLANT/CENT	*	1 102085-		1			
19	2213-603-017-10	COVER/TRANSPLANT/FRA	*	1					
20	V211-260-801-60	BOLT,SEMS (S) M8X16	*	12					
21	2213-603-012-20	CASE/UETUKE/LH	*	1 -102084					
21A	2213-603-012-40	CASE/UETUKE/LH	*	1 102085-		1			
22	V211-260-802-50	BOLT/S	*	6					
23	V211-260-803-00	BOLT,SEMS	*	2					
24	V522-100-601-60	PIN	*	2					
25	2161-603-006-00	PLUG,OIL 18/BRACK	*	3					
26	2213-603-240-00	FRAME/SIDE/8/LH COMP	*	1					
27	V211-260-802-00	BOLT/S	*	2					

FIG.118 FRAME(PLANTING)SYSTEM

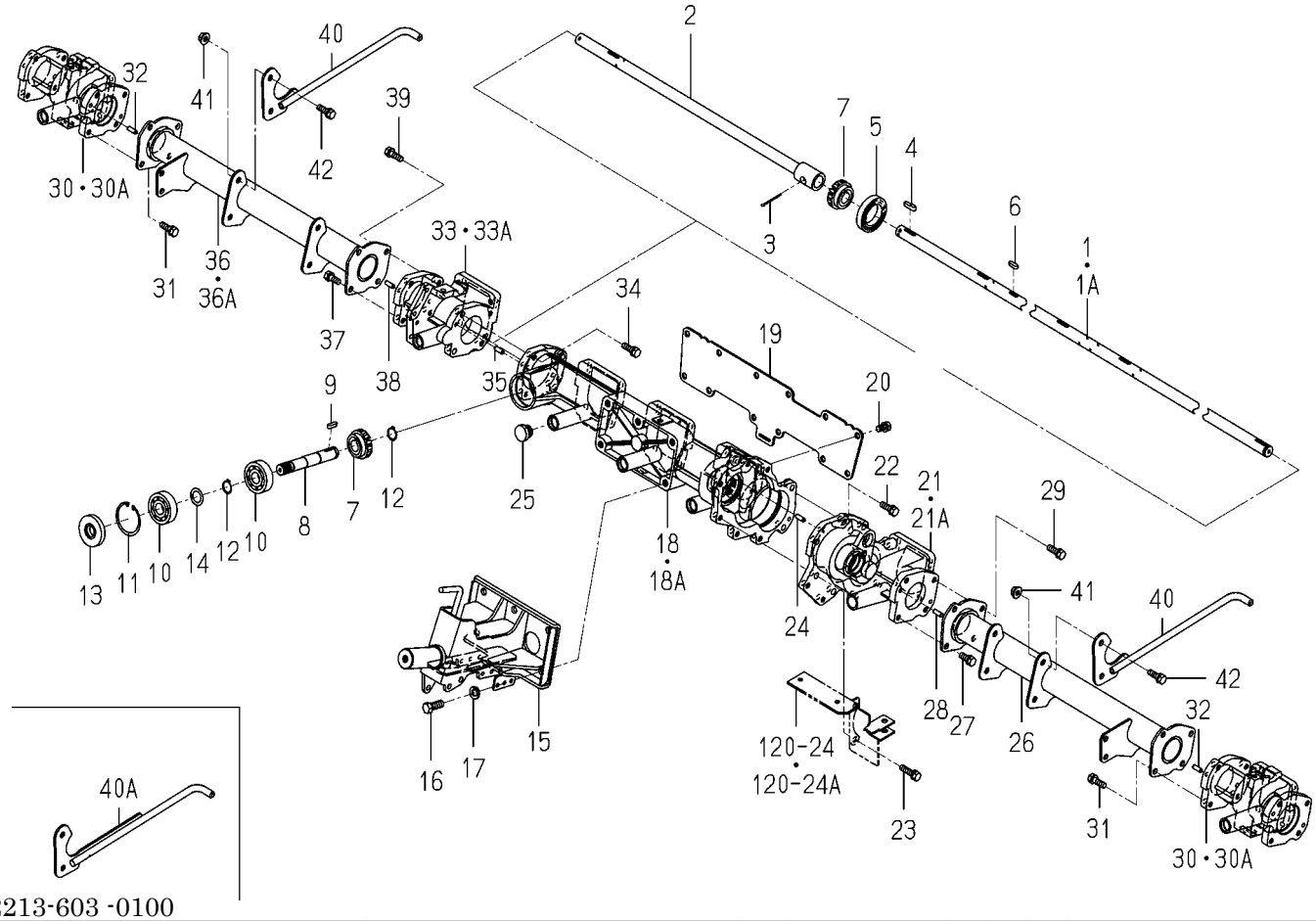

2213-603 -0100

KEY	PART CODE	DESCRIPTION	SPC	TYPE OF MODEL PZ80E16		ITC	COL	GRP	REMARKS
28	V522-100-601-60	PIN	*	2					
29	V211-260-802-50	BOLT/S	*	2					
30	2204-603-013-10	CASE/TRANSPLANT/SIDE	*	2 -102084					
30A	2204-603-013-20	CASE/TRANSPLANT/SIDE	*	2 102085-		1			
31	V211-260-802-50	BOLT/S	*	8					
32	V522-100-601-60	PIN	*	4					
33	2213-603-013-10	CASE/UETUKE/SIDE	*	1 -102084					
33A	2213-603-013-20	CASE/UETUKE/SIDE	*	1 102085-		1			
34	V211-260-802-50	BOLT/S	*	4					
35	V522-100-601-60	PIN	*	2					
36	2213-603-250-00	FRAME/SIDE/8/RH COMP	*	1 -101649					
36A	2213-603-250-10	FRAME/SIDE/8/RH COMP	*	1 101650-		1			
37	V211-260-802-00	BOLT/S	*	4					
38	V522-100-601-60	PIN	*	2					
39	V211-260-802-50	BOLT/S	*	2					
40	2213-603-350-00	FLOAT STOPPER/CENTER	*	2 -102399					
40A	2213-603-350-10	FLOAT STOPPER/CENTER	*	2 102400-		1			
41	V362-260-008-00	NUT/WASHER	*	4					
42	V211-260-802-50	BOLT/S	*	4					

FIG.119 LINK(FLOAT)SYSTEM

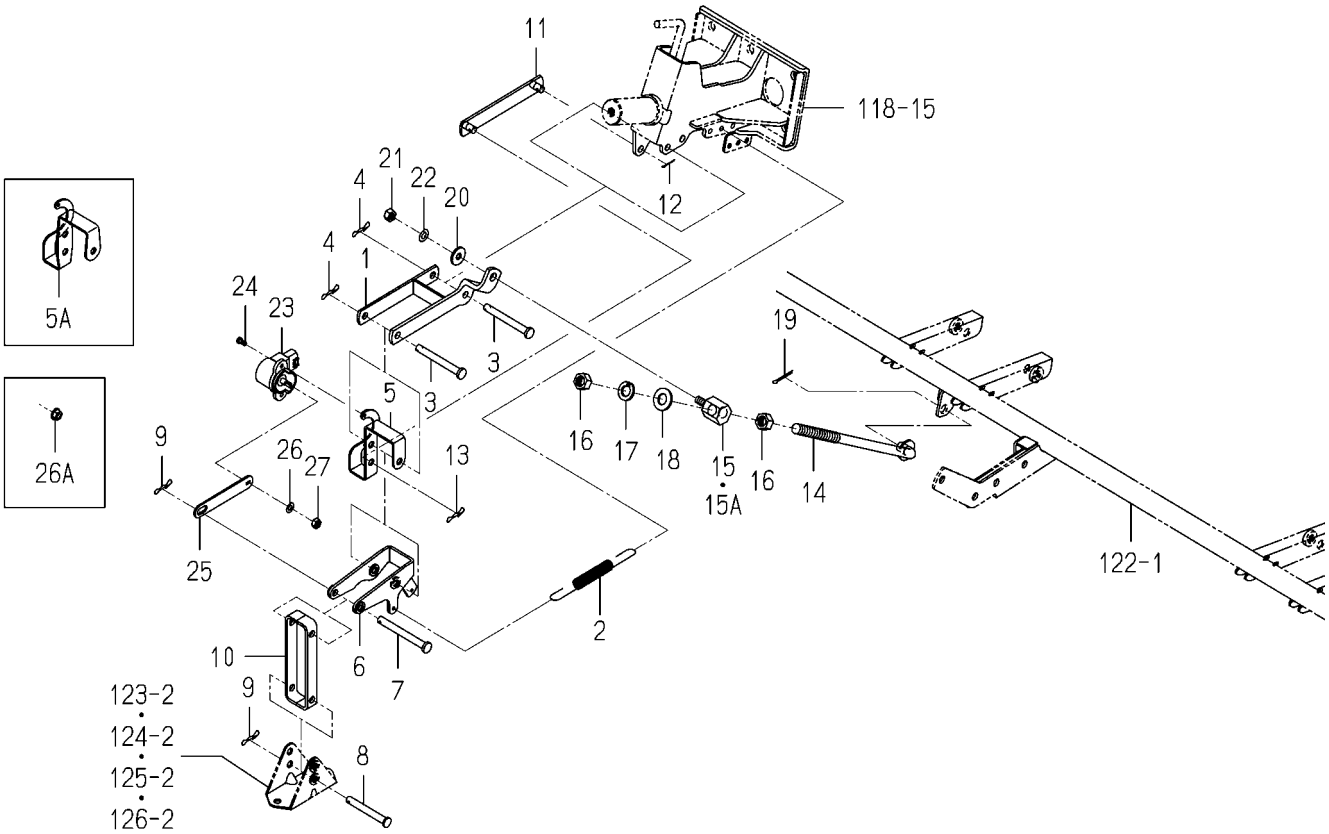

2213-605N-0100

KEY	PART CODE	DESCRIPTION	SPC	TYPE OF MODEL PZ80E16		ITC	COL	GRP	REMARKS
1	2204-605-210-30	STAY	*	1					
2	2204-605-007-00	SPRING/HE138	*	1					
3	3610-201-005-00	PIN	*	2					
4	2161-735-006-00	PIN	*	2					
5	2204-605-009-10	PLATE,LINK/SENSOR	*	1 -102200					
5A	2204-605-009-20	PLATE/LINK/SENSOR	*	1 102201-		1			
6	2213-605-200-00	ARM/FLOATSENSE/ COMP	*	1					
7	2137-330-004-00	PIN,FLOAT	*	1					
8	2110-441-007-10	PIN,CHANGE LEVER	*	1					
9	2161-735-006-00	PIN	*	2					
10	2213-605-300-00	PLATE/FLOAT LINK/8	*	1					
11	2204-605-220-10	PLATE,LINK	*	1					
12	V500-162-501-50	PIN,SPLIT/2.5X15	*	1					
13	2161-735-006-00	PIN	*	1					
14	2204-605-200-00	ROD	*	1					
15	2161-615-006-00	JOINT,ADJUST/FLOAT	*	1 -101832					
15A	2204-605-018-00	JOINT/FLOAT/E	*	1 101833-					
16	V304-260-012-00	NUT/M12	*	2					
17	V401-160-012-00	WASHER,SP/M12	*	1					
18	V411-260-012-00	WASHER /M12	*	1					
19	V500-163-002-00	PIN,SPLIT/3 X20	*	1 100001-					
20	2144-735-006-00	WASHER	*	1					
21	V304-260-008-00	NUT	*	1					
22	V401-160-008-00	WASHER,SP/M 8	*	1					
23	1729-662-340-00	SENSOR/ANGLE/110/R	*	1					
24	V120-364-001-00	SCREW/SP	*	2					
25	2204-605-003-00	PLATE/FLOAT/SENSOR	*	1					
26	V401-160-006-00	WASHER,SP/M 6	*	1 -101649					
26A	V360-260-006-00	NUT/M6	*	1 101650-					
27	V301-260-006-00	NUT/M6	*	1 -101649					

FIG.120 SLIDE SYSTEM

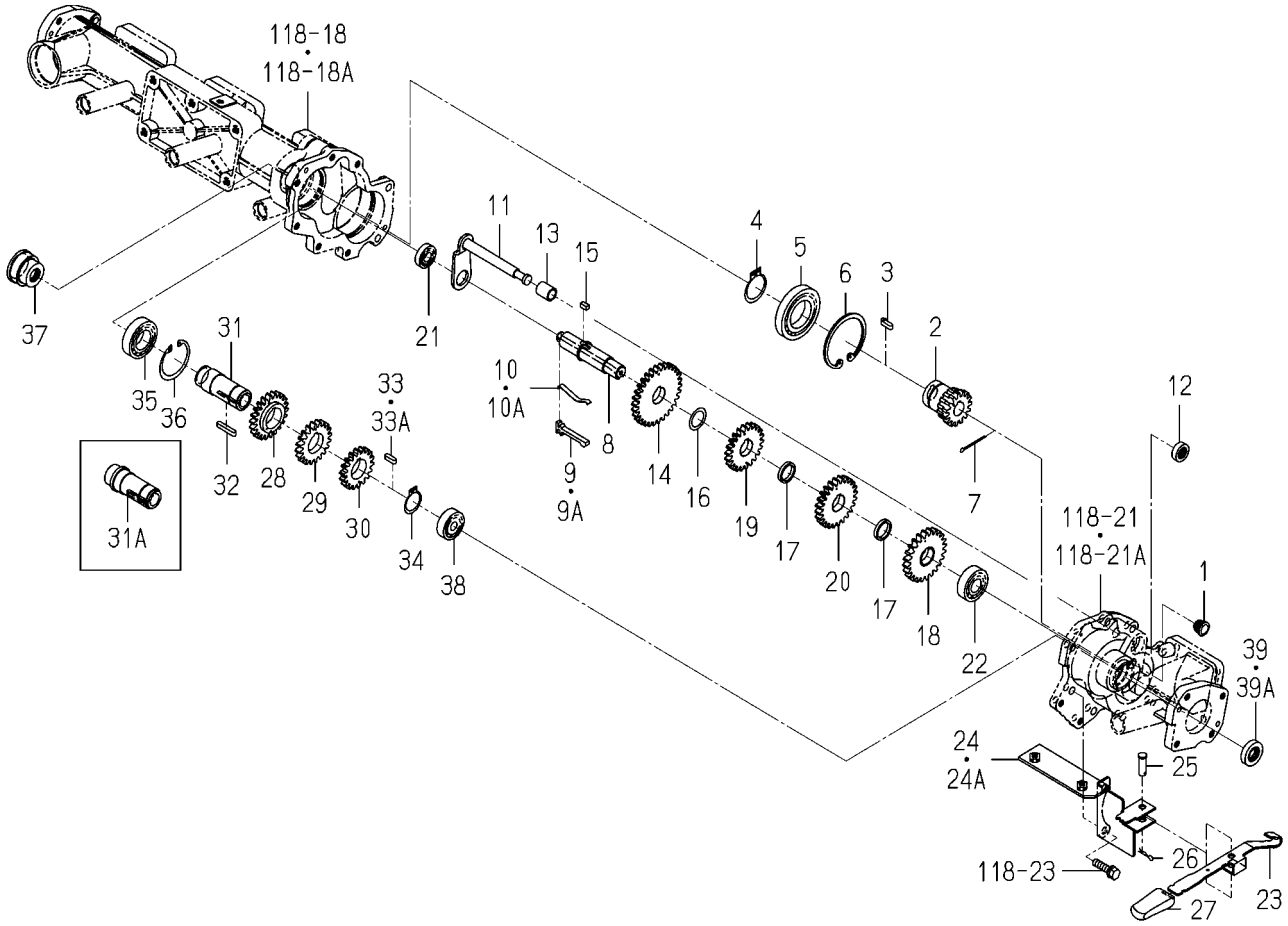

2213-607 -0100

KEY	PART CODE	DESCRIPTION	SPC	TYPE OF MODEL PZ80E16		ITC	COL	GRP	REMARKS
1	2142-736-236-00	PLUG	*	1					
2	2204-607-003-10	GEAR,SPUR/15	*	1					
3	2204-701-025-10	KEY/05X05X23	*	1					
4	V704-140-032-00	RING,SNAP/32 C	*	1					
5	1524-221-003-00	BEARING,RB/62132	*	1					
6	2204-607-021-00	RING,STOP	*	1					
7	8841-701-062-00	PIN,COTTER/3X25/SUS	*	1					
8	2213-607-035-00	SHAFT/SEND/8	*	1					
9	2213-607-041-00	KNOCK/SEND/PZ8	*	1 -101687					
9A	2213-607-041-10	KNOCK/SEND/PZ8	*	1 101688-		1			
10	2213-607-042-00	SPRING/SEND/PZ8	*	1 -101747					
10A	2213-607-042-20	SPRING/SEND/PZ8	*	1 101748-		1			
11	2213-607-210-00	SHIFTER/SEND/PZ8	*	1					
12	V744-112-220-70	SEAL,OIL TC122207	*	1					
13	2204-607-032-00	COLLAR/12X16X19	*	1					
14	2213-607-036-00	GEAR/SPUR/30/PZ8	*	1					
15	2186-421-031-00	KEY/5X5X10	*	1					
16	2110-325-003-00	SHIM,SAFETY CLUTCH	*	1					
17	2213-607-039-00	COLLAR/20X25X04	*	2					
18	2213-607-031-00	GEAR/SPUR/24/18TIMES	*	1					
19	2213-607-037-00	GEAR/SPUR/22/24TIMES	*	1					
20	2213-607-038-00	GEAR/SPUR/24/20TIMES	*	1					
21	V600-110-600-10	BEARING,RB/6001	*	1					
22	V600-110-620-30	BEARING,RB/6203	*	1					
23	2213-607-001-00	LEVER/SEND/PZ8	*	1					
24	2213-607-230-10	PLATE/STAY/SEND COMP	*	1 -101687					
24A	2213-607-230-20	PLATE/STAY/SEND COMP	*	1 101688-		1			
25	2144-337-002-00	PIN/08X25	*	1					
26	3908-170-020-00	PIN/SNAP/08	*	1					
27	2145-751-004-00	GRIP	*	1					

FIG.120 SLIDE SYSTEM

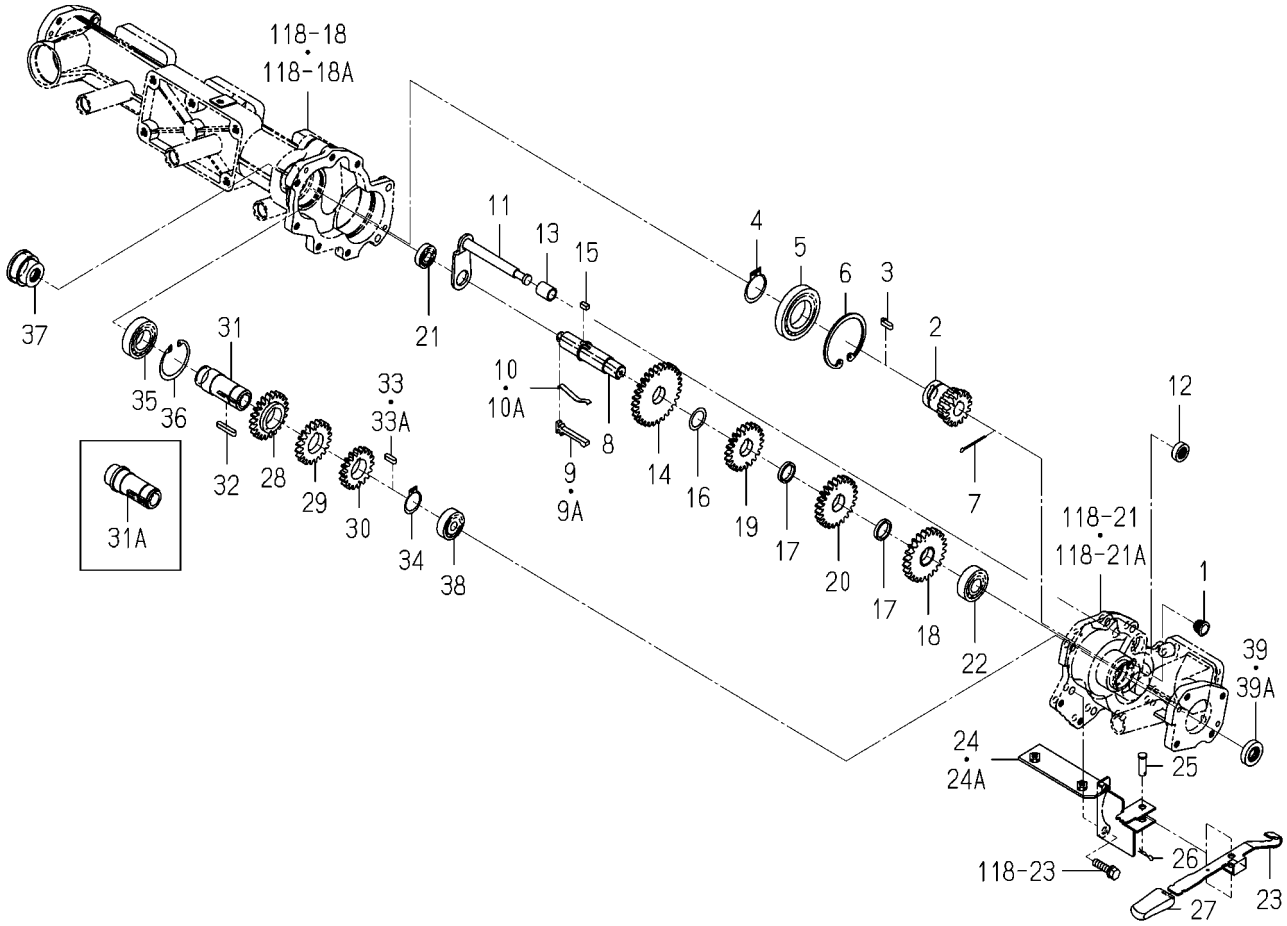

2213-607 -0100

KEY	PART CODE	DESCRIPTION	SPC	TYPE OF MODEL PZ80E16		ITC	COL	GRP	REMARKS
28	2213-607-044-00	GEAR/SPUR/22/24TIMES	*	1					
29	2213-607-045-00	GEAR/SPUR/20/20TIMES	*	1					
30	2213-607-032-00	GEAR/SPUR/18/18TIMES	*	1					
31	2213-607-043-10	SLEEVE/CAM/LEAD/8	*	1 -101687					
31A	2213-607-043-20	SLEEVE/CAM/LEAD/8	*	1 101688-		1			
32	1308-230-002-00	KEY	*	1					
33	3750-251-023-00	KEY,DRIVE SHAFT	*	1 -101744					
33A	2204-608-007-00	KEY/05X05X46	*	1 101745-					
34	V704-140-025-00	RING,SNAP/25 C	*	1					
35	V600-150-600-50	BEARING,RB/6005SS	*	1					
36	V705-140-047-00	RING,SNAP/47 C	*	1					
37	2204-607-022-00	SEAL,OIL	*	1					
38	V600-150-620-20	BEARING,RB/6202SS	*	1					
39	V744-115-300-70	SEAL,OIL/TC15307	*	1 -101744					
39A	V744-120-300-70	SEAL,OIL/TC20307	*	1 101745-					

FIG.121 CAM(LEAD)SYSTEM

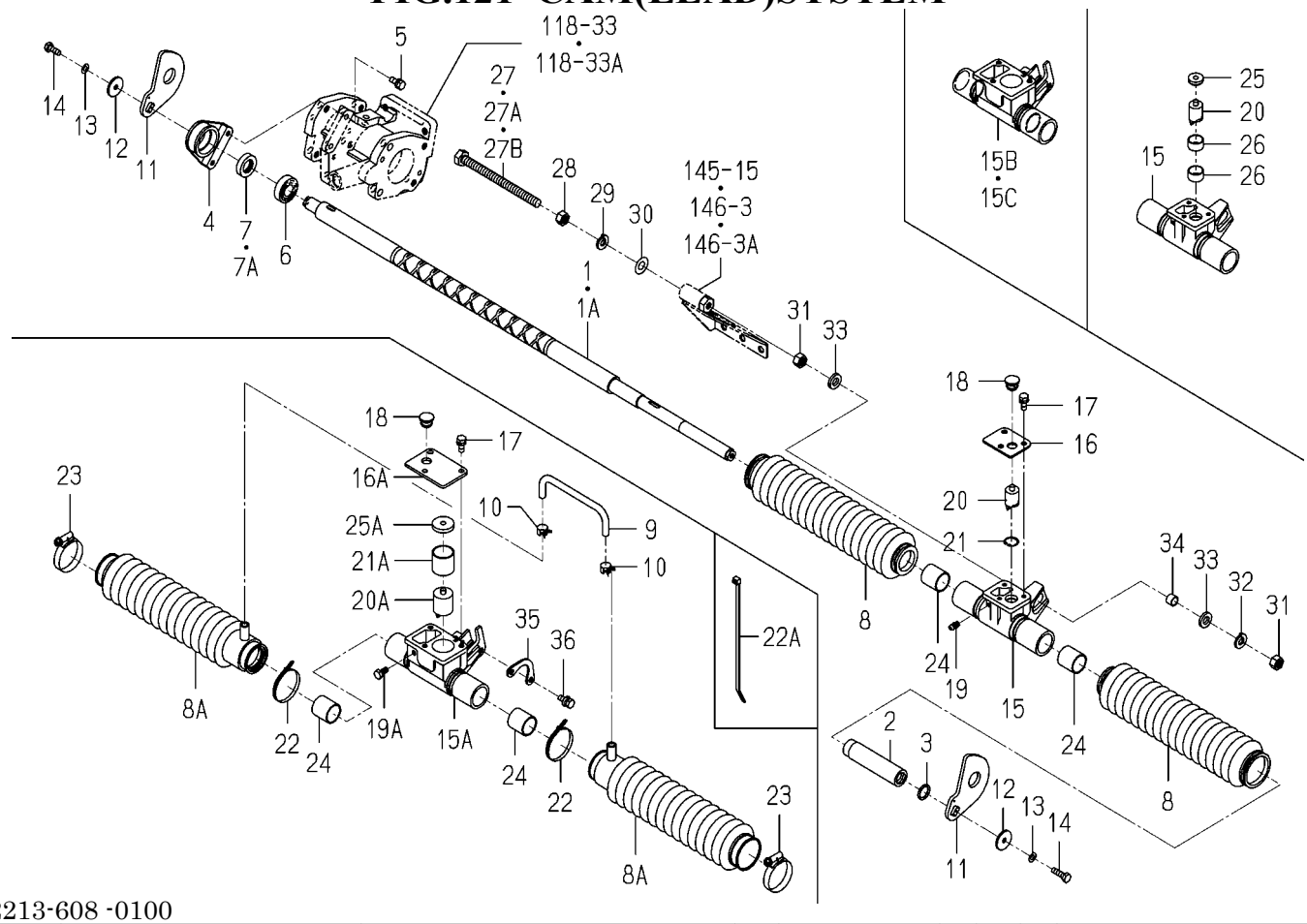

2213-608 -0100

KEY	PART CODE	DESCRIPTION	SPC	TYPE OF MODEL PZ80E16		ITC	COL	GRP	REMARKS
1	2213-608-002-00	CAM/LEAD/PZ8	*	1 -101744					
1A	2213-608-002-10	CAM/LEAD/PZ8	*	1 101745-		1			
2	2213-608-072-00	COLLAR/15X22X91	*	1 101745-					
3	V720-102-401-50	O-RING/P15	*	1 101745-					
4	2188-601-036-10	BEARING/LEED CAM/PP	*	1					
5	V210-260-602-00	BOLT/S	*	2					
6	V600-150-600-20	BEARING,RB/6002SS	*	1					
7	2188-601-039-00	SEAL,OIL/SC152807	*	1 -101936					
7A	2204-608-033-00	OILSEAL/TC152807	*	1 101937-					
8	2137-305-011-20	BOOT	*	2 -101744					
8A	2204-608-016-00	BOOT/LEADCAM/E18	*	2 101745-					
9	2204-608-022-00	PIPE/JOINT/BOOT	*	1 101745-					
10	J062-119-126-00	CLIP/HOSE/11.9-12.6	*	2 101745-					
11	2213-608-006-00	CAM/PZ8/E12	*	2					
12	4131-103-004-00	WASHER/6X25X2.3	*	2					
13	V401-160-006-00	WASHER,SP/M 6	*	2					
14	2180-211-001-00	BOLT/SEAL/M6X16	*	2					
15	2213-608-003-10	METAL/CAM/LEAD/PZ8	*	1 -101936					
15A	2204-608-015-20	METAL/CAM/LEAD/E18	*	1 -102349					
15B	2204-608-015-30	METAL/CAM/LEAD/E18	*	1 -102399		3			
15C	2204-608-015-40	METAL/CAM/LEAD/E18	*	1 102400-		1			
16	2204-608-003-00	PLATE,METAL	*	1 -101744					
16A	2204-608-013-00	PLATE/METAL/LEAD/E18	*	1 101745-					
17	V210-260-601-60	BOLT/S	*	3					
18	2142-736-236-00	PLUG	*	1					
19	V760-150-000-00	NIPPLE,GREASE	*	1 -101744					
19A	2145-762-007-00	BOLT	*	1 -102349					
20	2171-608-003-00	PAWL LEAD	*	1 -101936					
20A	2204-608-012-20	CATCH/LEAD/E18	*	1 101937-					
21	V705-140-017-00	RING,SNAP/17 C	*	1 -101649					

FIG.121 CAM(LEAD)SYSTEM

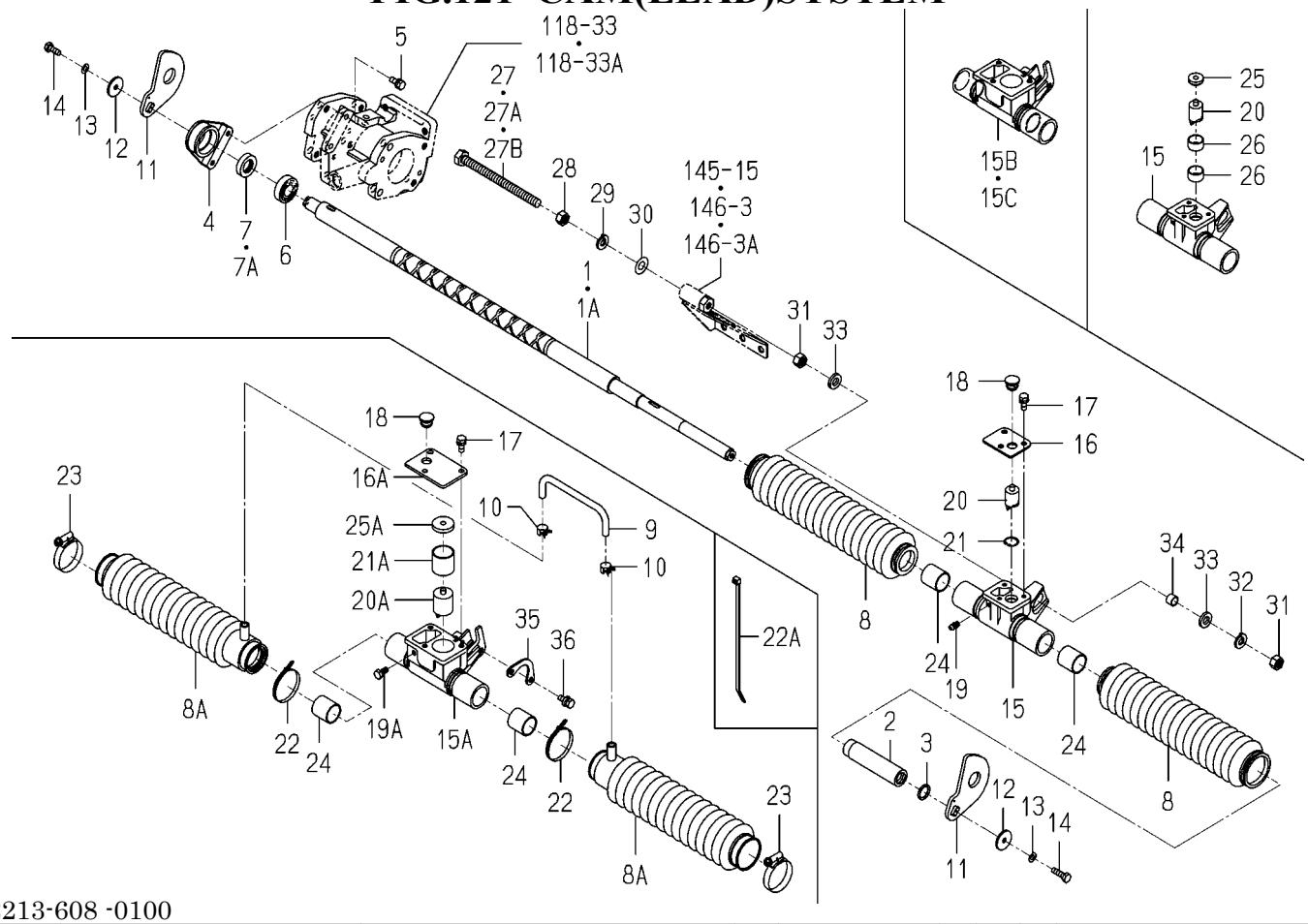

2213-608 -0100

KEY	PART CODE	DESCRIPTION	SPC	TYPE OF MODEL PZ80E16		ITC	COL	GRP	REMARKS
21A	2204-608-027-00	BUSH/24X27X25	*	1 101745-					
22	1342-402-006-00	BAND/WIRE/250	*	4 -101744					
22A	2204-608-006-00	WIREBAND/188	*	2 101745-					
23	J061-132-050-00	CLAMP/WORM/32-50	*	2 101745-					
24	2213-608-007-00	BUSH/22X25X25	*	2					
25	2218-608-004-00	COLLAR/07X19X06	*	1 -101744					
25A	2204-608-028-00	COLLER/07X27X07	*	1 101745-					
26	2218-608-005-00	BUSH/17X19X10	*	2 -101744					
27	2194-608-007-00	BOLT/M10X130	*	1 -101744					
27A	2204-608-021-00	BOLT/M10X130	*	1 -101787					
27B	2204-608-021-10	BOLT/M10X130	*	1 101788-		1			
28	V304-260-010-00	NUT	*	1					
29	V401-160-010-00	WASHER,SP/M10	*	1					
30	V410-260-010-00	WASHER,PL/M10	*	1					
31	V304-260-010-00	NUT	*	2					
32	V401-160-010-00	WASHER,SP/M10	*	1					
33	2149-806-018-00	WASHER/10X19X03	*	2					
34	2194-608-006-00	COLLAR/10X12X09	*	1					
35	2213-608-029-00	PLATE/GUIDE/LEAD	*	1 101745-					
36	V210-360-601-60	BOLT(SP)/M6X16	*	2 101745-					

FIG.122 LEVER(DEPTH/PLANTING)SYSTEM

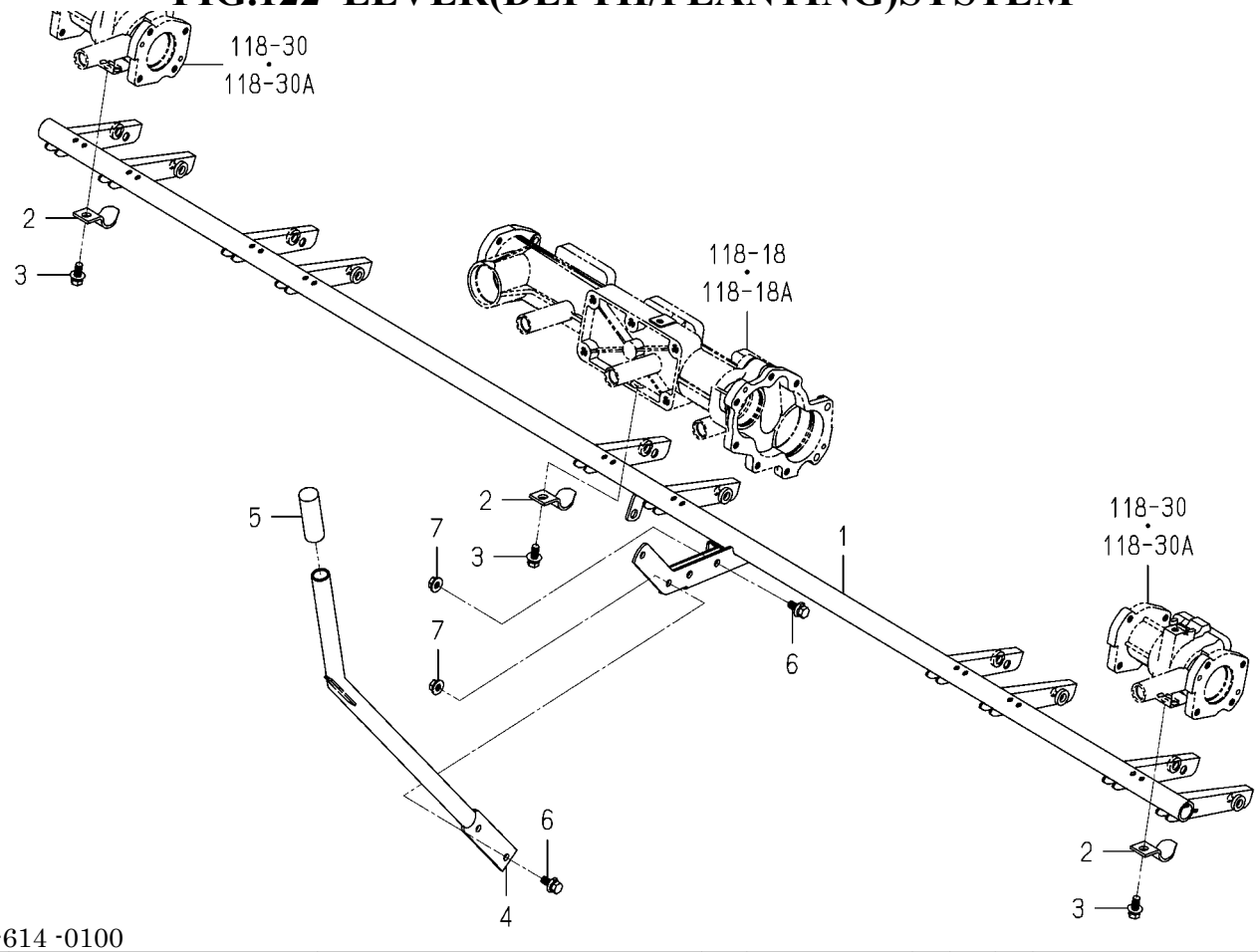

2213-614 -0100

KEY	PART CODE	DESCRIPTION	SPC	TYPE OF MODEL PZ80E16		ITC	COL	GRP	REMARKS
1	2213-614-200-00	FRAME(DEPTH/8) COMP	*	1					
2	2204-614-002-00	PLATE,HOLDER	*	3					
3	V211-360-802-00	BOLT/SP	*	3					
4	2213-614-230-00	LEVER/DEPTH/8 COMP	*	1					
5	2183-613-003-00	GRIP	*	1					
6	V211-360-802-50	BOLT/SP	*	4					
7	V362-260-008-00	NUT/WASHER	*	4					

FIG.123 FLOAT(CENTER)SYSTEM (EXCEPT F TYPE)(NO.101650-)

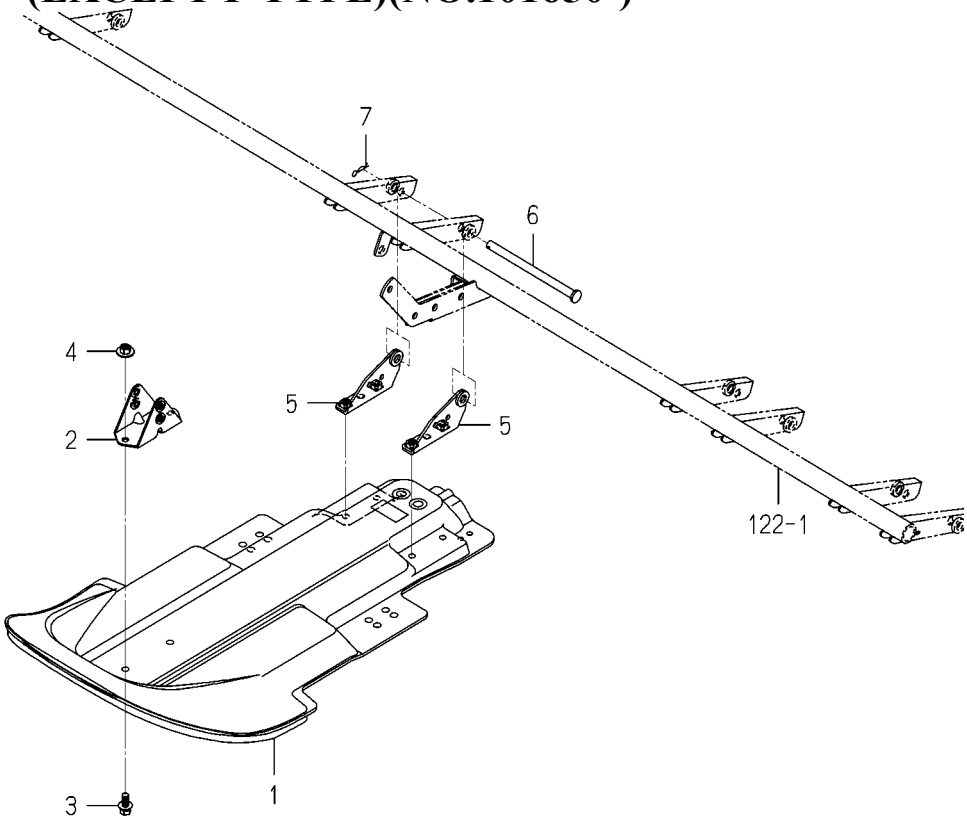

2213-616B-0100

KEY	PART CODE	DESCRIPTION	SPC	TYPE OF MODEL PZ80E16		ITC	COL	GRP	REMARKS
1	2171-634-001-10	FLOAT/CENTRE	*	1 101650-					
2	2213-616-200-00	STAY/FLOAT/CENTER/8	*	1 101650-					
3	V211-360-802-00	BOLT/SP	*	2 101650-					
4	V363-260-008-00	NUT/WASHER	*	2 101650-					
5	2213-616-210-00	STAY/CENTER FLOAT/8	*	2 101650-					
6	2174-635-003-00	PIN/10X156	*	1 101650-					
7	3505-704-003-00	PIN,HAIR (10)	*	1 101650-					

FIG.124 FLOAT(CENTER)SYSTEM (F TYPE)(NO.101650-)

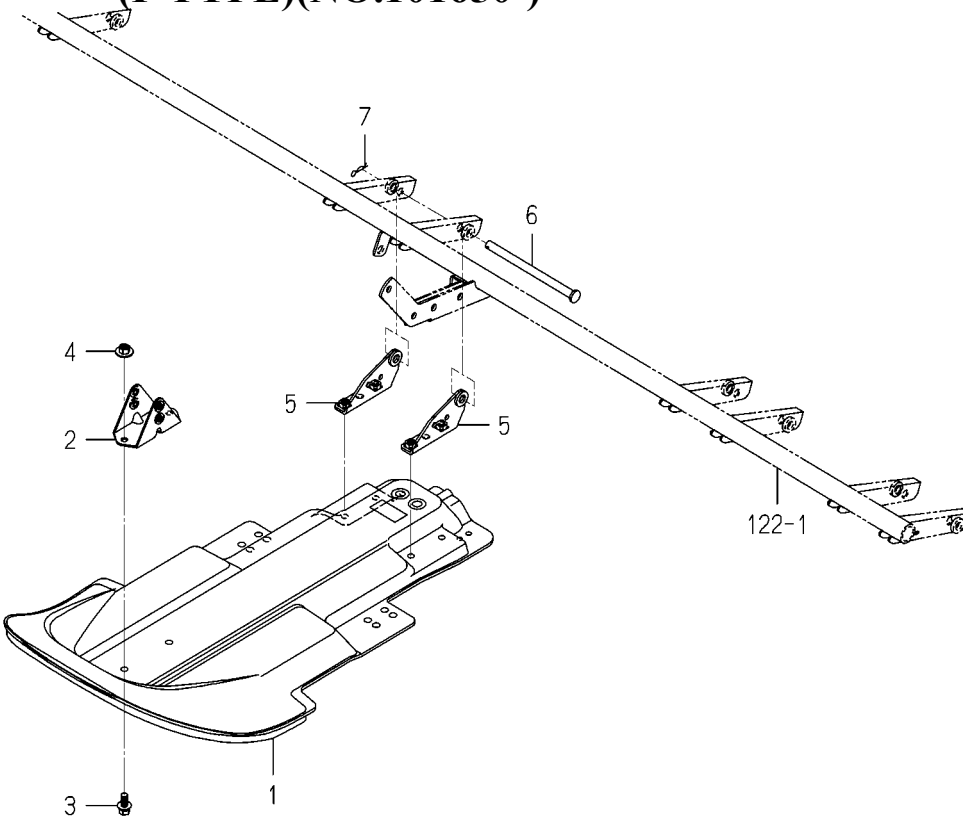

2213-616C-0100

KEY	PART CODE	DESCRIPTION	SPC	TYPE OF MODEL PZ80E16		ITC	COL	GRP	REMARKS
1	2204-616-005-00	FLOOT/CENTER/6L	*	1 101650-					
2	2213-616-200-00	STAY/FLOAT/CENTER/8	*	1 101650-					
3	V211-360-802-00	BOLT/SP	*	2 101650-					
4	V363-260-008-00	NUT/WASHER	*	2 101650-					
5	2213-616-210-00	STAY/CENTER FLOAT/8	*	2 101650-					
6	2174-635-003-00	PIN/10X156	*	1 101650-					
7	3505-704-003-00	PIN,HAIR (10)	*	1 101650-					

FIG.125 FLOAT(CENTER)SYSTEM (F TYPE)(NO.100001-101649)

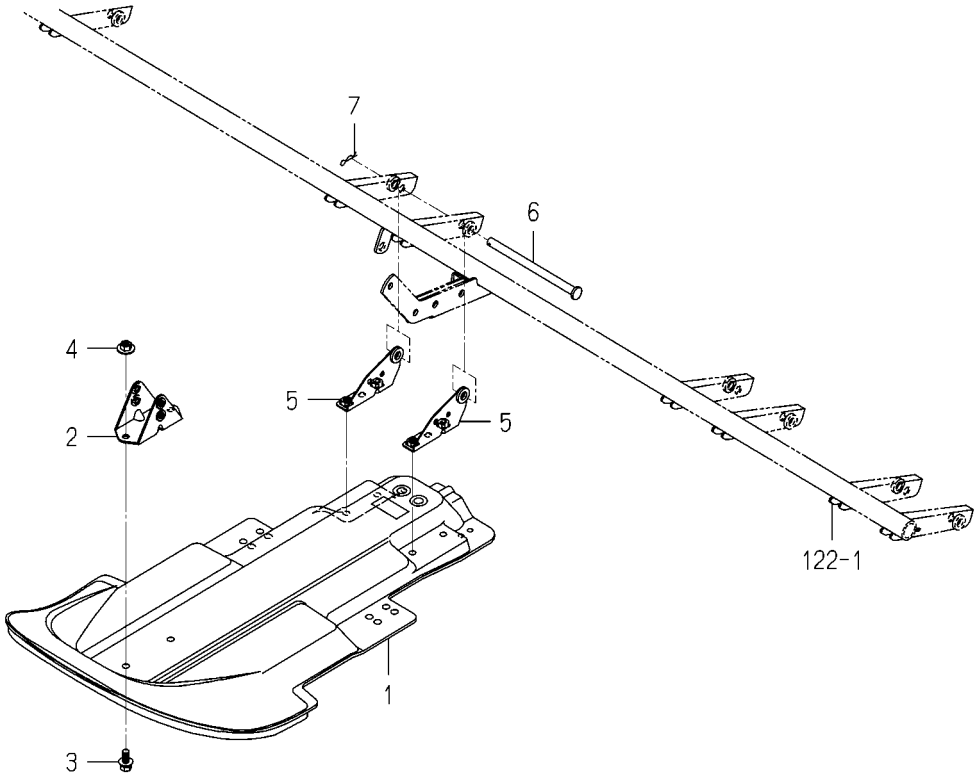

2213-616H-0100

KEY	PART CODE	DESCRIPTION	SPC	TYPE OF MODEL PZ80E16		ITC	COL	GRP	REMARKS
1	2204-616-005-00	FLOOT/CENTER/6L	*	1 -101649					
2	2213-616-200-00	STAY/FLOAT/CENTER/8	*	1 -101649					
3	V211-360-802-00	BOLT/SP	*	2 -101649					
4	V363-260-008-00	NUT/WASHER	*	2 -101649					
5	2204-616-200-00	STAY	*	2 -101649					
6	2174-635-003-00	PIN/10X156	*	1 -101649					
7	3505-704-003-00	PIN,HAIR (10)	*	1 -101649					

FIG.126 FLOAT(CENTER)SYSTEM (EXCEPT F TYPE)(NO.100001-101649)

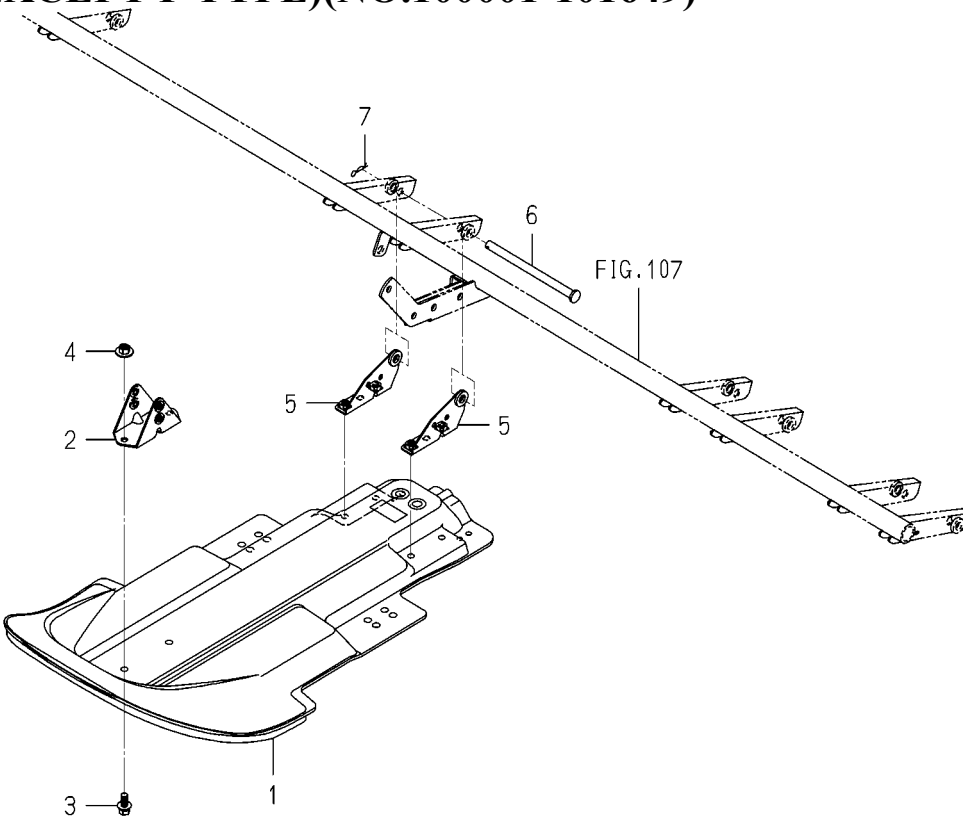

2213-616N-0100

KEY	PART CODE	DESCRIPTION	SPC	TYPE OF MODEL PZ80E16		ITC	COL	GRP	REMARKS
1	2171-634-001-10	FLOAT/CENTRE	*	1 -101649					
2	2213-616-200-00	STAY/FLOAT/CENTER/8	*	1 -101649					
3	V211-360-802-00	BOLT/SP	*	2 -101649					
4	V363-260-008-00	NUT/WASHER	*	2 -101649					
5	2204-616-200-00	STAY	*	2 -101649					
6	2174-635-003-00	PIN/10X156	*	1 -101649					
7	3505-704-003-00	PIN,HAIR (10)	*	1 -101649					

FIG.127 ADJUSTMENT(ROLLING)SYSTEM

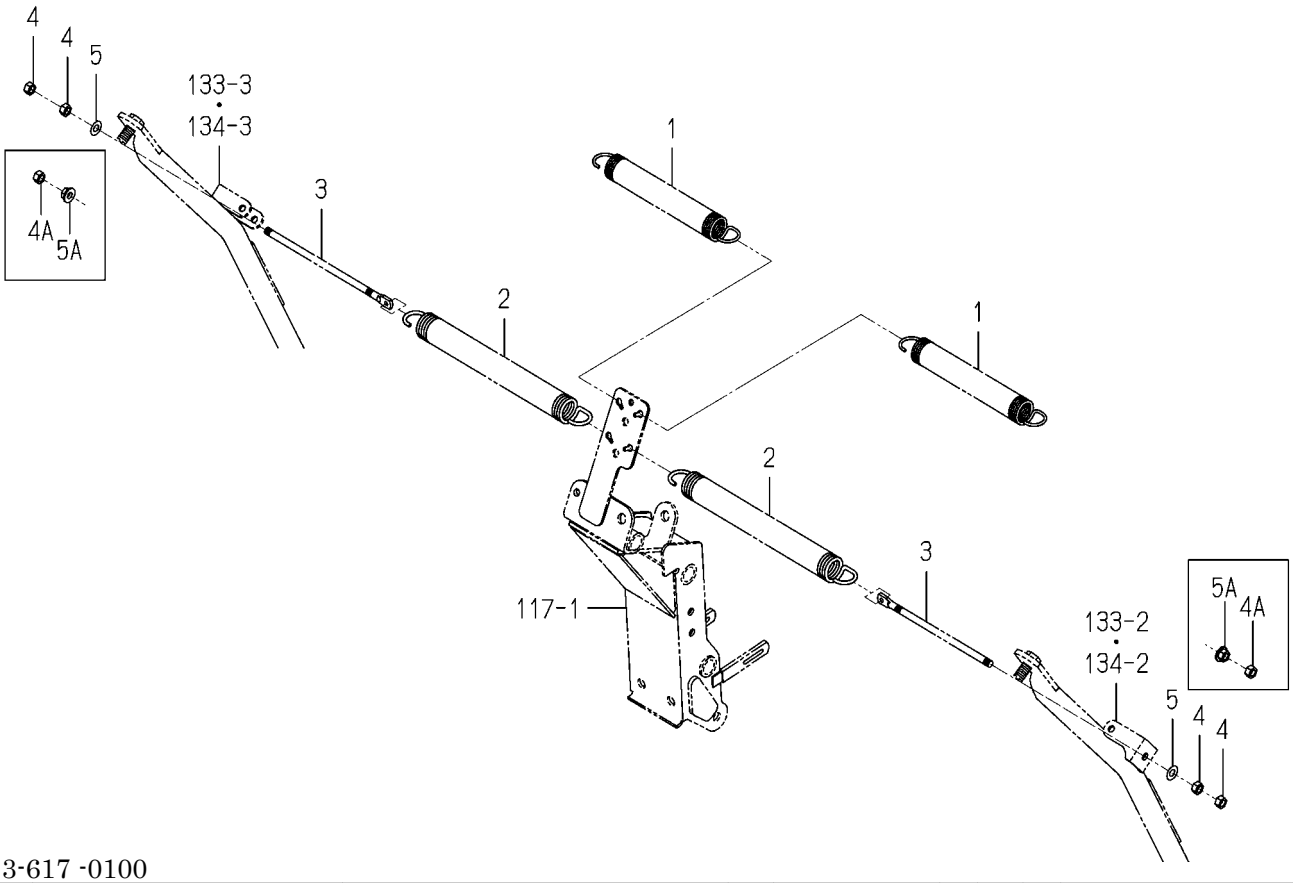

2213-617 -0100

KEY	PART CODE	DESCRIPTION	SPC	TYPE OF MODEL PZ80E16		ITC	COL	GRP	REMARKS
1	2146-640-001-60	SPRING/HE232	*	2					
2	2161-618-002-10	SPRING/HE300	*	2					
3	2170-617-002-00	ROD/M8X205	*	2					
4	V304-260-008-00	NUT	*	4 -102041					
4A	V304-260-008-00	NUT	*	2 102042-					
5	V411-260-008-00	WASHER,PL/M 8	*	2 -102041					
5A	V362-260-008-00	NUT/WASHER	*	2 102042-					

FIG.128 AUTOMATIC(ROLLING)SYSTEM

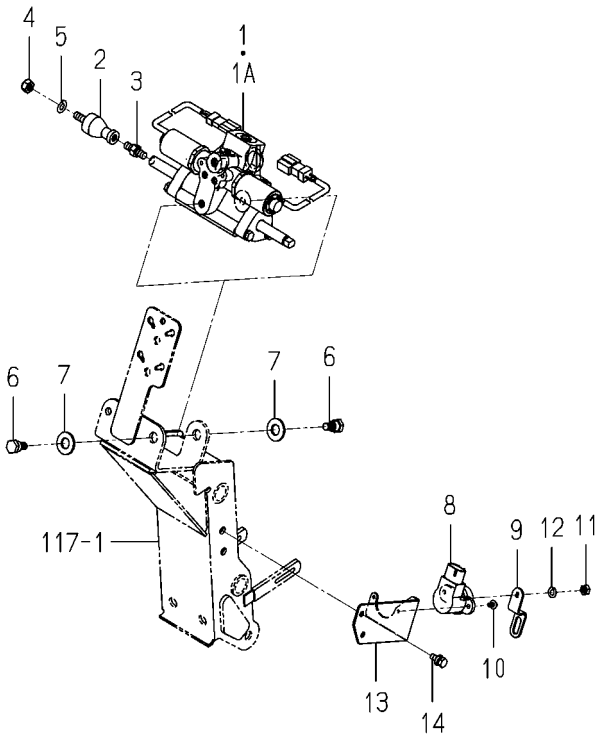

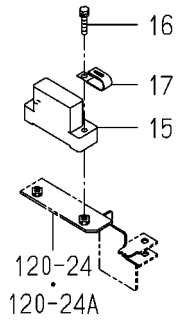

2213-618 -0100

KEY	PART CODE	DESCRIPTION	SPC	TYPE OF MODEL PZ80E16		ITC	COL	GRP	REMARKS
1	K116-029-000-40	CYLINDER/PG	*	1 -101649					FIG 189
1A	K116-029-000-50	UNIT/VALVE/CYLINDER/	*	1 101650-		1			FIG 189
2	2190-436-001-00	JOINT	*	1					
3	2186-436-008-00	ROD	*	1					
4	2144-117-002-00	NUT/M8	*	1					
5	V401-160-008-00	WASHER,SP/M 8	*	1					
6	2186-436-007-00	BOLT	*	2					
7	V411-260-012-00	WASHER /M12	*	2					
8	1729-662-340-00	SENSOR/ANGLE/110/R	*	1					
9	2213-545-001-00	ARM/SENSOR/ROLLING/8	*	1					
10	V120-364-001-00	SCREW/SP	*	2					
11	V301-260-006-00	NUT/M6	*	2					
12	V401-160-006-00	WASHER,SP/M 6	*	2					
13	2213-601-004-00	STAY/SENSOR/ROLLING	*	1					
14	V210-360-601-60	BOLT(SP)/M6X16	*	2					
15	1690-505-240-00	SENSOR/SLOPE ASSY	*	1					
16	V210-260-603-00	BOLT/S	*	2					
17	3612-631-001-00	CLAMP,WINKER B	*	1					

FIG.129 RAKE SYSTEM

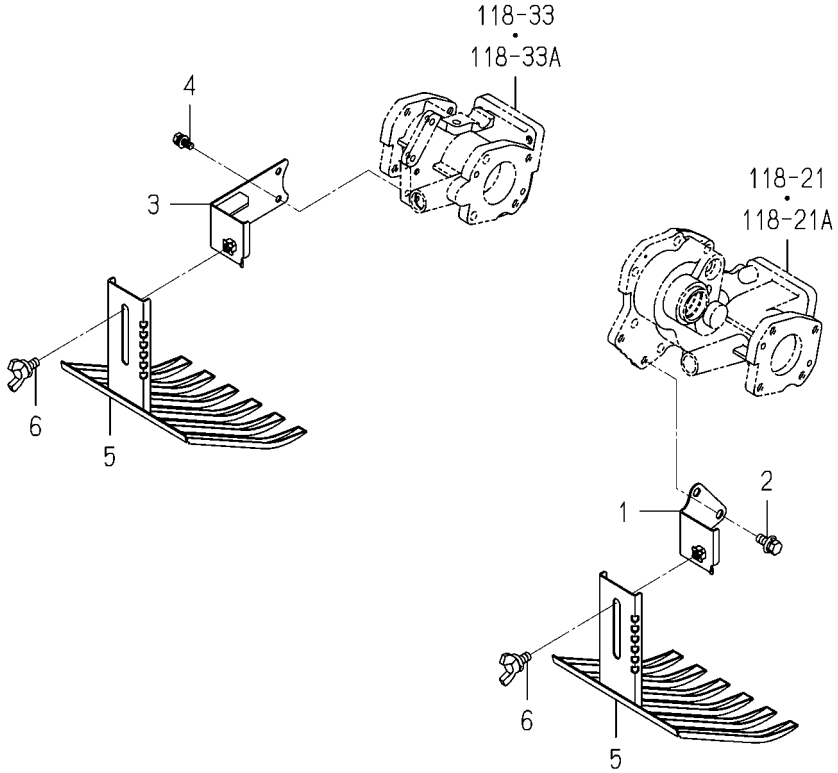

2213-619N-0100

KEY	PART CODE	DESCRIPTION	SPC	TYPE OF MODEL PZ80E16		ITC	COL	GRP	REMARKS
1	2204-619-310-00	STAY/RAKE/6/LH/L	*	1					
2	V211-360-802-00	BOLT/SP	*	2					
3	2213-619-420-00	STAY/RAKE/8L COMP	*	1					
4	V210-360-601-60	BOLT(SP)/M6X16	*	2					
5	2204-619-230-10	RAKE/PZ	*	2					
6	V273-360-802-00	BOLT,SEMS/M8X20	*	2					

FIG.130 RAKE(SIDE)SYSTEM(NO.101047-)

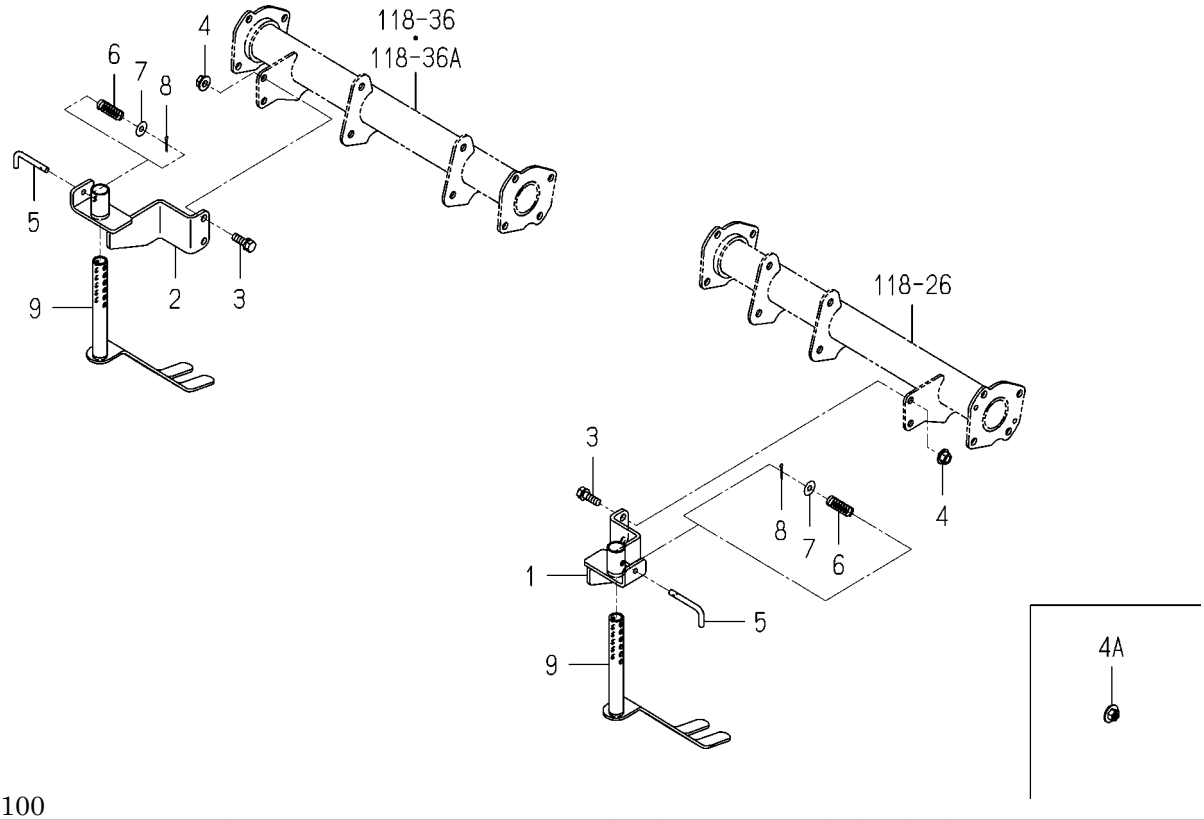

2213-619R-0100

KEY	PART CODE	DESCRIPTION	SPC	TYPE OF MODEL PZ80E16		ITC	COL	GRP	REMARKS
1	2213-619-380-00	STAY/RAKE/SIDE/LH	*	1 101047-					
2	2213-619-390-00	STAY/RAKE/SIDE/RH	*	1 101047-					
3	V211-260-802-50	BOLT/S	*	4 101047-					
4	V363-260-008-00	NUT/WASHER	*	4 -101649					
4A	V362-260-008-00	NUT/WASHER	*	4 101650-					
5	2190-639-001-00	BAR,STOP/PG83H	*	2 101047-					
6	1370-405-003-00	SPRING,PRESS/23	*	2 101047-					
7	3560-503-302-00	WASHER,WIRE TENSION	*	2 101047-					
8	V500-162-501-50	PIN,SPLIT/2.5X15	*	2 101047-					
9	2213-619-360-00	RAKE/SIDE/8 COMP	*	2 101047-					

FIG.131 FRAME(SIDE)SYSTEM

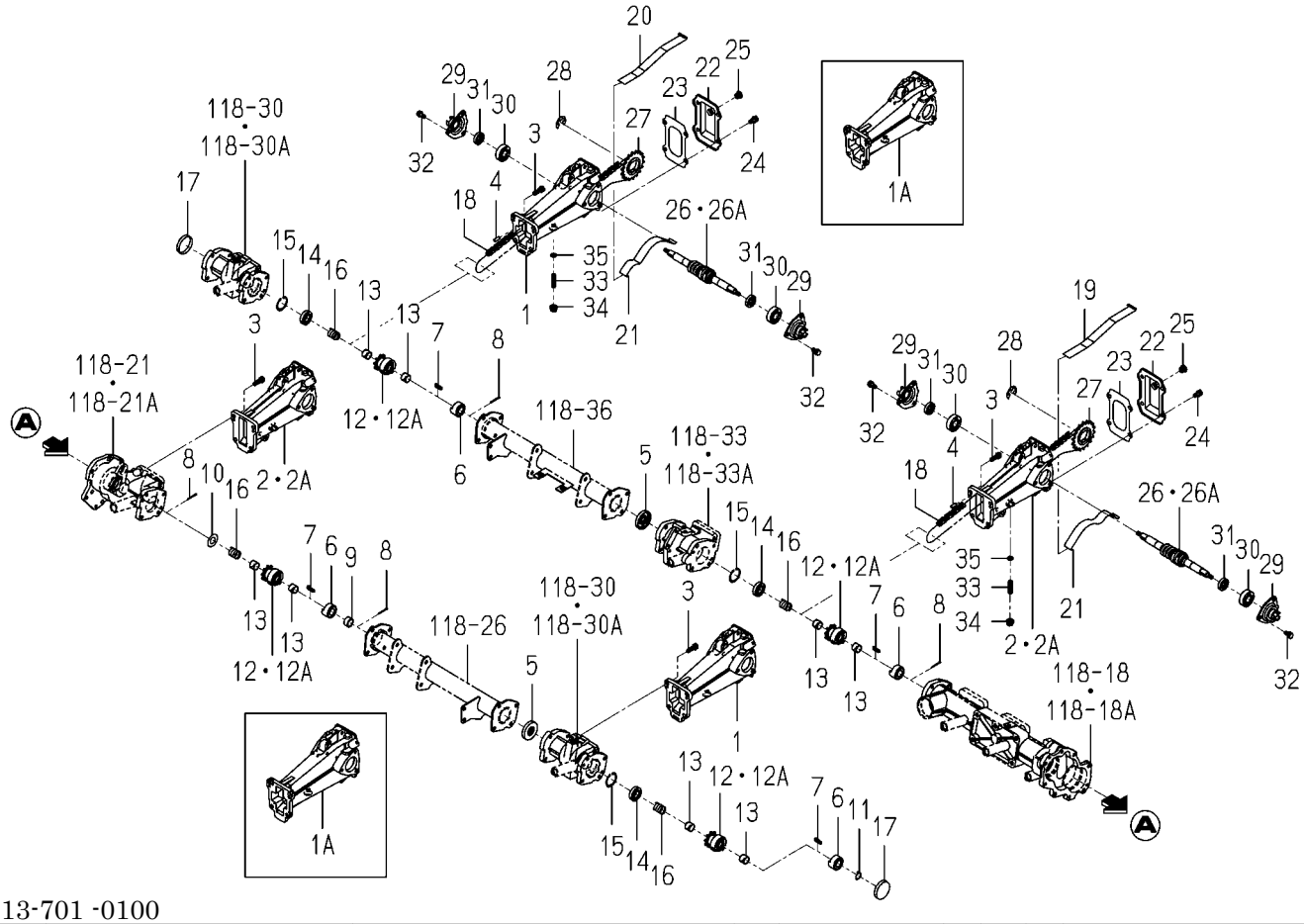

2213-701 -0100

KEY	PART CODE	DESCRIPTION	SPC	TYPE OF MODEL PZ80E16		ITC	COL	GRP	REMARKS
1	2213-701-002-00	CASE/HOLDER/TRANSPLA	*	2 -102091					
1A	2218-701-001-00	CASE/HOLDER/TRANSPLA	*	2 102092-					
2	2213-701-019-00	CASE/SUPPORT/8	*	2 -102091					
2A	2213-701-019-10	CASE/SUPPORT/8	*	2 102092-		1			
3	V211-260-802-50	BOLT/S	*	16					
4	V522-100-601-60	PIN	*	8					
5	V744-117-470-80	SEAL,OIL/TC17478	*	2					
6	2144-701-003-30	FINGER,RIDGE CLUTCH	*	4					
7	2204-701-025-10	KEY/05X05X23	*	4					
8	8841-701-062-00	PIN,COTTER/3X25/SUS	*	4					
9	2186-419-027-10	COLLAR	*	1					
10	2130-732-205-00	WASHER	*	1					
11	V704-140-017-00	RING,SNAP/17 C	*	1					
12	2213-701-024-00	SPROCKET/CLUTCH/PZ8	*	4 -102306					
12A	2213-701-024-10	SPROCKET/CLUTCH/PZ8	*	4 102307-		1			
13	2213-701-023-00	BUSH/17X19X15	*	8					
14	V600-110-600-30	BEARING,RB/6003	*	3					
15	V705-140-035-00	RING,CIRCLIP	*	3					
16	2194-701-020-00	SPRING	*	4					
17	2194-701-010-00	PLUG/47	*	2					
18	3505-411-210-00	CHAIN,MID COMP	*	4					
19	2213-701-004-00	TIGHTNER/SUPPORT/8UP	*	2					
20	2213-701-022-10	TIGHTNER/SUPPORT/8UP	*	2					
21	2213-701-005-00	TIGHTNER/SUPPORT/8LO	*	4					
22	2161-701-005-00	COVER	*	4					
23	2161-701-006-10	GASKET	*	4					
24	V211-260-801-60	BOLT,SEMS (S) M8X16	*	16					
25	2142-736-236-00	PLUG	*	4					
26	2186-703-200-40	SHAFT,PLANTING ARM	*	4 -102306					
26A	2186-703-200-60	SHAFT/PLANTING ARM	*	4 102307-		1			

FIG.131 FRAME(SIDE)SYSTEM

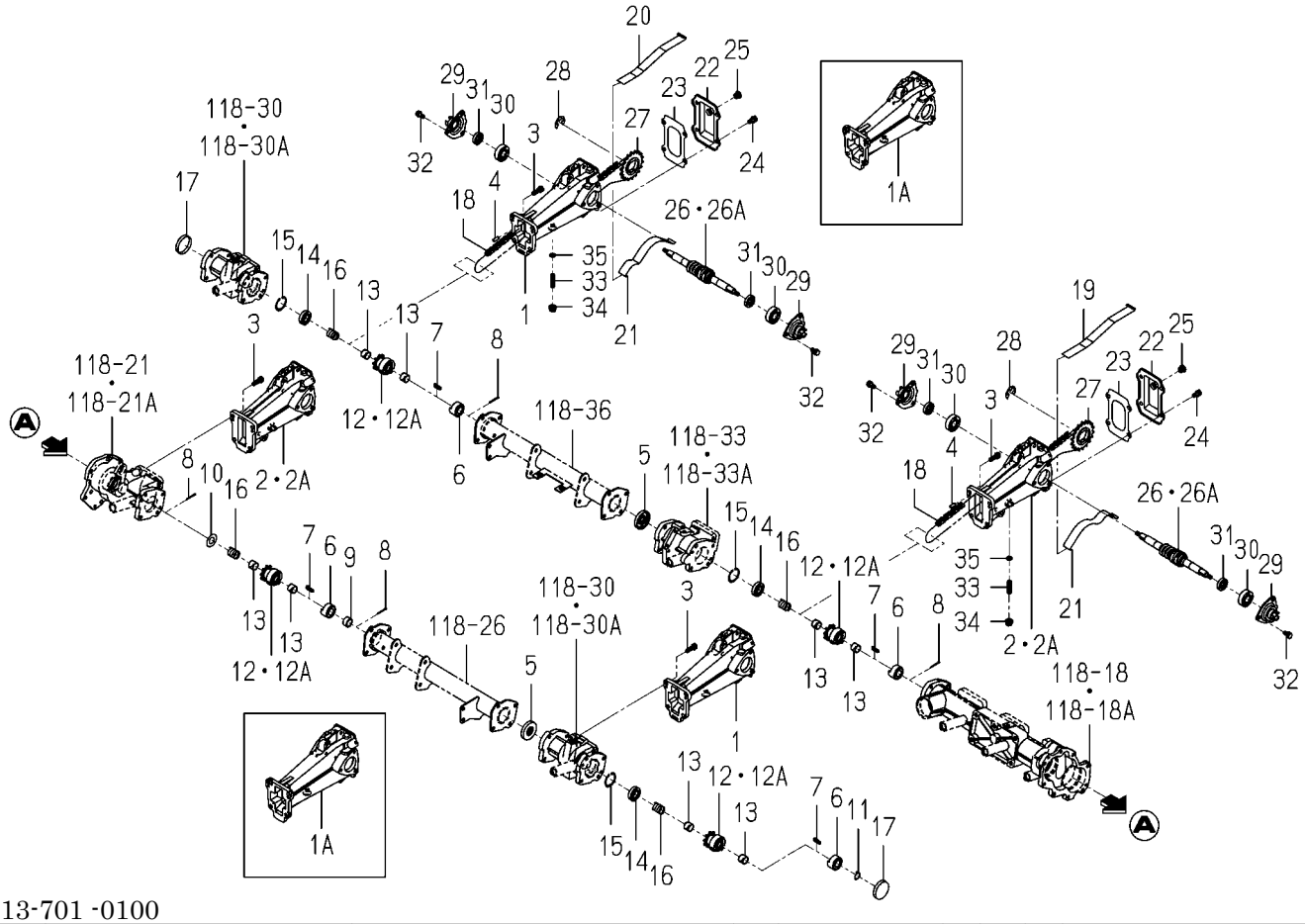

2213-701 -0100

KEY	PART CODE	DESCRIPTION	SPC	TYPE OF MODEL PZ80E16		ITC	COL	GRP	REMARKS
27	2161-701-003-20	SPROCKET/18	*	4					
28	V710-140-024-00	RING/SNAP	*	4					
29	2186-703-220-01	METAL/S	*	8			6G		
30	V600-110-620-30	BEARING,RB/6203	*	8					
31	V740-117-300-60	SEAL,OIL/SC17306	*	8					
32	V211-260-801-60	BOLT,SEMS (S) M8X16	*	24					
33	2213-701-003-10	BOLT/TENSIONER/M10X3	*	4					
34	2213-701-001-10	NUT/FLANGE/M10	*	4					
35	V720-101-901-00	O-RING	*	4					

FIG.132 PIPING(OIL/SLIDER)SYSTEM

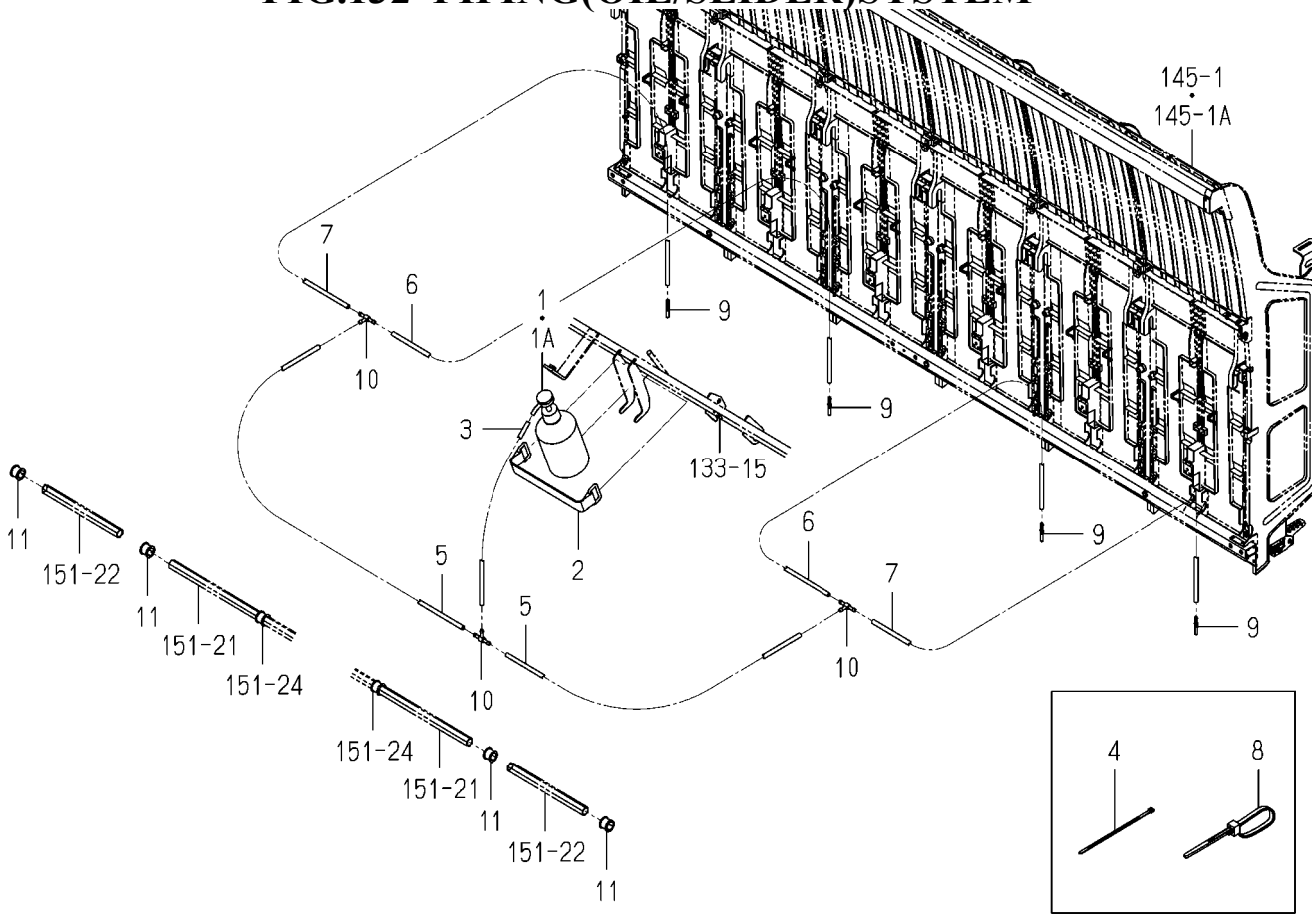

2213-703 -0100

KEY	PART CODE	DESCRIPTION	SPC	TYPE OF MODEL PZ80E16		ITC	COL	GRP	REMARKS
1	2213-703-210-00	PUMP/OILSET	*	1 -102349					
1A	2213-703-210-10	PUMP/OILSET	*	1 102350-		1			
2	3640-260-200-30	BATTERYSTAY COMP	*	1					
3	2213-801-006-00	HOSE/08X600	*	1					
4	1376-402-003-00	BAND,WIRE/140	*	1					
5	2213-801-005-00	HOSE/08X800	*	2					
6	2213-801-007-00	HOSE/08X530	*	2					
7	2213-801-008-00	HOSE/08X430	*	2					
8	2132-545-008-00	WIRE BAND(92)	*	2					
9	2213-801-014-00	NOZZLE/OIL	*	4					
10	3632-360-036-00	JOINTT-TYPE 2	*	3					
11	2186-805-011-00	BUSH,SEEDLING	*	4					

FIG.133 FRAME (TANK/SEEDLING)SYSTEM(NO.100001-102349)

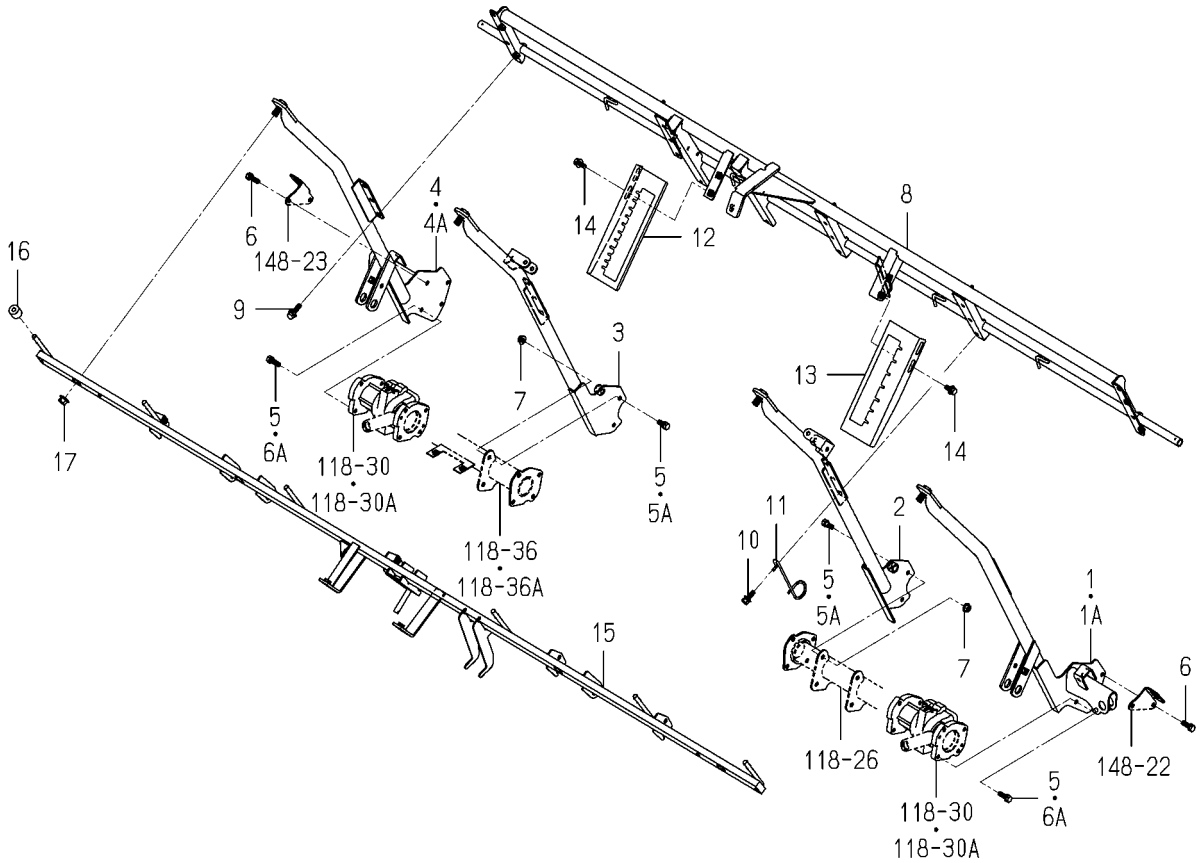

2213-705E-0100

KEY	PART CODE	DESCRIPTION	SPC	TYPE OF MODEL PZ80E16		ITC	COL	GRP	REMARKS
1	2213-705-200-20	STAY/SEEDLING TANK/E	*	1 -101649					
1A	2213-705-200-30	STAY/SEEDLING TANK/E	*	1 -102349		3			
2	2213-705-210-10	STAY/SEEDLING_TANK/8	*	1 -102349					
3	2213-705-220-10	STAY/SEEDLING TANK/8	*	1 -102349					
4	2213-705-230-20	STAY/SEEDLING TANK/E	*	1 -101649					
4A	2213-705-230-30	STAY/SEEDLING TANK/E	*	1 -102349		3			
5	V211-260-802-00	BOLT/S	*	8 -101046					
5A	V211-260-802-00	BOLT/S	*	6 -102349					
6	V211-260-802-50	BOLT/S	*	4 -101046					
6A	V211-260-802-50	BOLT/S	*	6 -102349					
7	V362-260-008-00	NUT/WASHER	*	4 -102349					
8	2213-705-320-30	FRAME/SEEDLING TANK/	*	1 -102349					
9	V211-360-802-00	BOLT/SP	*	7 -102349					
10	V211-360-802-50	BOLT/SP	*	1 -102349					
11	2204-557-009-00	GUIDE/CABLE/RH	*	1 -102349					
12	2204-705-015-10	PLATE	*	1 -102349					
13	2204-705-017-00	PLATE/GUIDE/DEPTH	*	1 -102349					
14	V211-360-802-00	BOLT/SP	*	4 -102349					
15	2213-705-420-40	STAY/FRAME/8L COMP	*	1 -102349					
16	2130-802-011-10	ROLLER,SEEDLING TANK	*	6 -102349					
17	V363-260-010-00	NUT/M10	*	4 -102349					

FIG.134 FRAME (TANK/SEEDLING)SYSTEM(NO.102350-)

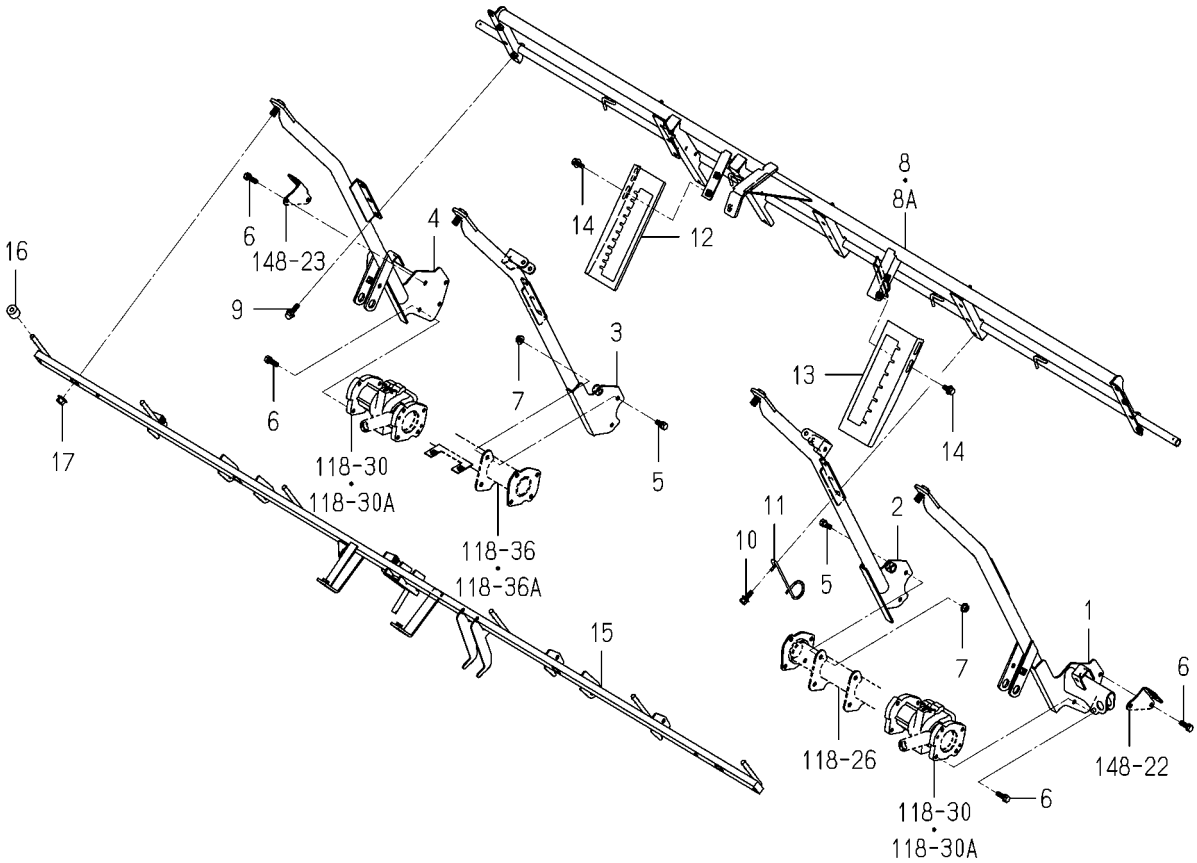

2213-705K-0100

KEY	PART CODE	DESCRIPTION	SPC	TYPE OF MODEL PZ80E16		ITC	COL	GRP	REMARKS
1	2213-705-200-30	STAY/SEEDLING TANK/E	*	1 102350-					
2	2213-705-210-10	STAY/SEEDLING_TANK/8	*	1 102350-					
3	2213-705-220-10	STAY/SEEDLING TANK/8	*	1 102350-					
4	2213-705-230-30	STAY/SEEDLING TANK/E	*	1 102350-					
5	V211-260-802-00	BOLT/S	*	6 102350-					
6	V211-260-802-50	BOLT/S	*	6 102350-					
7	V362-260-008-00	NUT/WASHER	*	4 102350-					
8	2213-705-320-30	FRAME/SEEDLING TANK/	*	1 -102400					
8A	2213-705-320-40	FRAME/SEEDLING TANK/	*	1 102401-		1			
9	V211-360-802-00	BOLT/SP	*	7 102350-					
10	V211-360-802-50	BOLT/SP	*	1 102350-					
11	2204-557-009-00	GUIDE/CABLE/RH	*	1 102350-					
12	2204-705-015-10	PLATE	*	1 102350-					
13	2204-705-017-00	PLATE/GUIDE/DEPTH	*	1 102350-					
14	V211-360-802-00	BOLT/SP	*	4 102350-					
15	2213-705-420-60	STAY/FRAME/8L COMP	*	1 102350-					
16	2130-802-011-10	ROLLER,SEEDLING TANK	*	6 102350-					
17	V363-260-010-00	NUT/M10	*	4 102350-					

FIG.135 LEVER(PICKING/SEEDLING)SYSTEM

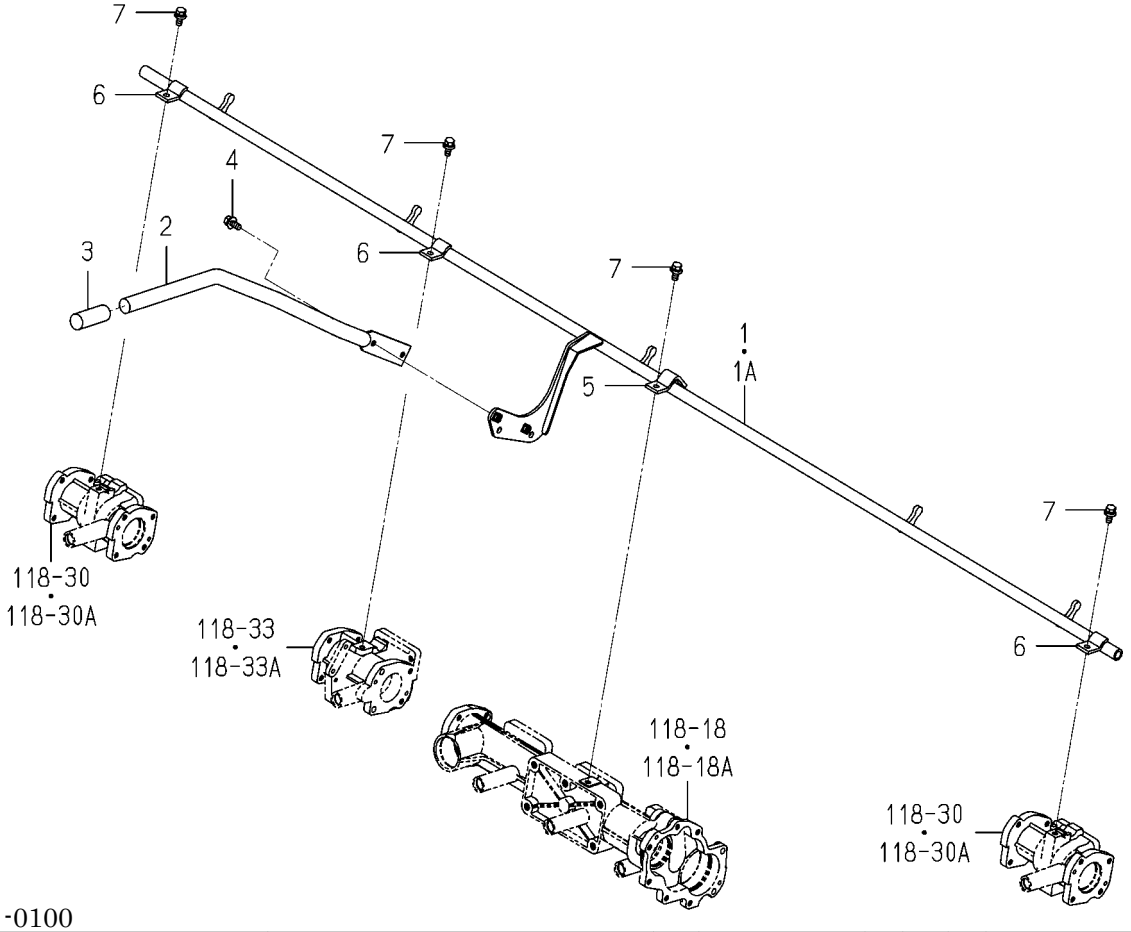

2213-706 -0100

KEY	PART CODE	DESCRIPTION	SPC	TYPE OF MODEL PZ80E16		ITC	COL	GRP	REMARKS
1	2213-706-200-00	TUBE/SEEDLING PICKIN	*	1 -101389					
1A	2213-706-200-10	TUBE/SEEDLING PICKIN	*	1 101390-		1			
2	2213-706-240-00	LEVER/SEEDLING/PZ8	*	1					
3	2183-613-003-00	GRIP	*	1					
4	V211-360-802-00	BOLT/SP	*	2					
5	2204-706-270-00	PLATE	*	1					
6	2204-706-011-00	PLATE,HOLDER	*	3					
7	V211-360-802-00	BOLT/SP	*	4					

FIG.136 FLOAT(SIDE)SYSTEM (EXCEPT F TYPE)(NO.101650-)

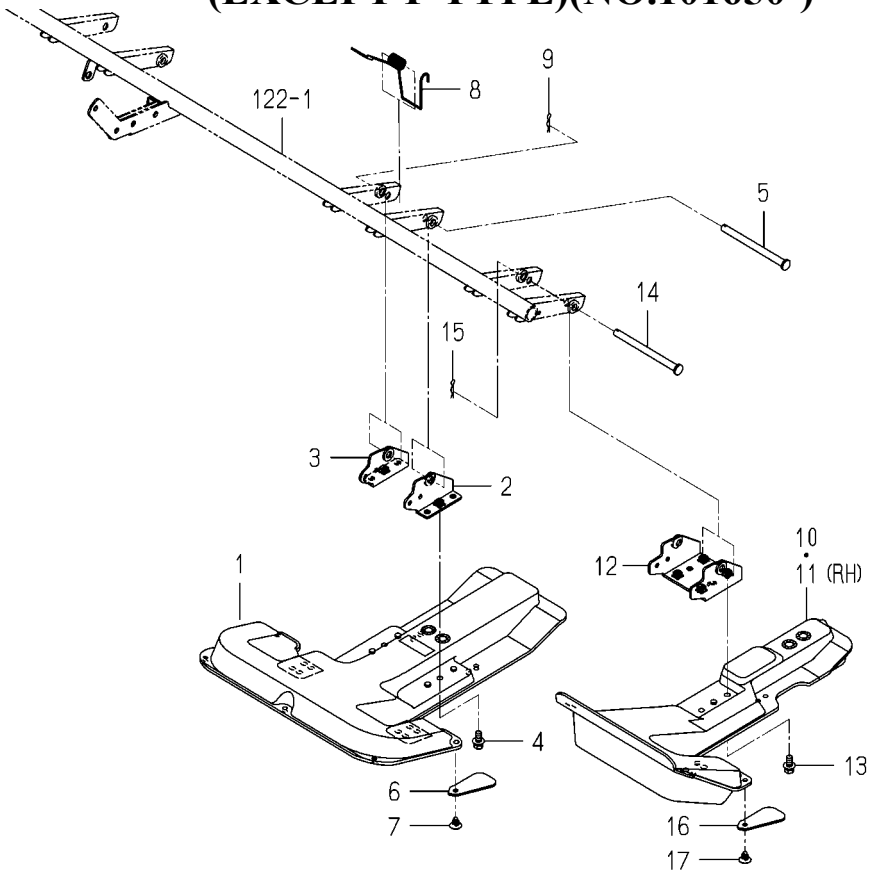

2213-710B-0100

KEY	PART CODE	DESCRIPTION	SPC	TYPE OF MODEL PZ80E16		ITC	COL	GRP	REMARKS
1	2218-710-001-10	FLOAT/SIDE/L	*	2 101650-					
2	2213-710-220-00	STAY/SIDE FLOAT/8L	*	2 101650-					
3	2213-710-230-00	STAY/SIDE FLOAT/8R	*	2 101650-					
4	V211-360-802-00	BOLT/SP	*	4 101650-					
5	2139-811-001-00	PIN,SUPPORT/LEVER	*	2 101650-					
6	2161-711-012-00	RAKE	*	4 101650-					
7	1566-705-006-00	CAP/08	*	4 101650-					
8	2204-710-014-10	SPRING/HT015/B	*	2 101650-					
9	3505-704-003-00	PIN,HAIR (10)	*	2 101650-					
10	2204-710-015-10	FLOAT/SIDE/ROTOR/L	*	1 101650-					
11	2204-710-016-10	FLOAT/SIDE/ROTOR/R	*	1 101650-					
12	2213-710-240-00	STAY/SIDEFLOAT/ COMP	*	2 101650-					
13	V211-360-802-00	BOLT/SP	*	4 101650-					
14	2139-811-001-00	PIN,SUPPORT/LEVER	*	2 101650-					
15	3505-704-003-00	PIN,HAIR (10)	*	2 101650-					
16	2161-711-012-00	RAKE	*	2 101650-					
17	1566-705-006-00	CAP/08	*	2 101650-					

FIG.137 FLOAT(SIDE)SYSTEM(F TYPE)(NO.101650-)

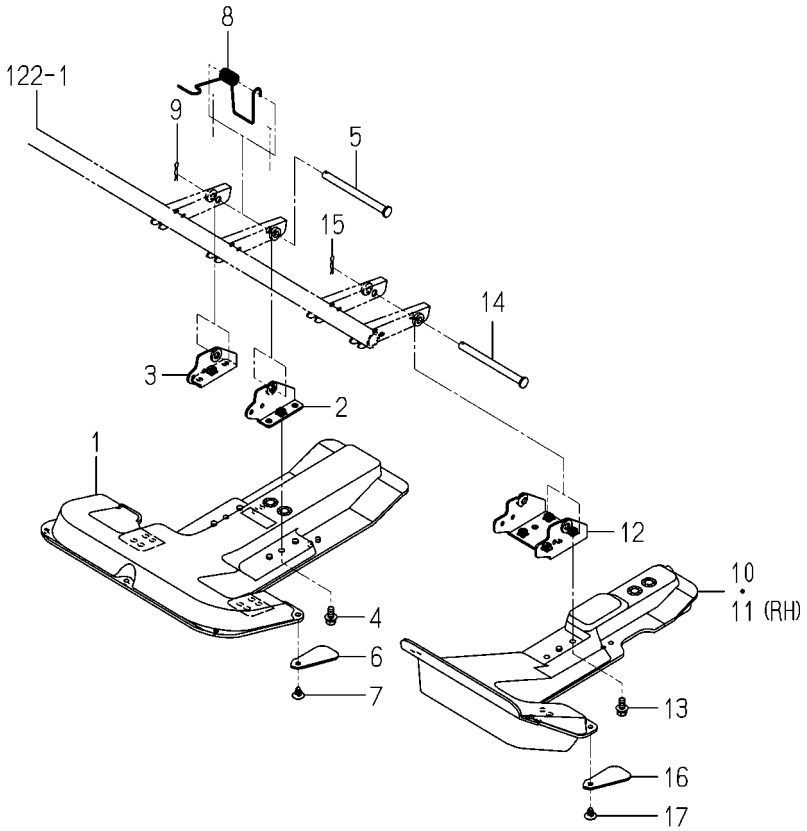

2213-710C-0100

KEY	PART CODE	DESCRIPTION	SPC	TYPE OF MODEL PZ80E16		ITC	COL	GRP	REMARKS
1	2218-710-001-10	FLOAT/SIDE/L	*	2 101650-					
2	2213-710-220-00	STAY/SIDE FLOAT/8L	*	2 101650-					
3	2213-710-230-00	STAY/SIDE FLOAT/8R	*	2 101650-					
4	V211-360-802-00	BOLT/SP	*	4 101650-					
5	2139-811-001-00	PIN,SUPPORT/LEVER	*	2 101650-					
6	2161-711-012-00	RAKE	*	4 101650-					
7	1566-705-006-00	CAP/08	*	4 101650-					
8	2204-710-012-10	SPRING/HT015/S	*	2 101650-					
9	3505-704-003-00	PIN,HAIR (10)	*	2 101650-					
10	2204-710-015-10	FLOAT/SIDE/ROTOR/L	*	1 101650-					
11	2204-710-016-10	FLOAT/SIDE/ROTOR/R	*	1 101650-					
12	2213-710-240-00	STAY/SIDEFLOAT/ COMP	*	2 101650-					
13	V211-360-802-00	BOLT/SP	*	4 101650-					
14	2139-811-001-00	PIN,SUPPORT/LEVER	*	2 101650-					
15	3505-704-003-00	PIN,HAIR (10)	*	2 101650-					
16	2161-711-012-00	RAKE	*	2 101650-					
17	1566-705-006-00	CAP/08	*	2 101650-					

FIG.138 FLOAT(SIDE)SYSTEM (F TYPE)(NO.100001-101649)

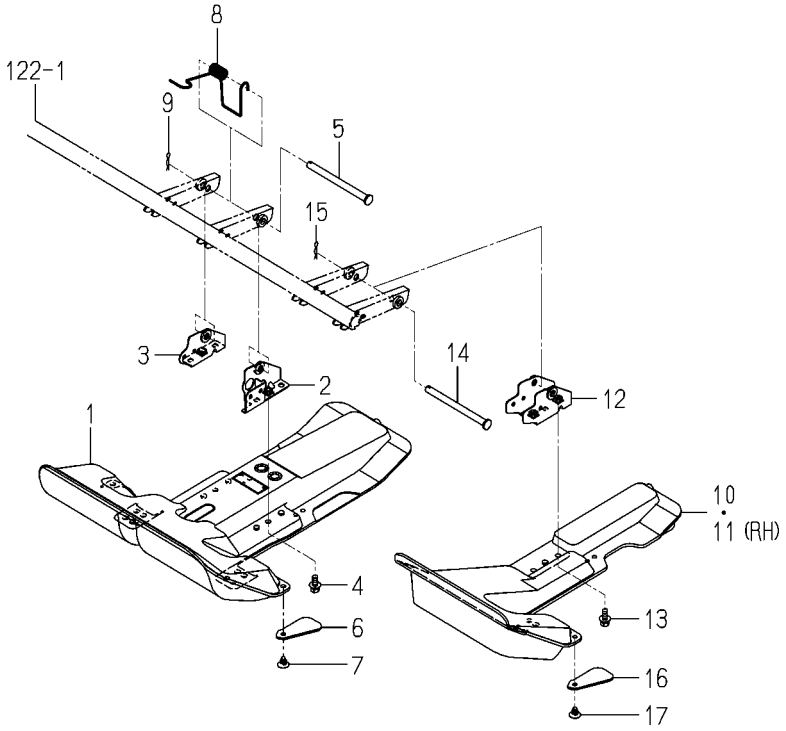

2213-710F-0100

KEY	PART CODE	DESCRIPTION	SPC	TYPE OF MODEL PZ80E16		ITC	COL	GRP	REMARKS
1	2204-710-007-10	FLOAT/SIDE/ROTER	*	2 -101649					
2	2204-710-200-10	STAY/LH	*	2 -101649					
3	2204-710-210-10	STAY/RH	*	2 -101649					
4	V211-360-802-00	BOLT/SP	*	4 -101649					
5	2139-811-001-00	PIN,SUPPORT/LEVER	*	2 -101649					
6	2161-711-012-00	RAKE	*	4 -101649					
7	1566-705-006-00	CAP/08	*	4 -101649					
8	2204-710-012-10	SPRING/HT015/S	*	2 -101649					
9	3505-704-003-00	PIN,HAIR (10)	*	2 -101649					
10	2204-710-015-00	FLOAT/SIDE/ROTER/L	*	1 -101649					
11	2204-710-016-00	FLOAT/SIDE/ROTER/R	*	1 -101649					
12	2204-710-260-00	STAY	*	2 -101649					
13	V211-360-802-00	BOLT/SP	*	4 -101649					
14	2139-811-001-00	PIN,SUPPORT/LEVER	*	2 -101649					
15	3505-704-003-00	PIN,HAIR (10)	*	2 -101649					
16	2161-711-012-00	RAKE	*	2 -101649					
17	1566-705-006-00	CAP/08	*	2 -101649					

FIG.139 FLOAT(SIDE)SYSTEM (EXCEPT F TYPE)(NO.100001-101649)

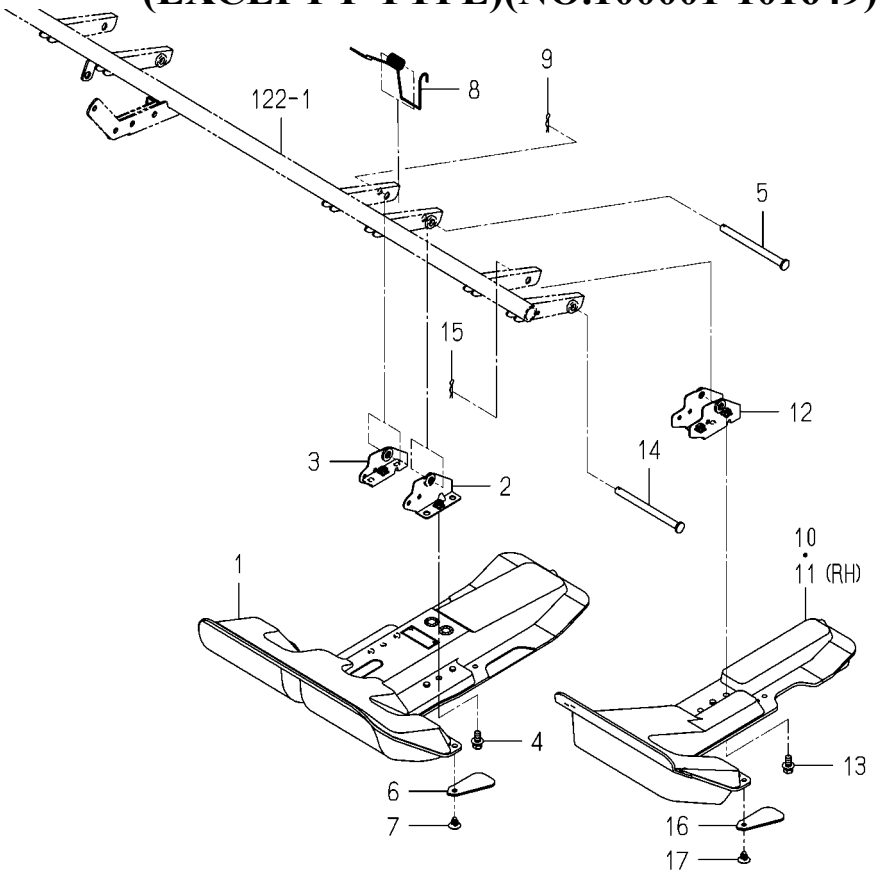

2213-710N-0100

KEY	PART CODE	DESCRIPTION	SPC	TYPE OF MODEL PZ80E16		ITC	COL	GRP	REMARKS
1	2204-710-007-10	FLOAT/SIDE/ROTER	*	2 -101649					
2	2204-710-200-10	STAY/LH	*	2 -101649					
3	2204-710-210-10	STAY/RH	*	2 -101649					
4	V211-360-802-00	BOLT/SP	*	4 -101649					
5	2139-811-001-00	PIN,SUPPORT/LEVER	*	2 -101649					
6	2161-711-012-00	RAKE	*	4 -101649					
7	1566-705-006-00	CAP/08	*	4 -101649					
8	2204-710-014-10	SPRING/HT015/B	*	2 -101649					
9	3505-704-003-00	PIN,HAIR (10)	*	2 -101649					
10	2204-710-015-00	FLOAT/SIDE/ROTER/L	*	1 -101649					
11	2204-710-016-00	FLOAT/SIDE/ROTER/R	*	1 -101649					
12	2204-710-260-00	STAY	*	2 -101649					
13	V211-360-802-00	BOLT/SP	*	4 -101649					
14	2139-811-001-00	PIN,SUPPORT/LEVER	*	2 -101649					
15	3505-704-003-00	PIN,HAIR (10)	*	2 -101649					
16	2161-711-012-00	RAKE	*	2 -101649					
17	1566-705-006-00	CAP/08	*	2 -101649					

FIG.140 STOPPER(FLOAT)SYSTEM(NO.101047-)

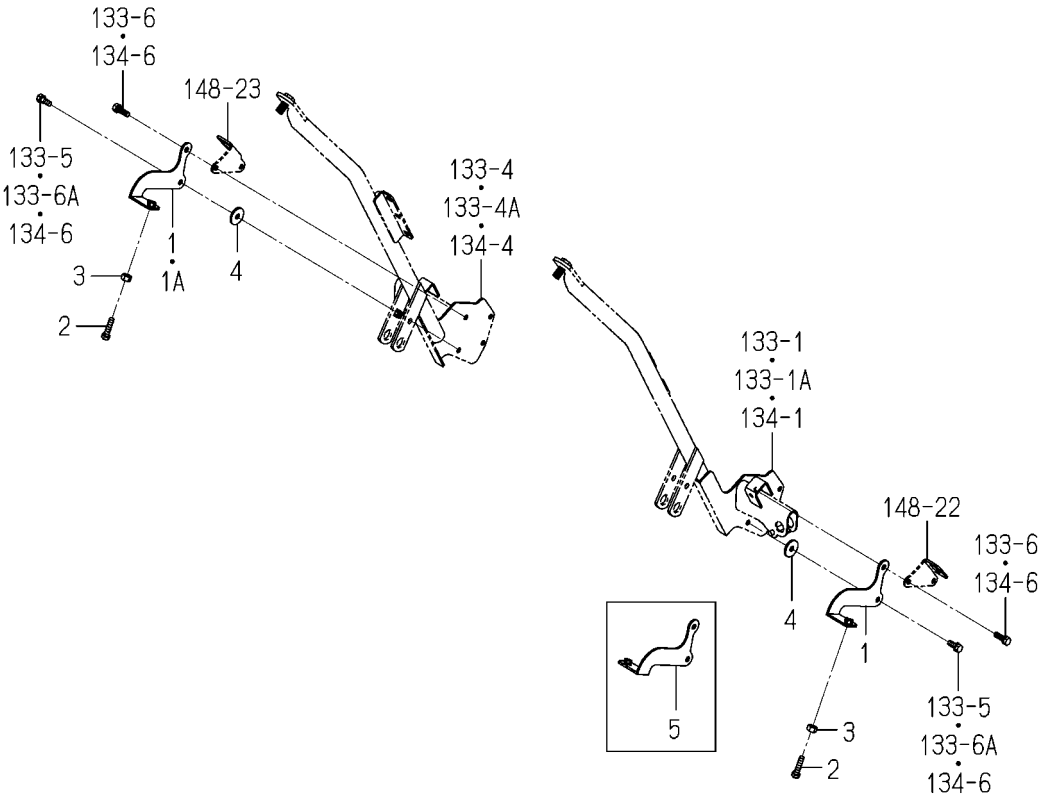

2213-710S-0100

KEY	PART CODE	DESCRIPTION	SPC	TYPE OF MODEL PZ80E16		ITC	COL	GRP	REMARKS
1	2213-710-300-00	FLOATSTOPPER/FRONT	*	2 -101649					
1A	2213-710-300-00	FLOATSTOPPER/FRONT	*	1 101650-					
2	V201-260-803-50	BOLT/M 8X35	*	2 101047-					
3	V304-260-008-00	NUT	*	2 101047-					
4	3740-314-017-00	WASHER,TENSION	*	2 101047-					
5	2213-710-310-00	FLOATSTOPPER/FRONT/L	*	1 101650-					

FIG.141 MARKER SYSTEM(1/2)

18~25-PLEASE SEE 2/2 PAGE

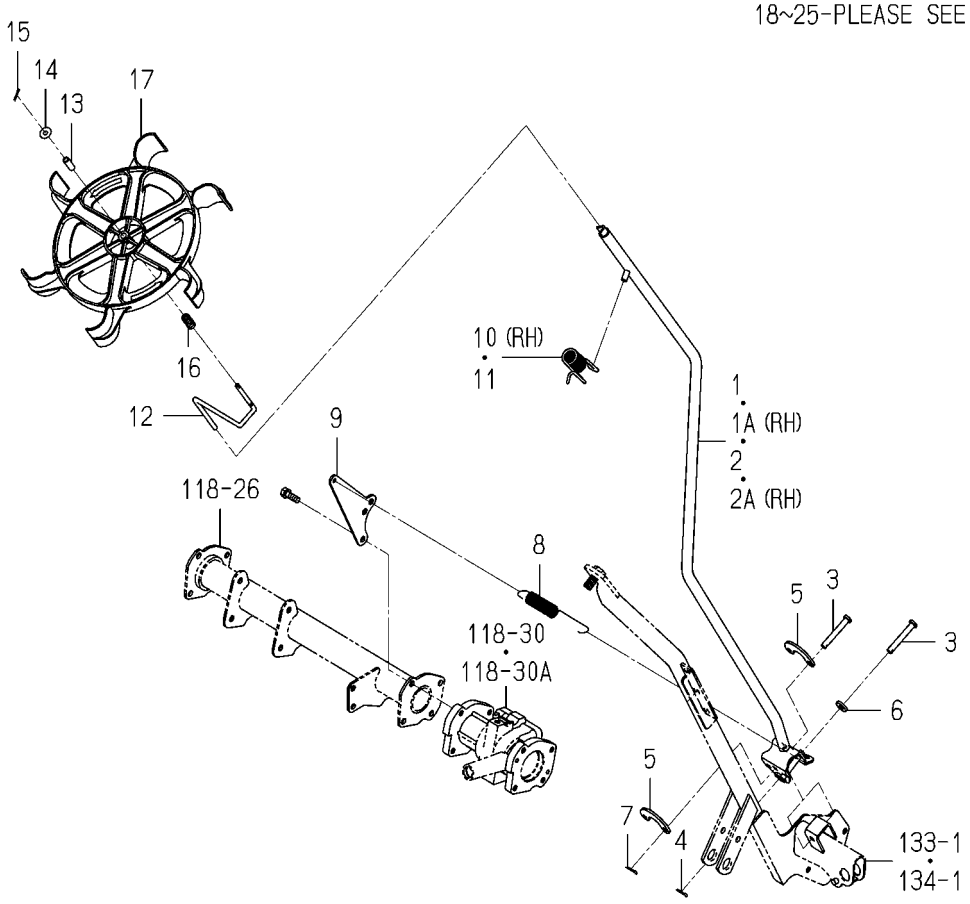

2213-711T-0100

KEY	PART CODE	DESCRIPTION	SPC	TYPE OF MODEL PZ80E16		ITC	COL	GRP	REMARKS
1	2213-711-380-20	CHBE/MARKER/LH/ COMP	*	1 -101649					
1A	2213-711-380-30	CHBE/MARKER/LH/ COMP	*	1 101650-		1			
2	2213-711-390-20	CHBE/MARKER/RH/ COMP	*	1 -101649					
2A	2213-711-390-30	CHBE/MARKER/RH/ COMP	*	1 101650-		1			
3	3680-155-004-00	PIN/08X55	*	6					
4	V500-163-001-50	PIN,SPLIT/3 X15	*	4					
5	2213-711-011-00	STAY/CABLEHOOK	*	4					
6	4148-204-005-00	WASHER/08X19X03	*	2					
7	V500-163-001-50	PIN,SPLIT/3 X15	*	2					
8	2213-711-006-00	SPRING/HE140	*	2					
9	2213-711-002-00	PLATE/MARKERSPRING	*	2					
10	2204-711-022-00	SPRING/MAKER/RH	*	1					
11	2204-711-023-00	SPRING/MAKER/LH	*	1					
12	2204-711-027-00	ROD/WATERWHEEL MARKE	*	2					
13	2183-526-001-10	HUB,MARKER	*	2					
14	3560-503-302-00	WASHER,WIRE TENSION	*	6					
15	2186-707-001-00	PIN,COTTER/2.5X15/SU	*	2					
16	2186-707-006-00	SPRING/HC029	*	2					
17	2163-526-001-20	MARKER,LINED/PGP	*	2					
18	2204-711-200-40	BASE/MOTOR COMP	*	1					
19	V211-360-801-60	BOLT,SEMS (SP)	*	2					
20	2213-711-210-10	ARM/ELECTRIC MARKER/	*	1 -102165					
20A	2213-711-210-20	ARM/ELECTRIC MARKER/	*	1 102166-		3			
21	2213-711-220-10	ARM/ELECTRIC MARKER/	*	1 -102165					
21A	2213-711-220-20	ARM/ELECTRIC MARKER/	*	1 102166-		3			
22	3560-202-021-00	WASHER,CONN ROD	*	2					
23	V500-163-002-50	PIN,SPLIT/3 X25	*	2					
24	V600-350-620-00	BEARING/BALL	*	2 100001-					
25	2151-420-011-00	WASHER/11X18X02	*	2 -102165					
25A	V704-140-010-00	RING,SNAP/10 C	*	2 102166-					

FIG.141 MARKER SYSTEM(2/2)

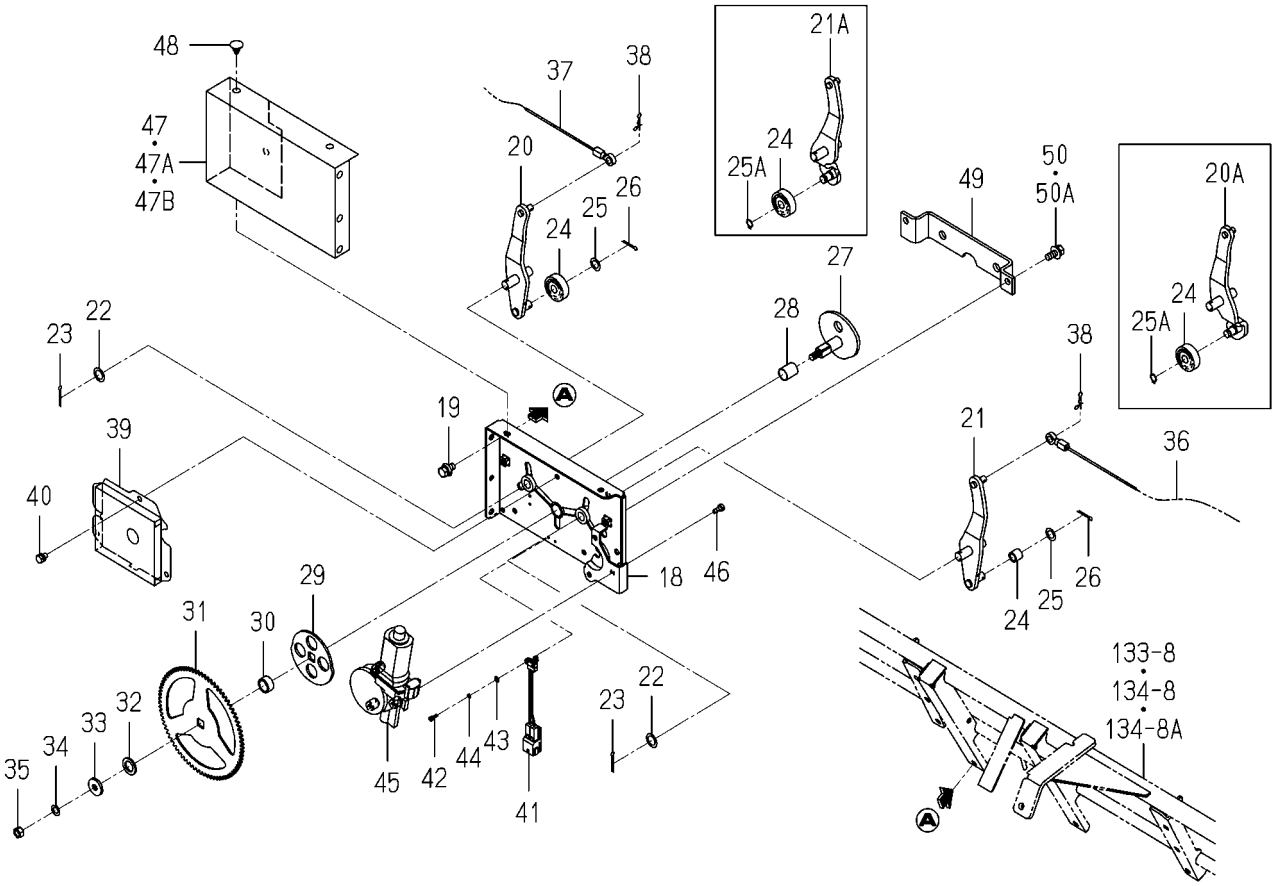

2213-711T-0100

KEY	PART CODE	DESCRIPTION	SPC	TYPE OF MODEL PZ80E16		ITC	COL	GRP	REMARKS
26	V500-163-002-00	PIN,SPLIT/3 X20	*	2 -102165					
27	2204-711-230-10	CAM/ELECTRIC MARKER	*	1					
28	P103-121-012-00	BUSH/15X17X20	*	1					
29	2204-711-002-00	CAM/SWITCH	*	1					
30	2204-711-003-00	COLLAR/15X20X10	*	1					
31	2204-711-011-00	GEAR/AUTO-MARKER	*	1					
32	3517-205-007-00	WASHER	*	1					
33	2130-407-003-00	WASHER	*	1					
34	V401-160-008-00	WASHER,SP/M 8	*	1					
35	V304-260-008-00	NUT	*	1					
36	2213-711-300-00	CABLE/MARKER/8/LH	*	1					
37	2213-711-310-10	CABLE/MARKER/8/RH	*	1					
38	2161-735-006-00	PIN	*	2					
39	2204-711-018-10	PLATE/COVER/MARKER	*	1					
40	V210-260-601-00	BOLT/S M6X10	*	3					
41	2204-618-004-10	SWICTH	*	2					
42	2513-801-053-00	BOLT	*	2					
43	V411-260-003-00	WASHER/M3	*	2 100001-					
44	V401-160-003-00	WASHER,SP/M 3	*	2 -102399					
45	2194-543-200-00	MOTER	*	1					
46	V200-260-501-20	BOLT/M 5X12	*	3					
47	2204-711-025-10	COVER/AUTO-MARKER	*	1 -100472					
47A	2204-711-025-20	COVER/MARKER	*	1 -101649		1			
47B	2204-711-025-30	COVER/POWER TRAIN MA	*	1 101650-		1			
48	1566-705-006-00	CAP/08	*	5					
49	2204-711-033-20	PLATE/SUPPORT/MARKER	*	1					
50	V211-260-801-60	BOLT,SEMS (S) M8X16	*	2 -101726					
50A	V211-360-802-00	BOLT/SP	*	2 101727-					

FIG.142 STAND SYSTEM

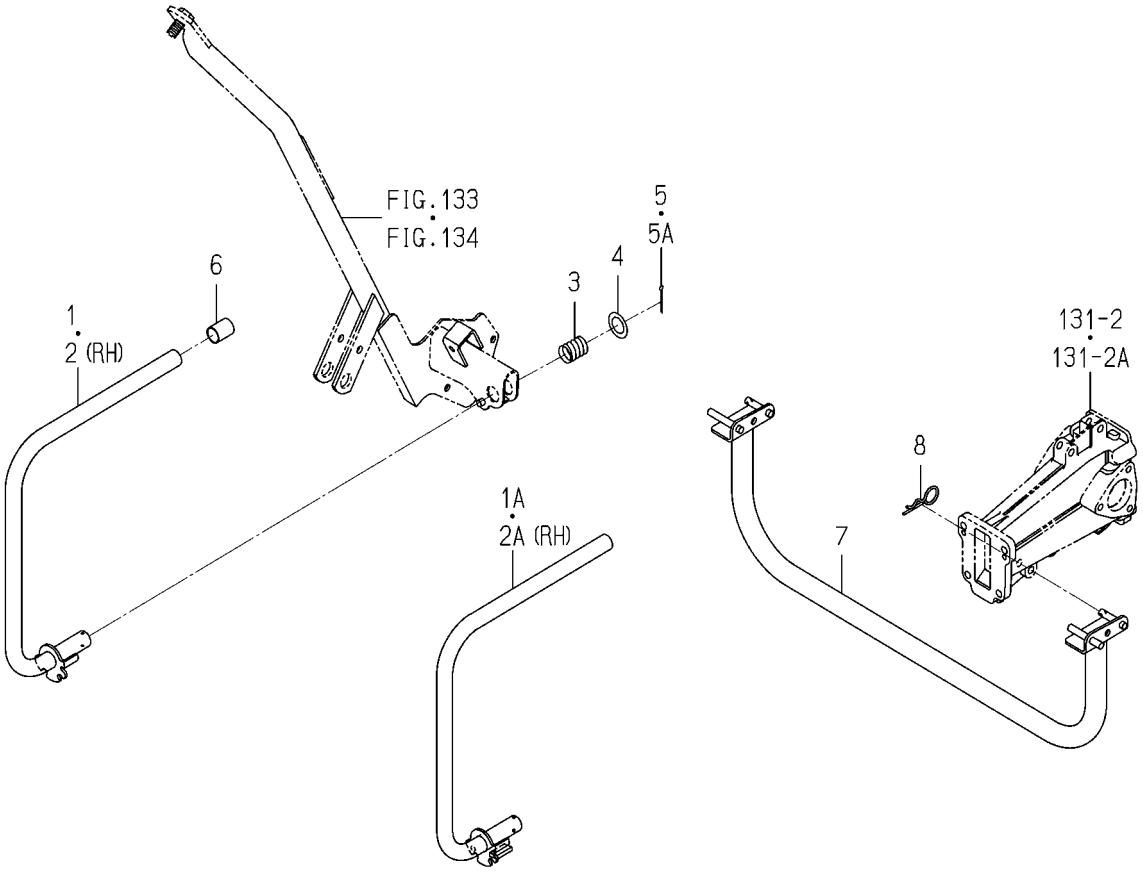

2213-713 -0100

KEY	PART CODE	DESCRIPTION	SPC	TYPE OF MODEL PZ80E16		ITC	COL	GRP	REMARKS
1	2213-711-260-10	GUARD/FRONT PLATE/LH	*	1 -101649					
1A	2213-711-260-20	GUARD/FRONT PLATE/LH	*	1 101650-		1			
2	2213-711-270-10	GUARD/FRONT PLATE/RH	*	1 -101649					
2A	2213-711-270-20	GUARD/FRONT PLATE/RH	*	1 101650-		1			
3	2137-450-003-00	SPRING	*	2					
4	4138-406-004-00	WASHER/20X32X01	*	2					
5	V500-163-003-00	PIN,SPLIT/3X30	*	2 -102211					
5A	V500-163-002-50	PIN,SPLIT/3 X25	*	2 102212-					
6	2204-711-024-00	CAP/STAND	*	2					
7	2213-713-200-10	STAND COMP	*	1					
8	7957-405-003-00	PIN/HAIR	*	2					

FIG.143 PLANTER(LH)SYSTEM

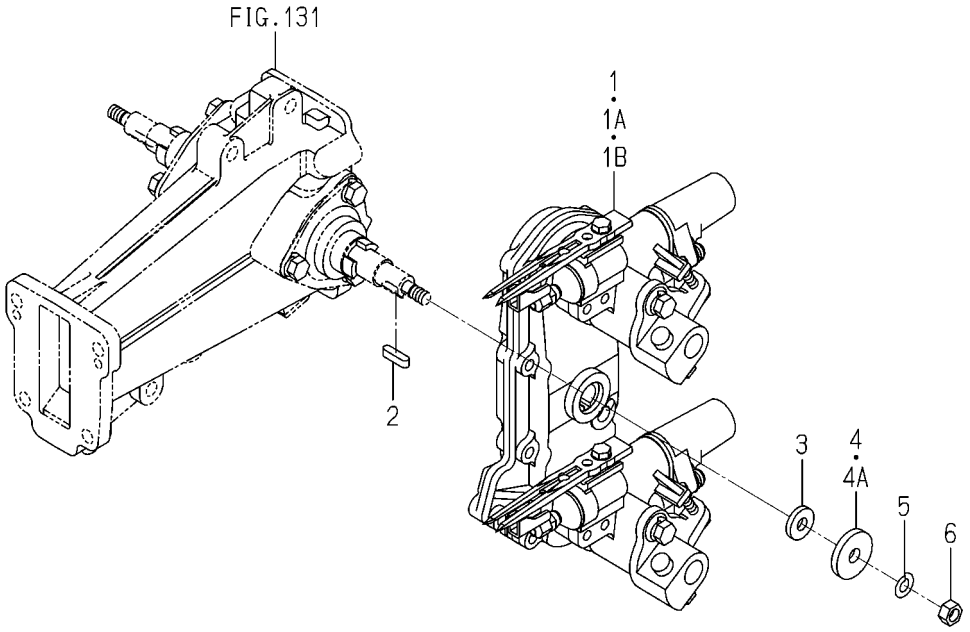

2213-738K-0100

KEY	PART CODE	DESCRIPTION	SPC	TYPE OF MODEL PZ80E16		ITC	COL	GRP	REMARKS
1	2204-738-400-20	ROTARY PLANTING/K/LH	*	4 -102175					FIG 193
1A	2204-738-400-80	ROTARY PLANTING/K/LH	*	4 -102349		1			FIG 193
1B	2204-738-440-00	ROTARY PLANTING/K/LH	*	4 102350-					FIG 194
2	3750-231-013-00	KEY,SPROCKET	*	4					
3	2142-736-203-10	PACKING	*	4					
4	3740-314-017-00	WASHER,TENSION	*	4 -101649					
4A	2132-161-005-00	WASHER,PULLEY	*	4 101650-					
5	V401-160-008-00	WASHER,SP/M 8	*	4					
6	V304-460-008-00	NUT/M8	*	4					

FIG.144 PLANTER(RH)SYSTEM

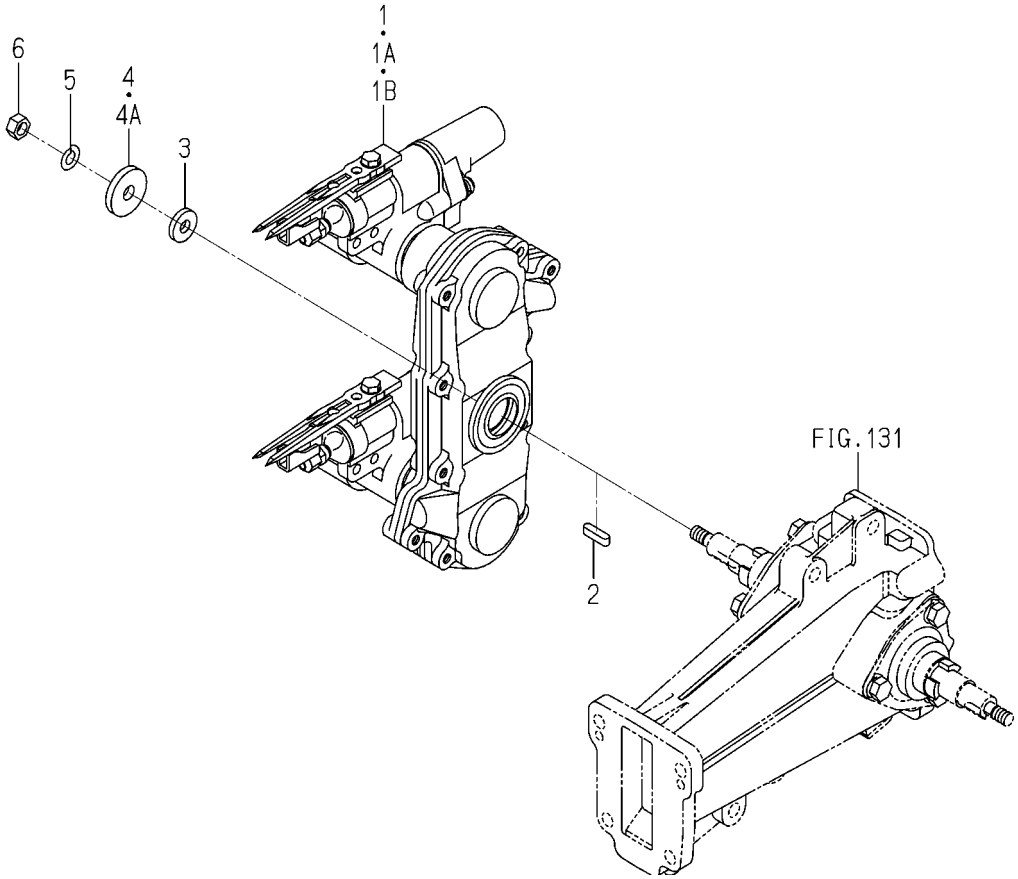

2213-739K-0100

KEY	PART CODE	DESCRIPTION	SPC	TYPE OF MODEL PZ80E16		ITC	COL	GRP	REMARKS
1	2204-739-400-20	ROTARY PLANTING/K/RH	*	4 -102175					FIG 195
1A	2204-739-400-80	ROTARY PLANTING/K/RH	*	4 -102349		1			FIG 195
1B	2204-739-440-00	ROTARYPLANTING/K/RH	*	4 102350-					FIG 196
2	3750-231-013-00	KEY,SPROCKET	*	4					
3	2142-736-203-10	PACKING	*	4					
4	3740-314-017-00	WASHER,TENSION	*	4 -101649					
4A	2132-161-005-00	WASHER,PULLEY	*	4 101650-					
5	V401-160-008-00	WASHER,SP/M 8	*	4					
6	V304-460-008-00	NUT/M8	*	4					

FIG.145 TANK(1/3) (SEEDLING)SYSTEM(NO.100001-101649)

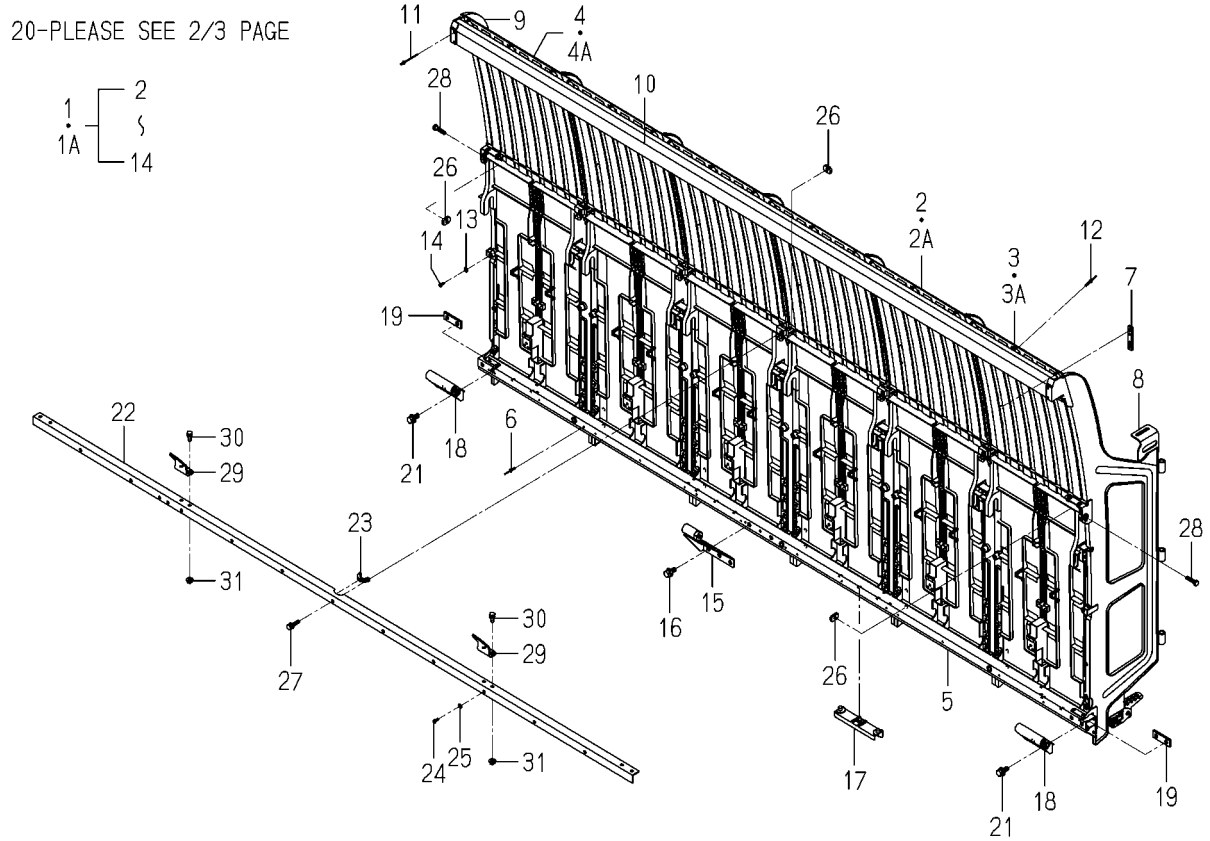

2213-801 -0100

KEY	PART CODE	DESCRIPTION	SPC	TYPE OF MODEL PZ80E16		ITC	COL	GRP	REMARKS
1	2213-801-200-00	SEEDLING TANK/CENTER	*	1 -101046					
1A	2213-801-200-10	SEEDLING TANK/CENTER	*	1 -101649		1			
2	2161-831-201-50	TANK	*	4 -101046					
2A	2161-831-201-60	TANK	*	4 -101649		1			
3	2162-831-201-40	SEEDING TANK/LH	*	1 -101046					
3A	2162-831-201-50	TANK/LH	*	1 -101649		1			
4	2162-831-202-40	SEEDING TANK/RH	*	1 -101046					
4A	2162-831-202-50	TANK/RH	*	1 -101649		1			
5	2213-801-210-00	RAIL(CENTER/LOWER/8)	*	1 -101649					
6	2130-802-208-00	RIVET,POP	*	30 -101649					
7	2161-834-004-00	PLATE	*	10 -101649					
8	2213-801-230-00	FENCE/LH/PZ/SUB COMP	*	1 -101649					
9	2213-801-240-00	FENCE/RH/PZ/SUB COMP	*	1 -101649					
10	2172-831-203-30	RAIL/SEEDINGUPPER/1	*	1 -101649					
11	2172-831-005-00	RIVET/STEM/3.2X	*	14 -101649					
12	2161-831-209-00	B-RIVET/ALMI	*	18 -101649					
13	V411-260-004-00	WASHER,PL/M 4	*	2 -101649					
14	2161-831-211-00	PIN, TAPPING	*	2 -101649					
15	2204-801-220-00	ARM,SEEDING-TANK	*	1 -101649					
16	V211-360-802-00	BOLT/SP	*	2 -101649					
17	2161-831-003-10	SLIDER PLATE(E12)	*	4 -101649					
18	2190-801-002-00	ARM,SEEDING TANK/8/I	*	2 -101649					
19	2162-831-003-00	PLATE,RAIL/OUTER	*	2 -101649					
20	2162-831-033-00	PIN,KNOCKED	*	2 -101649					
21	V211-360-802-00	BOLT/SP	*	4 -101649					
22	2162-831-004-10	RAIL/SEEDLING TANK/C	*	1 -101649					
23	2186-801-001-00	GROMMET/20/SEEDING T	*	1 -101649					
24	2161-831-211-00	PIN, TAPPING	*	6 -101649					
25	V411-260-004-00	WASHER,PL/M 4	*	6 -101649					
26	2161-831-007-00	PLATE	*	7 -101649					

FIG.145 TANK(2/3)
(SEEDLING)SYSTEM(NO.100001-101649)

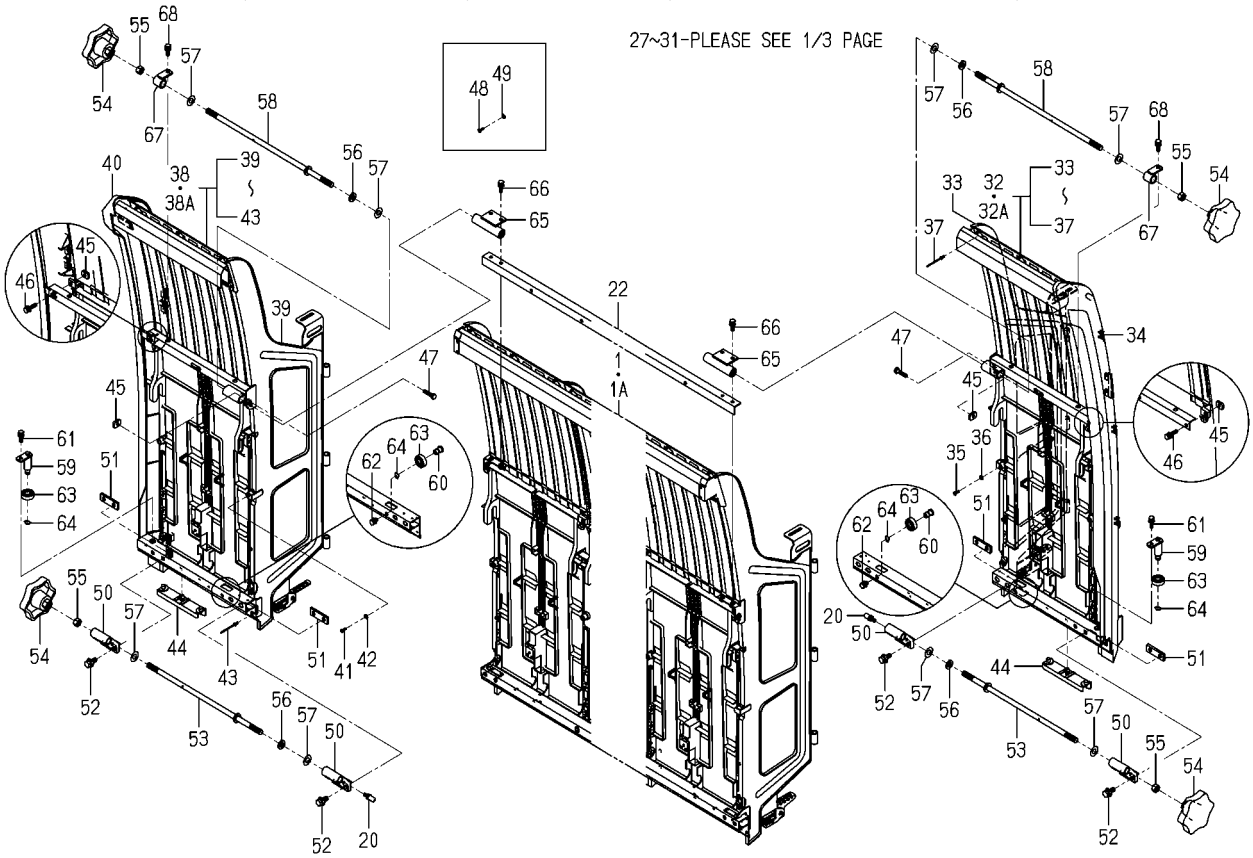

2213-801 -0100

KEY	PART CODE	DESCRIPTION	SPC	TYPE OF MODEL PZ80E16		ITC	COL	GRP	REMARKS
27	V210-360-602-50	BOLT/SP	*	5 -101649					
28	V200-260-602-50	BOLT/M 6X25	*	2 -101649					
29	2204-801-005-00	PLATE	*	2 -101649					
30	V210-260-601-60	BOLT/S	*	4 -101649					
31	V360-260-006-00	NUT/M6	*	4 -101649					
32	2213-801-250-00	SEEDLING TANK/LH/8	*	1 -101046					
32A	2213-801-250-10	SEEDLING TANK/LH/8	*	1 -101649		1			
33	2213-801-260-00	FENCE/OUTER/LH/ COMP	*	1 -101649					
34	2204-801-201-00	COVER/SEEDING-TANK/P	*	1 -101649					
35	2161-831-211-00	PIN, TAPPING	*	4 -101649					
36	V411-260-004-00	WASHER,PL/M 4	*	3 -101649					
37	2172-831-005-00	RIVET/STEM/3.2X	*	4 -101649					
38	2213-801-270-00	SEEDLING TANK/RH/8	*	1 -101046					
38A	2213-801-270-10	SEEDLING TANK/RH/8	*	1 -101649		1			
39	2213-801-280-00	FENCE/OUTER/RH/ COMP	*	1 -101649					
40	2204-801-202-00	COVER/SEEDING-TANK/P	*	1 -101649					
41	2161-831-211-00	PIN, TAPPING	*	4 -101649					
42	V411-260-004-00	WASHER,PL/M 4	*	3 -101649					
43	2172-831-005-00	RIVET/STEM/3.2X	*	4 -101649					
44	2161-831-003-10	SLIDER PLATE(E12)	*	2 -101649					
45	2161-831-007-00	PLATE	*	4 -101649					
46	V210-360-602-50	BOLT/SP	*	2 -101649					
47	V200-260-602-50	BOLT/M 6X25	*	2 -101649					
48	2161-831-211-00	PIN, TAPPING	*	2 -101649					
49	V411-260-004-00	WASHER,PL/M 4	*	2 -101649					
50	2162-831-002-00	ARM/SEEDING TANK/8/O	*	4 -101649					
51	2162-831-003-00	PLATE,RAIL/OUTER	*	4 -101649					
52	V211-360-802-00	BOLT/SP	*	8 -101649					
53	2190-801-240-00	GRIP	*	2 -101649					
54	1381-301-001-00	KNOB,HANDLE	*	4 -101649					

FIG.145 TANK(3/3)
(SEEDLING)SYSTEM(NO.100001-101649)

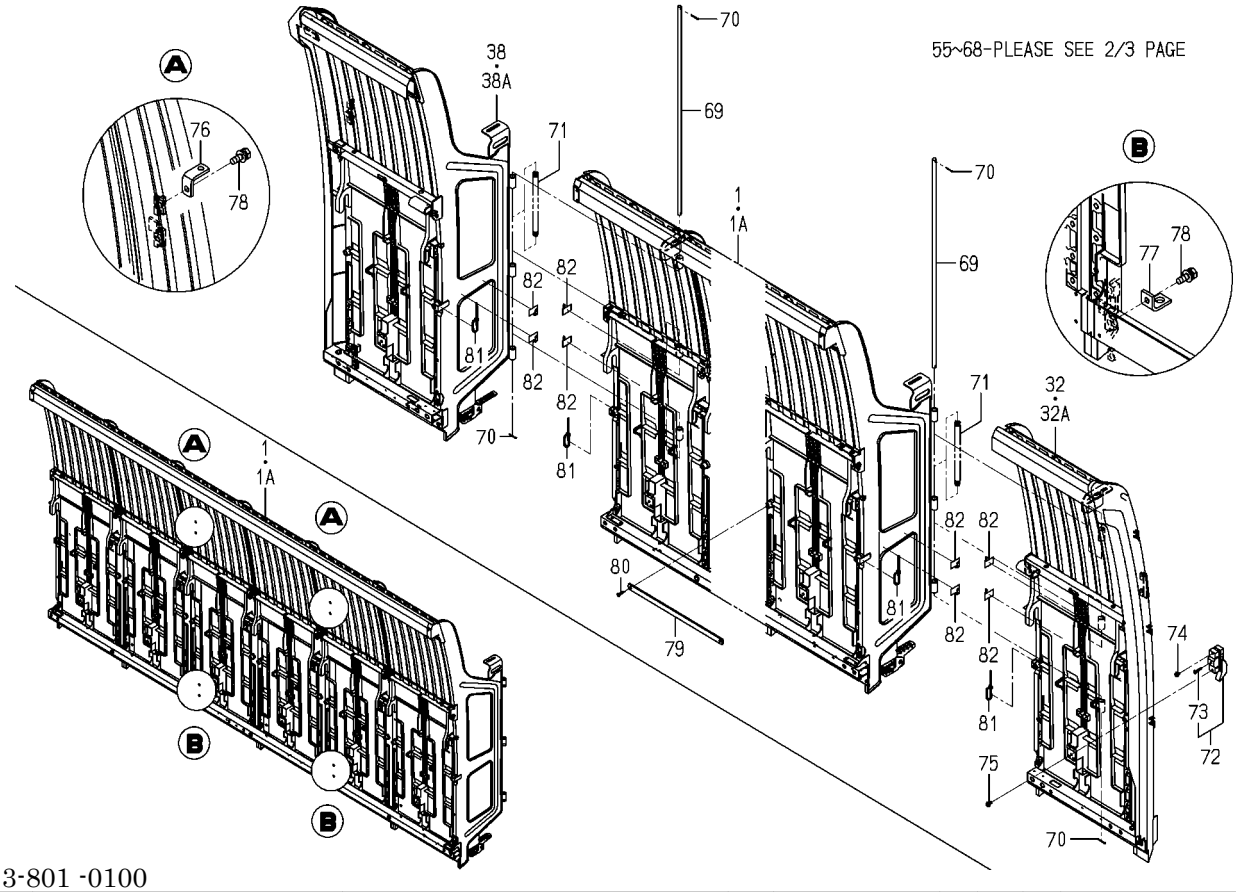

2213-801 -0100

KEY	PART CODE	DESCRIPTION	SPC	TYPE OF MODEL PZ80E16		ITC	COL	GRP	REMARKS
55	V304-260-010-00	NUT	*	4 -101649					
56	V401-160-010-00	WASHER,SP/M10	*	4 -101649					
57	V411-260-010-00	WASHER/M10	*	8 -101649					
58	2162-831-350-00	ROD,JOINT/ARM	*	2 -101649					
59	2162-831-360-00	PIN,RAIL/LOWER/OUTER	*	2 -101649					
60	2162-831-032-00	PIN/BEARING/FRONT PL	*	2 -101649					
61	V210-360-602-00	BOLT/SP	*	2 -101649					
62	V210-360-601-20	BOLT,SEMS	*	2 -101649					
63	V600-150-600-00	BEARING	*	4 -101649					
64	V704-140-010-00	RING,SNAP/10 C	*	4 -101649					
65	2162-831-250-00	NUT, HOLDER	*	2 -101649					
66	V210-360-602-00	BOLT/SP	*	4 -101649					
67	2162-831-370-00	PLATE,STOPPER	*	2 -101649					
68	V210-360-602-00	BOLT/SP	*	2 -101649					
69	2162-801-009-10	PIN	*	2 -101649					
70	V500-162-501-50	PIN,SPLIT/2.5X15	*	4 -101649					
71	2151-420-008-00	SPRING/HC193	*	2 -101649					
72	2132-801-220-10	SWITCH ASSY	*	8 -101649					
73	V195-102-504-40	SCREW/TAPPING	*	8 -101649					
74	V120-364-000-80	SCREW/SP	*	8 -101649					
75	V120-364-001-20	SCREW,SP/M4X12	*	8 -101649					
76	2161-834-012-00	PLATE	*	2 -101649					
77	2161-834-007-00	PLATE	*	2 -101649					
78	V210-360-602-00	BOLT/SP	*	4 -101649					
79	2186-805-026-00	PLATE/1R/13X280	*	8 -101649					
80	V195-164-016-10	SCREW/TAPPING	*	16 -101649					
81	2132-545-008-00	WIRE BAND(92)	*	4 -101649					
82	1426-621-038-00	CLAMP,HARNESS	*	8 -101649					

FIG.146 TANK(SEEDLING)SYSTEM(NO.101650-)(1/3)

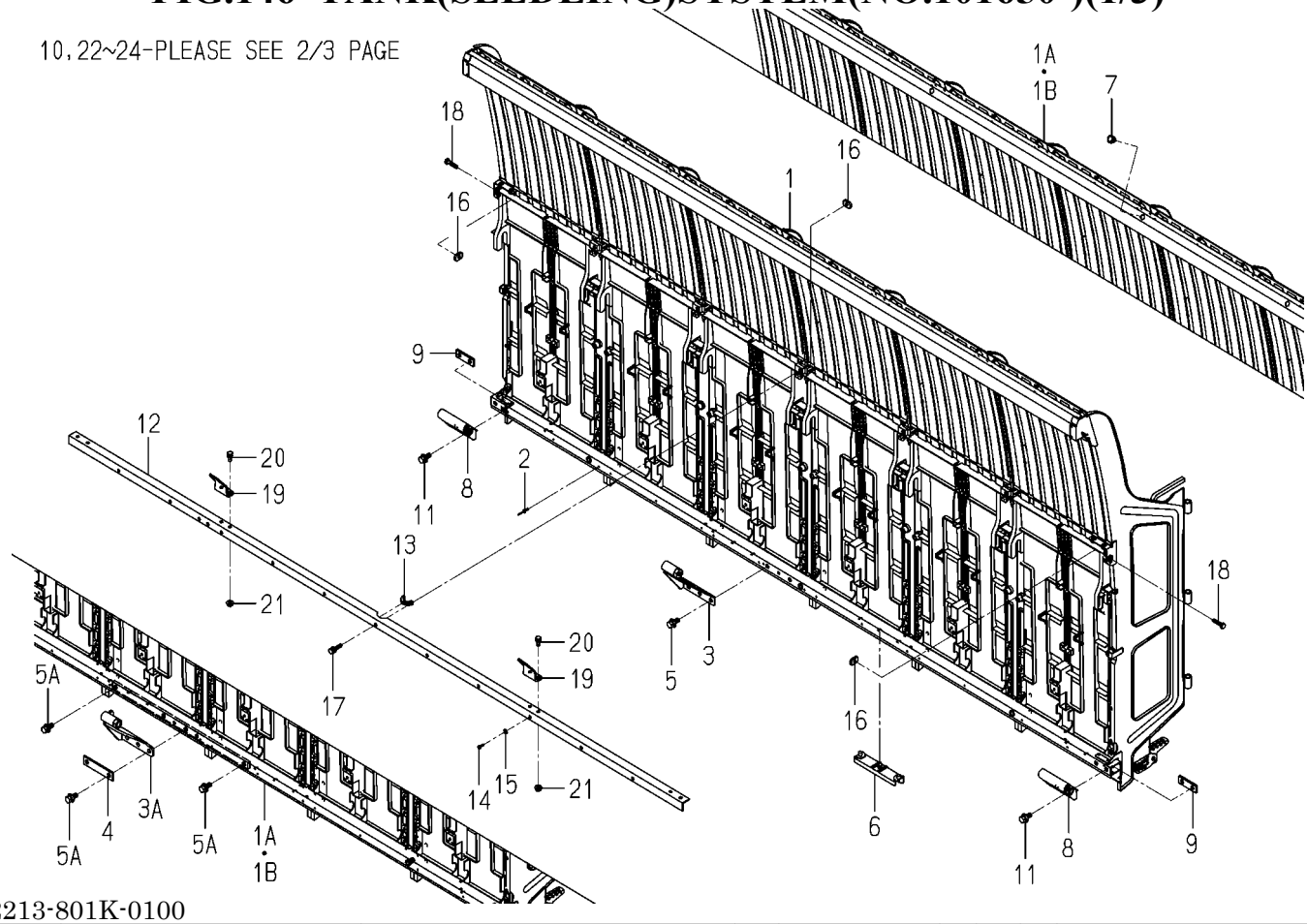

2213-801K-0100

KEY	PART CODE	DESCRIPTION	SPC	TYPE OF MODEL PZ80E16		ITC	COL	GRP	REMARKS
1	2213-801-310-10	SEEDLING TANK/CENTER	*	1 -102165		1			
1A	2213-801-310-30	SEEDLING TANK/CENTER	*	1 -102399		3			
1B	2213-801-310-40	SEEDLING TANK/CENTER	*	1 102400-		1			
2	2130-802-208-00	RIVET,POP	*	30 101650-					
3	2204-801-220-00	ARM,SEEDING-TANK	*	1 -102165					
3A	2213-801-740-00	ARM/SEEDLING TANK/8E	*	1 102166-					
4	2213-801-071-00	PLATE/19X85	*	1 102166-					
5	V211-360-802-00	BOLT/SP	*	2 -102165					
5A	V211-360-802-00	BOLT/SP	*	4 102166-					
6	2161-831-003-10	SLIDER PLATE(E12)	*	4 101650-					
7	2186-738-038-20	CAP/10	*	4 102166-					
8	2190-801-002-00	ARM,SEEDING TANK/8/I	*	2 101650-					
9	2162-831-003-00	PLATE,RAIL/OUTER	*	2 101650-					
10	2162-831-033-00	PIN,KNOCKED	*	2 101650-					
11	V211-360-802-00	BOLT/SP	*	4 101650-					
12	2162-831-004-10	RAIL/SEEDLING TANK/C	*	1 101650-					
13	2186-801-001-00	GROMMET/20/SEEDING T	*	1 101650-					
14	2161-831-211-00	PIN, TAPPING	*	6 101650-					
15	V411-260-004-00	WASHER,PL/M 4	*	6 101650-					
16	2161-831-007-00	PLATE	*	7 101650-					
17	V210-360-602-50	BOLT/SP	*	5 101650-					
18	V200-260-602-50	BOLT/M 6X25	*	2 101650-					
19	2204-801-005-00	PLATE	*	2 101650-					
20	V210-260-601-60	BOLT/S	*	4 101650-					
21	V360-260-006-00	NUT/M6	*	4 101650-					
22	2213-801-340-10	SEEDLING TANK/LH/8K	*	1 -102165		1			
22A	2213-801-340-20	SEEDLING TANK/LH/8K	*	1 -102399		3			
22B	2213-801-340-30	SEEDLING TANK/LH/8K	*	1 102400-		1			
23	2130-802-208-00	RIVET,POP	*	3 101650-					
24	2213-801-360-10	SEEDLING TANK/RH/8K	*	1 -102165		1			

FIG.146 TANK(SEEDLING)SYSTEM(NO.101650-)(2/3)

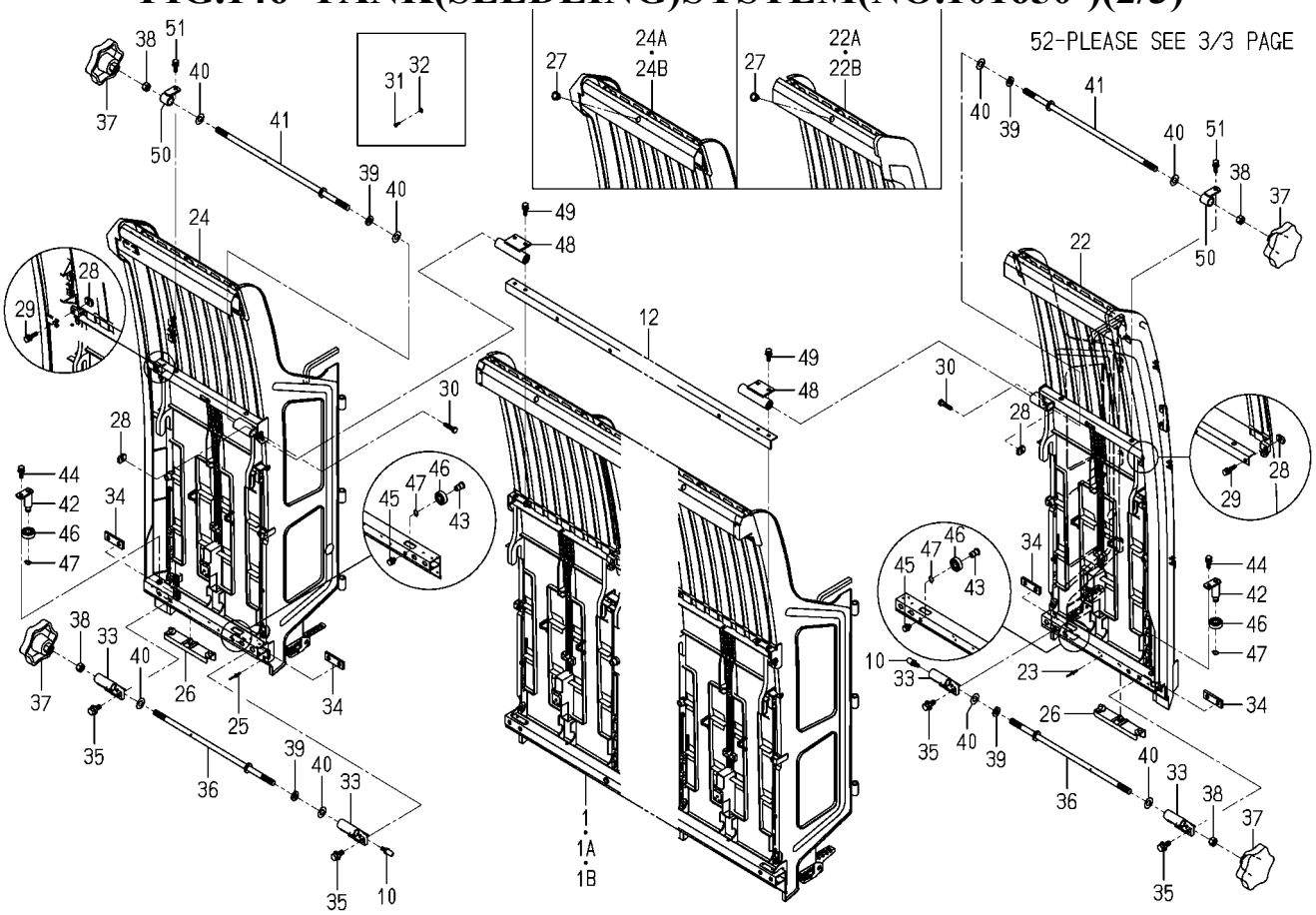

2213-801K-0100

KEY	PART CODE	DESCRIPTION	SPC	TYPE OF MODEL PZ80E16		ITC	COL	GRP	REMARKS
24A	2213-801-360-20	SEEDLING TANK/RH/8K	*	1 -102399		3			
24B	2213-801-360-30	SEEDLING TANK/RH/8K	*	1 102400-		1			
25	2130-802-208-00	RIVET,POP	*	3 101650-					
26	2161-831-003-10	SLIDER PLATE(E12)	*	2 101650-					
27	2186-738-038-20	CAP/10	*	2 102166-					
28	2161-831-007-00	PLATE	*	4 101650-					
29	V210-360-602-50	BOLT/SP	*	2 101650-					
30	V200-260-602-50	BOLT/M 6X25	*	2 101650-					
31	2161-831-211-00	PIN, TAPPING	*	2 101650-					
32	V411-260-004-00	WASHER,PL/M 4	*	2 101650-					
33	2162-831-002-00	ARM/SEEDING TANK/8/O	*	4 101650-					
34	2162-831-003-00	PLATE,RAIL/OUTER	*	4 101650-					
35	V211-360-802-00	BOLT/SP	*	8 101650-					
36	2190-801-240-00	GRIP	*	2 101650-					
37	1381-301-001-00	KNOB,HANDLE	*	4 101650-					
38	V304-260-010-00	NUT	*	4 101650-					
39	V401-160-010-00	WASHER,SP/M10	*	4 101650-					
40	V411-260-010-00	WASHER/M10	*	8 101650-					
41	2162-831-350-00	ROD,JOINT/ARM	*	2 101650-					
42	2162-831-360-00	PIN,RAIL/LOWER/OUTER	*	2 101650-					
43	2162-831-032-00	PIN/BEARING/FRONT PL	*	2 101650-					
44	V210-360-602-00	BOLT/SP	*	2 101650-					
45	V210-360-601-20	BOLT,SEMS	*	2 101650-					
46	V600-150-600-00	BEARING	*	4 101650-					
47	V704-140-010-00	RING,SNAP/10 C	*	4 101650-					
48	2162-831-250-00	NUT, HOLDER	*	2 101650-					
49	V210-360-602-00	BOLT/SP	*	4 101650-					
50	2162-831-370-00	PLATE,STOPPER	*	2 101650-					
51	V210-360-602-00	BOLT/SP	*	2 101650-					
52	2162-801-009-10	PIN	*	2 101650-					

FIG.146 TANK(SEEDLING)SYSTEM(NO.101650-)(3/3)

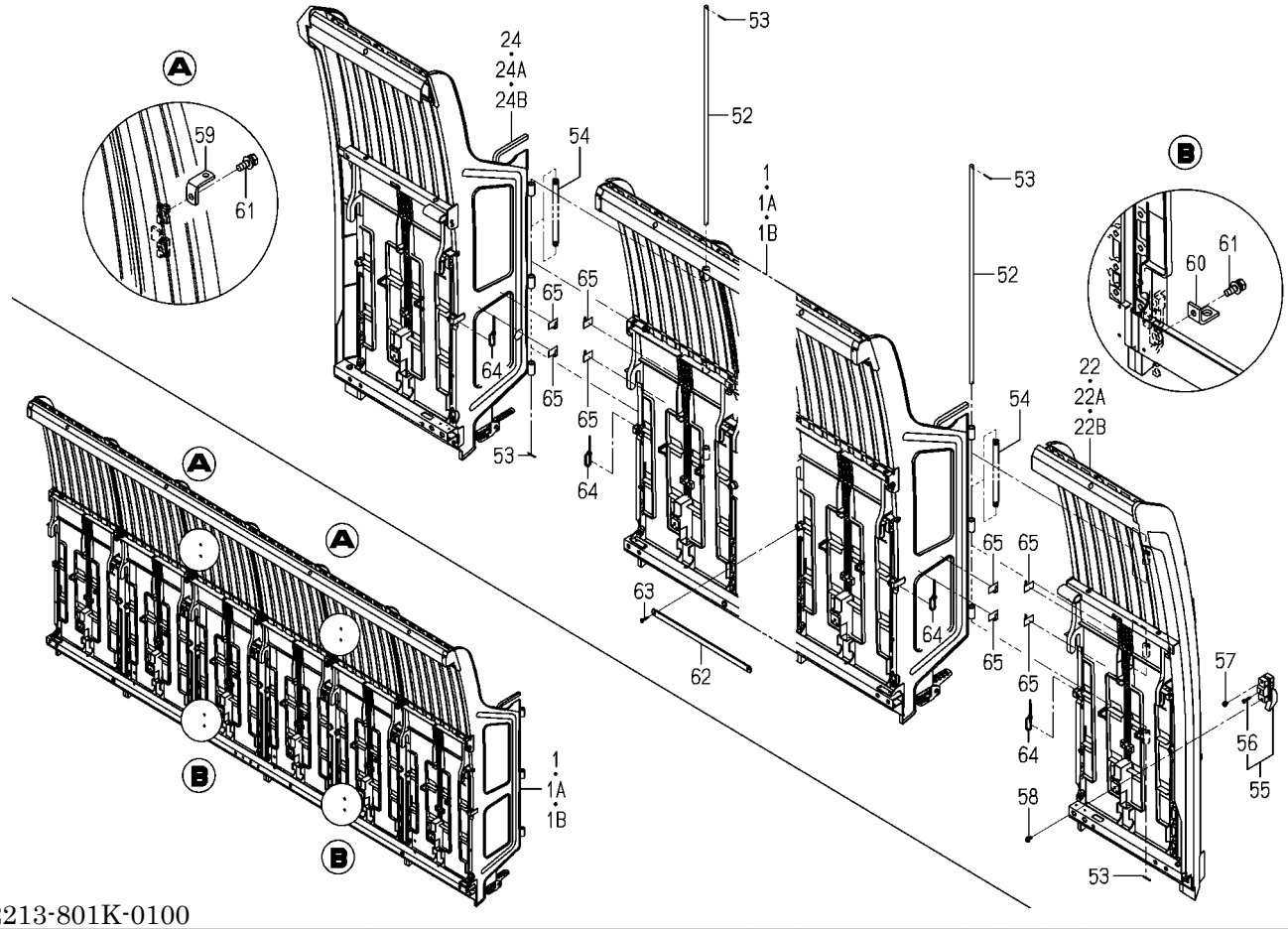

2213-801K-0100

KEY	PART CODE	DESCRIPTION	SPC	TYPE OF MODEL PZ80E16		ITC	COL	GRP	REMARKS
53	V500-162-501-50	PIN,SPLIT/2.5X15	*	4 101650-					
54	2151-420-008-00	SPRING/HC193	*	2 101650-					
55	2132-801-220-10	SWITCH ASSY	*	8 101650-					
56	V195-102-504-40	SCREW/TAPPING	*	8 101650-					
57	V120-364-000-80	SCREW/SP	*	8 101650-					
58	V120-364-001-20	SCREW,SP/M4X12	*	8 101650-					
59	2161-834-012-00	PLATE	*	2 101650-					
60	2161-834-007-00	PLATE	*	2 101650-					
61	V210-360-602-00	BOLT/SP	*	4 101650-					
62	2186-805-026-00	PLATE/1R/13X280	*	8 101650-					
63	V195-164-016-10	SCREW/TAPPING	*	16 101650-					
64	2132-545-008-00	WIRE BAND(92)	*	4 101650-					
65	1426-621-038-00	CLAMP,HARNESS	*	8 101650-					

FIG.147 LAMP(TURN SIGNAL)SYSTEM

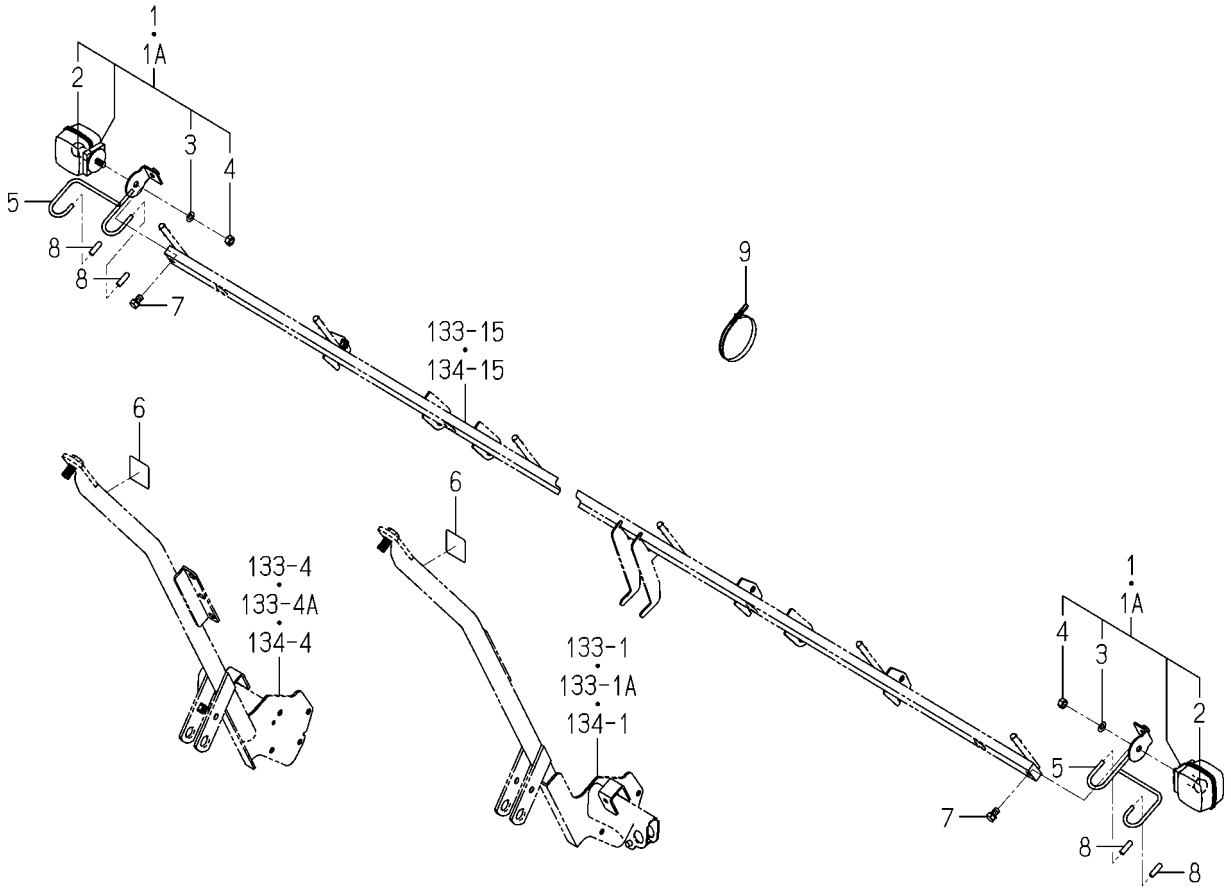

2213-802T-0100

KEY	PART CODE	DESCRIPTION	SPC	TYPE OF MODEL PZ80E16		ITC	COL	GRP	REMARKS
1	2132-544-200-00	LAMP/TURNSIGNAL ASSY	*	2 -102015					
1A	2132-544-200-10	LAMP/TURNSIGNAL ASSY	*	2 102016-		1			
2	1444-621-242-00	BULB/12V 20W	*	2					
3	V401-160-008-00	WASHER,SP/M 8	*	2					
4	V304-260-008-00	NUT	*	2					
5	2213-802-230-00	STAY/WINKER/8/T	*	2					
6	2194-901-016-00	LABEL/FRASH	*	2					
7	V211-260-801-20	BOLT,SEMS (S) M8X12	*	2					
8	4512-106-005-00	CAP/D6/YELLOW	*	4					
9	1342-402-006-00	BAND/WIRE/250	*	2					

FIG.148 PLATE(FRONT)SYSTEM(NO.100001-101649)

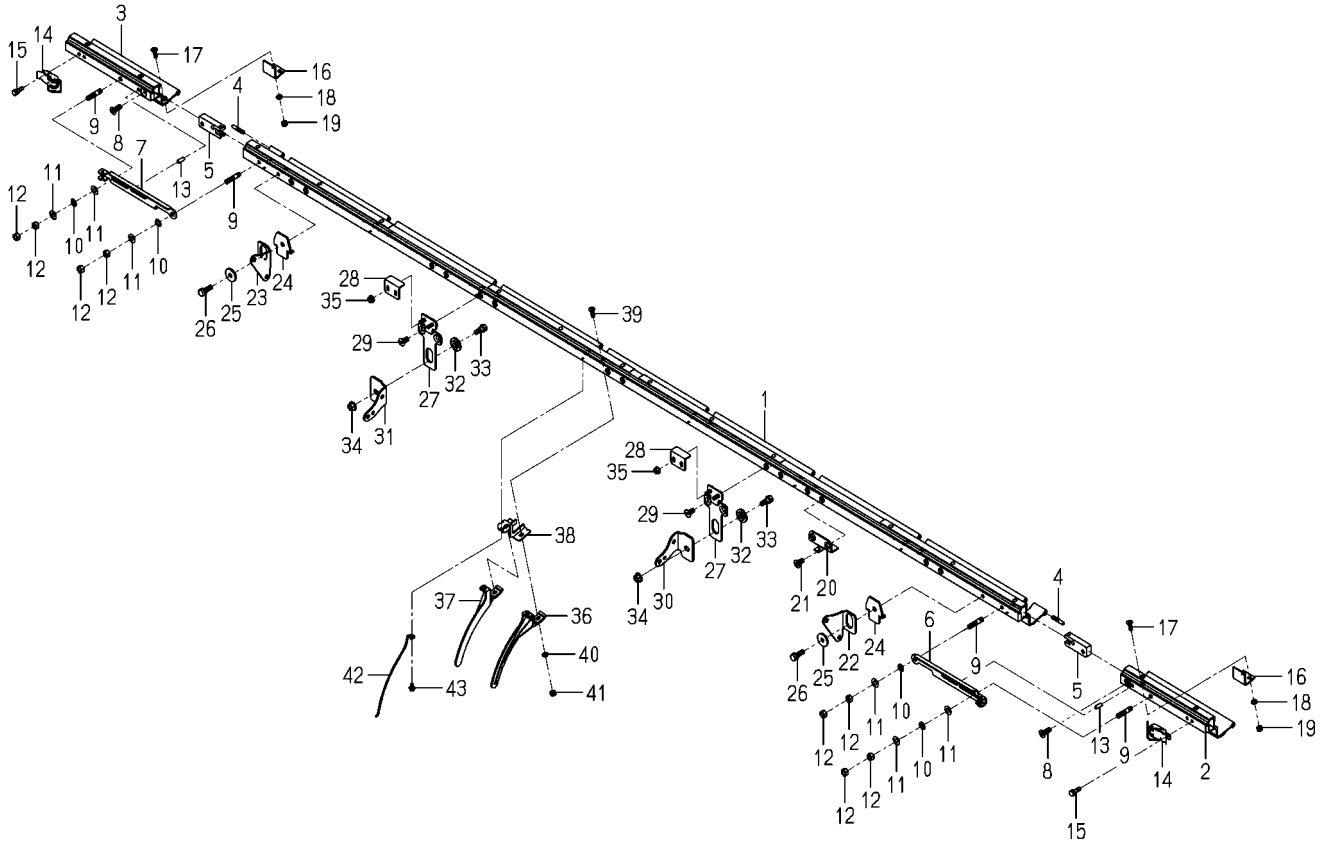

2213-803E-0100

KEY	PART CODE	DESCRIPTION	SPC	TYPE OF MODEL PZ80E16		ITC	COL	GRP	REMARKS
1	2213-803-240-00	RAIL NAE TANK/CENTER	*	1 -101649					
2	2213-803-210-10	FRONT PLATE/SIDE/LH	*	1 -101649					
3	2213-803-230-10	FRONT PLATE/SIDE/RH	*	1 -101649					
4	2162-833-001-00	PLATE	*	2 -101649					
5	2161-833-004-00	JOINT,F,SUB/PLATE	*	2 -101649					
6	2213-803-006-10	PLATE/RAIL/8RH	*	1 -101649					
7	2213-803-007-10	PLATE/RAIL/8LH	*	1 -101649					
8	V112-168-002-00	SCREW/M8X20	*	2 -101649					
9	V251-260-802-50	STUD/M 8X25	*	4 -101649					
10	3533-306-001-00	SPAC/M8	*	4 -101649					
11	V411-260-008-00	WASHER,PL/M 8	*	6 -101649					
12	V304-460-008-00	NUT/M8	*	8 -101649					
13	V522-100-601-60	PIN	*	2 -101649					
14	2157-508-230-00	CLAMP	*	2 -101649					
15	V210-260-602-00	BOLT/S	*	4 -101649					
16	2162-833-051-00	PLATE,CONNECTING	*	2 -101649					
17	V112-706-002-00	SCREW/FLAT	*	4 -101649					
18	V401-700-006-00	WASHER/LOCK	*	4 -101649					
19	V301-700-006-00	NUT	*	4 -101649					
20	2204-803-200-00	STAY/FRONT PLATE/OUT	*	5 -101649					
21	V112-168-001-60	SCREW/M8X16	*	10 -101649					
22	2204-803-034-00	PLATE	*	1 -101649					
23	2204-803-035-00	PLATE	*	1 -101649					
24	2204-803-037-10	PLATE/SLIDER/SUPPORT	*	2 -101649		1			
25	2139-807-005-00	COLLAR SLIDE METAL	*	2 -101649					
26	V211-260-802-50	BOLT/S	*	2 -101649					
27	2213-803-250-00	PLATE/SLIDER/8 COMP	*	2 -101649					
28	2213-803-009-00	PLATE/STOPPER/TANK/8	*	2 -101649					
29	2204-803-031-00	BOLT	*	4 -101649					
30	2213-803-001-00	STAY(SLIDER/RAIL_NAE	*	1 -101649					

FIG.148 PLATE(FRONT)SYSTEM(NO.100001-101649)

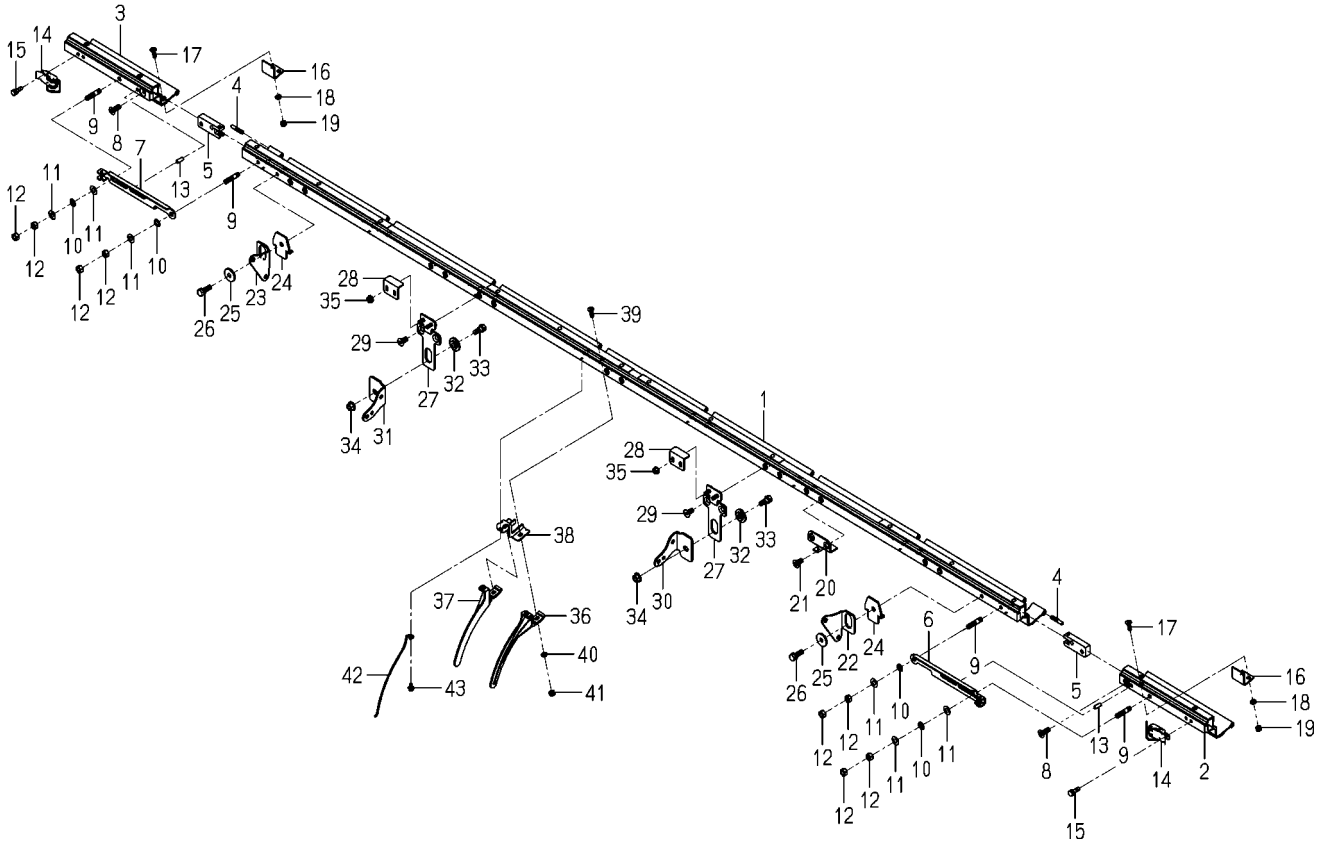

2213-803E-0100

KEY	PART CODE	DESCRIPTION	SPC	TYPE OF MODEL PZ80E16		ITC	COL	GRP	REMARKS
31	2213-803-002-00	STAY(SLIDER/RAIL_NAE	*	1 -101649					
32	2139-807-005-00	COLLAR SLIDE METAL	*	2 -101649					
33	V211-260-802-00	BOLT/S	*	2 -101649					
34	V362-260-008-00	NUT/WASHER	*	2 -101649					
35	V360-260-006-00	NUT/M6	*	4 -101649					
36	2204-803-015-10	GUIDE/SEEDLING/LH/PZ	*	8 -101649					
37	2204-803-016-10	GUIDE/SEEDLING/RH/PZ	*	8 -101649					
38	2213-803-005-00	PLATE/GUIDE/E12	*	8 -101649					
39	V112-706-002-00	SCREW/FLAT	*	16 -101649					
40	V401-700-006-00	WASHER/LOCK	*	16 -101649					
41	V301-700-006-00	NUT	*	16 -101649					
42	2204-803-025-00	WIRE,SEEDING GUIDE/P	*	8 -101649					
43	V120-365-001-20	SCREW/SP	*	8 -101649					

FIG.149 PLATE(FRONT)SYSTEM(NO.101650-)

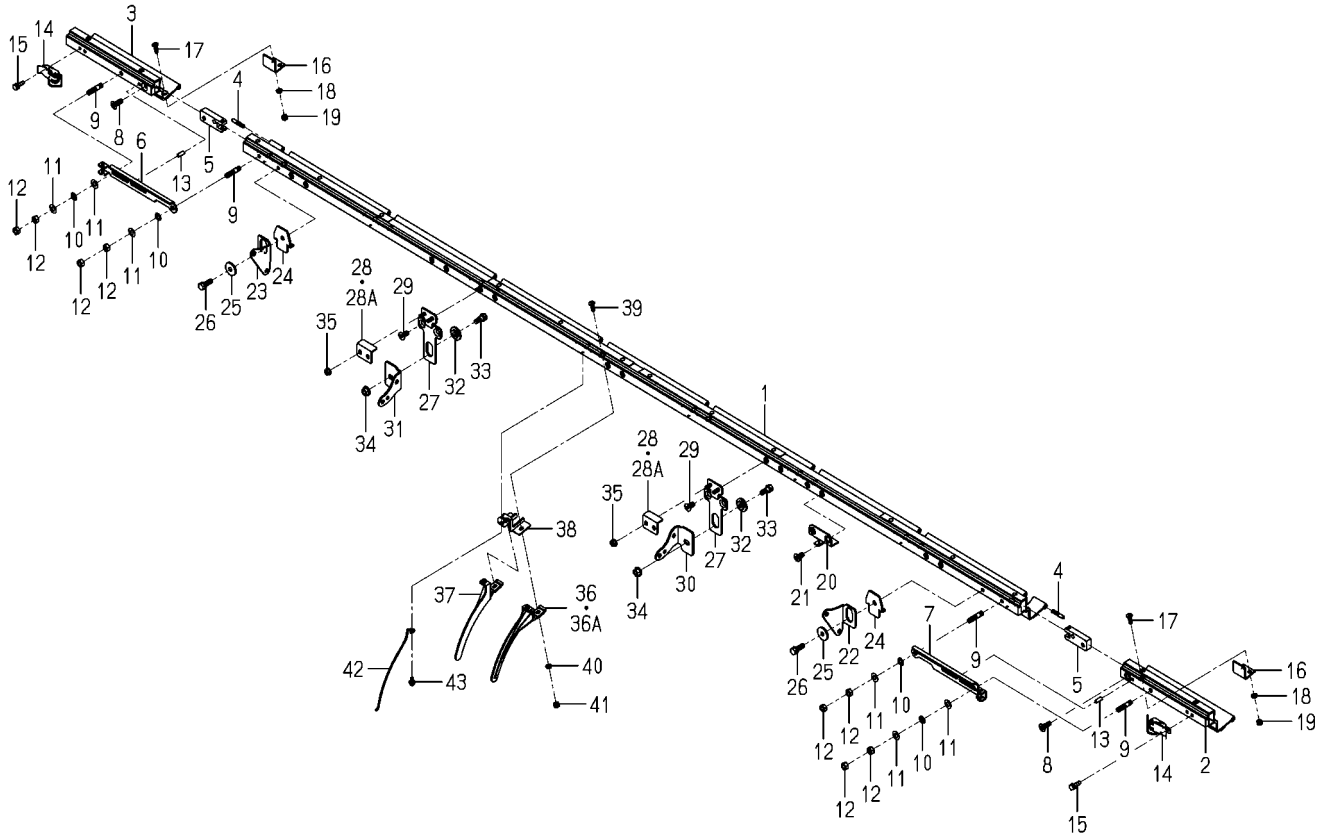

2213-803K-0100

KEY	PART CODE	DESCRIPTION	SPC	TYPE OF MODEL PZ80E16		ITC	COL	GRP	REMARKS
1	2213-803-240-00	RAIL NAE TANK/CENTER	*	1 101650-					
2	2213-803-210-10	FRONT PLATE/SIDE/LH	*	1 101650-					
3	2213-803-230-10	FRONT PLATE/SIDE/RH	*	1 101650-					
4	2162-833-001-00	PLATE	*	2 101650-					
5	2161-833-004-00	JOINT,F,SUB/PLATE	*	2 101650-					
6	2213-803-006-10	PLATE/RAIL/8RH	*	1 101650-					
7	2213-803-007-10	PLATE/RAIL/8LH	*	1 101650-					
8	V112-168-002-00	SCREW/M8X20	*	2 101650-					
9	V251-260-802-50	STUD/M 8X25	*	4 101650-					
10	3533-306-001-00	SPAC/M8	*	4 101650-					
11	V411-260-008-00	WASHER,PL/M 8	*	6 101650-					
12	V304-460-008-00	NUT/M8	*	8 101650-					
13	V522-100-601-60	PIN	*	2 101650-					
14	2157-508-230-00	CLAMP	*	2 101650-					
15	V210-260-602-00	BOLT/S	*	4 101650-					
16	2162-833-051-00	PLATE,CONNECTING	*	2 101650-					
17	V112-706-002-00	SCREW/FLAT	*	4 101650-					
18	V401-700-006-00	WASHER/LOCK	*	4 101650-					
19	V301-700-006-00	NUT	*	4 101650-					
20	2204-803-200-00	STAY/FRONT PLATE/OUT	*	5 101650-					
21	V112-168-001-60	SCREW/M8X16	*	10 101650-					
22	2204-803-034-00	PLATE	*	1 101650-					
23	2204-803-035-00	PLATE	*	1 101650-					
24	2204-803-037-10	PLATE/SLIDER/SUPPORT	*	2 101650-					
25	2139-807-005-00	COLLAR SLIDE METAL	*	2 101650-					
26	V211-260-802-50	BOLT/S	*	2 101650-					
27	2213-803-250-00	PLATE/SLIDER/8 COMP	*	2 101650-					
28	2213-803-009-00	PLATE/STOPPER/TANK/8	*	2 -101691					
28A	2213-803-009-10	PLATE/STOPPER/TANK/8	*	2 101692-		1			
29	2204-803-031-00	BOLT	*	4 101650-					

FIG.149 PLATE(FRONT)SYSTEM(NO.101650-)

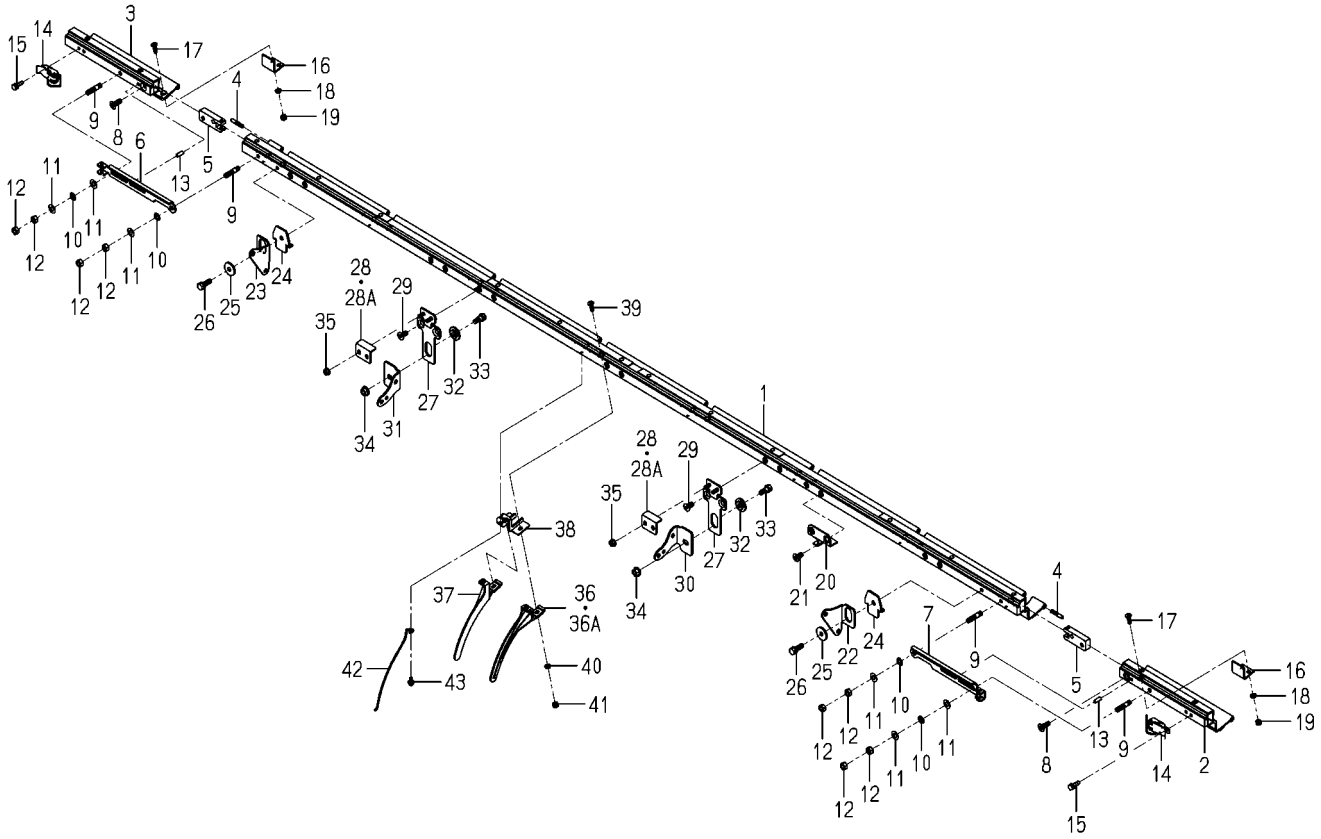

2213-803K-0100

KEY	PART CODE	DESCRIPTION	SPC	TYPE OF MODEL PZ80E16		ITC	COL	GRP	REMARKS
30	2213-803-001-10	STAY(SLIDER/RAIL_NAE	*	1 101650-					
31	2213-803-002-10	STAY(SLIDER/RAIL_NAE	*	1 101650-					
32	2139-807-005-00	COLLAR SLIDE METAL	*	2 101650-					
33	V211-260-802-00	BOLT/S	*	2 101650-					
34	V362-260-008-00	NUT/WASHER	*	2 101650-					
35	V360-260-006-00	NUT/M6	*	4 101650-					
36	2204-803-015-10	GUIDE/SEEDLING/LH/PZ	*	8 -101682					
36A	2204-803-015-20	GUIDE/SEEDLING/LH/PZ	*	8 101683-		1			
37	2204-803-016-20	GUIDE/SEEDLING/RH/PZ	*	8 102350-					
38	2204-803-350-00	PLATE/GUIDE/E16 COMP	*	8 102350-					
39	V112-706-002-00	SCREW/FLAT	*	16 102350-					
40	V401-700-006-00	WASHER/LOCK	*	16 102350-					
41	V301-700-006-00	NUT	*	16 102350-					
42	2204-803-025-00	WIRE,SEEDING GUIDE/P	*	8 102350-					
43	2204-803-024-00	BOLT/M5X12/SP/STAINL	*	8 102350-					

FIG.150 HOLDER(SEEDLING)SYSTEM

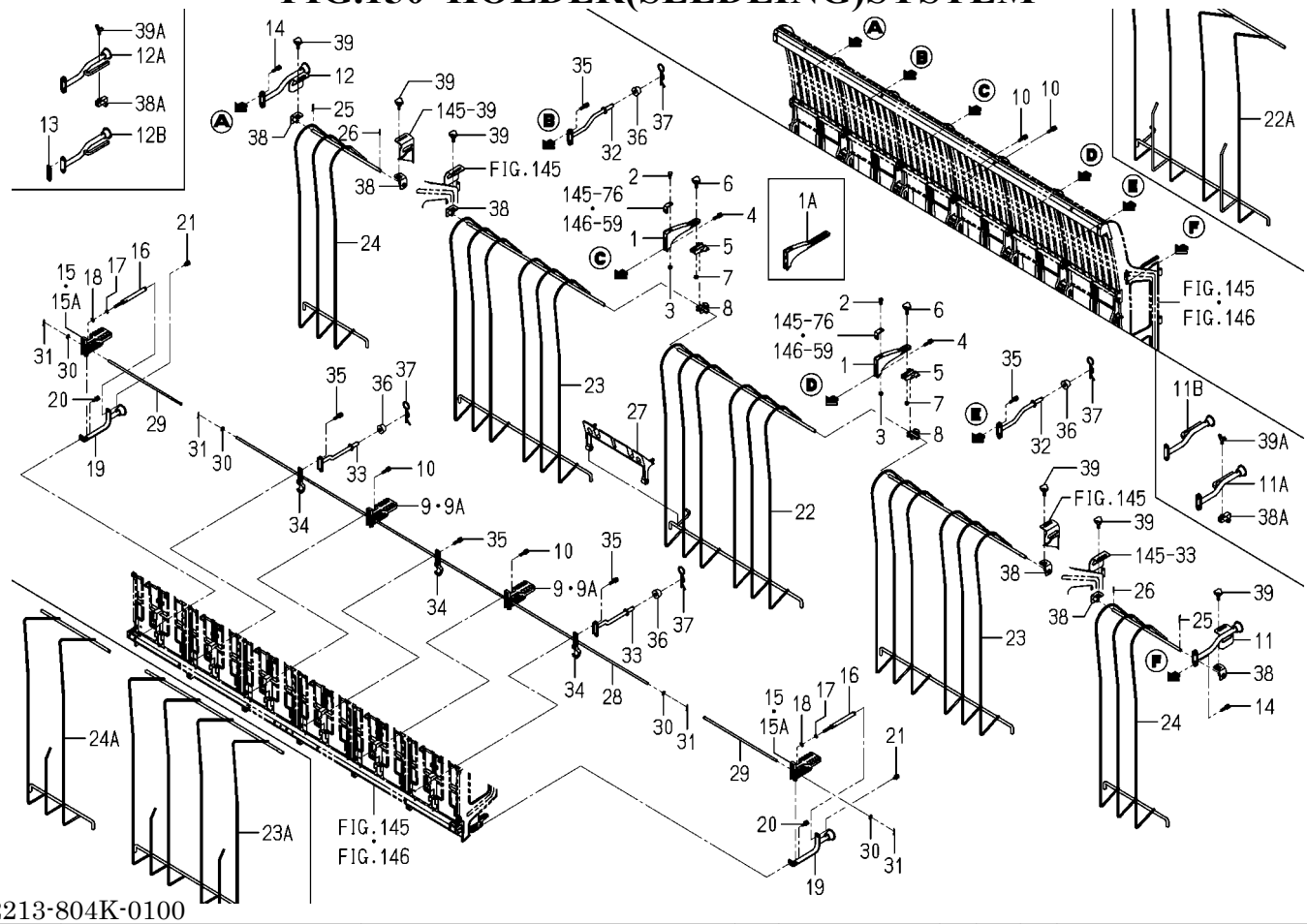

2213-804K-0100

KEY	PART CODE	DESCRIPTION	SPC	TYPE OF MODEL PZ80E16		ITC	COL	GRP	REMARKS
1	2161-834-002-00	HOLDER,SEEDLING UPPE	*	2 -101649					
1A	2204-834-002-00	HOLDER/SEEDLING HOLD	*	2 101650-					
2	V210-260-601-60	BOLT/S	*	2					
3	V301-260-006-00	NUT/M6	*	2					
4	V210-360-603-00	BOLT/SP	*	2					
5	2161-834-003-10	HOLDER,SEEDLING LOCK	*	2					
6	3256-702-004-00	BOLT,KNOB(M6)	*	2					
7	V301-260-006-00	NUT/M6	*	2					
8	2161-834-013-10	STAY,SEEDLING UPPER	*	2					
9	2161-834-001-10	HOLDER,RESISTANT BAR	*	2 -102113					
9A	2161-834-001-30	HOLDER/RESISTANTBAR	*	2 102114-		1			
10	V210-360-603-00	BOLT/SP	*	4					
11	2213-804-200-00	HOLDER/OUTER/LH/PZ	*	1 -101649					
11A	2213-804-300-00	HOLDER/OUTER/LH/8K	*	1 -102349					
11B	2213-804-300-10	HOLDER/OUTER/LH/8K	*	1 102350-		1			
12	2213-804-210-00	HOLDER/OUTER/RH/PZ	*	1 -101649					
12A	2213-804-310-00	HOLDER/OUTER/RH/8K	*	1 -102349					
12B	2213-804-310-10	HOLDER/OUTER/RH/8K	*	1 102350-		1			
13	2213-804-007-00	SPACER/OUTER/RH	*	1 102350-					
14	V210-360-603-00	BOLT/SP	*	4					
15	2161-834-001-10	HOLDER,RESISTANT BAR	*	2 -102113					
15A	2161-834-001-30	HOLDER/RESISTANTBAR	*	2 102114-		1			
16	2162-834-260-00	STAY	*	2					
17	V401-160-006-00	WASHER,SP/M 6	*	2					
18	V411-260-006-00	WASHER / M6	*	2					
19	2162-834-220-00	HOLDER	*	2					
20	V210-360-602-00	BOLT/SP	*	2					
21	V210-360-601-60	BOLT(SP)/M6X16	*	2					
22	2213-804-450-00	SEEDLING HOLDER/PZ/E	*	1 -101649					
22A	2204-804-400-00	FRAME/6/PZ	*	1 101650-					

FIG.150 HOLDER(SEEDLING)SYSTEM

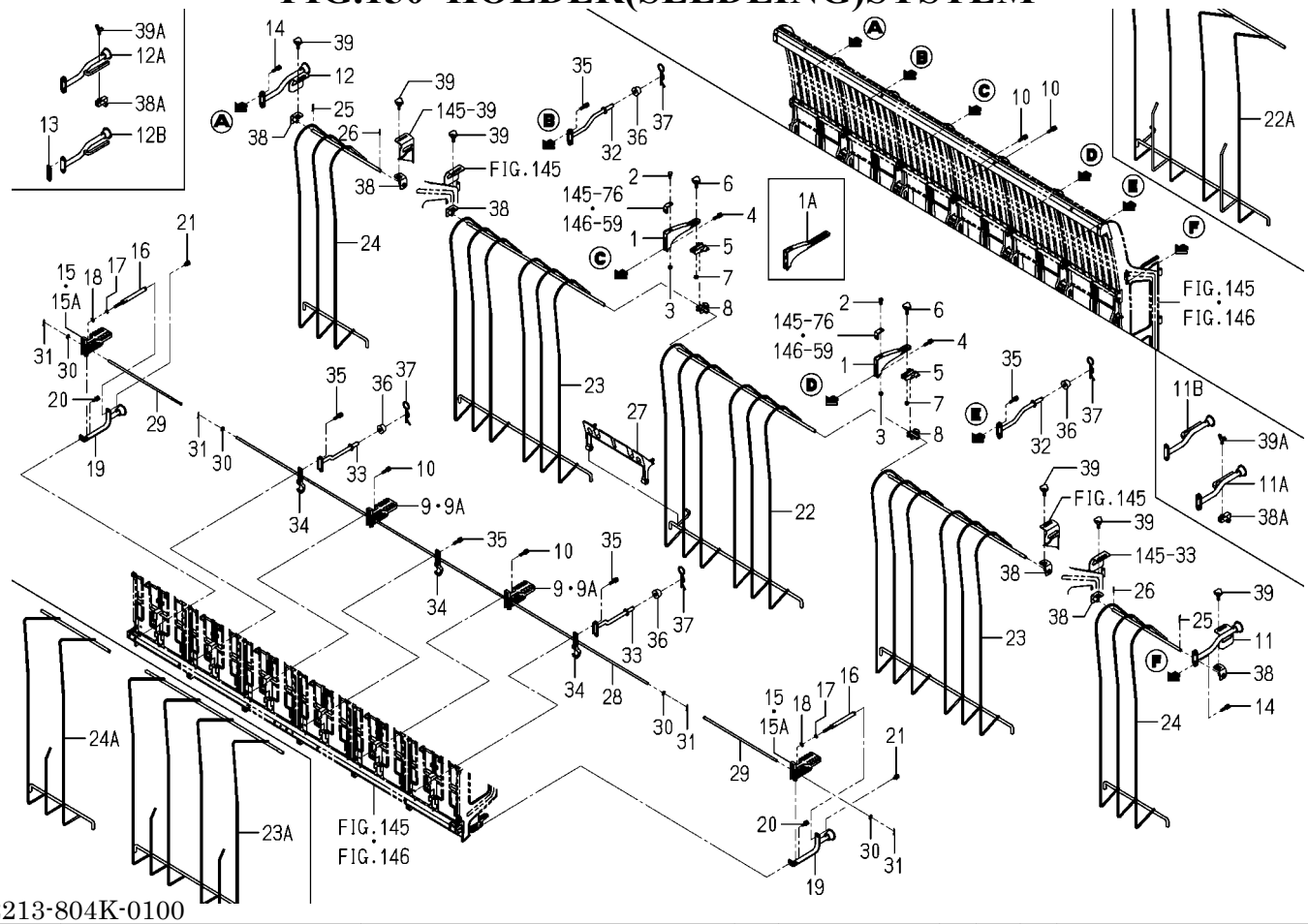

2213-804K-0100

KEY	PART CODE	DESCRIPTION	SPC	TYPE OF MODEL PZ80E16		ITC	COL	GRP	REMARKS
23	2213-804-260-00	SEEDLINGHOLDER/8/E16	*	2 -101649					
23A	2190-804-260-00	PLATE,SEEDING/8	*	2 101650-					
24	2213-804-270-00	SEEDLIGHOLDER/8K/OUT	*	2 -101649					
24A	2190-804-270-00	SEEDLING HOLDER/8/OU	*	2 101650-					
25	3908-170-020-00	PIN/SNAP/08	*	2					
26	V500-162-001-50	PIN,SPLIT/2 X15	*	2					
27	2188-804-004-00	STOPPER,SEED/6/K	*	1					
28	2190-804-001-00	PIN/83E16	*	1					
29	2190-804-002-00	PIN/83E16	*	2					
30	V411-260-006-00	WASHER / M6	*	4					
31	2130-601-018-00	PIN,SNAP/6	*	4					
32	2162-834-250-00	HOLDER/STAY/UPPER	*	2					
33	2162-834-240-10	HOLDER	*	2					
34	2161-834-005-20	HOLDER	*	3					
35	V210-360-603-00	BOLT/SP	*	10					
36	2162-804-005-00	CUSHION	*	4					
37	1416-509-007-00	PIN,HAIR/19	*	4					
38	2213-804-220-00	HOLDER/NAEOSAE COMP	*	6 -101649					
38A	2213-804-320-00	HOLDER/NAEOSAE/ COMP	*	6 101650-					
39	3256-702-004-00	BOLT,KNOB(M6)	*	6 -101649					
39A	V271-160-601-50	BOLT/WING	*	6 101650-					

FIG.151 FEED(SEEDLING)SYSTEM(1/3)

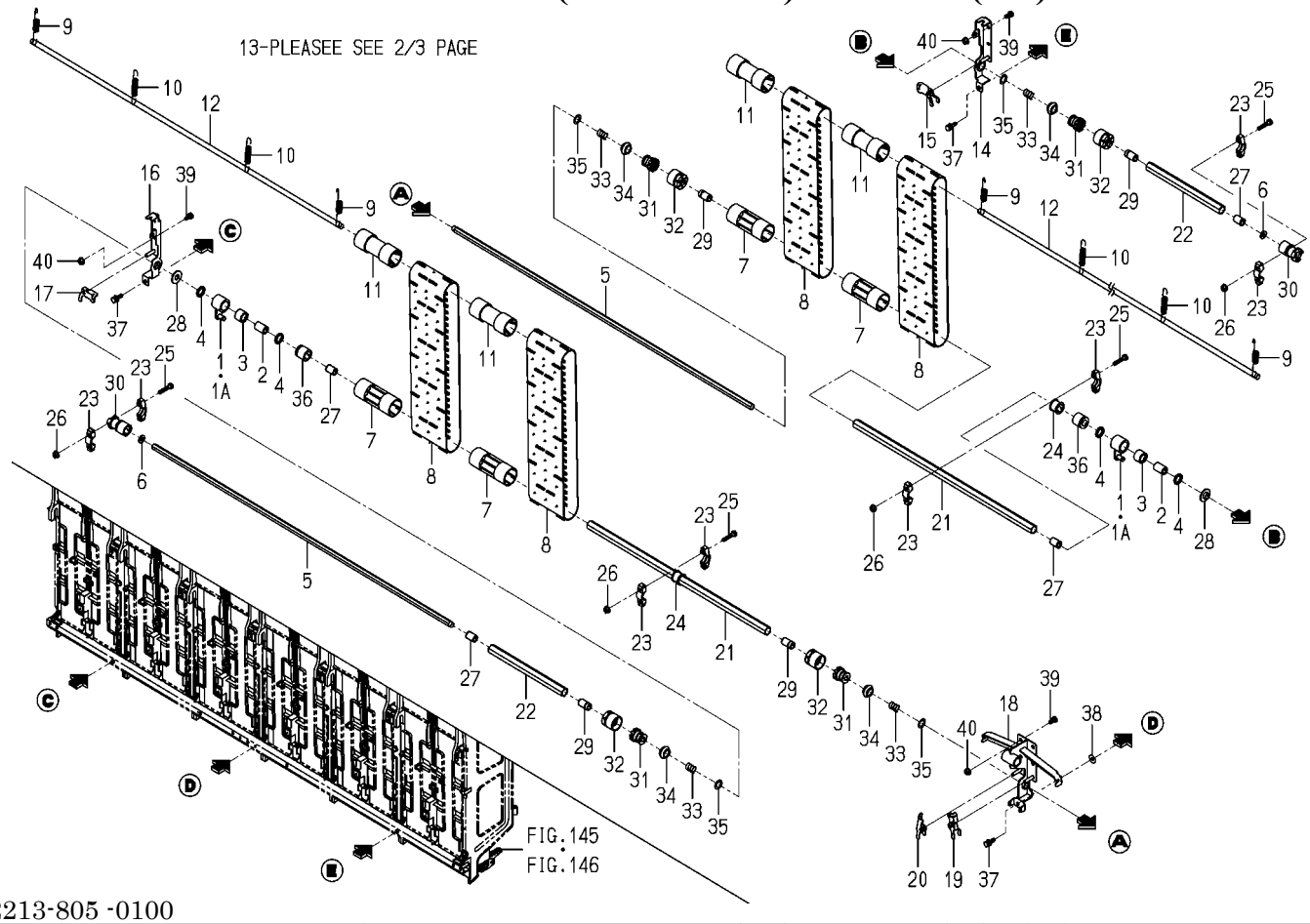

2213-805 -0100

KEY	PART CODE	DESCRIPTION	SPC	TYPE OF MODEL PZ80E16		ITC	COL	GRP	REMARKS
1	2204-805-200-00	HUB/ROLLER CLUTCH/6	*	2 -101091					
1A	2213-805-370-00	HUB/CLUTCH/ROLLER/8	*	2 101092-					
2	2204-805-003-20	SHAFT	*	2					
3	2150-760-302-00	CLUTCH,ROLLER/FC-16	*	2					
4	2204-805-001-00	SEAL,OIL/SD016223	*	4					
5	2213-805-001-00	SHAFT/NAEOKURI/8	*	2					
6	2145-762-006-00	WASHER/7X16X2	*	2					
7	2186-805-004-20	ROLLER/SEEDLING	*	16					
8	2204-805-025-00	BELT/PLANT/PZ	*	16					
9	2161-835-022-00	SPRING,BELT/4	*	8					
10	2161-835-021-00	SPRING,BELT/8	*	4					
11	2161-835-019-00	ROLLER,SEEDLING,UPPE	*	16					
12	2204-805-008-00	SHAFT	*	2					
13	2204-805-064-00	SHAFT	*	2					
14	2204-805-660-00	PLATE/CLUTCH/7	*	1					
15	2204-805-069-00	ARM,CLUTCH	*	1					
16	2204-805-210-00	PLATE/CLUTCH/6	*	1					
17	2204-805-007-00	ARM,CLUTCH	*	1					
18	2213-805-210-00	PLATE/STAY/CLUTCH/C	*	1					
19	2213-805-017-00	ARM/CLUTCH/8LH	*	1					
20	2213-805-018-00	ARM/CLUTCH/8RH	*	1					
21	2190-805-013-00	SHAFT,SEEDLING	*	2					
22	2213-805-014-00	SHAFT/NAEOKURI/212	*	2					
23	2186-805-008-00	HOLDER,SEEDLONG,UPPE	*	8					
24	2186-805-011-00	BUSH,SEEDLING	*	2					
25	V200-260-603-00	BOLT/M 6X30	*	8					
26	V360-260-006-00	NUT/M6	*	8					
27	2186-805-003-00	BUSH,SEEDLING	*	4					
28	2204-805-009-00	BUSH	*	2 100001-					
29	2186-805-034-00	BUSH/SEEDLING/LONG	*	4					

FIG.151 FEED(SEEDLING)SYSTEM(2/3)

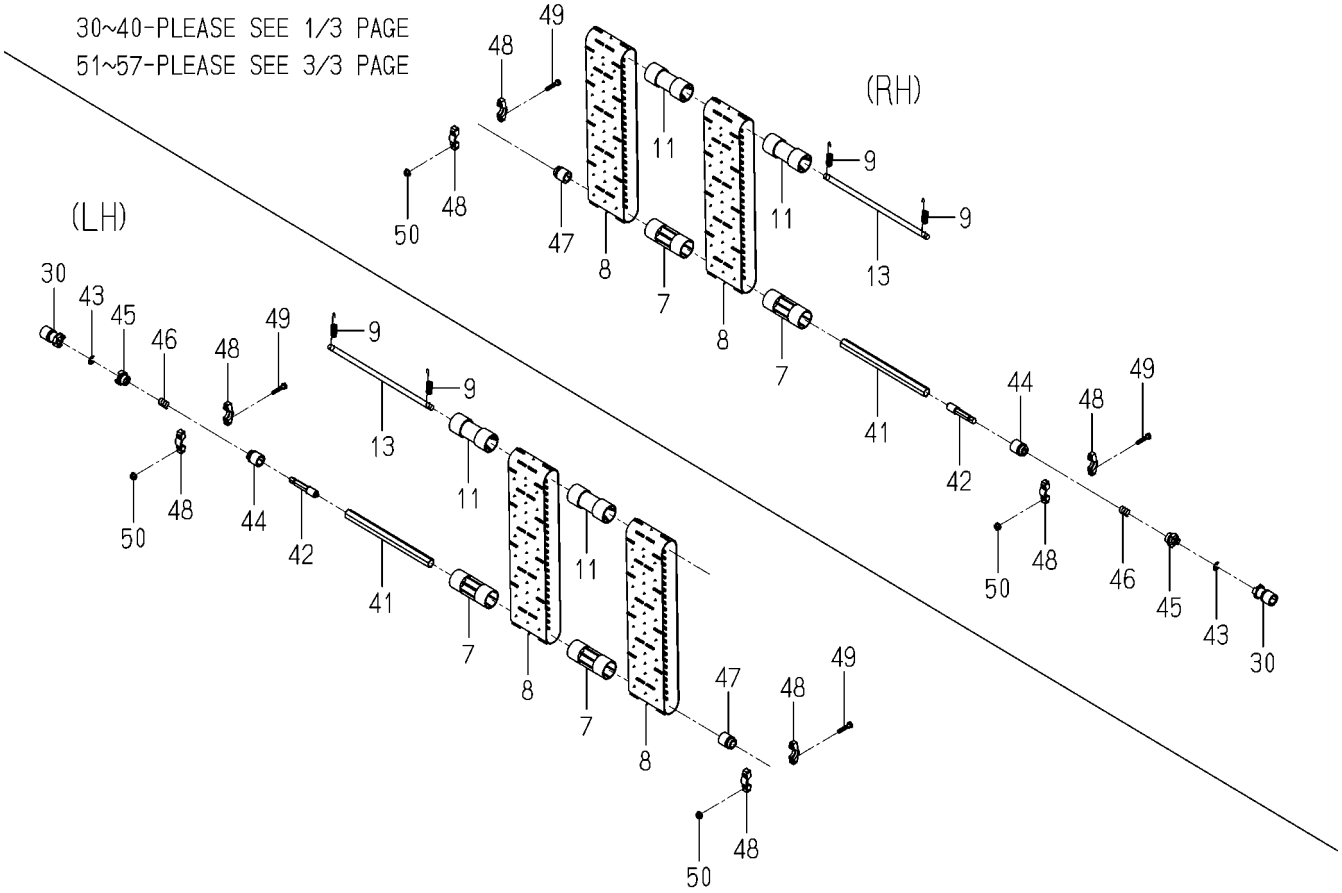

2213-805 -0100

KEY	PART CODE	DESCRIPTION	SPC	TYPE OF MODEL PZ80E16		ITC	COL	GRP	REMARKS
30	2190-805-024-00	CLUTCH	*	2					
31	2186-805-001-10	CLUTCH/SEEDLING/DRIV	*	4					
32	2190-805-021-10	CLUTCH/COUNTER/8	*	4					
33	2190-805-012-00	SPRING,HC030	*	4					
34	2190-805-025-00	BOOT	*	4					
35	8836-703-055-00	WASHER/M12X20X01	*	4					
36	2204-805-005-10	BUSH/SEEDLING FEED/C	*	2 100001-		1			
37	V210-360-602-00	BOLT/SP	*	3					
38	3560-503-302-00	WASHER,WIRE TENSION	*	1 102166-					
39	V200-260-601-20	BOLT/M 6X12	*	8					
40	V360-260-006-00	NUT/M6	*	8					
41	2186-805-052-00	SHAFT,SEEDLING	*	2					
42	2190-805-330-00	PIN,CLUTCH	*	2					
43	V710-140-006-00	RING,SNAP/ 6 E	*	2					
44	2190-805-017-00	BUSH,SEEDLING,FEED	*	2					
45	2190-805-023-00	CLUTCH	*	2					
46	2190-805-012-00	SPRING,HC030	*	2					
47	2186-805-005-00	BUSH,SEEDING OUT	*	2					
48	2186-805-008-00	HOLDER,SEEDLONG,UPPE	*	8					
49	V200-260-603-00	BOLT/M 6X30	*	8					
50	V360-260-006-00	NUT/M6	*	8					
51	2213-805-280-20	SHAFT/COUNTER/8/LH	*	1 -101091					
51A	2213-805-280-30	SHAFT/COUNTER/8/LH	*	1 101092-		3			
52	2213-805-290-20	SHAFT/COUNTER/8/RH	*	1 -101091					
52A	2213-805-290-30	SHAFT/COUNTER/8/RH	*	1 101092-		3			
53	2186-805-041-10	ADJUSTER	*	2					
54	V302-260-006-00	NUT/M 6	*	2					
55	2172-835-023-00	CUSHION,SEEDING ARM	*	2					
56	2213-805-240-00	HOLDER/COUNTER/LH	*	1					
57	2204-805-240-00	HOLDER/COUNTER/RH	*	1					

FIG.151 FEED(SEEDLING)SYSTEM(3/3)

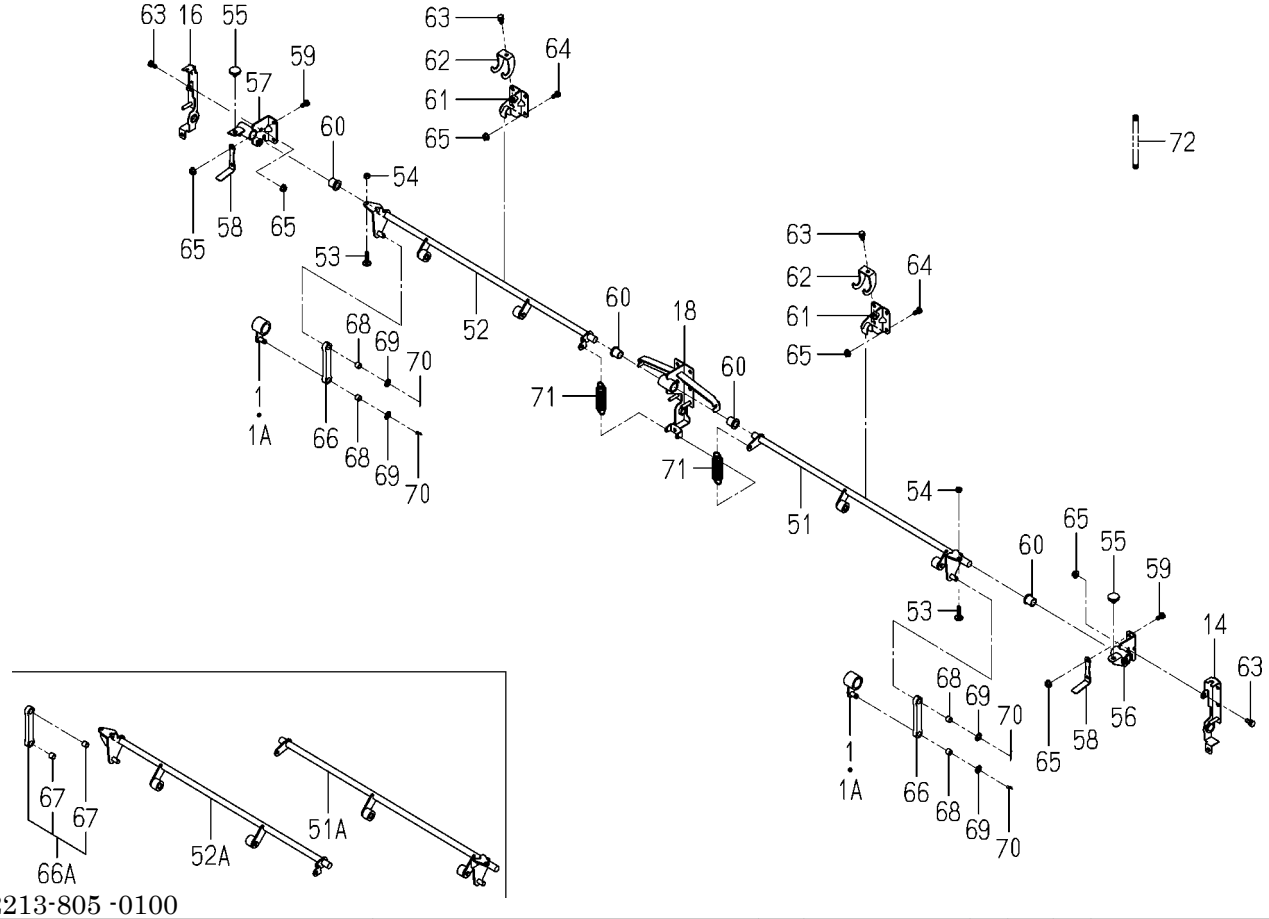

2213-805 -0100

KEY	PART CODE	DESCRIPTION	SPC	TYPE OF MODEL PZ80E16		ITC	COL	GRP	REMARKS
58	2213-805-019-10	PLATE/STOPPER	*	2					
59	V200-260-601-60	BOLT/M 6X16	*	4					
60	2161-835-028-00	BUSH/12X20X17	*	4					
61	2204-805-510-10	PLATE/COUNTER/7 COMP	*	2					
62	2204-805-018-00	HOLDER/COUNTER/CENTR	*	2					
63	V210-260-601-60	BOLT/S	*	4					
64	V200-260-601-20	BOLT/M 6X12	*	8					
65	V360-260-006-00	NUT/M6	*	14					
66	2204-805-016-00	ARM,CONNECTION	*	2 -101091					
66A	2213-805-350-00	ARM/SEEDLING FEED/CO	*	2 101092-					
67	2186-805-020-00	BUSH	*	4 101092-					
68	2186-805-020-00	BUSH	*	4 -101091					
69	2134-805-002-00	WASHER	*	4					
70	V500-163-001-50	PIN,SPLIT/3 X15	*	4					
71	2204-805-020-00	SPRING/HE071	*	2					
72	2151-810-004-10	CORRUGATED TUBE/07X1	*	2 100001-		3			

FIG.152 EXTENSION(TANK/SEEDLING)SYSTEM

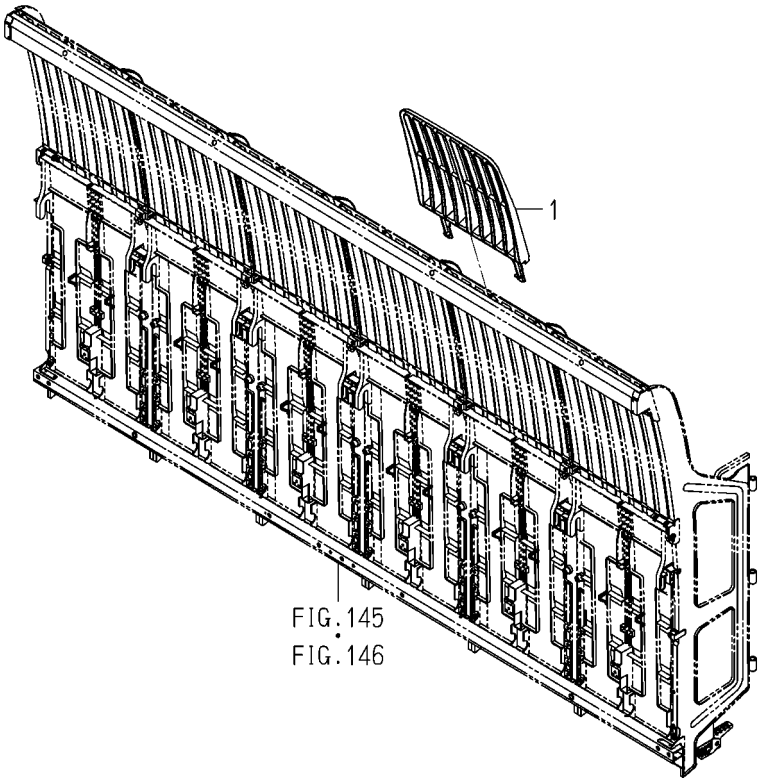

2190-806 -0100

KEY	PART CODE	DESCRIPTION	SPC	TYPE OF MODEL PZ80E16		ITC	COL	GRP	REMARKS
1	2186-806-001-10	TANK,SEEDING/EXTEND/	*	8					

FIG.153 LABEL(CAUTION)(G TYPE)

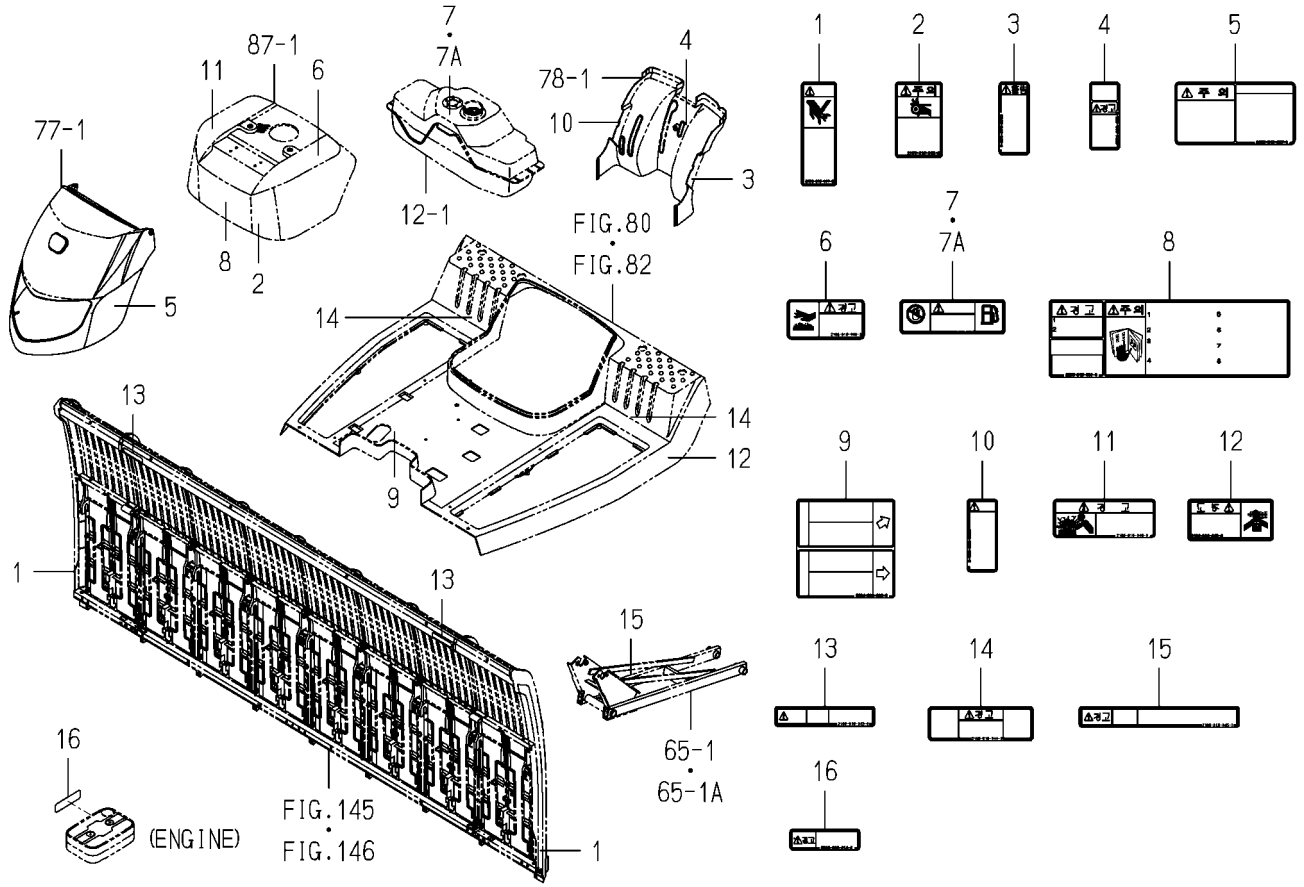

2213-901H-0100

KEY	PART CODE	DESCRIPTION	SPC	TYPE OF MODEL PZ80E16		ITC	COL	GRP	REMARKS
1	2186-916-001-20	LABEL/CAUTION/CHECK/	*	2 100001-					
2	2186-916-002-20	LABEL/CAUTION/BELT/	*	1					
3	2213-916-002-00	LABEL/WARNING/PEDAL/	*	1					
4	2204-916-020-00	LABEL/WARNING/TILT L	*	1					
5	2186-916-007-10	LABEL/CAUTION/BATTER	*	1					
6	2186-916-009-20	LABEL/WARNING/MUFFLE	*	1					
7	2186-916-010-20	LABEL/DANGER/NO FIRE	*	1 -101046					
7A	2186-916-010-30	LABEL/CAUTION	*	1 101047-		1			
8	2213-916-001-00	LABEL/CAUTION/DRIVE/	*	1					
9	2204-916-003-00	LABEL/OILING/PZ/K	*	1					
10	2213-916-003-00	LABEL/WARNING/BRAKE/	*	1					
11	2186-916-046-00	LABEL/WARNING/RADIAT	*	1					
12	2186-916-042-00	LABEL/WARNING/GAS/K	*	1					
13	2186-916-043-00	LABEL/CAUTION/MARKER	*	2					
14	2186-916-044-00	LABEL/WARNING	*	2					
15	2186-916-045-00	LABEL/WARNING/SHAFT	*	1					
16	2213-916-014-00	LABEL/WARNING/CAP/K	*	1 101047-					

FIG.154 LABEL(CAUTION)(D TYPE)

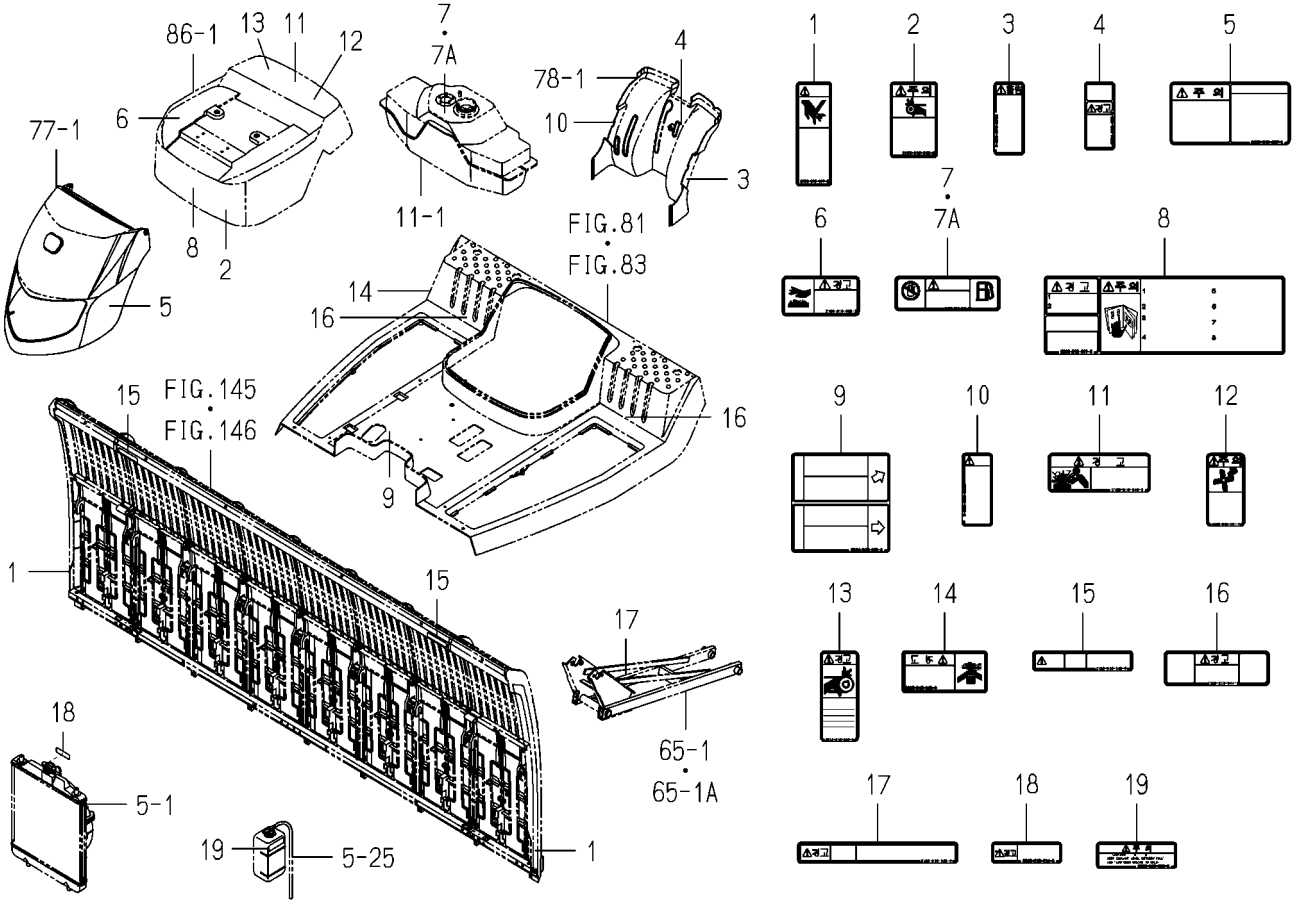

2213-901K-0100

KEY	PART CODE	DESCRIPTION	SPC	TYPE OF MODEL PZ80E16		ITC	COL	GRP	REMARKS
1	2186-916-001-20	LABEL/CAUTION/CHECK/	*	2 100001-					
2	2186-916-002-20	LABEL/CAUTION/BELT/	*	1					
3	2213-916-002-00	LABEL/WARNING/PEDAL/	*	1					
4	2204-916-020-00	LABEL/WARNING/TILT L	*	1					
5	2186-916-007-10	LABEL/CAUTION/BATTER	*	1					
6	2186-916-009-20	LABEL/WARNING/MUFFLE	*	1					
7	2186-916-010-20	LABEL/DANGER/NO FIRE	*	1 -101046					
7A	2186-916-010-30	LABEL/CAUTION	*	1 101047-		1			
8	2213-916-001-00	LABEL/CAUTION/DRIVE/	*	1					
9	2204-916-003-00	LABEL/OILING/PZ/K	*	1					
10	2213-916-003-00	LABEL/WARNING/BRAKE/	*	1					
11	2186-916-046-00	LABEL/WARNING/RADIAT	*	1					
12	3829-905-001-00	LABEL/CAUTION/FAN/K	*	1					
13	2213-916-006-00	LABEL/WARNING/SHIELD	*	1					
14	2186-916-042-00	LABEL/WARNING/GAS/K	*	1					
15	2186-916-043-00	LABEL/CAUTION/MARKER	*	2					
16	2186-916-044-00	LABEL/WARNING	*	2					
17	2186-916-045-00	LABEL/WARNING/SHAFT	*	1					
18	2213-916-014-00	LABEL/WARNING/CAP/K	*	1 101047-					
19	2213-916-015-00	LABEL/CAUTION/RESERV	*	1 101047-					

FIG.155 ORNAMENT&LABEL(G TYPE)

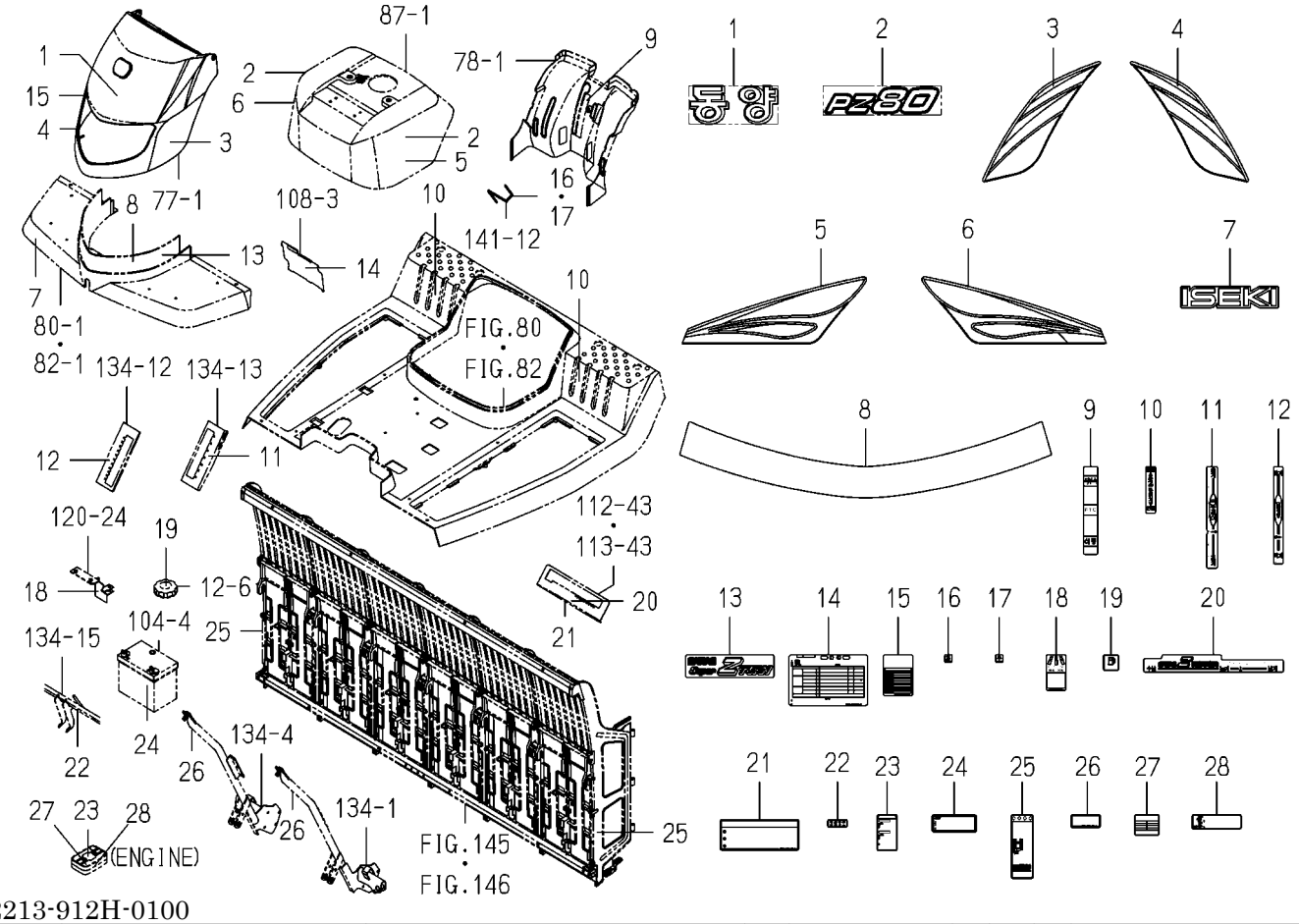

2213-912H-0100

KEY	PART CODE	DESCRIPTION	SPC	TYPE OF MODEL PZ80E16		ITC	COL	GRP	REMARKS
1	2186-916-038-10	ORNAMENT/TYM	*	1					
2	2213-912-008-00	ORNAMENT/PZ80	*	2					
3	2204-912-005-00	MOLDING/HOOD	*	1					
4	2204-912-006-00	MOLDING/HOOD	*	1					
5	2204-912-007-00	MOLDING/ENGINE	*	1					
6	2204-912-008-00	MOLDING/ENGINE	*	1					
7	1716-901-016-00	ORNAMENT/ISEKI	*	1					
8	2204-912-010-10	MOLDING/FRONT	*	1					
9	2204-916-007-00	LABEL/CHANGE/K	*	1					
10	2204-916-008-10	LABEL/CLUTCH/K	*	2					
11	2204-916-011-00	LABEL/DEPTH ADJUSTME	*	1					
12	2204-916-010-00	LABEL/SEEDLING ADJYU	*	1					
13	2213-916-025-00	ORNAMENT/SUPER Z TUR	*	1					
14	2213-916-037-10	LABEL/CONTROLLER/8/K	*	1					
15	2204-916-017-00	LABEL/ERRORDISPLAY/K	*	1					
16	2190-916-007-00	LABEL/LEFT/E16	*	1					
17	2190-916-008-00	LABEL/RIGHT/E16	*	1					
18	2213-916-004-00	LABEL/SEND/PZ8/K	*	1					
19	2213-916-008-00	LABEL/GASOLINE/K	*	1					
20	2204-916-012-00	LABEL/ROTOR/K	*	1					
21	2204-916-013-00	LABEL/ADJYUSTMENT/RO	*	1					
22	2186-916-019-10	LABEL/OIL/K	*	1					
23	2186-916-032-20	LABEL/MANUAL/CLEANER	*	1					
24	2186-916-035-10	LABEL/BATTERY/K	*	1					
25	2190-916-004-00	LABEL/SEEDING TANK	*	2					
26	2190-916-009-00	LABEL/HOCK SHED/E	*	2					
27	2190-916-006-20	LABEL/ENGINE/620	*	1					
28	2213-916-060-00	LABEL/OIL LEVEL/FD/E	*	1 100001-					

FIG.156 ORNAMENT&LABEL(D TYPE)

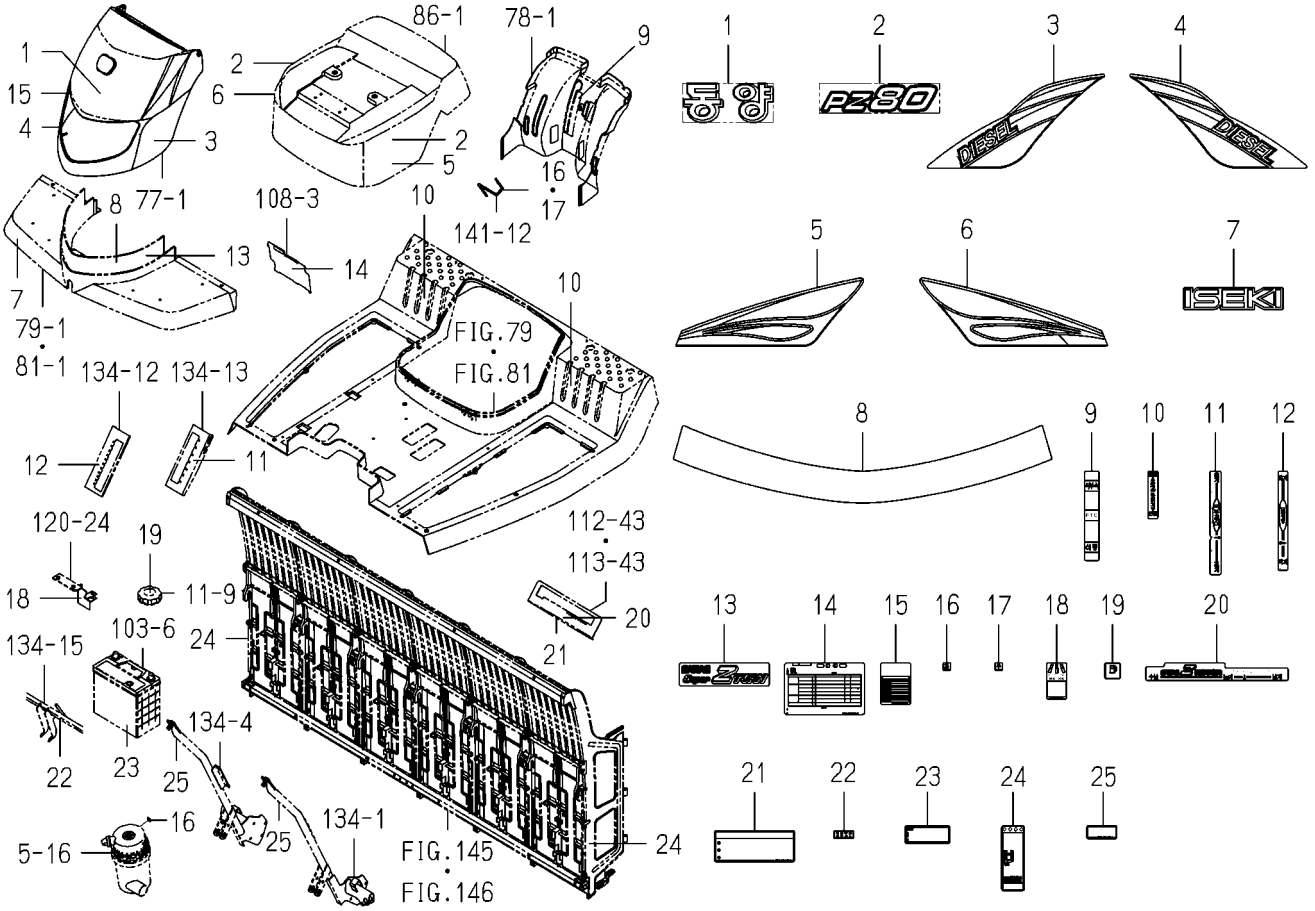

2213-912K-0100

KEY	PART CODE	DESCRIPTION	SPC	TYPE OF MODEL PZ80E16		ITC	COL	GRP	REMARKS
1	2186-916-038-10	ORNAMENT/TYM	*	1					
2	2213-912-002-00	ORNAMENT/PZ80D	*	2					
3	2213-912-042-00	ORNAMENT/DIESEL/LH	*	1					
4	2213-912-043-00	ORNAMENT/DISEL/RH	*	1					
5	2204-912-007-00	MOLDING/ENGINE	*	1					
6	2204-912-008-00	MOLDING/ENGINE	*	1					
7	1716-901-016-00	ORNAMENT/ISEKI	*	1					
8	2204-912-010-10	MOLDING/FRONT	*	1					
9	2204-916-007-00	LABEL/CHANGE/K	*	1					
10	2204-916-008-10	LABEL/CLUTCH/K	*	2					
11	2204-916-011-00	LABEL/DEPTH ADJUSTME	*	1					
12	2204-916-010-00	LABEL/SEEDLING ADJYU	*	1					
13	2213-916-025-00	ORNAMENT/SUPER Z TUR	*	1					
14	2213-916-037-10	LABEL/CONTROLLER/8/K	*	1					
15	2204-916-017-00	LABEL/ERRORDISPLAY/K	*	1					
16	2190-916-007-00	LABEL/LEFT/E16	*	2 100001-					
17	2190-916-008-00	LABEL/RIGHT/E16	*	1					
18	2213-916-004-00	LABEL/SEND/PZ8/K	*	1					
19	2213-916-005-00	LABEL/DIESELFUEL/K	*	1					
20	2204-916-012-00	LABEL/ROTOR/K	*	1					
21	2204-916-013-00	LABEL/ADJYUSTMENT/RO	*	1					
22	2186-916-019-10	LABEL/OIL/K	*	1					
23	2186-916-035-10	LABEL/BATTERY/K	*	1					
24	2190-916-004-00	LABEL/SEEDING TANK	*	2					
25	2190-916-009-00	LABEL/HOCK SHED/E	*	2					

FIG.157 LABEL(PLANTING INTERVAL)

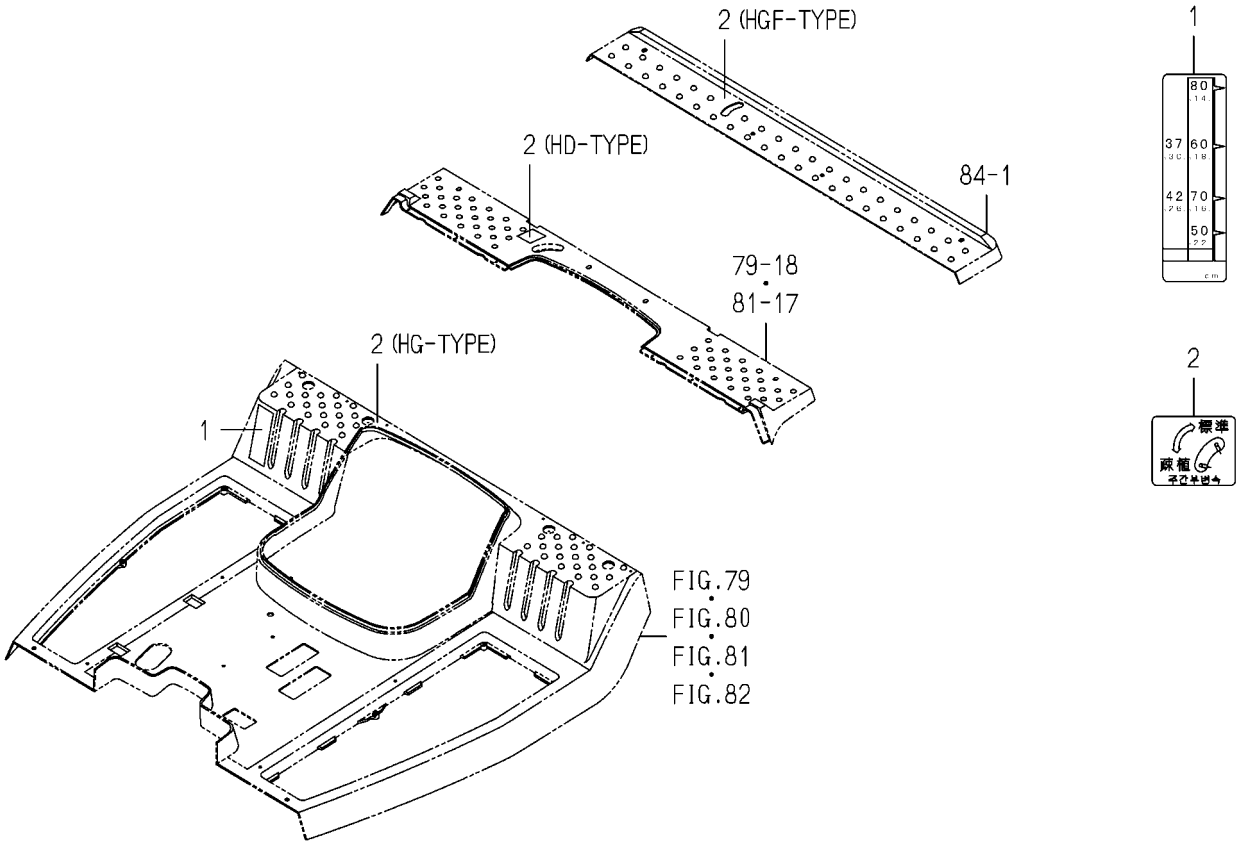

2213-925K-0100

KEY	PART CODE	DESCRIPTION	SPC	TYPE OF MODEL PZ80E16		ITC	COL	GRP	REMARKS
1	2213-916-011-00	LABEL/PLANT/INTERVAL	*	1					
2	2213-916-012-00	LEBEL/DISTANCE/SUB/8	*	1					

FIG.158 ACCESSORY (FORK,WRENCH&GREASE)(G TYPE)

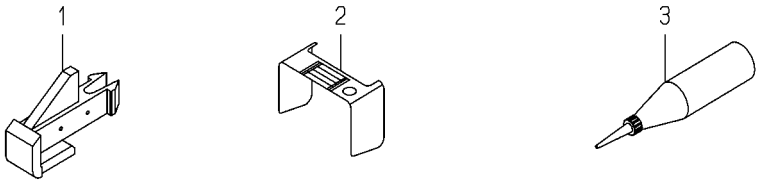

2213-971H-0100

KEY	PART CODE	DESCRIPTION	SPC	TYPE OF MODEL PZ80E16		ITC	COL	GRP	REMARKS
1	2204-738-080-10	PIECE/FORK/PK	*	16					
2	2162-940-001-00	WRENCH,PLUG	*	1					
3	8849-001-200-00	GREASE,PLANTING/300G	*	1					

FIG.159 ACCESSORY(FORK&GREASE)(D TYPE)

2213-971K-0100

KEY	PART CODE	DESCRIPTION	SPC	TYPE OF MODEL		ITC	COL	GRP	REMARKS
				PZ80E16					
1	2204-738-080-10	PIECE/FORK/PK	*	16					
2	8849-001-200-00	GREASE,PLANTING/300G	*	1					

FIG.160 DRIVE SYSTEM(F TYPE)(1/2)

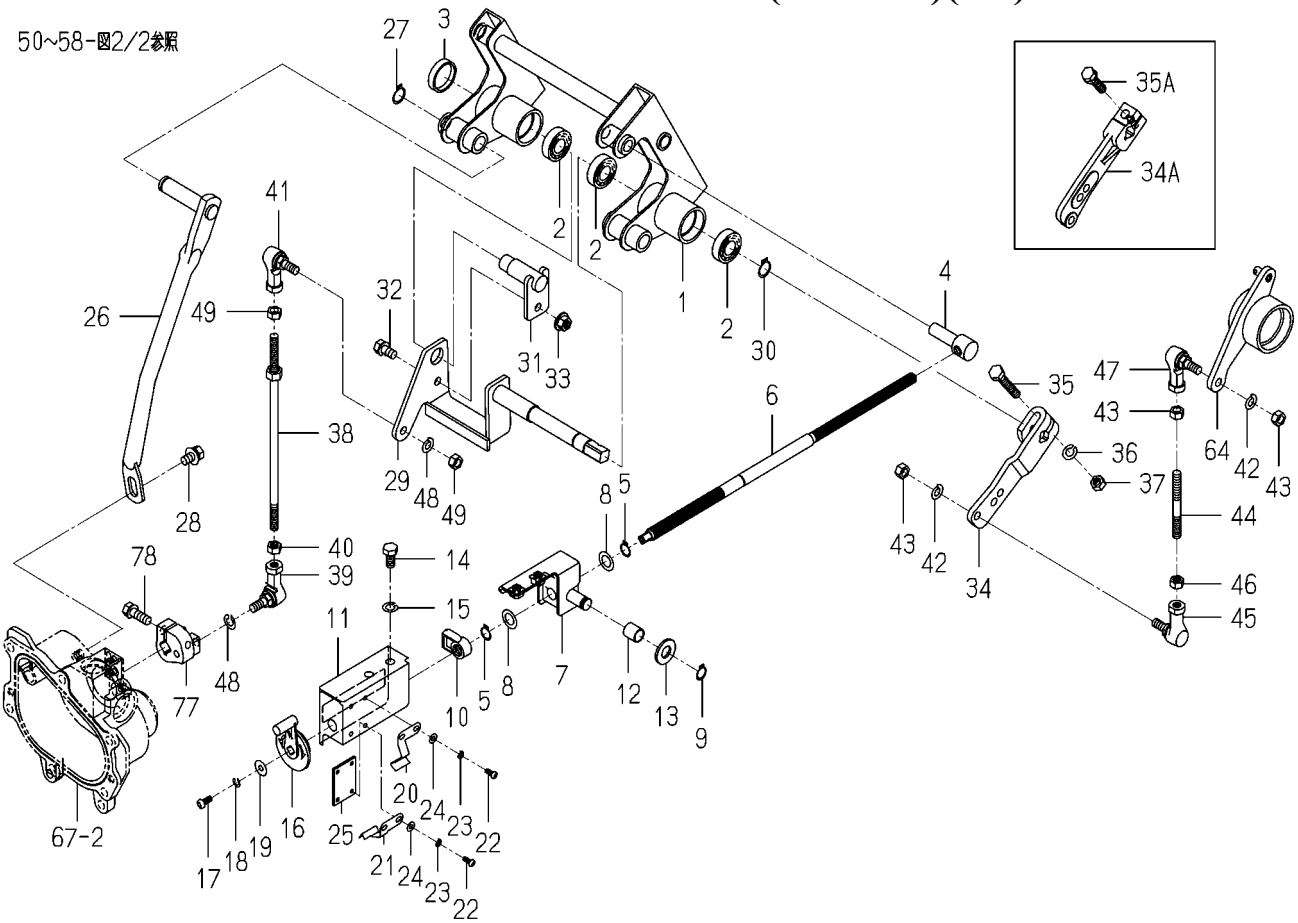

8844-408 -0100

KEY	PART CODE	DESCRIPTION	SPC	TYPE OF MODEL PZ80E16		ITC	COL	GRP	REMARKS
1	8844-408-200-00	PIVOT/DRIVE/8 COMP	*	1					
2	V600-150-600-20	BEARING,RB/6002SS	*	3					
3	2130-206-001-00	CAP 32X7	*	1					
4	8844-408-005-00	PIVOT/DIAL/8	*	1					
5	2145-774-003-00	SNAPRING	*	2					
6	8844-408-011-00	ROD/DIALADJUST/8	*	1					
7	8842-405-320-00	STAY,ADJUST/5	*	1					
8	8836-703-055-00	WASHER/M12X20X01	*	2					
9	2145-774-003-00	SNAPRING	*	1					
10	8842-405-013-00	NUT,ADJUST/F	*	1					
11	8844-408-018-00	GUIDE/ADJUSUT/PZ8	*	1					
12	8842-405-028-00	BUSH/12X14X15	*	1					
13	V411-700-012-00	WASHER	*	1					
14	8842-405-032-00	BOLT/M8X16/SUS	*	2					
15	V401-700-008-00	WASHER/LOCK	*	2					
16	8843-404-007-10	HANDLE/ADJUST	*	1					
17	V111-705-001-00	SCREW	*	1					
18	V401-700-005-00	WASHER/LOCK	*	1					
19	8843-404-009-00	WASHER/05X16X01	*	1					
20	8843-404-006-00	SPRING	*	1					
21	8844-405-024-00	SPRING/STOP	*	1					
22	V111-704-001-00	SCREW	*	4					
23	V401-700-004-00	WASHER/LOCK	*	4					
24	V411-700-004-00	WASHER	*	4					
25	8844-405-027-00	PLATE/I/30X43	*	1					
26	8844-408-400-00	TUBE/STAY/DRIVE/8	*	1					
27	2145-770-014-00	RING, SNAP	*	1					
28	V211-360-801-60	BOLT,SEMS (SP)	*	1					
29	8844-408-220-10	ARM/DRIVE/8 COMP	*	1					
30	2145-770-014-00	RING, SNAP	*	1					

FIG.160 DRIVE SYSTEM(F TYPE)(1/2)

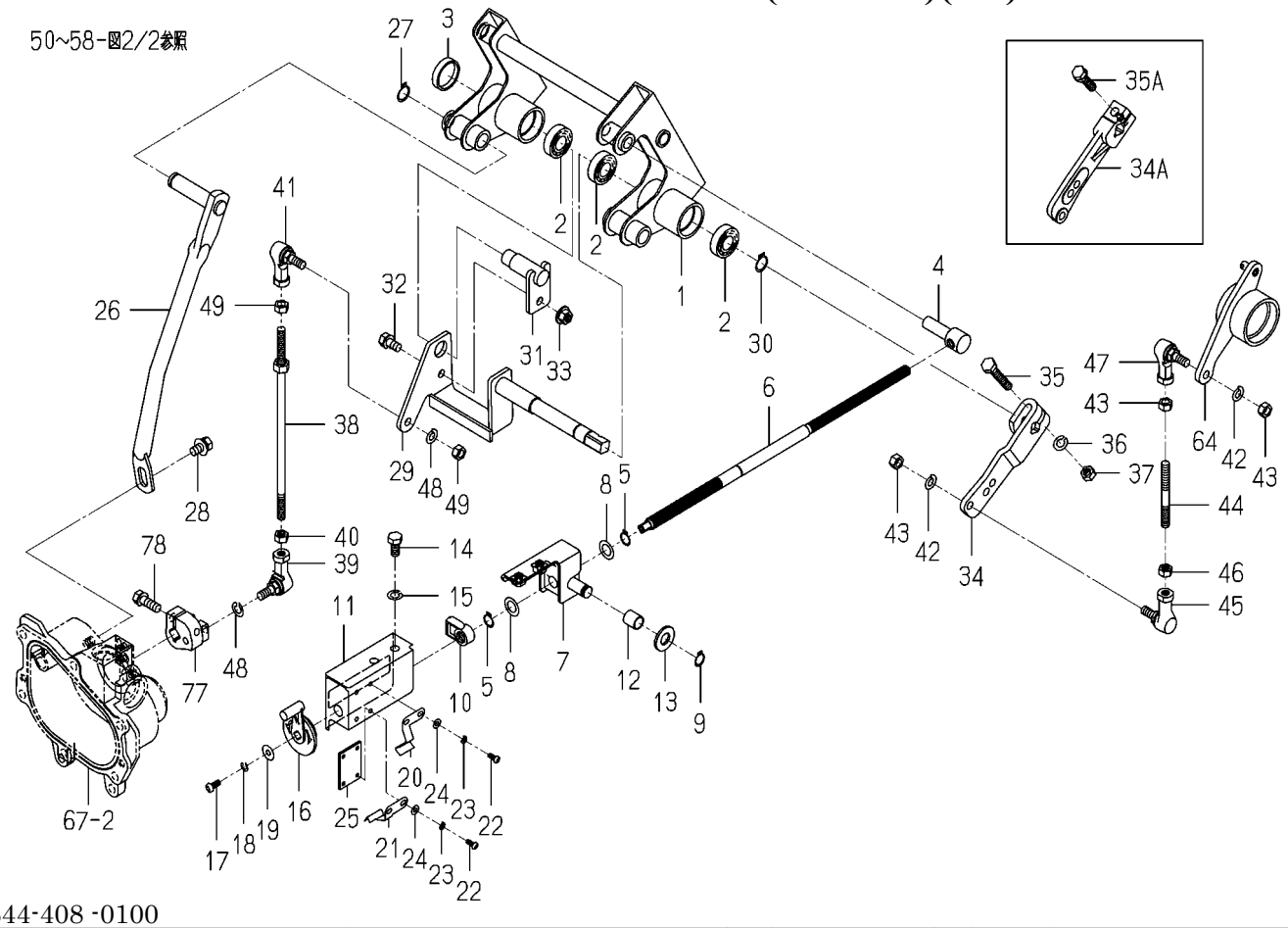

8844-408 -0100

KEY	PART CODE	DESCRIPTION	SPC	TYPE OF MODEL PZ80E16		ITC	COL	GRP	REMARKS
31	8844-408-230-00	PIN/DRIVE/8/RH COMP	*	1					
32	V211-260-801-60	BOLT,SEMS (S) M8X16	*	1					
33	V362-260-008-00	NUT/WASHER	*	1					
34	8844-408-001-30	PLATE/DRIVE/8	*	1 -101649					
34A	8844-408-001-40	PLATE/DRIVE/8	*	1 101650-		1			
35	8844-405-026-00	BOLT/M8X45/SUS	*	1 -101649					
35A	V211-560-803-00	BOLT/M8X30	*	1 101650-					
36	V401-700-008-00	WASHER/LOCK	*	1 -101649					
37	V304-700-008-00	NUT	*	1 -101649					
38	8844-405-310-00	ROD/DRIVE	*	1					
39	1560-695-022-00	JOINT BALL M08LH	*	1					
40	1560-132-007-30	NUT/M8	*	1					
41	1560-695-021-00	JOINT BALL M08RH	*	1					
42	V401-160-008-00	WASHER,SP/M 8	*	2					
43	V304-260-008-00	NUT	*	3					
44	8844-405-014-00	ROD/JOINT	*	1					
45	1560-695-022-00	JOINT BALL M08LH	*	1					
46	1560-132-007-30	NUT/M8	*	1					
47	1560-695-021-00	JOINT BALL M08RH	*	1					
48	V401-160-008-00	WASHER,SP/M 8	*	2					
49	V304-260-008-00	NUT	*	2					
50	8844-405-001-00	BRACKET/LH	*	1					
51	8844-405-002-00	BRACKET/RH	*	1					
52	8844-405-021-00	BOLT/M8X75	*	2					
53	V401-700-008-00	WASHER/LOCK	*	2					
54	V201-700-803-00	BOLT	*	2					
55	V401-700-008-00	WASHER/LOCK	*	2					
56	8844-407-002-00	STAY/7	*	1					
57	8842-405-033-00	BOLT/M8X20/SUS	*	1					
58	V401-700-008-00	WASHER/LOCK	*	1					

FIG.160 DRIVE SYSTEM(F TYPE)(2/2)

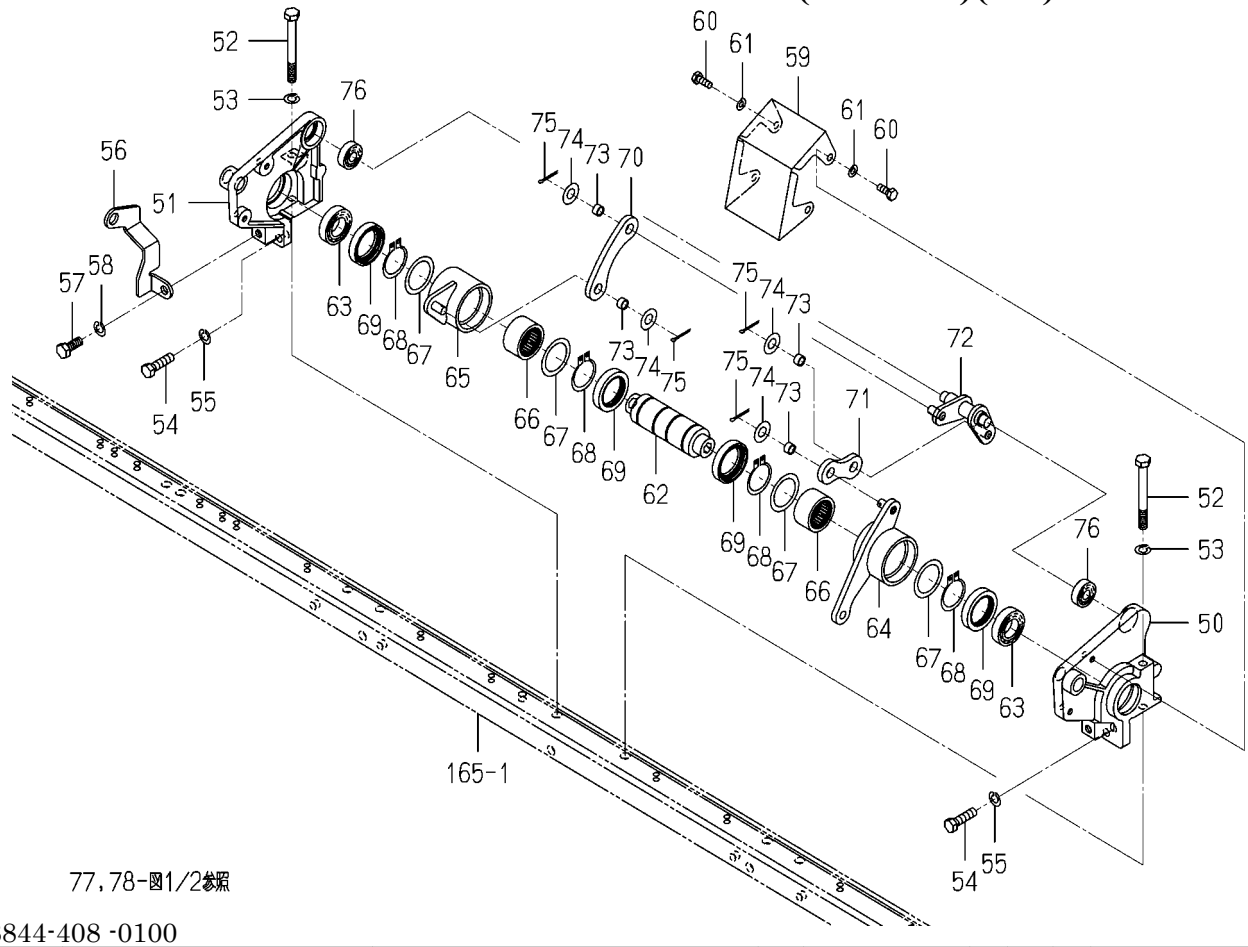

8844-408 -0100

KEY	PART CODE	DESCRIPTION	SPC	TYPE OF MODEL PZ80E16		ITC	COL	GRP	REMARKS
59	8844-405-017-00	COVER	*	1					
60	V200-700-601-60	BOLT	*	4					
61	V401-700-006-00	WASHER/LOCK	*	4					
62	8844-405-003-00	SHAFT/CLUTCH	*	1					
63	8844-405-022-00	BEARING/BALL	*	2					
64	8844-706-200-10	HUB/ROLLER CLUTCH/DR	*	1					
65	8844-706-210-00	HUB/LOCK	*	1					
66	8836-703-431-00	CLUTCH,ROLLER/FC30	*	2					
67	8836-703-013-00	WASHER/30X40X01	*	4					
68	V704-140-030-00	RING,SNAP/30 C	*	4					
69	V744-130-420-80	SEAL,OIL/TC30428	*	4					
70	8844-405-009-10	ARM/COUNTER/L	*	1					
71	8844-405-010-00	ARM/COUNTER/R	*	1					
72	8844-406-260-00	SHAFT/COUNTER	*	1					
73	8842-405-019-00	BUSH,ARM COUNTER	*	4					
74	V411-700-008-00	WASHER	*	4					
75	2188-208-015-00	PIN,COTTER/2.5X20/SU	*	4					
76	V600-150-600-00	BEARING	*	2					
77	8844-408-019-00	ARM/PZ/8	*	1					
78	V211-560-802-50	BOLT,SEMS/M8X25 7T	*	1					

FIG.161 AIR CHAMBER SYSTEM(F TYPE)

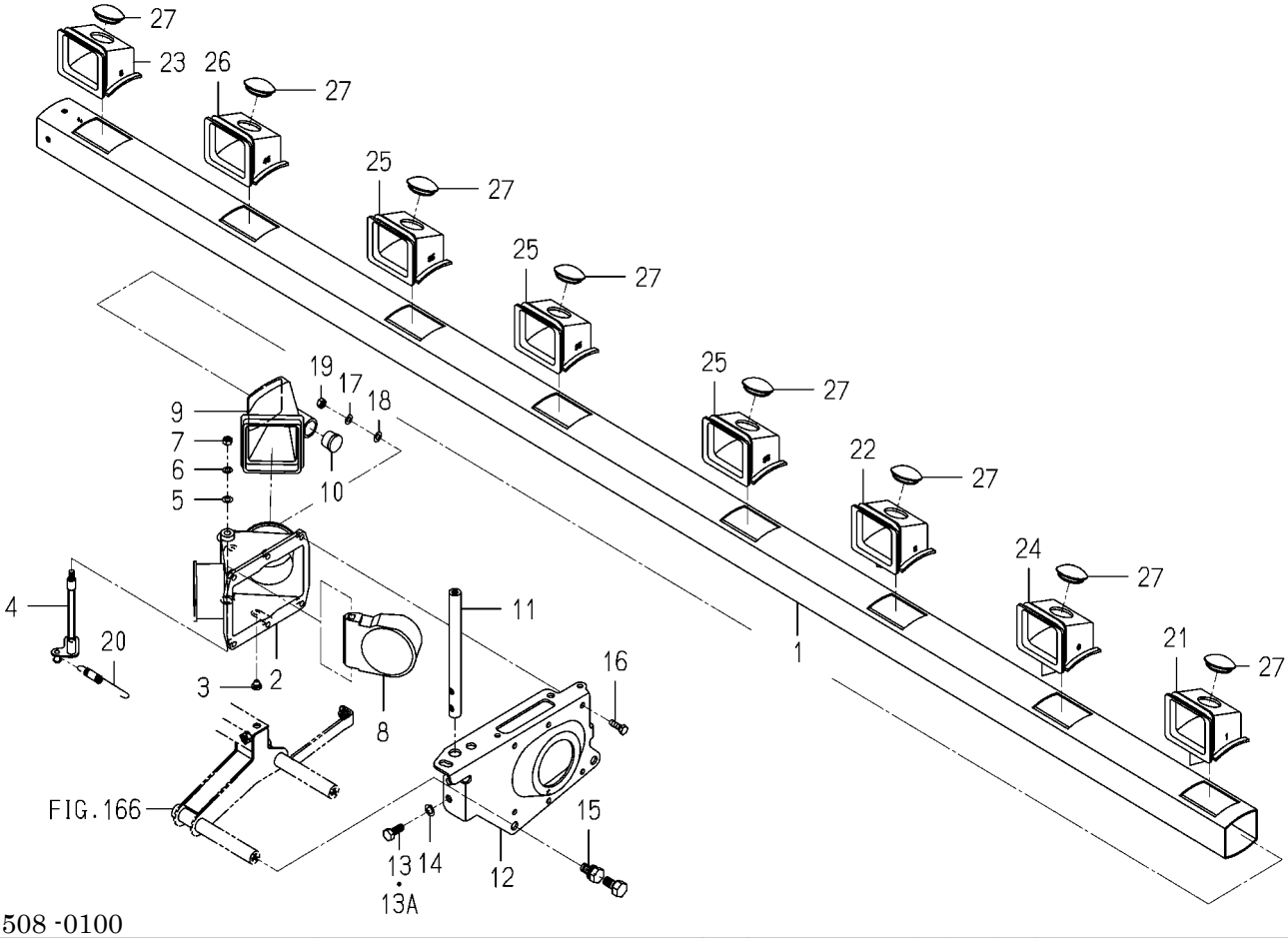

8844-508 -0100

KEY	PART CODE	DESCRIPTION	SPC	TYPE OF MODEL PZ80E16		ITC	COL	GRP	REMARKS
1	8842-508-003-10	TUBE,EXHAUST/FG8	*	1					
2	8842-505-002-00	CASE,SHUTTER	*	1					
3	8842-505-007-00	CAP,SHUTTER	*	1					
4	8842-515-210-00	SHAFT,CHANGE/PG	*	1					
5	V411-700-006-00	WASHER	*	1					
6	V401-700-006-00	WASHER/LOCK	*	1					
7	V301-700-006-00	NUT	*	1					
8	8842-505-001-20	SHUTTER	*	1					
9	8842-505-004-00	JOINT,EXHAUST	*	1					
10	8842-505-006-00	CAP/20	*	1					
11	8844-505-001-00	PIN/BLOWER	*	1					
12	8844-505-002-00	STAY/AIR CHAMBER	*	1					
13	8842-405-033-00	BOLT/M8X20/SUS	*	2 -102290					
13A	8842-505-037-00	BOLT/M8X20	*	2 102291-					
14	V401-700-008-00	WASHER/LOCK	*	2					
15	8842-505-035-00	BOLT/M10X20	*	2 100001-					
16	8842-505-031-00	BOLT/M6X20	*	6 100001-					
17	8842-505-034-00	S.W/M6	*	6 100001-					
18	8842-505-033-00	WASHER/M6	*	6 100001-					
19	8842-505-032-00	NUT/M6	*	6 100001-					
20	8842-505-019-00	SPRING/HE079	*	1					
21	8842-505-021-00	BOOT/EXHAUST/Z1	*	1					
22	8842-505-022-00	BOOT/EXHAUST/Z3	*	1					
23	8842-505-025-00	BOOT/EXHAUST/Z5	*	1					
24	8842-505-026-00	BOOT/EXHAUST/Z6	*	1					
25	8842-505-023-00	BOOT/EXHAUST/Z3	*	3					
26	8842-505-024-00	BOOT/EXHAUST/Z4	*	1					
27	8844-505-015-10	CAP/30	*	8					

FIG.162 DISCHARGE SYSTEM(F TYPE)

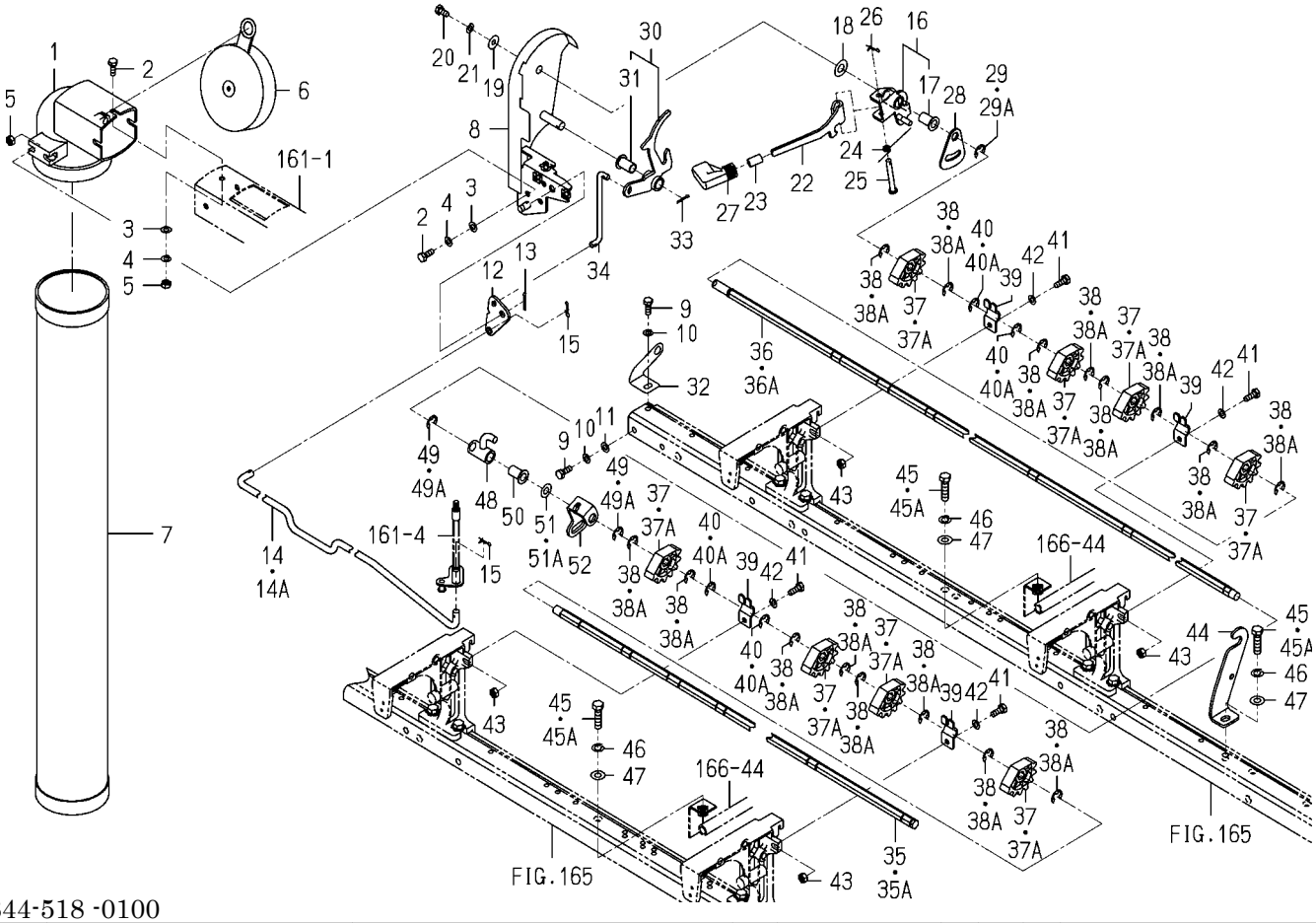

8844-518 -0100

KEY	PART CODE	DESCRIPTION	SPC	TYPE OF MODEL PZ80E16		ITC	COL	GRP	REMARKS
1	8842-515-002-00	DUCT,EXHAUST	*	1					
2	V200-700-601-60	BOLT	*	5					
3	V411-700-006-00	WASHER	*	5					
4	V401-700-006-00	WASHER/LOCK	*	5 100001-					
5	V301-700-006-00	NUT	*	5					
6	8842-515-015-00	CAP,DUCT/EXHAUST	*	1					
7	8842-515-300-00	CHUTE/TAKE OUT	*	1					
8	8842-515-260-30	BASE/DISCHARGE COMP	*	1 100001-		1			
9	V200-700-601-60	BOLT	*	3					
10	V401-700-006-00	WASHER/LOCK	*	3					
11	V411-700-006-00	WASHER	*	1 100001-					
12	8842-515-020-10	COUNTER,BLOWER CHANG	*	1					
13	V500-162-501-50	PIN,SPLIT/2.5X15	*	1 100001-					
14	8844-518-001-00	ROD/BLOWCHANG/8Z	*	1 -102349					
14A	8844-518-001-10	ROD/BLOWCHANG/8Z	*	1 102350-		1			
15	2161-735-006-00	PIN	*	2					
16	8842-515-350-00	SUPPORT,EXHAUST LEVE	*	1					
17	8842-515-351-00	BUSH/10X12X20	*	1					
18	V411-700-010-00	WASHER	*	1					
19	3560-503-302-00	WASHER,WIRE TENSION	*	1					
20	V200-700-601-60	BOLT	*	1					
21	V401-700-006-00	WASHER/LOCK	*	1					
22	8842-515-013-00	LEVER,EXHAUST	*	1					
23	8842-515-018-00	TUBE/08X10X17	*	1					
24	8842-515-021-00	SPRING/HT008	*	1					
25	2149-402-012-00	PIN/06X45	*	1					
26	2161-735-005-00	PIN	*	1					
27	2194-117-001-00	GRIP,AXLE	*	1					
28	8842-515-005-10	PLATE,EXHAUST LEVER	*	1					
29	8842-515-022-00	RING, SNAP	*	1 -101744					

FIG.162 DISCHARGE SYSTEM(F TYPE)

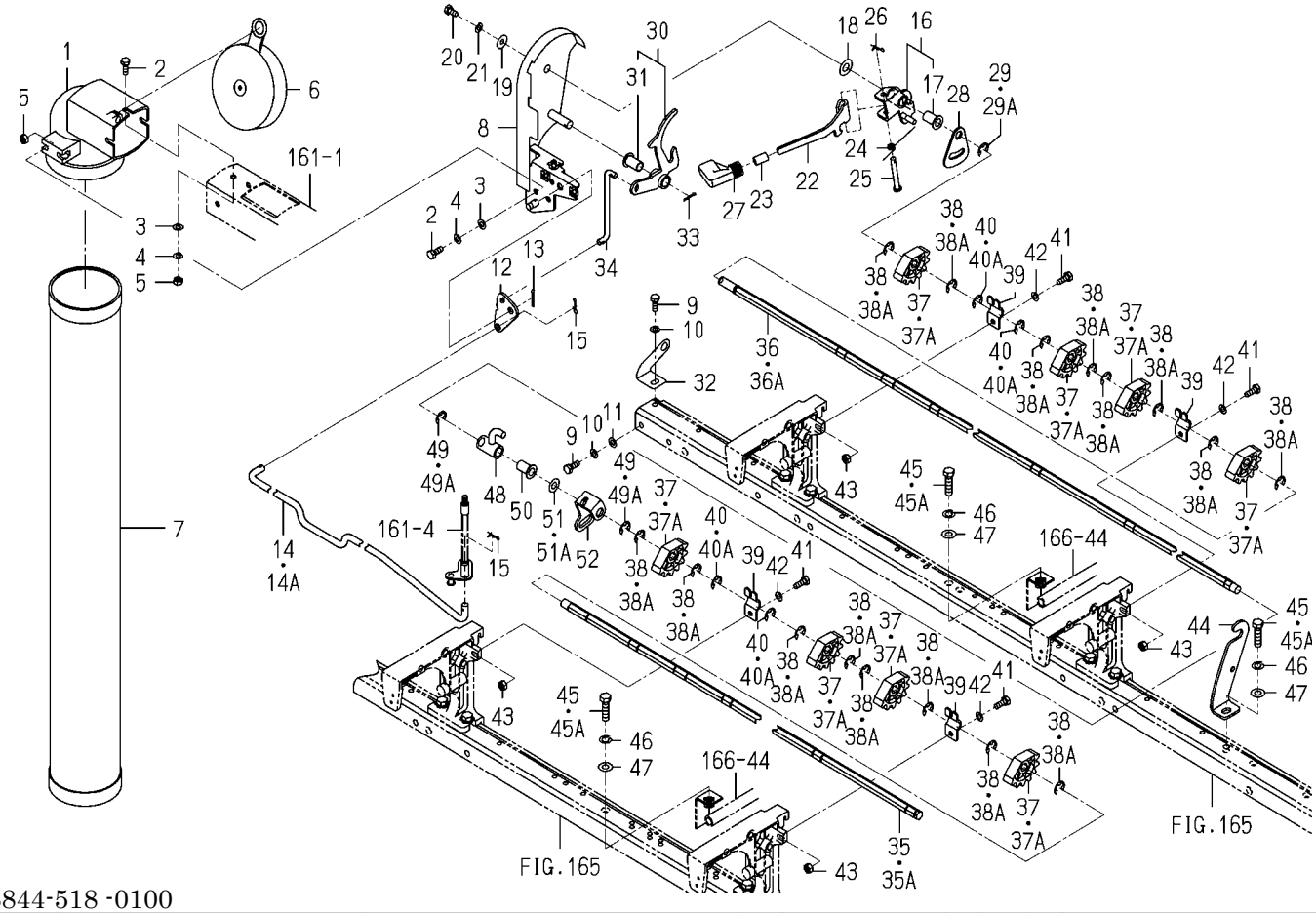

8844-518 -0100

KEY	PART CODE	DESCRIPTION	SPC	TYPE OF MODEL PZ80E16		ITC	COL	GRP	REMARKS
29A	8842-515-025-00	SETRING/E/9	*	1 101745-					
30	8842-515-360-00	ARM,BLOWER	*	1					
31	8842-515-351-00	BUSH/10X12X20	*	1					
32	8842-515-003-00	PLATE,EXHAUST GUIDE	*	1					
33	V500-162-501-50	PIN,SPLIT/2.5X15	*	1 100001-					
34	8842-515-017-00	ROD/EXHAUST LEVER	*	1					
35	8844-518-002-00	SHAFT/EXHAUST/8Z/L	*	1 -101744					
35A	8844-518-002-10	SHAFT/EXHAUST/8Z/L	*	1 101745-		1			
36	8844-518-003-00	SHAFT/EXHAUST/RH	*	1 -101744					
36A	8844-518-003-10	SHAFT/EXHAUST/RH	*	1 101745-		1			
37	8842-515-011-10	GEAR,EXHAUST	*	8 -101744					
37A	8842-515-011-20	GEAR/REMAINDER/DISCH	*	8 101745-		1			
38	8842-515-022-00	RING, SNAP	*	16 -101744					
38A	8842-515-025-00	SETRING/E/9	*	16 101745-					
39	8842-515-006-00	HOLDER,EXHAUST	*	4					
40	8842-515-022-00	RING, SNAP	*	4 -101744					
40A	8842-515-025-00	SETRING/E/9	*	4 101745-					
41	V200-700-601-20	BOLT	*	4					
42	V401-700-006-00	WASHER/LOCK	*	4					
43	V301-700-006-00	NUT	*	4					
44	8842-515-023-00	STAY/SHAFT/EXHAUST	*	1					
45	V201-700-802-00	BOLT	*	3 -102290					
45A	8842-505-037-00	BOLT/M8X20	*	3 102291-					
46	V401-700-008-00	WASHER/LOCK	*	3					
47	V411-700-008-00	WASHER	*	3					
48	8844-518-210-00	COUPLING/EXHAUS COMP	*	1					
49	8842-515-022-00	RING, SNAP	*	2 -101744					
49A	8842-515-025-00	SETRING/E/9	*	2 101745-					
50	8842-515-351-00	BUSH/10X12X20	*	1					
51	V411-700-008-00	WASHER	*	1 -101422					

FIG.162 DISCHARGE SYSTEM(F TYPE)

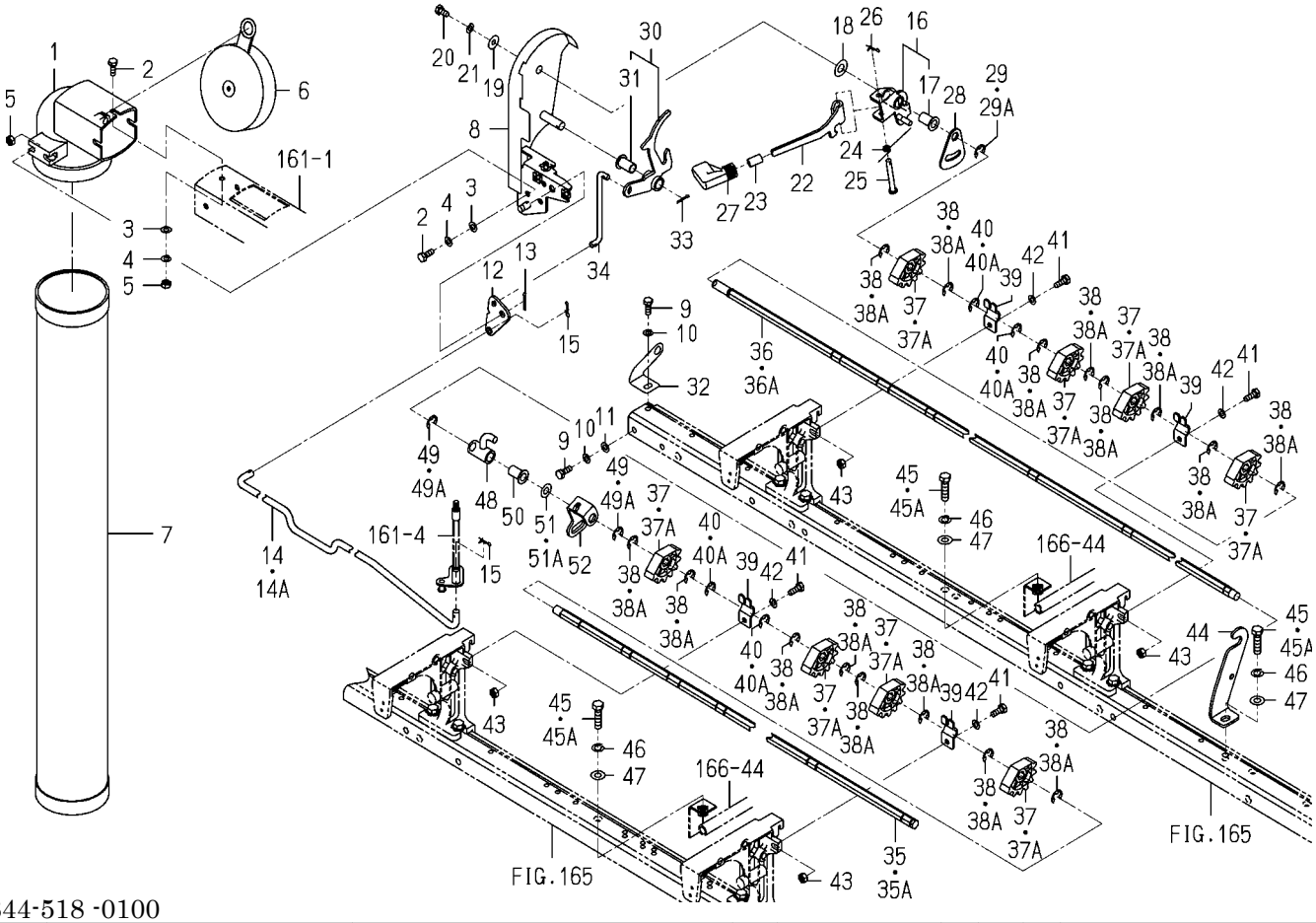

8844-518 -0100

KEY	PART CODE	DESCRIPTION	SPC	TYPE OF MODEL PZ80E16		ITC	COL	GRP	REMARKS
51A	V411-700-012-00	WASHER	*	1 101423-1					
52	8844-518-004-00	ARM/EXHAUST/LH	*						

FIG.163 HARNESS, SENNSOR&CONTROLLER SYSTEM(F TYPE)

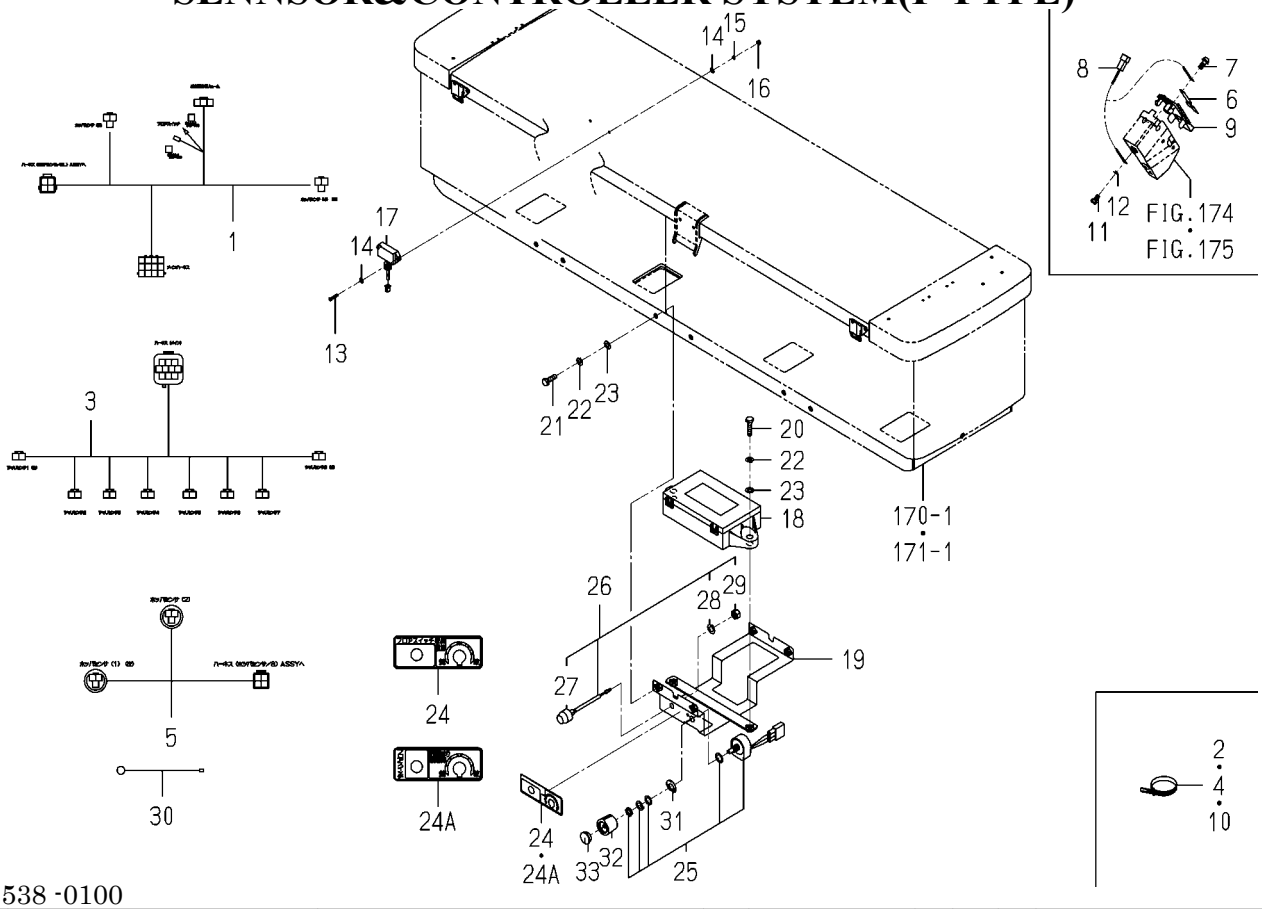

8844-538 -0100

KEY	PART CODE	DESCRIPTION	SPC	TYPE OF MODEL PZ80E16		ITC	COL	GRP	REMARKS
1	8844-538-210-00	HARNESS/HOPPER SENS0	*	1					
2	1376-402-003-00	BAND,WIRE/140	*	5					
3	8844-538-230-00	HARNESS/BLOCK SENS0R	*	1					
4	1376-402-003-00	BAND,WIRE/140	*	8 100001-					
5	8842-538-220-10	HARNESS/HOPPER SENSO	*	1					
6	8836-601-013-00	SENSOR,ANGLE	*	8					
7	8836-601-011-00	SCREW,TAPPING	*	8					
8	8844-535-002-00	HARNESS/SENCER/PZ	*	8					
9	8836-601-012-10	COVER,DITCHER	*	8					
10	1421-621-038-00	BAND,WIRE/170	*	2					
11	V200-700-501-00	BOLT	*	8					
12	V401-700-005-00	WASHER/LOCK	*	8					
13	V111-703-001-60	SCREW	*	8					
14	V411-700-003-00	WASHER	*	16					
15	V401-700-003-00	WASHER/LOCK	*	8					
16	V301-700-003-00	NUT	*	8					
17	8842-535-250-10	SENSOR,HOPPPER	*	4					
18	8841-565-300-10	CONTROLLER,FEEDING	*	1					
19	8844-535-200-10	PLATE/CONTROLER	*	1					
20	V200-700-602-50	BOLT	*	2					
21	V200-700-601-60	BOLT	*	4					
22	V401-700-006-00	WASHER/LOCK	*	6					
23	V411-700-006-00	WASHER	*	6					
24	8844-535-001-00	LABEL/SWITCH	*	1 -102306					
24A	8844-535-001-10	LABEL/SWITCH	*	1 102307-		1			
25	8844-535-300-00	DIAL/SLANT/PZ ASSY	*	1					
26	2145-542-230-00	SWITCH,PUSH	*	1					
27	2145-542-232-10	BOOT	*	1					
28	V401-160-008-00	WASHER,SP/M 8	*	1					
29	V335-260-008-00	NUT	*	1					

FIG.163 HARNESS, SENNSOR&CONTROLLER SYSTEM(F TYPE)

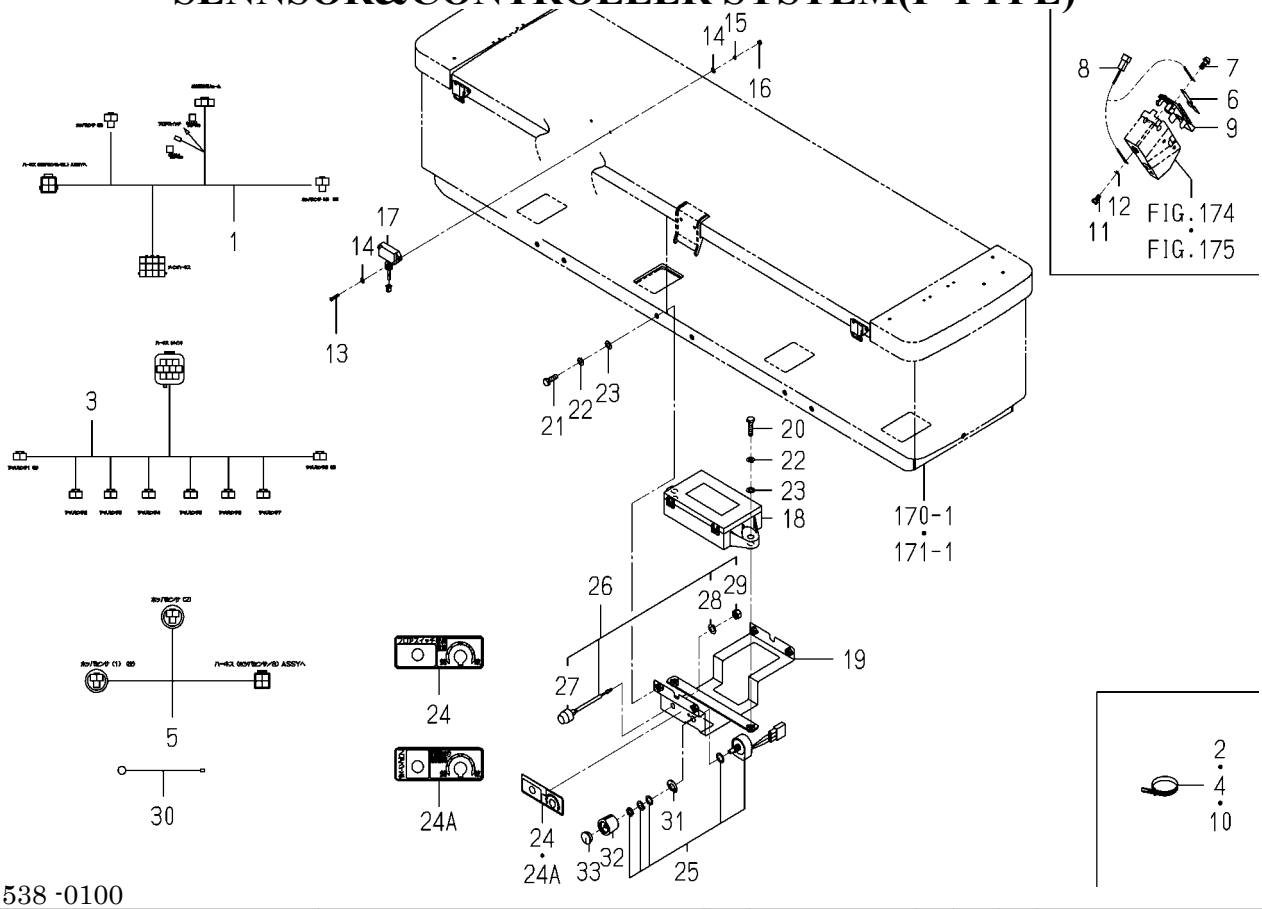

8844-538 -0100

KEY	PART CODE	DESCRIPTION	SPC	TYPE OF MODEL PZ80E16		ITC	COL	GRP	REMARKS
30	8836-502-203-00	HARNESS/SWGND	*	1					
31	3652-273-002-00	SORING	*	1					
32	1729-656-005-00	KNOB	*	1					
33	1719-608-012-10	CAP/OR	*	1					

FIG.164 SENNSOR(SEND OUT)SYSTEM(F TYPE)

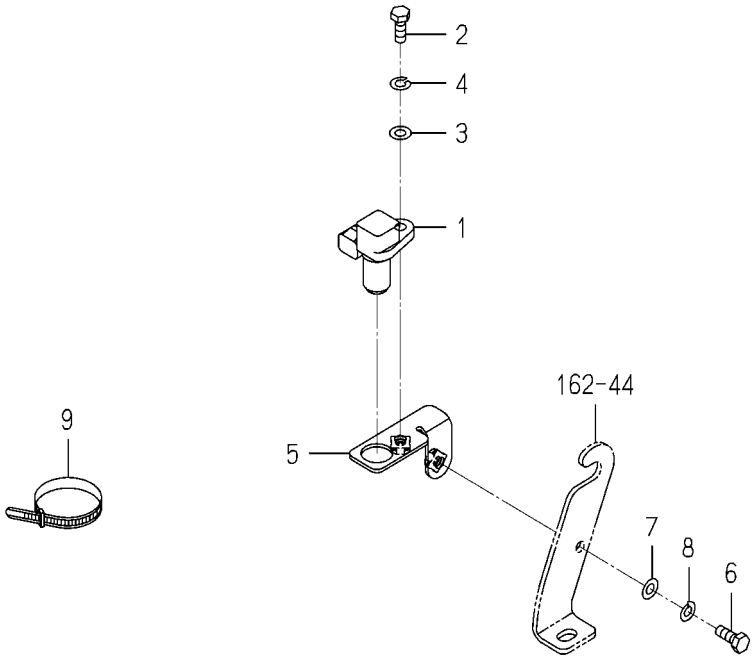

8844-548 -0100

KEY	PART CODE	DESCRIPTION	SPC	TYPE OF MODEL PZ80E16		ITC	COL	GRP	REMARKS
1	2204-207-011-00	SENSOR	*	1					
2	V200-700-601-60	BOLT	*	1					
3	V411-700-006-00	WASHER	*	1					
4	V401-700-006-00	WASHER/LOCK	*	1					
5	8844-548-200-00	PLATE/SENSORBAS COMP	*	1					
6	V200-700-601-60	BOLT	*	1 100001-					
7	V411-700-006-00	WASHER	*	1 100001-					
8	V401-700-006-00	WASHER/LOCK	*	1 100001-					
9	1376-402-003-00	BAND,WIRE/140	*	1					

FIG.165 FRAME SYSTEM(F TYPE)

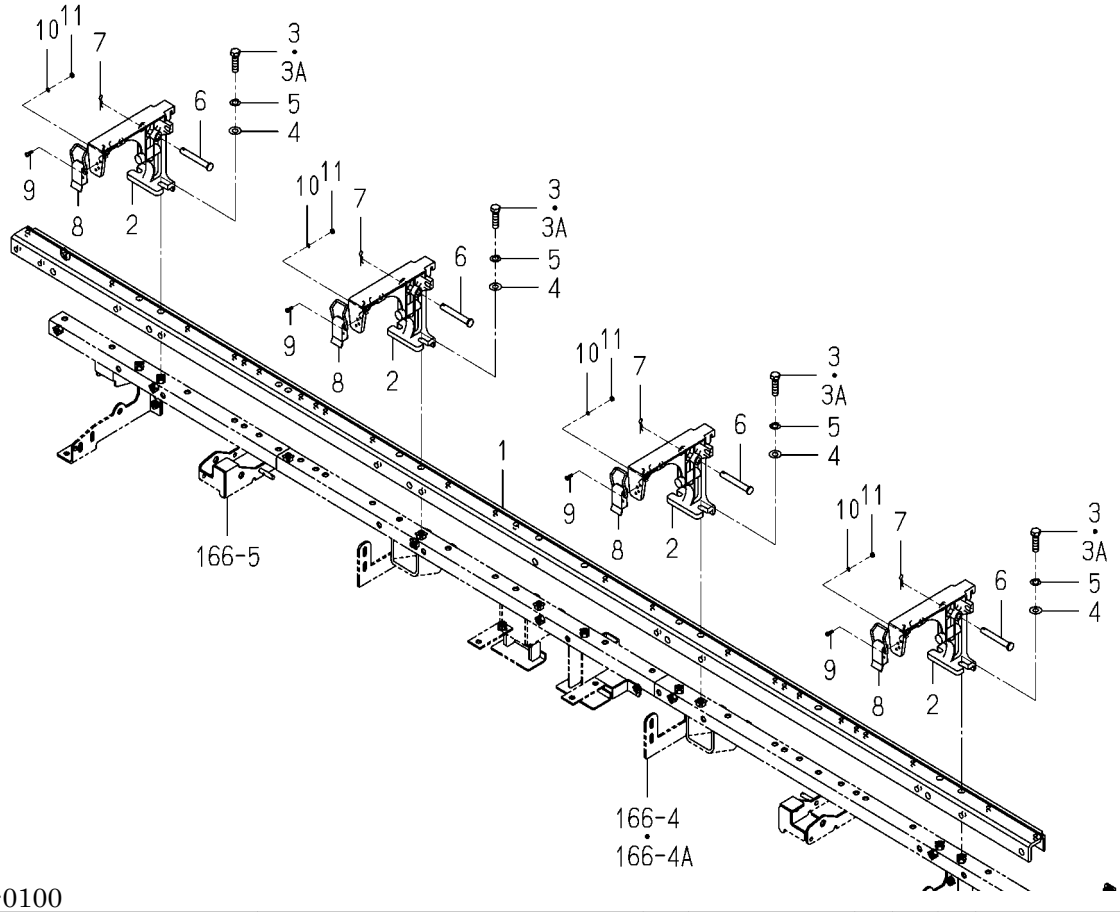

8844-608 -0100

KEY	PART CODE	DESCRIPTION	SPC	TYPE OF MODEL PZ80E16		ITC	COL	GRP	REMARKS
1	8844-608-001-00	FRAME/8	*	1					
2	8842-605-002-30	STAY	*	4					
3	V200-700-803-00	BOLT	*	8 -102290					
3A	8842-505-036-00	BOLT/M8X30	*	8 102291-					
4	V411-700-008-00	WASHER	*	8					
5	V401-700-008-00	WASHER/LOCK	*	8					
6	1329-106-002-00	PIN,STAND	*	4					
7	3908-170-020-00	PIN/SNAP/08	*	4					
8	8836-508-001-00	HOOK	*	4					
9	8836-506-005-00	SCREW,TAPPING/M3	*	8					
10	V401-700-003-00	WASHER/LOCK	*	8					
11	V301-700-003-00	NUT	*	8					

FIG.166 FRAME(FERTILIZER)SYSTEM(F TYPE)(1/2)

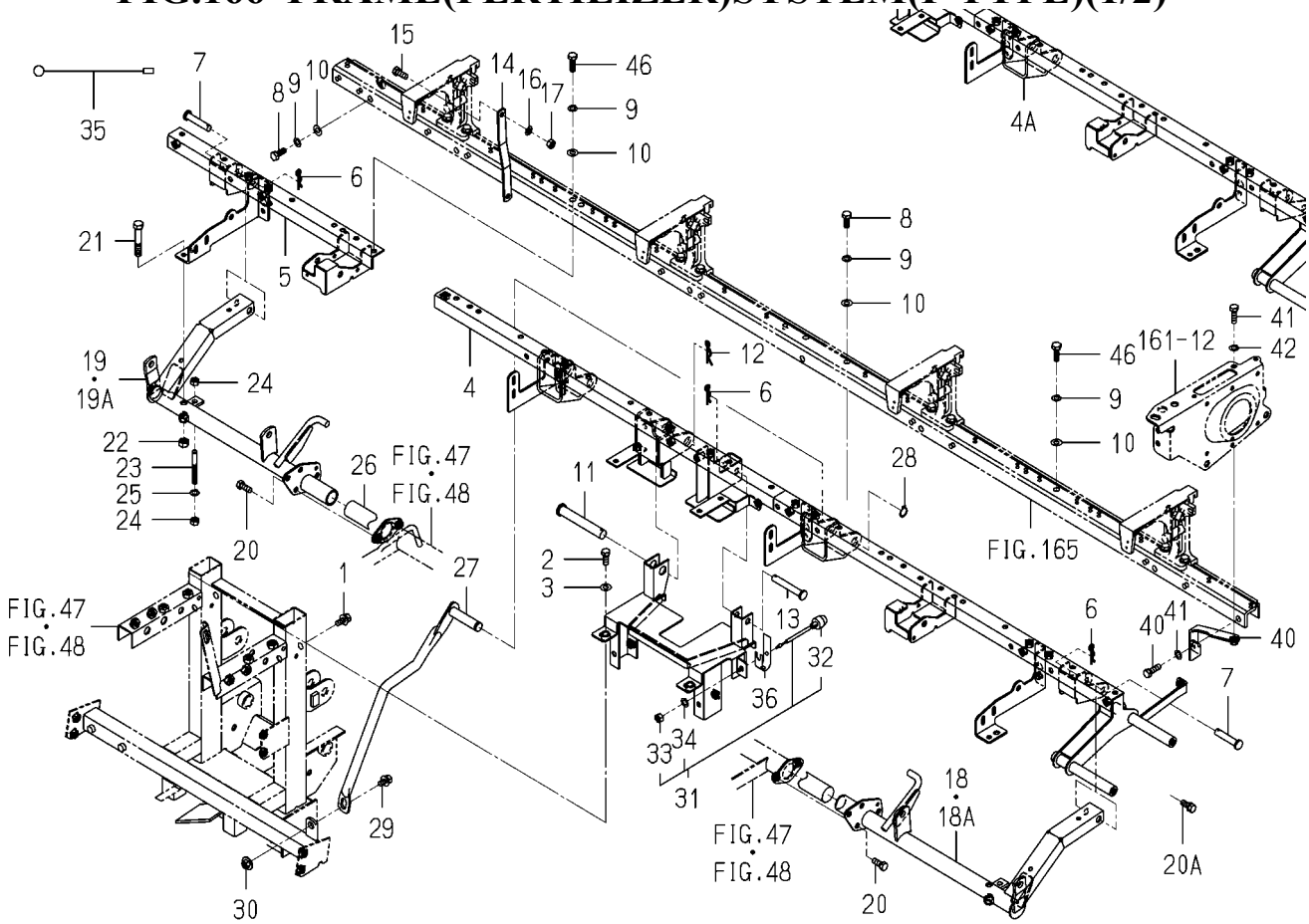

8844-618A-0100

KEY	PART CODE	DESCRIPTION	SPC	TYPE OF MODEL PZ80E16		ITC	COL	GRP	REMARKS
1	V211-360-802-00	BOLT/SP	*	2 100001-					
2	V201-700-802-00	BOLT	*	2 100001-					
3	V411-700-008-00	WASHER	*	2 100001-					
4	8844-618-250-20	FRAME/8/CENTER COMP	*	1 -102349					
4A	8844-618-250-30	FRAME/8/CENTER COMP	*	1 102350-		1			
5	8844-618-260-10	FRAME/8/RH COMP	*	1 100001-					
6	1305-241-001-00	PIN,HAIR	*	3 100001-					
7	3610-490-006-00	PIN	*	2 100001-					
8	8842-405-033-00	BOLT/M8X20/SUS	*	6 100001-					
9	V401-700-008-00	WASHER/LOCK	*	8 100001-					
10	V411-700-008-00	WASHER	*	8 100001-					
11	2132-407-003-00	PIN/CYLINDER	*	1 100001-					
12	2130-525-014-00	PIN,HAIR/16	*	1 100001-					
13	8844-616-001-00	PIN/10X070	*	1 100001-					
14	8844-615-003-00	PLATE/HOPPER	*	4 100001-					
15	8842-505-037-00	BOLT/M8X20	*	8 100001-					
16	V401-700-008-00	WASHER/LOCK	*	8 100001-					
17	8842-505-038-00	NUT/M8	*	8 100001-					
18	8844-618-310-20	BASE/FRAM/8/LH	*	1 -102260					
18A	8844-618-310-30	BASE/FRAME/8/LH COMP	*	1 102261-		1			
19	8844-618-320-20	BASE/FRAME/8/RH	*	1 -102260					
19A	8844-618-320-30	BASE/FRAME/8/RH COMP	*	1 102261-		1			
20	V211-360-802-00	BOLT/SP	*	4 -102349					
20A	V211-560-802-00	BOLT/M8X20	*	4 102350-					
21	V201-361-006-50	BOLT	*	2 100001-					
22	V304-260-010-00	NUT	*	2 100001-					
23	8844-615-006-00	PIN/SET	*	2 100001-					
24	V304-260-008-00	NUT	*	4 100001-					
25	V401-160-008-00	WASHER,SP/M 8	*	2 100001-					
26	2213-320-004-00	TUBE/1040	*	1 -100349					

FIG.166 FRAME(FERTILIZER)SYSTEM(F TYPE)(2/2)

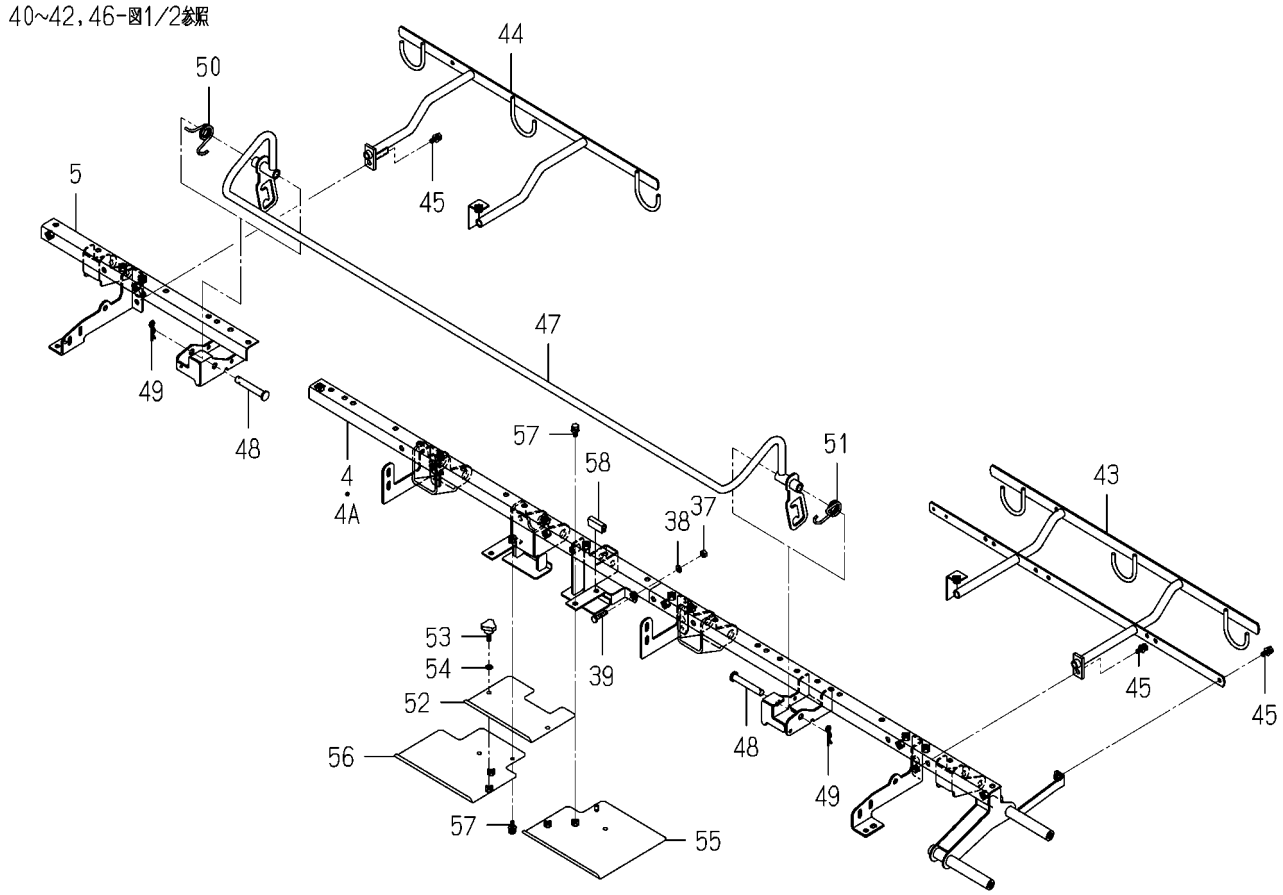

8844-618A-0100

KEY	PART CODE	DESCRIPTION	SPC	TYPE OF MODEL PZ80E16		ITC	COL	GRP	REMARKS
27	8844-618-330-10	TUBE/STAY/8 COMP	*	1 100001-					
28	2145-770-014-00	RING, SNAP	*	1 100001-					
29	V211-360-801-60	BOLT,SEMS (SP)	*	1 100001-					
30	V363-260-008-00	NUT/WASHER	*	1 100001-					
31	2145-542-230-00	SWITCH,PUSH	*	1 100001-					
32	2145-542-232-10	BOOT	*	1 100001-					
33	V401-160-008-00	WASHER,SP/M 8	*	1 100001-					
34	V335-260-008-00	NUT	*	1 100001-					
35	8836-502-203-00	HARNESS/SWGND	*	1 100001-					
36	8838-741-004-00	PLATE	*	1 100001-					
37	V301-700-006-00	NUT	*	1 100001-					
38	V401-700-006-00	WASHER/LOCK	*	1 100001-					
39	V200-700-602-50	BOLT	*	1 100001-					
40	8844-616-330-00	PLATE/BLOWER/UP	*	1 100001-					
41	V201-700-801-60	BOLT	*	2 100001-					
42	V401-700-008-00	WASHER/LOCK	*	2 100001-					
43	8844-628-220-10	STAY/DUCT/REAR/ COMP	*	1 100001-			6G		
44	8844-627-230-20	STAY/DUCT/REAR/7R	*	1 100001-			6G		
45	8843-534-002-00	BOLT/M6X16/SP/SUS	*	3 100001-					
46	8842-405-034-00	BOLT/M8X25/SUS	*	2 100001-					
47	8844-618-400-00	LEVER/ROCK/8 COMP	*	1 100001-					
48	2144-519-003-00	PIN/10X64	*	2 100001-					
49	1305-241-001-00	PIN,HAIR	*	2 100001-					
50	8844-616-007-00	SPRING/HT022L	*	1 100001-					
51	8844-616-008-00	SPRING/HT022R	*	1 100001-					
52	8844-618-007-10	COVER/FERTILEZE/8/C	*	1 100001-					
53	3256-702-004-00	BOLT,KNOB(M6)	*	2 100001-					
54	V401-700-006-00	WASHER/LOCK	*	2 100001-					
55	8844-618-550-00	COVER/FERTILEZE/8/LH	*	1 100001-					
56	8844-618-560-00	COVER/FERTILEZE/8/RH	*	1 100001-					

FIG.166 FRAME(FERTILIZER)SYSTEM(F TYPE)(2/2)

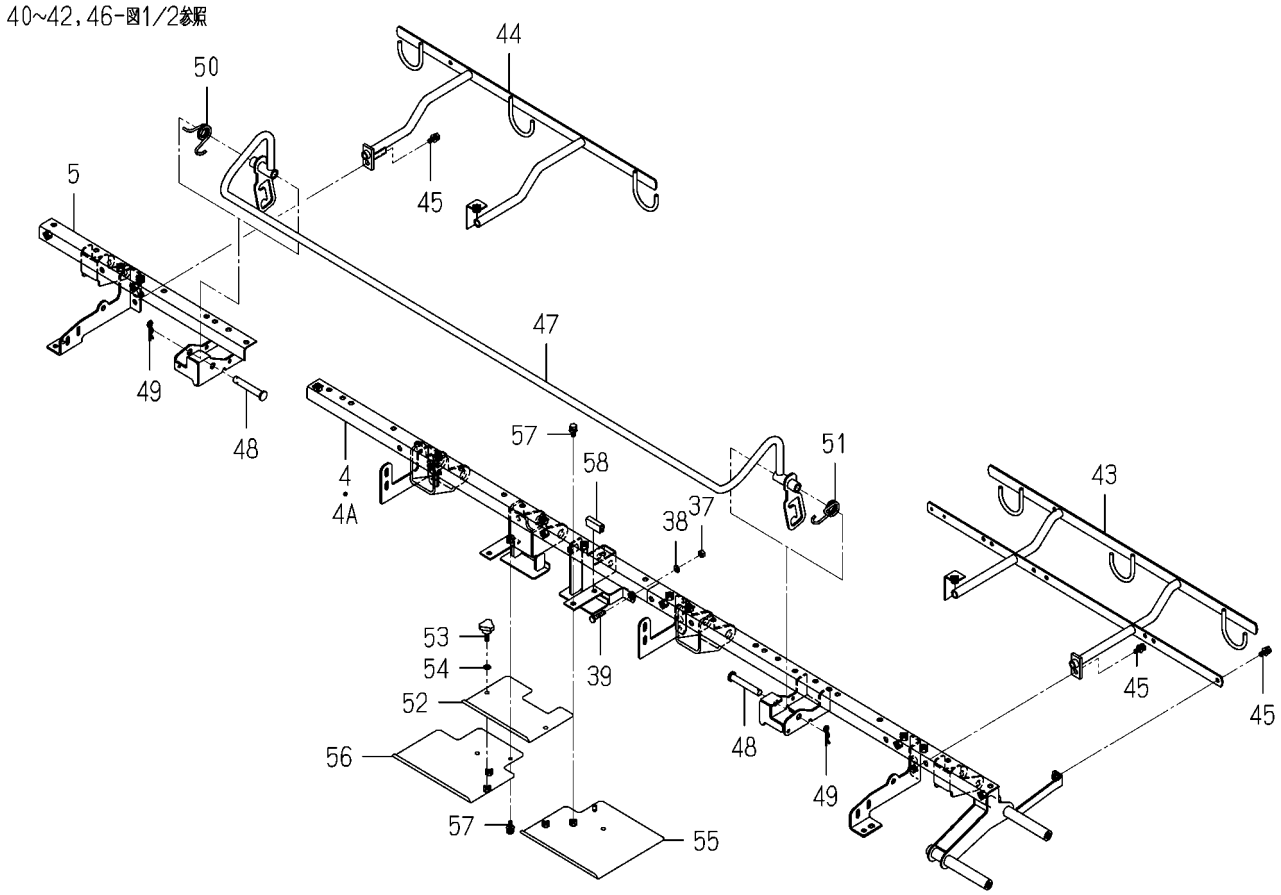

8844-618A-0100

KEY	PART CODE	DESCRIPTION	SPC	TYPE OF MODEL PZ80E16		ITC	COL	GRP	REMARKS
57	8843-534-002-00	BOLT/M6X16/SP/SUS	*	3 100001-					
58	2186-414-002-00	PROTECTOR	*	1 100001-					

FIG.167 BLOWER SYSTEM(F TYPE)

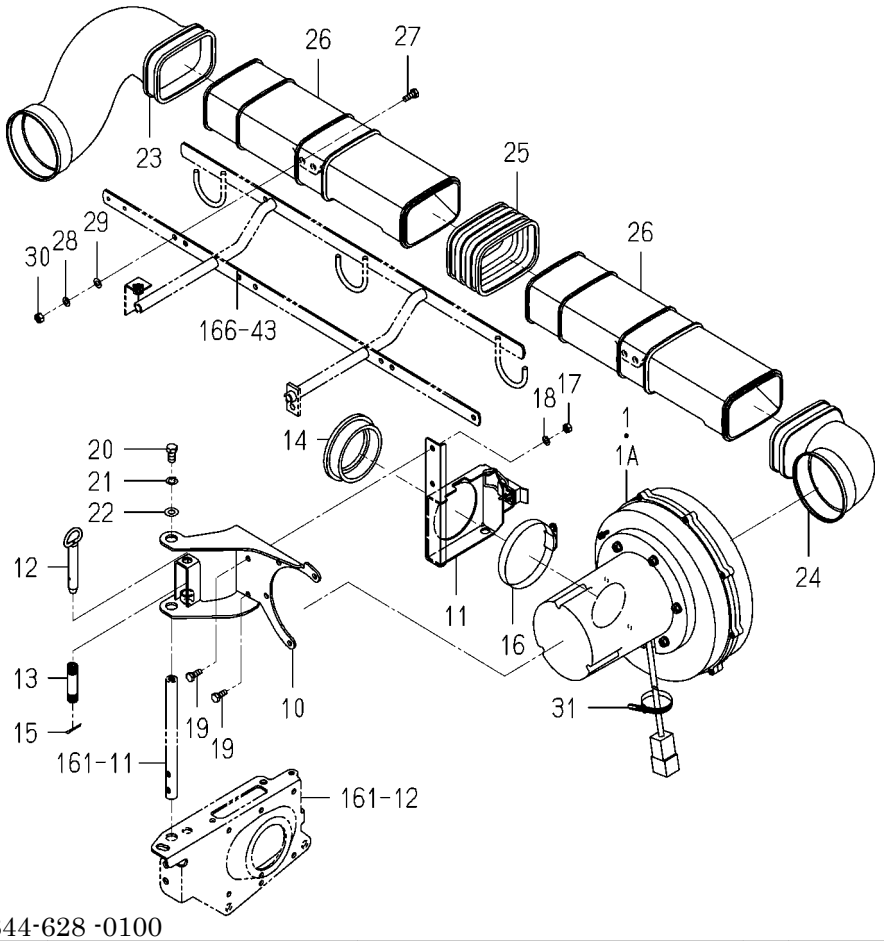

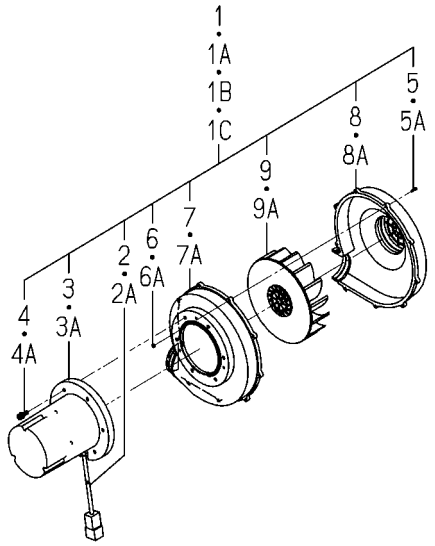

8844-628 -0100

KEY	PART CODE	DESCRIPTION	SPC	TYPE OF MODEL PZ80E16		ITC	COL	GRP	REMARKS
1	8842-628-300-10	BLOWER/FG/B	*	1 -101744					
1A	8844-629-300-00	BLOWER/FZ/B ASSY	*	1 -102260					
1B	8844-629-300-10	BLOWER/FZ/B ASSY	*	1 -102399		1			
1C	8844-629-300-20	BLOWER/FZ/B ASSY	*	1 102400-		1			
2	8844-629-310-00	MOTORBRUSH/FZ ASSY	*	1 -102399					
2A	8844-629-310-10	MOTORBRUSH/FZ ASSY	*	1 102400-		1			
3	8842-625-407-00	CAP,MOTOR	*	1 -101744					
3A	8844-629-307-00	MOTORCAP/LARGE	*	1 101745-					
4	8842-625-409-00	BOLT/M6X2	*	6 -101744					
4A	8842-625-409-00	BOLT/M6X2	*	6 101745-					
5	8842-625-408-00	SCREW/M3X	*	9 -101744					
5A	8842-625-408-00	SCREW/M3X	*	9 101745-					
6	V301-700-003-00	NUT	*	9 -101744					
6A	V301-700-003-00	NUT	*	9 101745-					
7	8842-625-404-00	CASING/INNER	*	1 -101744					
7A	8844-629-304-10	CASING/IN/FZ	*	1 101745-		1			
8	8842-625-405-00	CASING/OUTER/PG	*	1 -101744					
8A	8844-629-305-00	CASING/OUT/FZ	*	1 101745-					
9	8842-625-406-00	FAN	*	1 -101744					
9A	8844-629-306-00	FAN	*	1 101745-					
10	8843-624-220-00	FLANGE,BLOWER/FG	*	1					
11	8843-624-210-00	STAY,BLOWER/FG	*	1					
12	8836-701-230-10	PIN,LOCK	*	1					
13	8836-701-004-00	SPRING/HC055	*	1					
14	8843-624-004-00	JOINT,BLOWER	*	1					
15	V500-162-502-00	PIN,SPLIT/2.5X20	*	1					
16	J061-170-090-00	CLAMP/WORM/70-90	*	1					
17	V301-700-006-00	NUT	*	2					
18	V401-700-006-00	WASHER/LOCK	*	2					
19	V200-700-601-60	BOLT	*	2					

FIG.167 BLOWER SYSTEM(F TYPE)

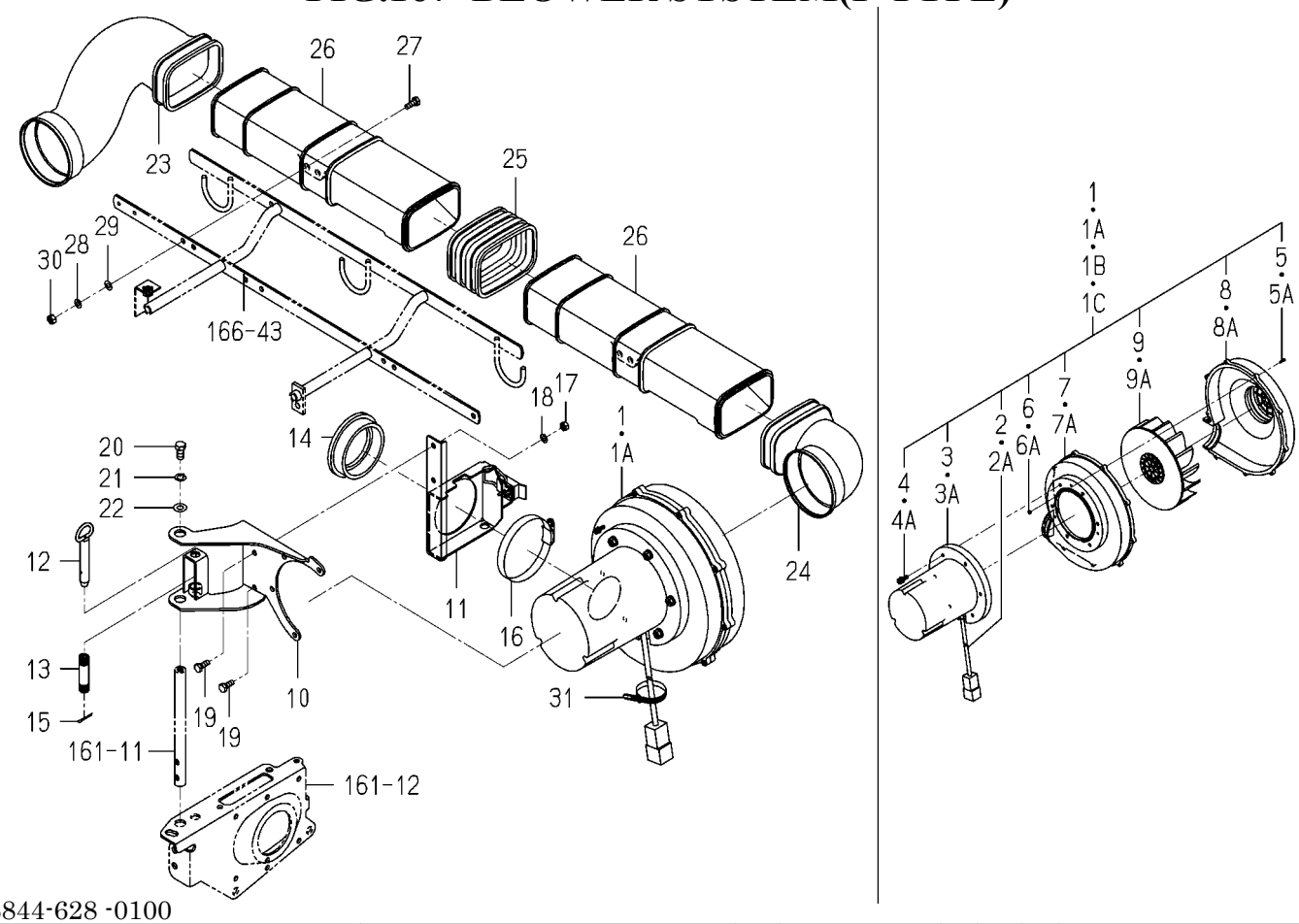

8844-628 -0100

KEY	PART CODE	DESCRIPTION	SPC	TYPE OF MODEL PZ80E16		ITC	COL	GRP	REMARKS
20	V201-700-801-60	BOLT	*	1					
21	V401-700-008-00	WASHER/LOCK	*	1					
22	V411-700-008-00	WASHER	*	1 100001-					
23	8836-749-002-00	JOINT,BLOWER/8	*	1					
24	8842-625-001-00	JOINT,BLOWER	*	1					
25	8842-628-001-00	JOINT,FEED/DUCT	*	1					
26	8842-628-002-00	HOSE,DUCT/8/LH	*	2					
27	V200-700-602-00	BOLT	*	4 100001-					
28	V401-700-006-00	WASHER/LOCK	*	8 100001-					
29	V411-700-006-00	WASHER	*	4 100001-					
30	V301-700-006-00	NUT	*	2					
31	1376-402-003-00	BAND,WIRE/140	*	1					

FIG.168 PLATE(STEP)SYSTEM(D-F TYPE)

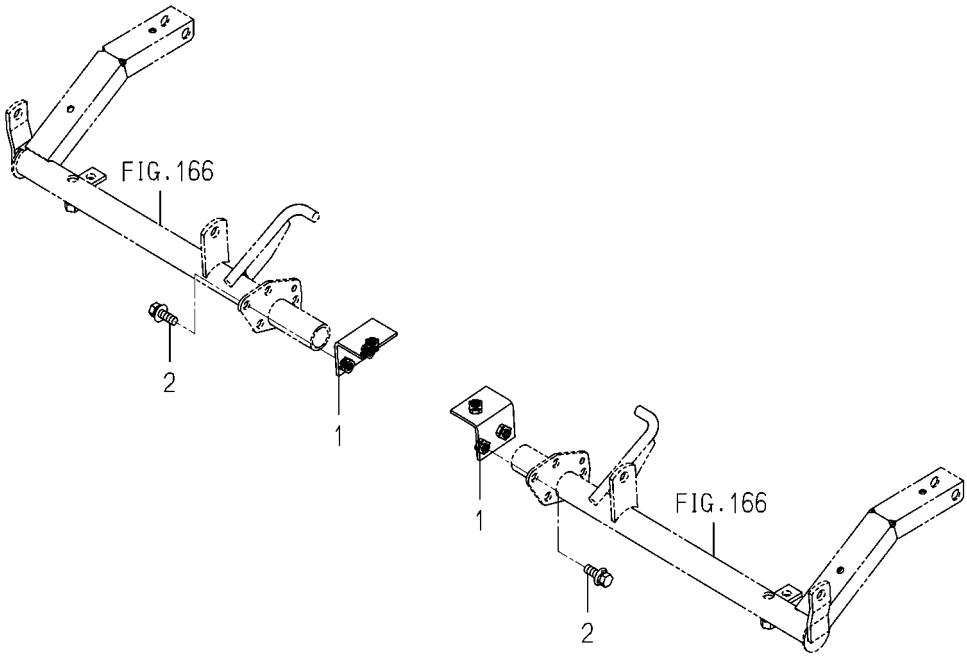

8844-638 -0100

KEY	PART CODE	DESCRIPTION	SPC	TYPE OF MODEL PZ80E16		ITC	COL	GRP	REMARKS
1	8844-618-540-00	PLATE/STEP/F	*	2					
2	V211-360-802-00	BOLT/SP	*	4					

FIG.169 SEND OUT SYSTEM(F TYPE)(1/3)

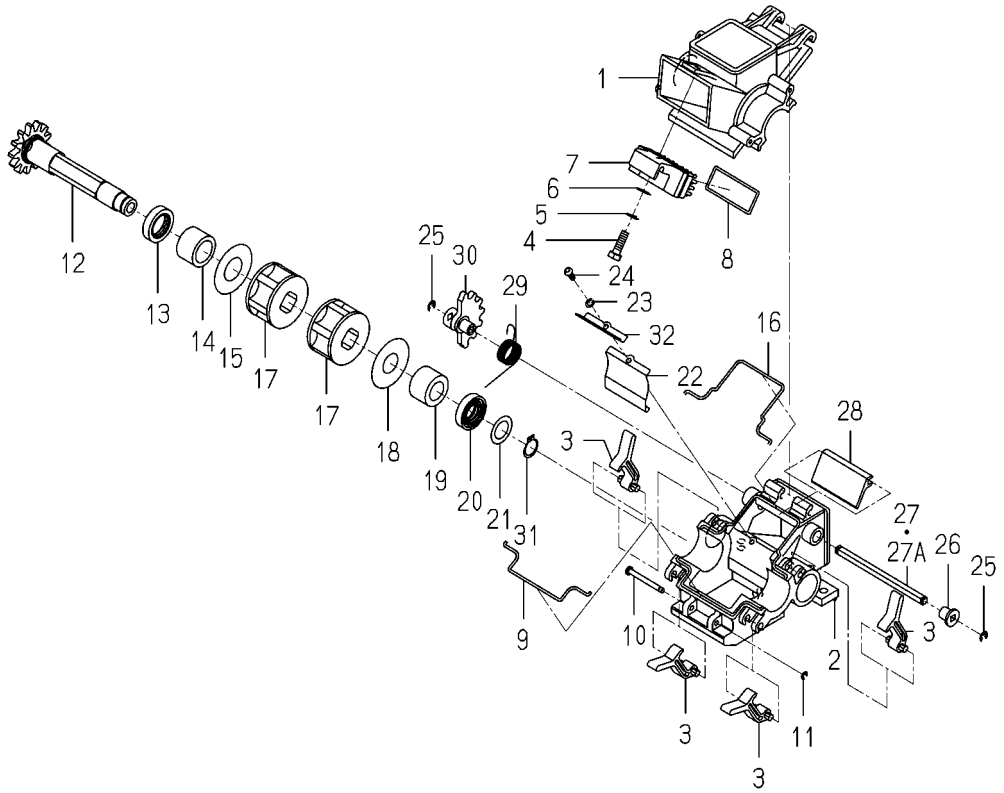

8844-708 -0100

KEY	PART CODE	DESCRIPTION	SPC	TYPE OF MODEL PZ80E16		ITC	COL	GRP	REMARKS
1	8842-705-201-00	CAUPSULE,UPPER	*	4					
2	8842-705-202-00	CAUPSULE,LOWER	*	4					
3	8842-705-223-00	HOOK,COUPSULE	*	16					
4	V200-700-601-60	BOLT	*	4					
5	V401-700-006-00	WASHER/LOCK	*	4					
6	V411-700-006-00	WASHER	*	4					
7	8842-705-220-00	BRUSH	*	4					
8	8842-705-203-00	RING,BRUSH	*	4					
9	8842-705-205-00	PACKING,CAPSULE/LOWE	*	4					
10	8841-701-027-00	PIN/41	*	4					
11	2145-770-214-00	RING, SNAP	*	4					
12	8842-705-214-10	GEAR,SPUR/13	*	4					
13	V744-120-300-70	SEAL,OIL/TC20307	*	4					
14	8842-705-215-00	BUSH,GEAR	*	4					
15	8842-705-216-00	WASHER/21X45X01	*	4					
16	8842-705-204-00	PACKING,CAPSULE/UPPE	*	4					
17	8842-705-217-00	ROLL	*	8					
18	8842-705-224-00	WASHER/18X45X1	*	4					
19	8842-705-218-00	BUSH/17X28X19	*	4					
20	V744-115-300-70	SEAL,OIL/TC15307	*	4					
21	8842-705-219-00	WASHER/16X25X0.4	*	4					
22	8842-705-207-00	PLATE,COUPSULE	*	4					
23	V401-700-004-00	WASHER/LOCK	*	4					
24	V111-704-001-00	SCREW	*	4					
25	8841-536-011-00	RING, SNAP	*	8					
26	8842-705-208-00	BUSH,EXHAUST LEVER	*	4					
27	8842-705-211-00	SHAFT,EXHAUST	*	4 -101649					
27A	8842-705-211-10	SHAFT/DISCHARGE	*	4 101650-		1			
28	8842-705-209-00	SHUTTER,EXHAUST	*	4					
29	8842-705-213-00	SPRING/HT020/L	*	4					

FIG.169 SEND OUT SYSTEM(F TYPE)(2/3)

30~32-図1/3参照

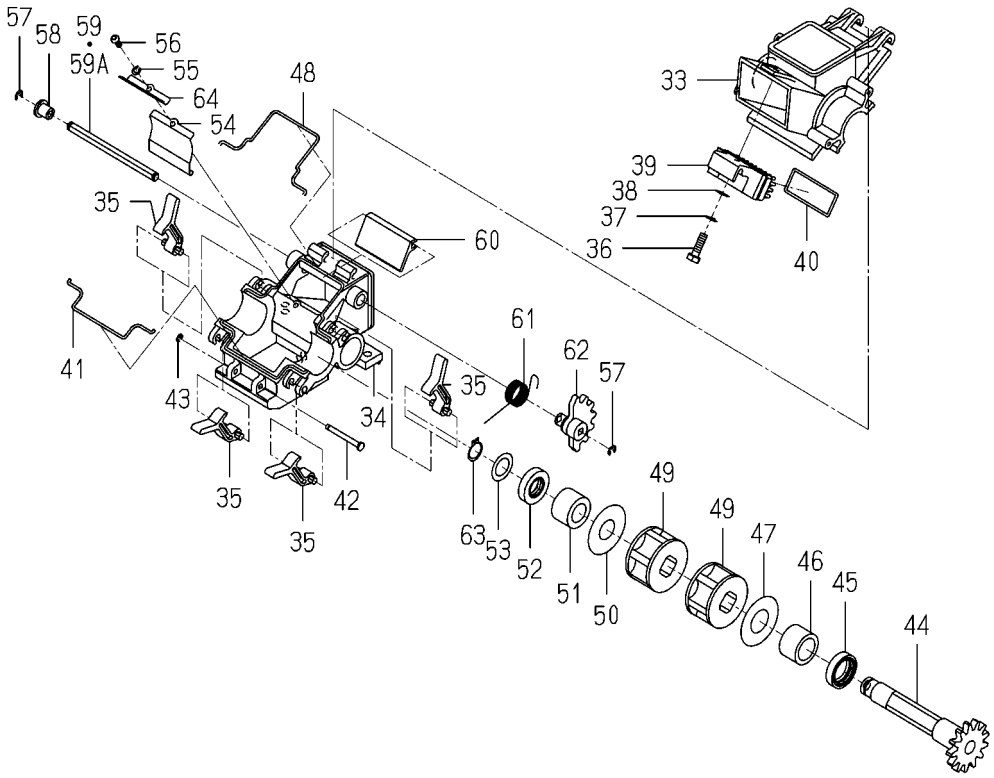

8844-708 -0100

KEY	PART CODE	DESCRIPTION	SPC	TYPE OF MODEL PZ80E16		ITC	COL	GRP	REMARKS
30	8842-705-024-00	GEAR,EXHAUST SHUTTER	*	4					
31	2145-770-014-00	RING, SNAP	*	4					
32	8842-705-221-00	PLATE,COUPSULE/UPPER	*	4					
33	8842-705-201-00	CAUPSULE,UPPER	*	4					
34	8842-705-202-00	CAUPSULE,LOWER	*	4					
35	8842-705-223-00	HOOK,COUPSULE	*	16					
36	V200-700-601-60	BOLT	*	4					
37	V401-700-006-00	WASHER/LOCK	*	4					
38	V411-700-006-00	WASHER	*	4					
39	8842-705-220-00	BRUSH	*	4					
40	8842-705-203-00	RING,BRUSH	*	4					
41	8842-705-205-00	PACKING,CAPSULE/LOWE	*	4					
42	8841-701-027-00	PIN/41	*	4					
43	2145-770-214-00	RING, SNAP	*	4					
44	8842-705-214-10	GEAR,SPUR/13	*	4					
45	V744-120-300-70	SEAL,OIL/TC20307	*	4					
46	8842-705-215-00	BUSH,GEAR	*	4					
47	8842-705-216-00	WASHER/21X45X01	*	4					
48	8842-705-204-00	PACKING,CAPSULE/UPPE	*	4					
49	8842-705-217-00	ROLL	*	8					
50	8842-705-224-00	WASHER/18X45X1	*	4					
51	8842-705-218-00	BUSH/17X28X19	*	4					
52	V744-115-300-70	SEAL,OIL/TC15307	*	4					
53	8842-705-219-00	WASHER/16X25X0.4	*	4					
54	8842-705-207-00	PLATE,COUPSULE	*	4					
55	V401-700-004-00	WASHER/LOCK	*	4					
56	V111-704-001-00	SCREW	*	4					
57	8841-536-011-00	RING, SNAP	*	8					
58	8842-705-208-00	BUSH,EXHAUST LEVER	*	4					
59	8842-705-211-00	SHAFT,EXHAUST	*	4 -101649					

FIG.169 SEND OUT SYSTEM(F TYPE)(3/3)

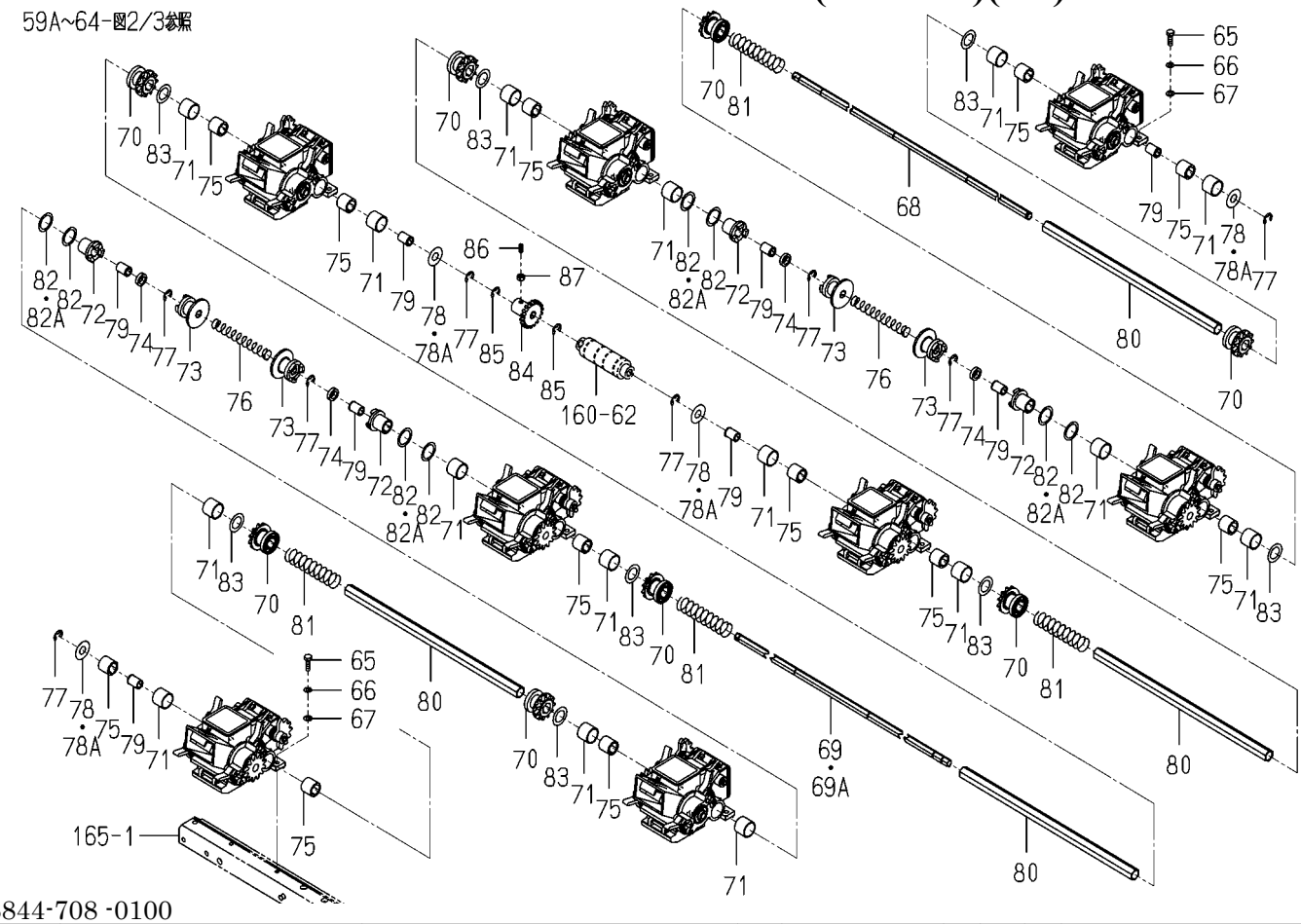

8844-708 -0100

KEY	PART CODE	DESCRIPTION	SPC	TYPE OF MODEL PZ80E16		ITC	COL	GRP	REMARKS
59A	8842-705-211-10	SHAFT/DISCHARGE	*	4 101650-		1			
60	8842-705-209-00	SHUTTER,EXHAUST	*	4					
61	8842-706-201-00	SPRING/HT020/R	*	4					
62	8842-705-024-00	GEAR,EXHAUST SHUTTER	*	4					
63	2145-770-014-00	RING, SNAP	*	4					
64	8842-705-221-00	PLATE,COUPSULE/UPPER	*	4					
65	V200-700-602-00	BOLT	*	16					
66	V401-700-006-00	WASHER/LOCK	*	16					
67	V411-700-006-00	WASHER	*	16					
68	8844-706-001-00	SHAFT/6/L	*	1					
69	8844-708-003-00	SHAFT/FERTILIZE/8RH/	*	1 -102192					
69A	8844-708-003-10	SHAFT/FERTILIZE/8RH/	*	1 102193-		1			
70	8842-705-004-20	GEAR,SPUR/11	*	8					
71	8842-705-206-00	BUSH/22X25X20	*	16					
72	8842-705-005-00	CLUTCH,FEEDING	*	4					
73	8842-705-006-00	CLUTCH,FEEDING DRIVE	*	4					
74	8842-705-027-00	HUB/12X19X05	*	4					
75	8842-705-009-00	BUSH, FEEDING DRIVE	*	12					
76	8842-705-029-00	SPRING/HC115	*	2					
77	8842-515-022-00	RING, SNAP	*	8 100001-					
78	8842-705-014-00	WASHER/13X30X0.4	*	4 -102290					
78A	8842-705-018-00	WASHER/13X30X01	*	4 102291-					
79	2186-805-003-00	BUSH,SEEDLING	*	8					
80	8842-705-002-00	SHAFT,GEAR	*	4					
81	8842-705-017-00	SPRING/HC100	*	4					
82	8842-705-015-00	WASHER/23X30X0.4	*	8 -102290					
82A	8842-705-019-00	WASHER/23X30X01	*	4 102291-					
83	8842-705-016-00	WASHER/19X30X0.4	*	8					
84	8844-548-210-00	GEAR/SENSOR COMP	*	1					
85	8842-515-022-00	RING, SNAP	*	2 -102192					

FIG.169 SEND OUT SYSTEM(F TYPE)(3/3)

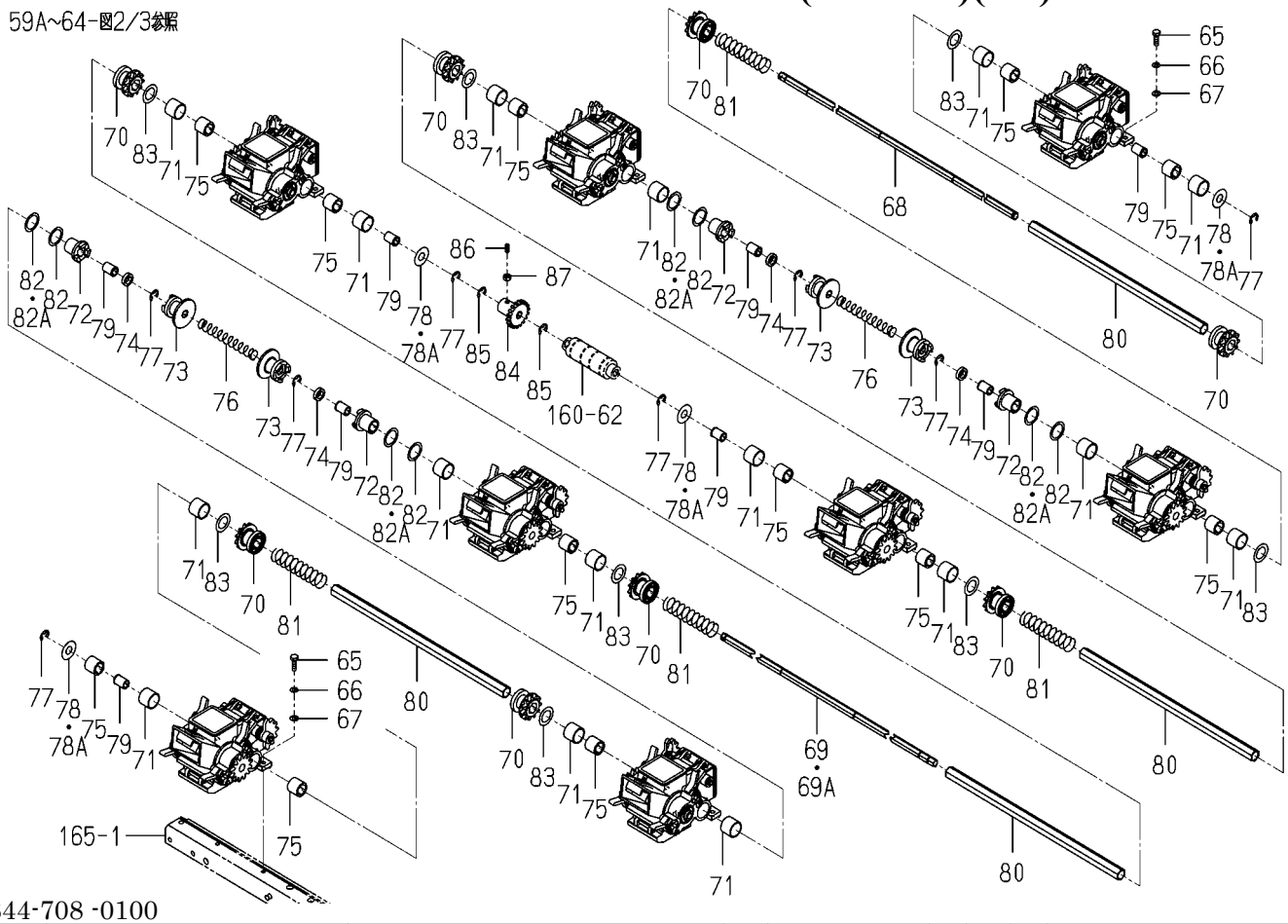

8844-708 -0100

KEY	PART CODE	DESCRIPTION	SPC	TYPE OF MODEL PZ80E16		ITC	COL	GRP	REMARKS
86	V180-446-001-20	SCREW/SET	*	1					
87	V301-700-006-00	NUT	*	1					

FIG.170 HOPPER SYSTEM(F TYPE)(NO.100001-101649)

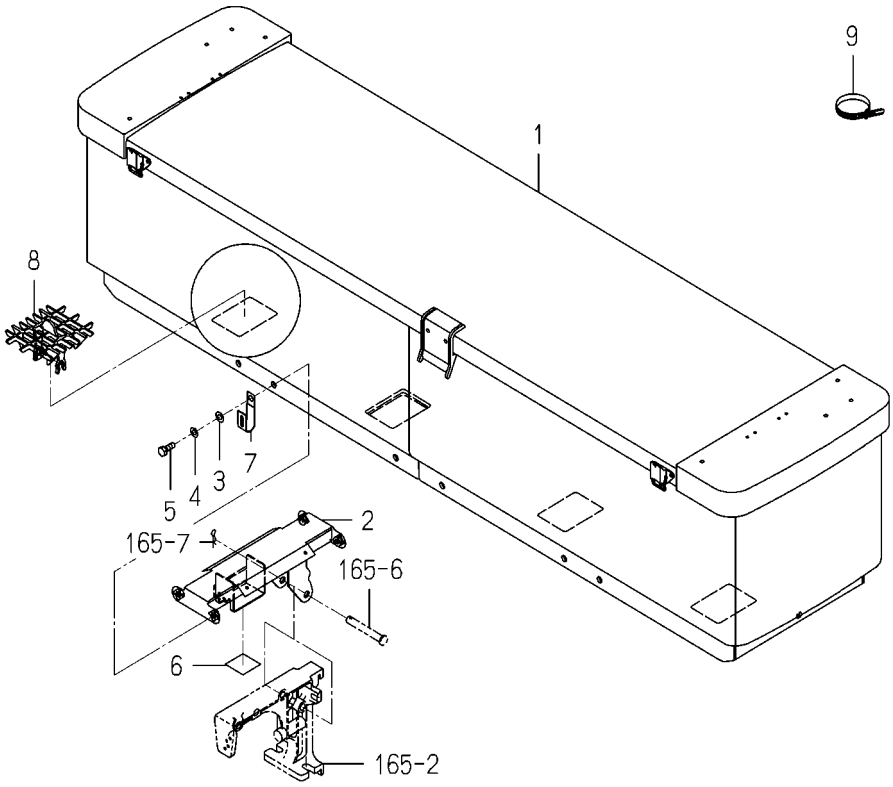

8844-718 -0100

KEY	PART CODE	DESCRIPTION	SPC	TYPE OF MODEL PZ80E16		ITC	COL	GRP	REMARKS
1	8844-718-200-10	HOPPER/4/PZ ASSY	*	2 -101649					FIG 197
2	8844-718-230-00	STAY/HOPPER/8 COMP	*	4 -101649					
3	V411-700-006-00	WASHER	*	16 -101649					
4	V401-700-006-00	WASHER/LOCK	*	16 -101649					
5	V200-700-601-60	BOLT	*	16 -101649					
6	8842-605-004-10	PLATE,RUBBER/20X25X0	*	4 -101649					
7	3612-631-001-00	CLAMP,WINKER B	*	8 -101649					
8	8844-718-002-00	HOPPERNET/PZ	*	8 -101649					
9	1376-402-003-00	BAND,WIRE/140	*	16 -101649					

FIG.171 HOPPER SYSTEM(F TYPE)(NO.101650-)

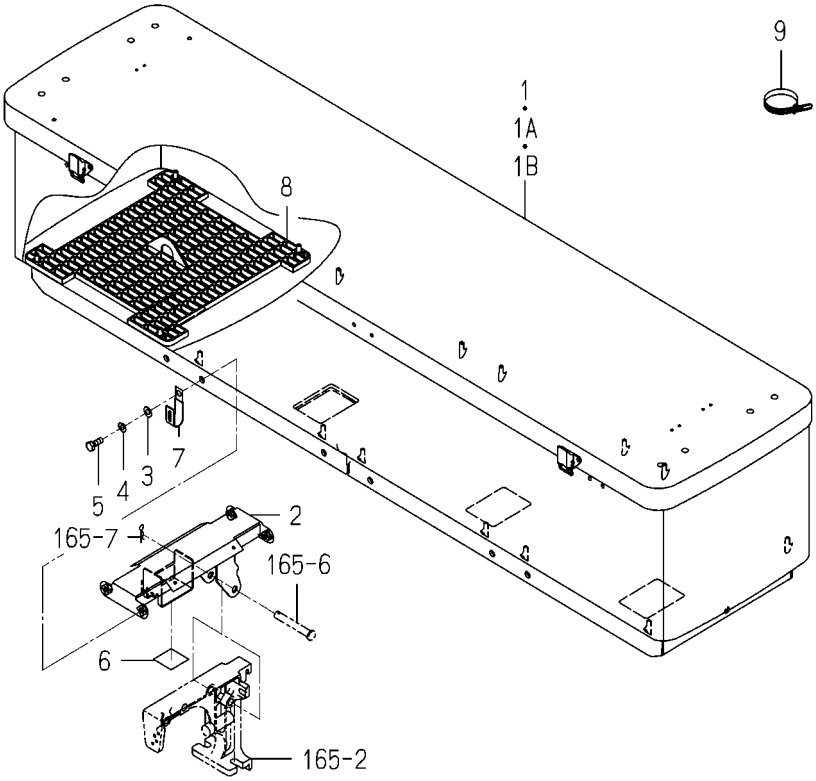

8844-718K-0100

KEY	PART CODE	DESCRIPTION	SPC	TYPE OF MODEL PZ80E16		ITC	COL	GRP	REMARKS
1	8844-718-310-00	HOPPER/4/K COMP	*	2 -101744					FIG 198
1A	8844-718-310-30	HOPPER/4/K COMP	*	2 -102221		1			FIG 198
1B	8844-718-310-40	HOPPER/4/K COMP	*	2 102222-		1			FIG 198
2	8844-718-230-00	STAY/HOPPER/8 COMP	*	4 101650-					
3	V411-700-006-00	WASHER	*	16 101650-					
4	V401-700-006-00	WASHER/LOCK	*	16 101650-					
5	V200-700-601-60	BOLT	*	16 101650-					
6	8842-605-004-10	PLATE,RUBBER/20X25X0	*	4 101650-					
7	3612-631-001-00	CLAMP,WINKER B	*	8 101650-					
8	8844-718-006-00	HOPPERNET/PZ/UPPER	*	8 101650-					
9	1376-402-003-00	BAND,WIRE/140	*	16 101650-					

FIG.172 PIPING(FERTILIZER)SYSTEM(F TYPE)

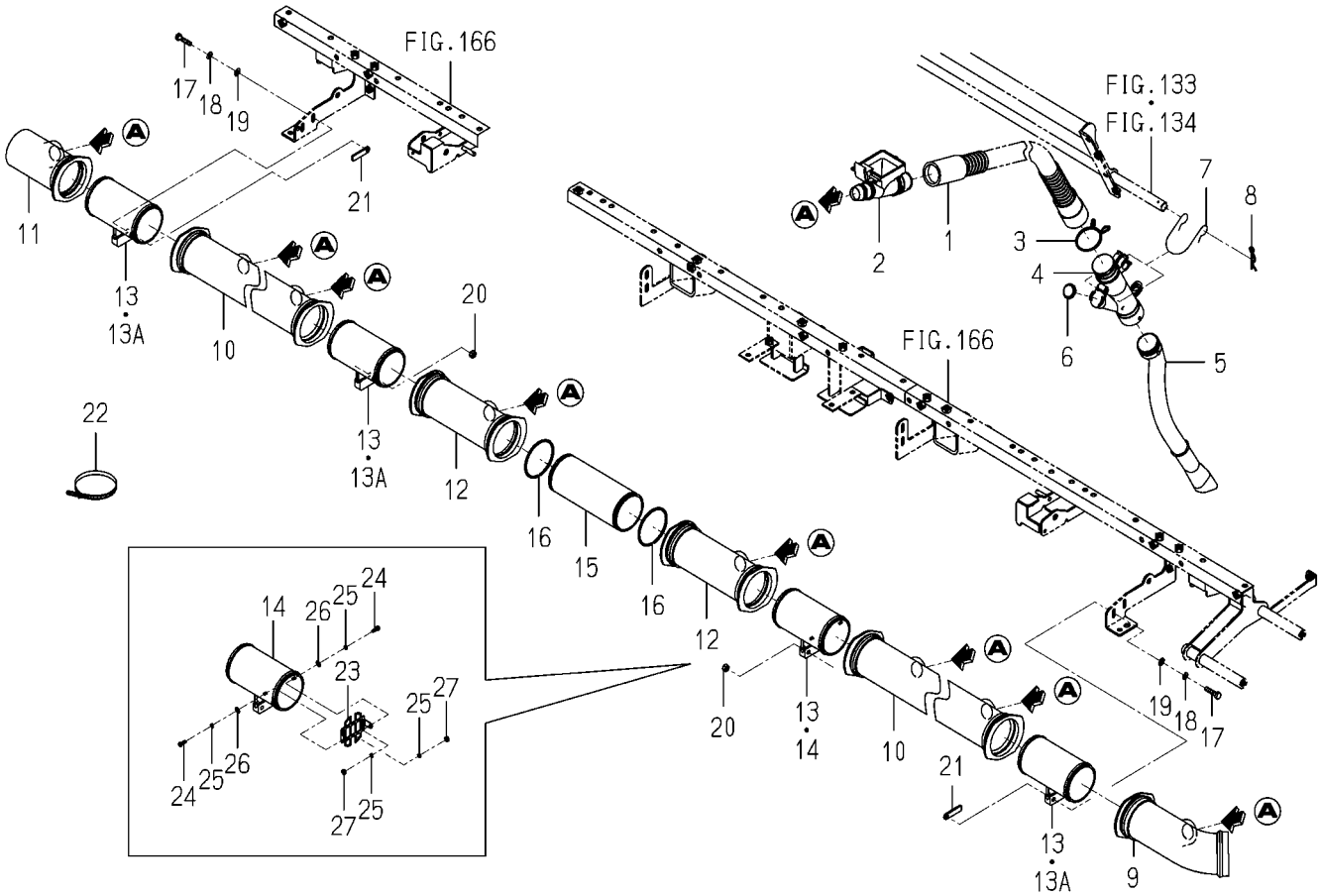

8844-728 -0100

KEY	PART CODE	DESCRIPTION	SPC	TYPE OF MODEL PZ80E16		ITC	COL	GRP	REMARKS
1	8844-727-200-00	HOSE/FERTILIZER/7	*	8					
2	8842-725-007-20	ROHTO	*	8					
3	8836-706-006-10	CLAMP,SPRING/4	*	8					
4	8844-725-310-10	HOSE/FERTILIZER/LOWE	*	8					
5	8844-725-031-10	HOSE/LOWER/PZ	*	8					
6	8836-706-400-00	WEIGHT,HOSE	*	8					
7	8844-725-002-00	HOOK	*	8					
8	2130-525-014-00	PIN,HAIR/16	*	4					
9	8842-725-001-00	JOINT,FEEDING/LH	*	1					
10	8842-725-002-00	JOINT,FEEDING/MIDDLE	*	2					
11	8842-725-003-00	JOINT,FEEDING/RH	*	1					
12	8842-725-004-10	JOINT,FEED	*	2					
13	8842-726-001-00	JOINT/6	*	4 -102010					
13A	8842-726-001-00	JOINT/6	*	3 102011-					
14	8844-728-003-00	JOINT/8Z	*	1 102011-					
15	8842-728-001-10	JOINT/8	*	1					
16	8842-729-003-00	RING,STOPPER	*	2					
17	V200-700-602-50	BOLT	*	4					
18	V401-700-006-00	WASHER/LOCK	*	4					
19	V411-700-006-00	WASHER	*	4					
20	V301-700-006-00	NUT	*	2					
21	8844-725-006-00	NUT/JOINT	*	2					
22	1342-402-006-00	BAND/WIRE/250	*	1					
23	8844-728-001-00	PLATE/CHANBER	*	1 102011-					
24	V111-704-001-20	SCREW	*	2 102011-					
25	V401-700-004-00	WASHER/LOCK	*	4 102011-					
26	V411-700-004-00	WASHER	*	2 102011-					
27	V301-700-004-00	NUT	*	2 102011-					

FIG.173 CLUTCH(FERTILIZE)SYSTEM(F TYPE)

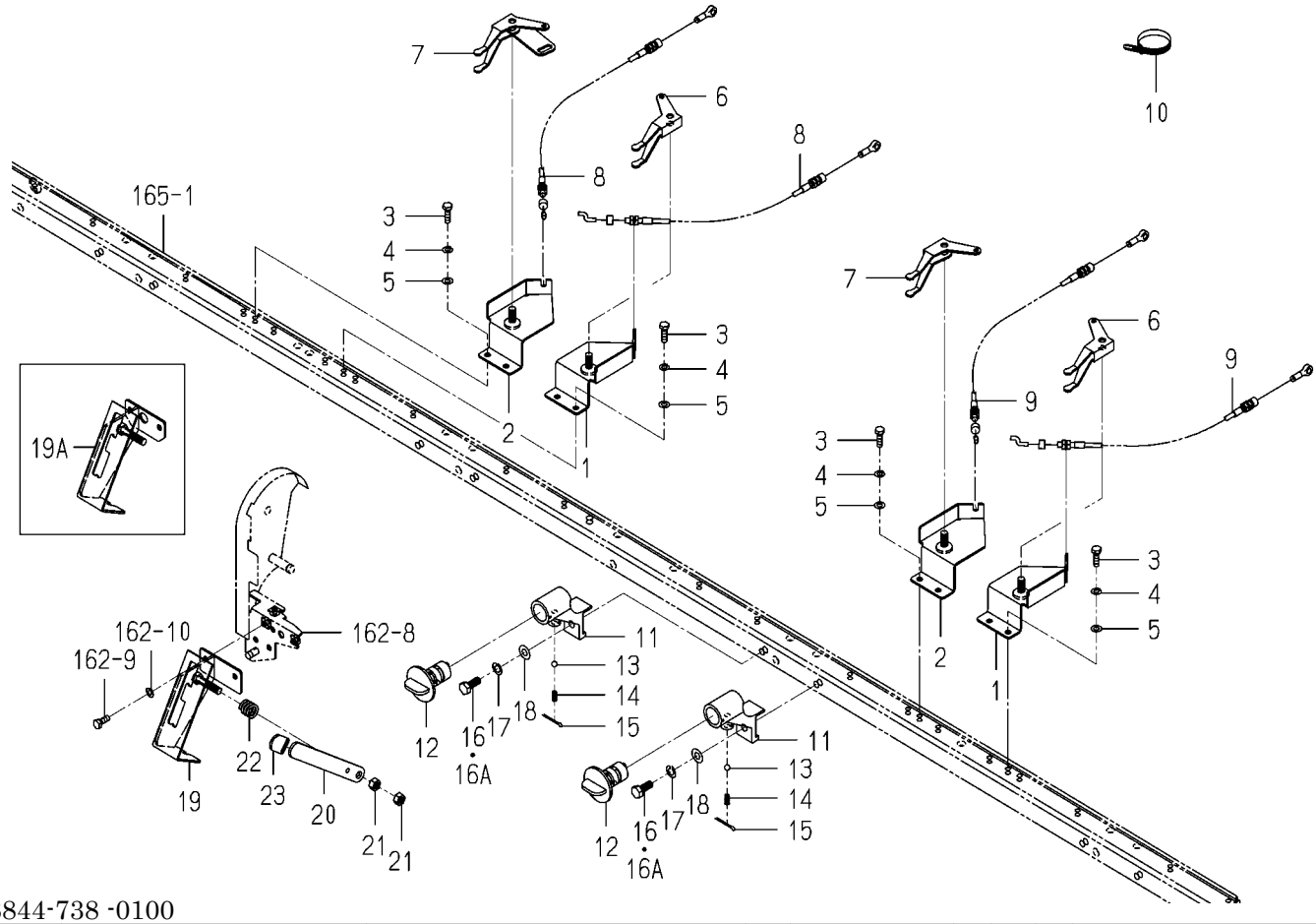

8844-738 -0100

KEY	PART CODE	DESCRIPTION	SPC	TYPE OF MODEL PZ80E16		ITC	COL	GRP	REMARKS
1	8844-765-200-00	BASE/CLUTCH/LH	*	2					
2	8844-765-210-00	BASE/CLUTCH/RH	*	2					
3	V200-700-602-00	BOLT	*	8					
4	V401-700-006-00	WASHER/LOCK	*	8					
5	V411-700-006-00	WASHER	*	8					
6	8844-765-001-00	FORK/CLUTCH/LH	*	2 100001-					
7	8844-765-002-00	FORK/CLUTCH/RH	*	2 100001-					
8	8844-765-310-10	CABLE/PZ/G	*	2					
9	8844-768-300-00	CABLE/FERTILIZE/8	*	2					
10	1376-402-003-00	BAND,WIRE/140	*	8					
11	8842-735-001-00	GUIDE,FEED-CLUTCH	*	8					
12	8842-735-240-00	CLUTCH,FEEDING	*	8					
13	2145-770-015-00	BALL,STAINLESS	*	8					
14	2145-770-016-00	SPRING/HC013	*	8					
15	8841-701-062-00	PIN,COTTER/3X25/SUS	*	8					
16	8842-405-033-00	BOLT/M8X20/SUS	*	8 -102290					
16A	8842-505-037-00	BOLT/M8X20	*	8 102291-					
17	V401-700-008-00	WASHER/LOCK	*	8					
18	V411-700-008-00	WASHER	*	8					
19	8844-765-400-20	BASE/TOTALCLUTC COMP	*	1 -101467					
19A	8844-765-400-40	BASE/TOTALCLUTC COMP	*	1 101468-		1			
20	8844-765-007-20	LEVER/TOTALCLUTCH	*	1					
21	V304-260-008-00	NUT	*	2					
22	2172-124-004-00	SPRING	*	1					
23	8841-536-018-00	CAP	*	1					

FIG.174 DITCHER SYSTEM(F TYPE)(NO.101650-)

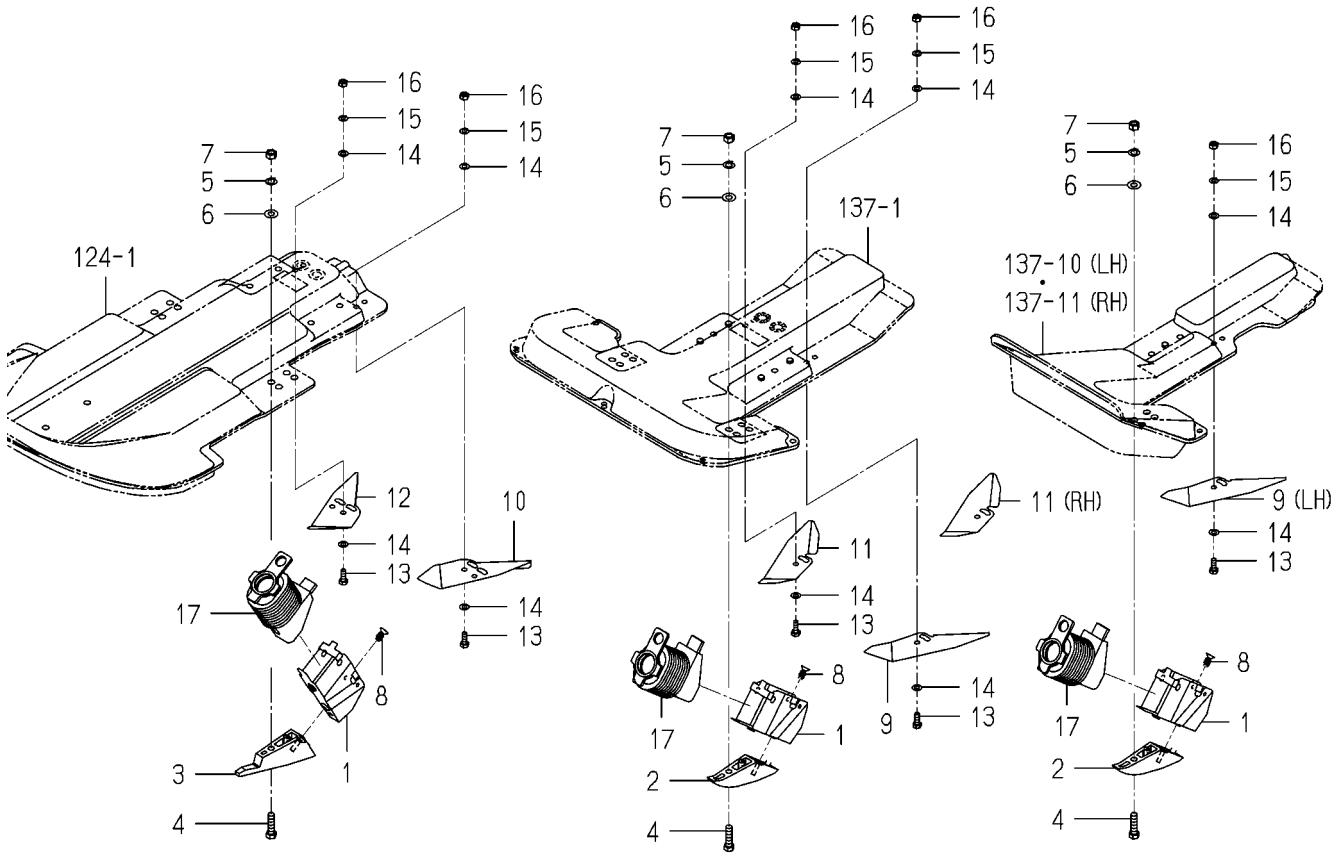

8844-748E-0100

KEY	PART CODE	DESCRIPTION	SPC	TYPE OF MODEL PZ80E16		ITC	COL	GRP	REMARKS
1	8844-745-220-40	DICTHER/PZ COMP	*	8 101650-					
2	8844-745-009-10	GUIDE/ROTER	*	6 101650-					
3	8844-745-006-10	GUIDE/PZ	*	2 101650-					
4	V200-700-803-00	BOLT	*	8 101650-					
5	V401-700-008-00	WASHER/LOCK	*	8 101650-					
6	V411-700-008-00	WASHER	*	8 101650-					
7	V304-700-008-00	NUT	*	8 101650-					
8	8844-745-013-00	SCREW/6	*	8 101650-					
9	8844-748-003-00	PLATE/SOIL COVERING/	*	3 101650-					
10	8836-602-005-10	PLATE/SOIL COVERING/	*	1 101650-					
11	8844-748-004-00	PLATE/SOIL COVERING/	*	3 101650-					
12	8836-602-006-10	PLATE/SOIL COVERING/	*	1 101650-					
13	V200-700-601-60	BOLT	*	16 101650-					
14	V411-700-006-00	WASHER	*	32 101650-					
15	V401-700-006-00	WASHER/LOCK	*	16 101650-					
16	V301-700-006-00	NUT	*	16 101650-					
17	8844-746-007-00	CAP	*	8 101650-					

FIG.175 DITCHER SYSTEM (F TYPE)(NO.100001-101649)

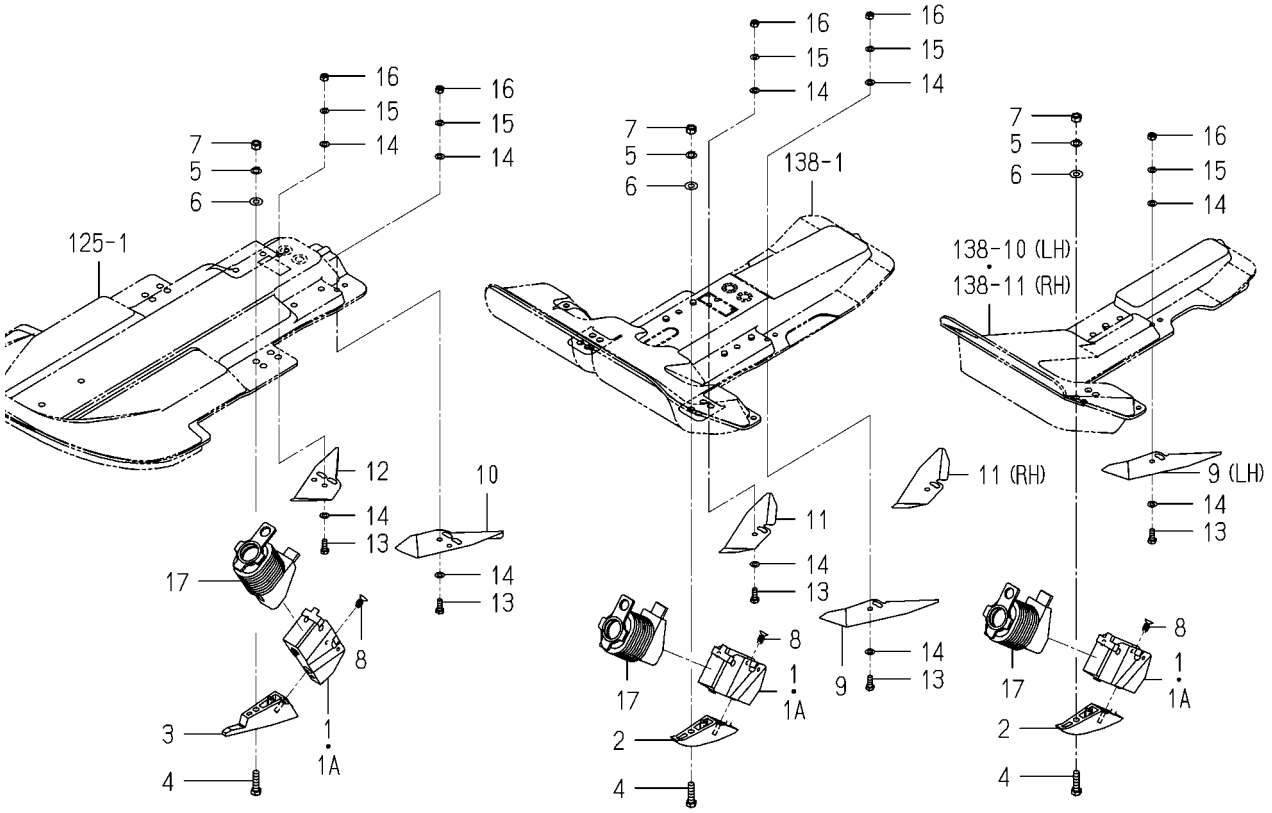

8844-748L-0100

KEY	PART CODE	DESCRIPTION	SPC	TYPE OF MODEL PZ80E16		ITC	COL	GRP	REMARKS
1	8844-745-220-20	DICTHER/PZ COMP	*	8 -101046					
1A	8844-745-220-30	DICTHER/PZ COMP	*	8 -101649		1			
2	8844-745-009-10	GUIDE/ROTER	*	6 -101649					
3	8844-745-006-10	GUIDE/PZ	*	2 -101649					
4	V200-700-803-00	BOLT	*	8 -101649					
5	V401-700-008-00	WASHER/LOCK	*	8 -101649					
6	V411-700-008-00	WASHER	*	8 -101649					
7	V304-700-008-00	NUT	*	8 -101649					
8	8844-745-013-00	SCREW/6	*	8 -101649					
9	8844-746-003-10	PLATE/SOIL COVERING/	*	3 -101649					
10	8836-602-005-10	PLATE/SOIL COVERING/	*	1 -101649					
11	8844-746-004-10	PLATE/SOIL COVERING/	*	3 -101649					
12	8836-602-006-10	PLATE/SOIL COVERING/	*	1 -101649					
13	V200-700-601-60	BOLT	*	16 -101649					
14	V411-700-006-00	WASHER	*	32 -101649					
15	V401-700-006-00	WASHER/LOCK	*	16 -101649					
16	V301-700-006-00	NUT	*	16 -101649					
17	8844-746-007-00	CAP	*	8 -101649					

FIG.176 ORNAMENT&LABEL(F TYPE)

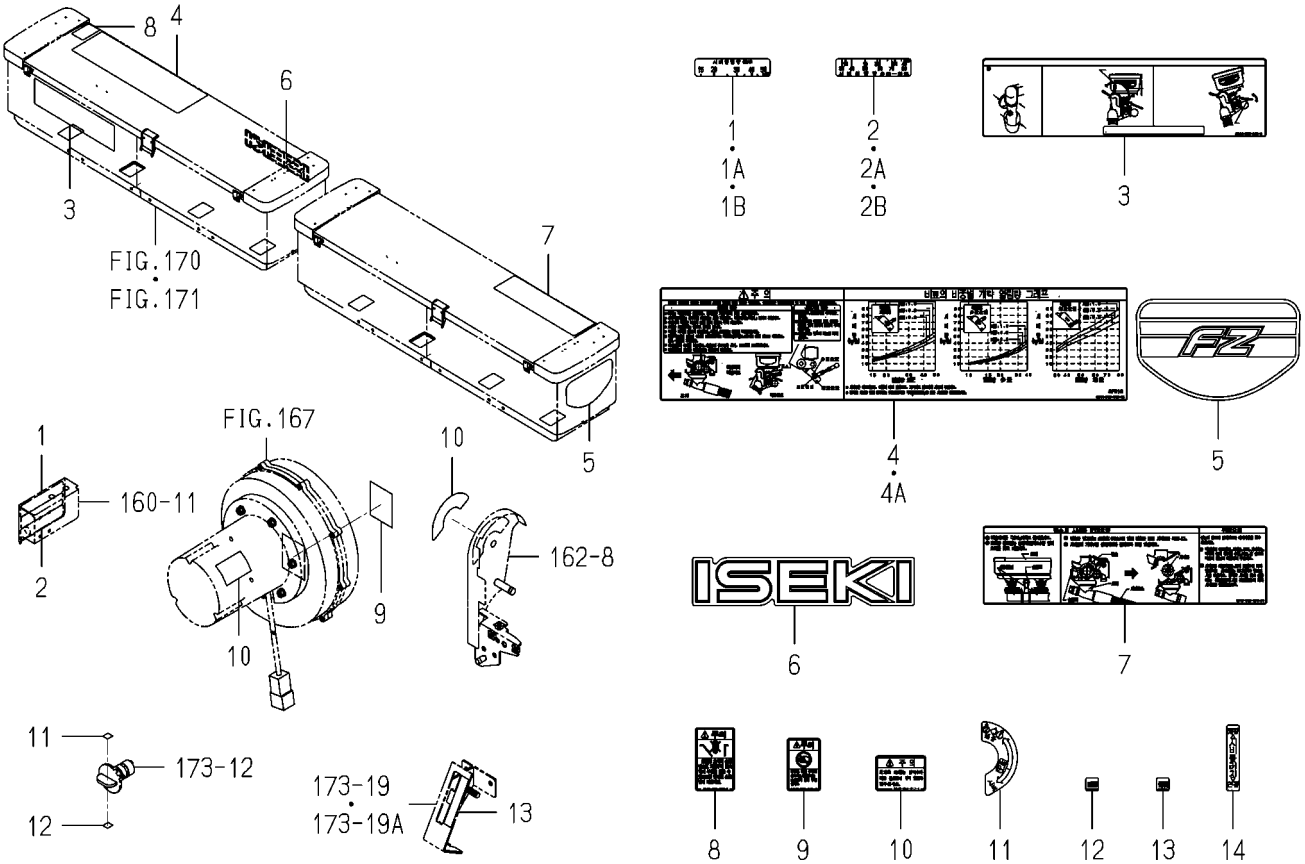

8844-908K-0100

KEY	PART CODE	DESCRIPTION	SPC	TYPE OF MODEL PZ80E16		ITC	COL	GRP	REMARKS
1	8844-908-007-00	LABEL/A MOUNT OF FER	*	1 -101046					
1A	8844-908-007-10	LABEL/A MOUNT OF FER	*	1 -101649		3			
1B	8844-908-007-20	LABEL/A MOUNT OF FER	*	1 101650-		3			
2	8844-908-008-00	LABEL/FERTILIZER/HAL	*	1 -101046					
2A	8844-908-008-10	LABEL/FERTILIZER/HAL	*	1 -101649		3			
2B	8844-908-008-20	LABEL/FERTILIZER/HAL	*	1 101650-		3			
3	8844-906-003-00	LABEL/FERTILIZER EXH	*	1					
4	8844-908-009-00	LABEL/CAUTION/FERTIL	*	1 -101046					
4A	8844-908-009-10	LABEL/CAUTION/FERTIL	*	1 101047-		3			
5	8844-905-007-00	ORNAMENT/FZ/8	*	2					
6	1689-901-008-00	ORNAMENT/ISEKI	*	1					
7	8842-905-032-00	LABEL/COUPSULE/E16	*	1					
8	8842-905-042-00	LABEL/CAUTION/HOPPER	*	1					
9	8842-905-041-00	LABEL/CAUTION/HAND	*	1					
10	8843-904-017-00	LABEL/ATTENTION/BLOW	*	1 101047-					
11	8844-906-001-00	LABEL/DISCHARGE LEVE	*	1					
12	8842-905-045-00	LABEL/ON/E16	*	8					
13	8842-905-046-00	LABEL/OFF/E16	*	8					
14	8844-906-006-00	LABEL/TOTALCLUTCH/K	*	1					

FIG.177 ACCESSORY(BRUSH)(F TYPE)

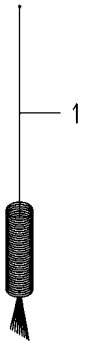

8842-915A-0100

KEY	PART CODE	DESCRIPTION	SPC	TYPE OF MODEL PZ80E16		ITC	COL	GRP	REMARKS
1	8842-919-002-10	BRUSH	*	1					

FIG.178 WHEEL(870/PG/OUT)SET(OPTION)

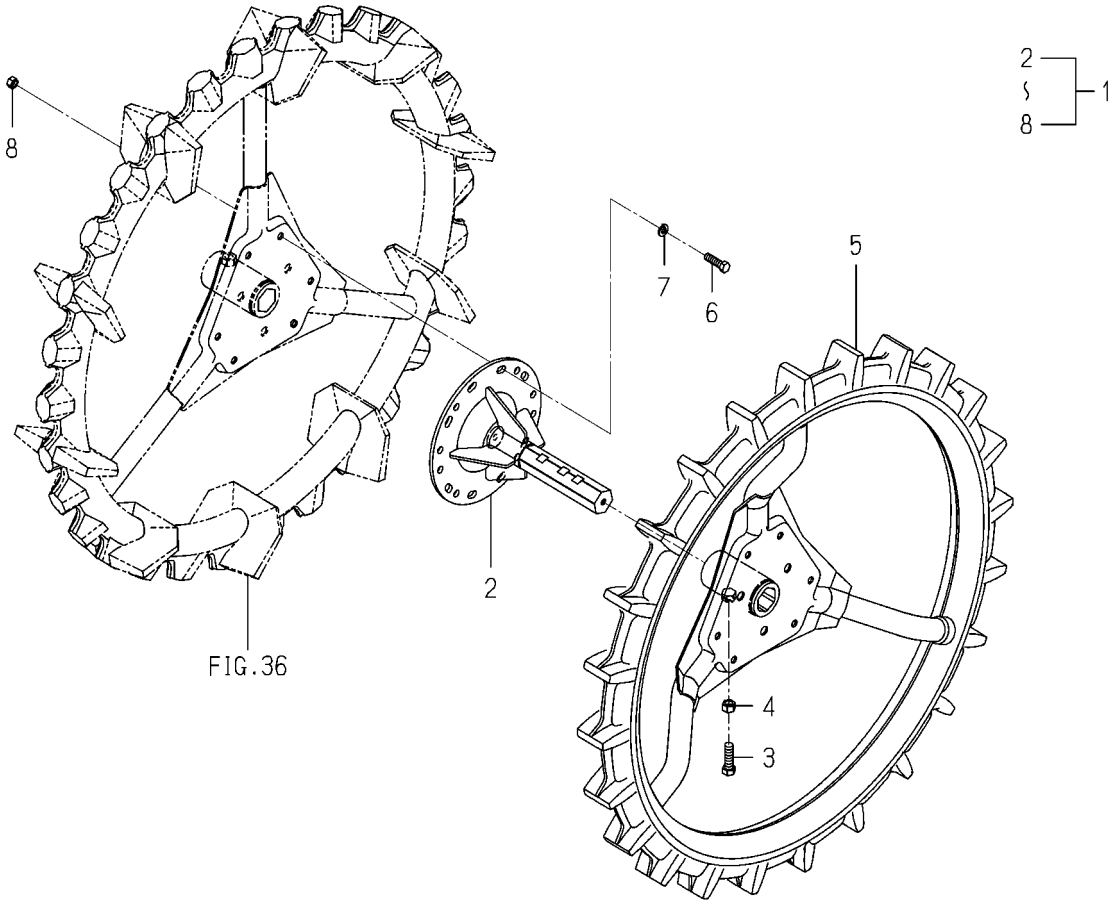

8822-001 -0100

KEY	PART CODE	DESCRIPTION	SPC	TYPE OF MODEL PZ80E16		ITC	COL	GRP	REMARKS
1	8822-001-200-10	WHEEL/852/PG/OUT	T	1					
2	8822-037-300-20	EXTENSION 870/PG	T	2					
3	V201-361-204-00	BOLT/M12X40	T	2					
4	V304-260-012-00	NUT/M12	T	2					
5	8822-037-500-10	WHEEL/REAR/SUB/870/P	T	2		1			
6	V201-261-003-50	BOLT/M10X35	T	12					
7	V401-160-010-00	WASHER,SP/M10	T	12					
8	V304-260-010-00	NUT	T	12					

FIG.179 GREASE(OPTION)

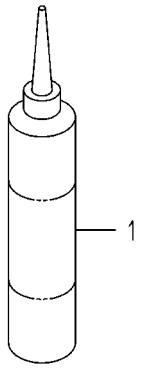

8849-001A-0100

KEY	PART CODE	DESCRIPTION	SPC	TYPE OF MODEL		ITC	COL	GRP	REMARKS
				PZ80E16					
1	8849-001-300-00	GREASE	T	1					

FIG.180 WHEEL(850/PG/OUT)SET(G TYPE)(OPTION)

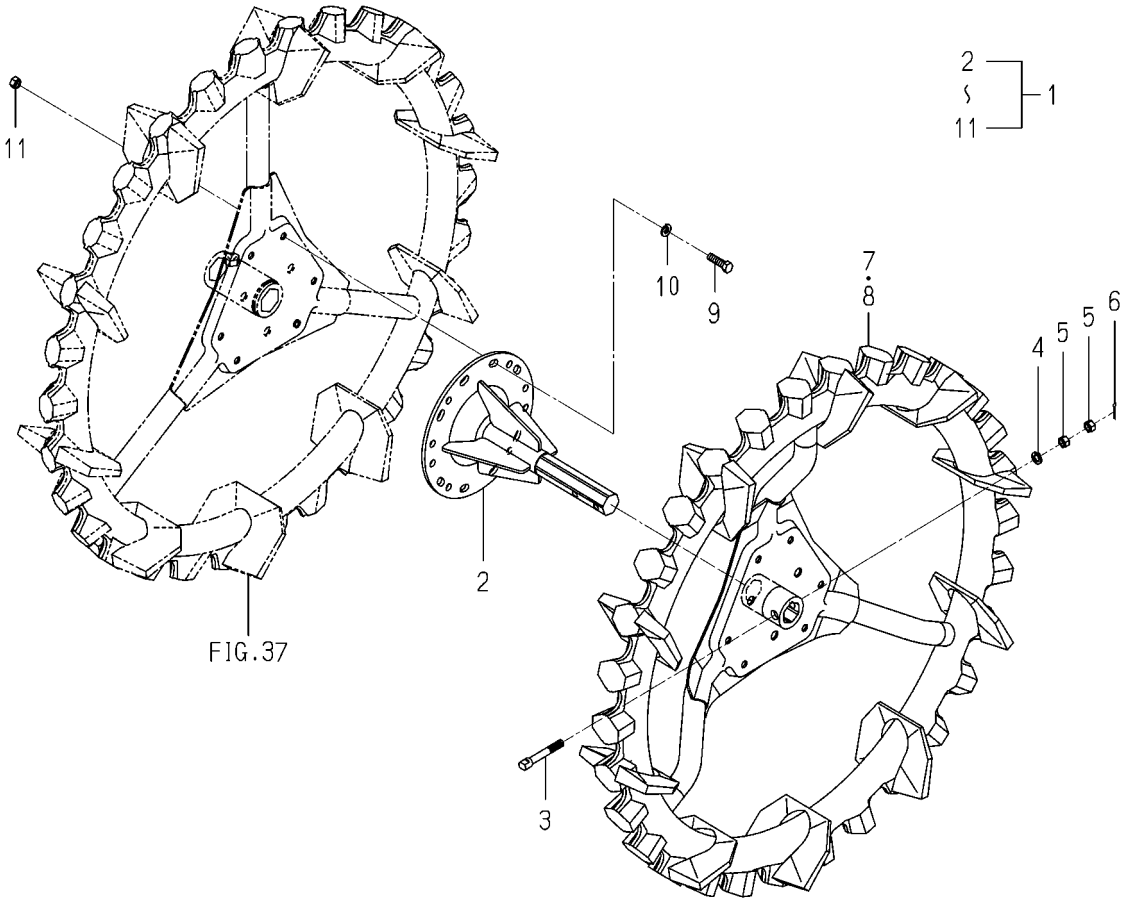

8822-002 -0100

KEY	PART CODE	DESCRIPTION	SPC	TYPE OF MODEL PZ80E16		ITC	COL	GRP	REMARKS
1	8822-002-200-10	WHEEL/850/PG/OUT	T	1					
2	8822-037-210-20	EXTENSION 850/PG	T	2					
3	2146-222-004-20	BOLT SET/M10X68	T	2					
4	V401-160-010-00	WASHER,SP/M10	T	2					
5	V304-260-010-00	NUT	T	4					
6	V500-163-002-00	PIN,SPLIT/3 X20	T	2					
7	2161-226-220-30	WHEEL/REAR/850/LH	T	1		1			
8	2161-226-230-30	WHEEL/REAR/850/RH	T	1		1			
9	V201-261-003-50	BOLT/M10X35	T	12					
10	V401-160-010-00	WASHER,SP/M10	T	12					
11	V304-260-010-00	NUT	T	12					

FIG.181 WHEEL(870/PG/IN)SET(OPTION)

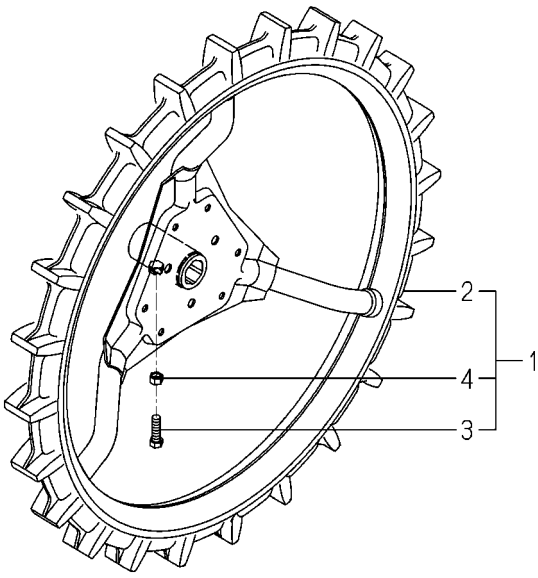

8822-004 -0100

KEY	PART CODE	DESCRIPTION	SPC	TYPE OF MODEL PZ80E16		ITC	COL	GRP	REMARKS
1	8822-004-200-00	WHEEL/870/PG/IN	T	1					
2	8822-037-500-10	WHEEL/REAR/SUB/870/P	T	2		1			
3	V201-361-204-00	BOLT/M12X40	T	2					
4	V304-260-012-00	NUT/M12	T	2					

FIG.182 WHEEL(900/OUT)SET(D TYPE)(OPTION)

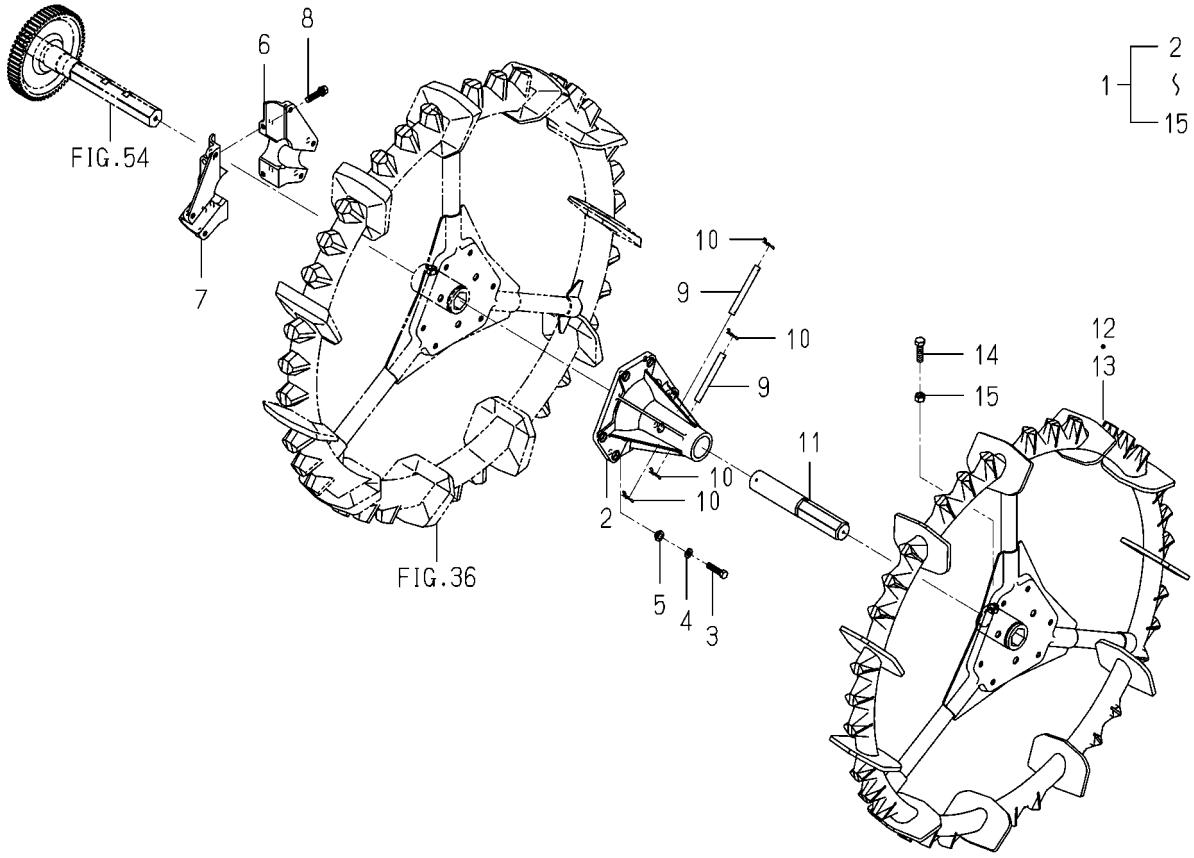

8822-030 -0100

KEY	PART CODE	DESCRIPTION	SPC	TYPE OF MODEL PZ80E16		ITC	COL	GRP	REMARKS
1	8822-030-400-00	WHEEL/900/OUT SET	T	1					
2	2172-333-012-10	BOSS/EXTENSION	T	2					
3	V201-361-004-00	BOLT/M10X40	T	12					
4	V401-160-010-00	WASHER,SP/M10	T	12					
5	2172-333-018-00	COLOR/11X20X08	T	12					
6	8822-030-002-00	METAL/U	T	2					
7	8822-030-003-00	METAL/EXTENSION/RH	T	2					
8	V211-261-004-50	BOLT (S)/M10X45	T	4					
9	2172-333-011-00	PIN/12X105	T	4					
10	2161-222-003-00	PIN,SNAP	T	8					
11	8822-030-001-00	SHAFT/ASSISTANCE/PZ	T	2					
12	2204-222-700-40	WHEEL/900/LH/7 COMP	T	1		1			
13	2204-222-710-40	WHEEL/900/RH/7 COMP	T	1		1			
14	V201-361-204-00	BOLT/M12X40	T	2					
15	V304-260-012-00	NUT/M12	T	2					

FIG.183 GEAR(SLIDE/28/8)SET(OPTION)

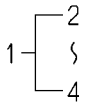

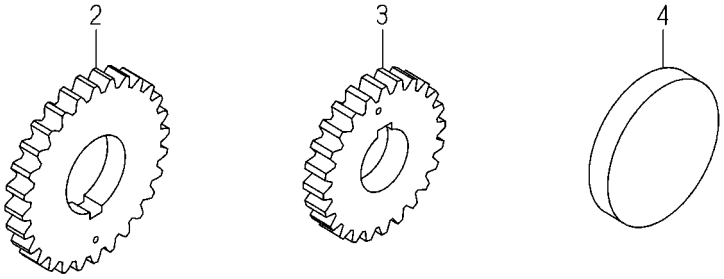

2213-607X-0100

KEY	PART CODE	DESCRIPTION	SPC	TYPE OF MODEL PZ80E16		ITC	COL	GRP	REMARKS
1	2213-607-910-00	GEAR 28-8	T	1					
2	2213-607-051-00	GEAR/SPUR/28/28TIMES	T	1					
3	2213-607-052-00	GEAR/SPUR/24/28TI	T	1					
4	2194-701-010-00	PLUG/47	T	1					

FIG.184 RAKE(FLOAT)SET(OPTION)

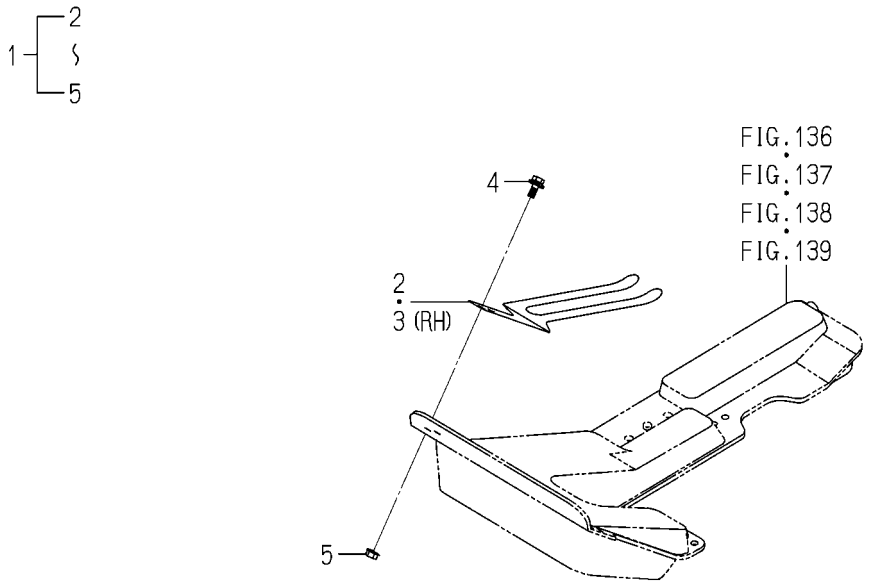

2213-710X-0100

KEY	PART CODE	DESCRIPTION	SPC	TYPE OF MODEL		ITC	COL	GRP	REMARKS
				PZ80E16					
1	2213-710-800-00	RAKE/F	T	1					
2	2204-710-021-00	RAKE/CENTER/LH	T	1					
3	2204-710-022-00	RAKE/CENTER/RH	T	1					
4	2144-501-011-10	BOLT/M6X16X16	T	4					
5	V360-260-006-00	NUT/M6	T	4					

FIG.185 FORK CLEANER(OPTION)

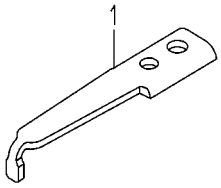

2186-738W-0100

KEY	PART CODE	DESCRIPTION	SPC	TYPE OF MODEL PZ80E16		ITC	COL	GRP	REMARKS
1	2186-738-055-00	CLEANER,FORK	T	1					

FIG.186 SEPARATION NEEDLE(OPTION)

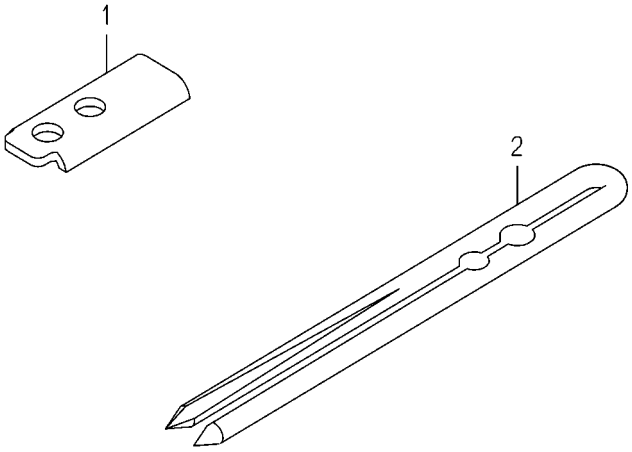

2186-738X-0100

KEY	PART CODE	DESCRIPTION	SPC	TYPE OF MODEL PZ80E16		ITC	COL	GRP	REMARKS
1	2186-738-051-00	SET PLATE/NEEDLE	T	1					
2	2186-738-052-10	NEEDLE,SEPARATION/PG	T	1					

FIG.187 WIDE SEPARATION NEEDLE(OPTION)

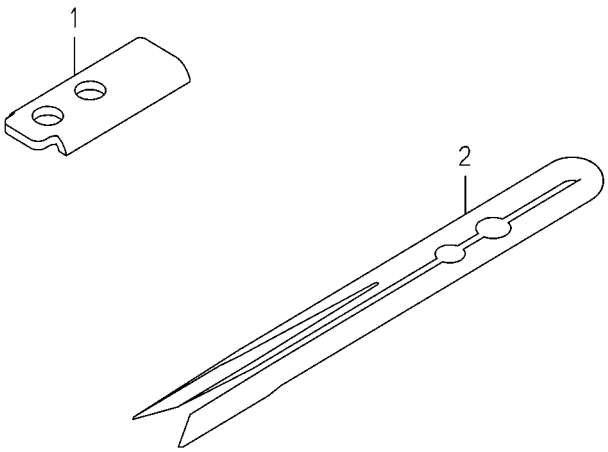

2186-738Y-0100

KEY	PART CODE	DESCRIPTION	SPC	TYPE OF MODEL PZ80E16		ITC	COL	GRP	REMARKS
1	2186-738-051-00	SET PLATE/NEEDLE	T	1					
2	2186-738-053-10	NEEDLE,WIDE/PG	T	1					

FIG.188 FORK(OPTION)

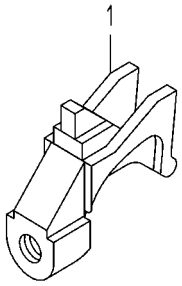

2213-740 -0100

KEY	PART CODE	DESCRIPTION	SPC	TYPE OF MODEL PZ80E16		ITC	COL	GRP	REMARKS
1	2204-740-001-00	FORK/OPT	T	16					

FIG.189 COMPONENT PARTS FOR K116-029-000-50 ON Fig.128

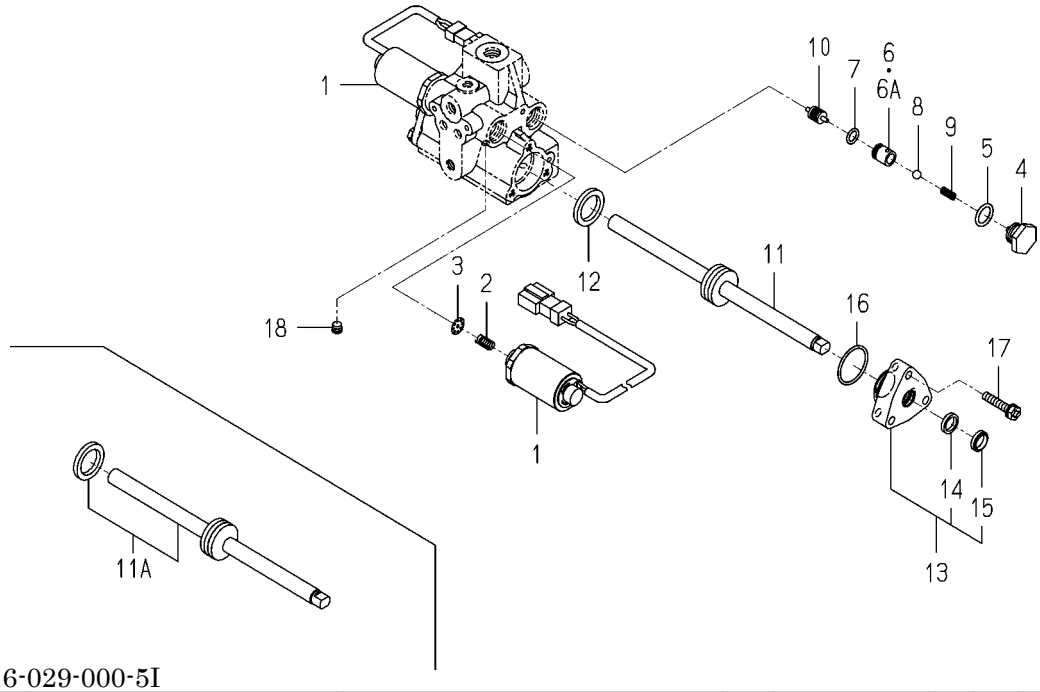

K116-029-000-5I

KEY	PART CODE	DESCRIPTION	SPC	TYPE OF MODEL PZ80E16		ITC	COL	GRP	REMARKS
1	K116-024-200-00	SOLENOID SET	*	2					
2	K116-024-003-00	SPRING	*	2					
3	K116-024-004-00	COLLAR	*	2					
4	K116-024-005-00	PLUG	*	2					
5	V720-112-401-40	O-RING/P14	*	2					
6	K116-024-006-10	COLLAR	*	2 -101649					
6A	K116-024-006-20	COLLAR/CHECK	*	2 101650-		1			
7	V720-111-900-90	O-RING/P 9	*	2					
8	V682-200-000-80	BALL	*	2					
9	K116-024-007-00	SPRING	*	2					
10	K116-024-008-10	SPOOL	*	1					
11	K116-032-100-00	ROD,PISTON	*	1 -101649					
11A	K116-029-400-00	ROD/PISTON/029 SET	*	1 101650-					
12	K116-029-003-00	PACKING	*	1 -101649					
13	K116-029-300-00	COVER,ROD	*	2					
14	V724-122-901-20	PACKING,ROD	*	2					
15	V793-112-160-40	SEAL,DUST	*	2					
16	V723-112-002-90	RING/O	*	2					
17	V210-560-603-00	BOLT/S	*	6					
18	V780-140-000-1T	PLUG/SCREW/SEAL	*	7					

FIG.190 COMPONENT PARTS FOR K200-181-000-40 ON Fig.75

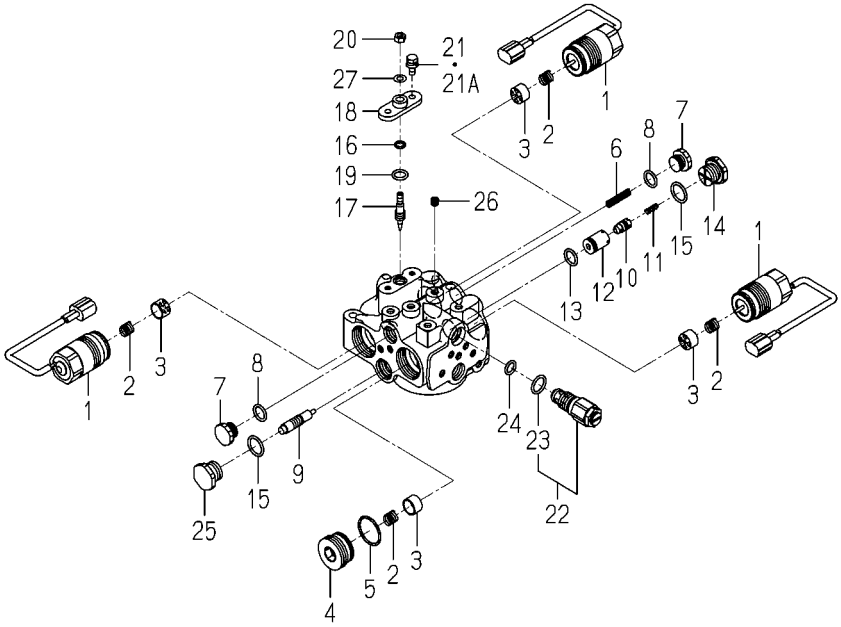

K200-181-000-4K

KEY	PART CODE	DESCRIPTION	SPC	TYPE OF MODEL PZ80E16		ITC	COL	GRP	REMARKS
1	K200-042-300-00	SOLENOID/090/BL	*	3					
2	K270-001-003-10	SPRING/HC012	*	4					
3	K270-001-004-10	BASE/SPRING	*	4					
4	K270-001-005-00	PLUG/M35	*	1					
5	V723-112-002-90	RING/O	*	1					
6	K233-001-004-00	SPRING/HC036	*	1					
7	K200-131-012-00	PLUG/M16	*	2					
8	V720-112-401-40	O-RING/P14	*	2					
9	K200-131-006-00	SPOOL/PILOT	*	1					
10	K200-103-003-20	POPPET	*	1					
11	K200-103-005-00	SPRING/HC016	*	1					
12	K200-103-004-10	SLEEVE	*	1					
13	V723-111-501-40	O-RING	*	1					
14	K200-131-013-20	PLUG/M20	*	1					
15	V720-112-401-80	O-RING/P18	*	2					
16	V720-111-900-80	O-RING/P8	*	1					
17	K211-035-012-00	NEEDLE	*	1					
18	K200-042-003-00	COVER/NEEDLE	*	1					
19	V723-111-501-20	O-RING	*	1					
20	V301-260-006-00	NUT/M6	*	1					
21	2144-815-002-00	BOLT/M6X16	*	2 -102349					
21A	V210-360-601-60	BOLT(SP)/M6X16	*	2 102350-					
22	K200-124-130-00	VALVE,RELIEF	*	1					
23	V720-112-401-60	O-RING/P16	*	1					
24	V720-112-401-10	RING/O	*	1					
25	K200-131-014-00	PLUG/M20	*	1					
26	V780-140-000-1T	PLUG/SCREW/SEAL	*	22					
27	V411-260-006-00	WASHER / M6	*	1 102350-					

FIG.191 COMPONENT PARTS FOR K510-013-000-40 ON Fig.16¤17

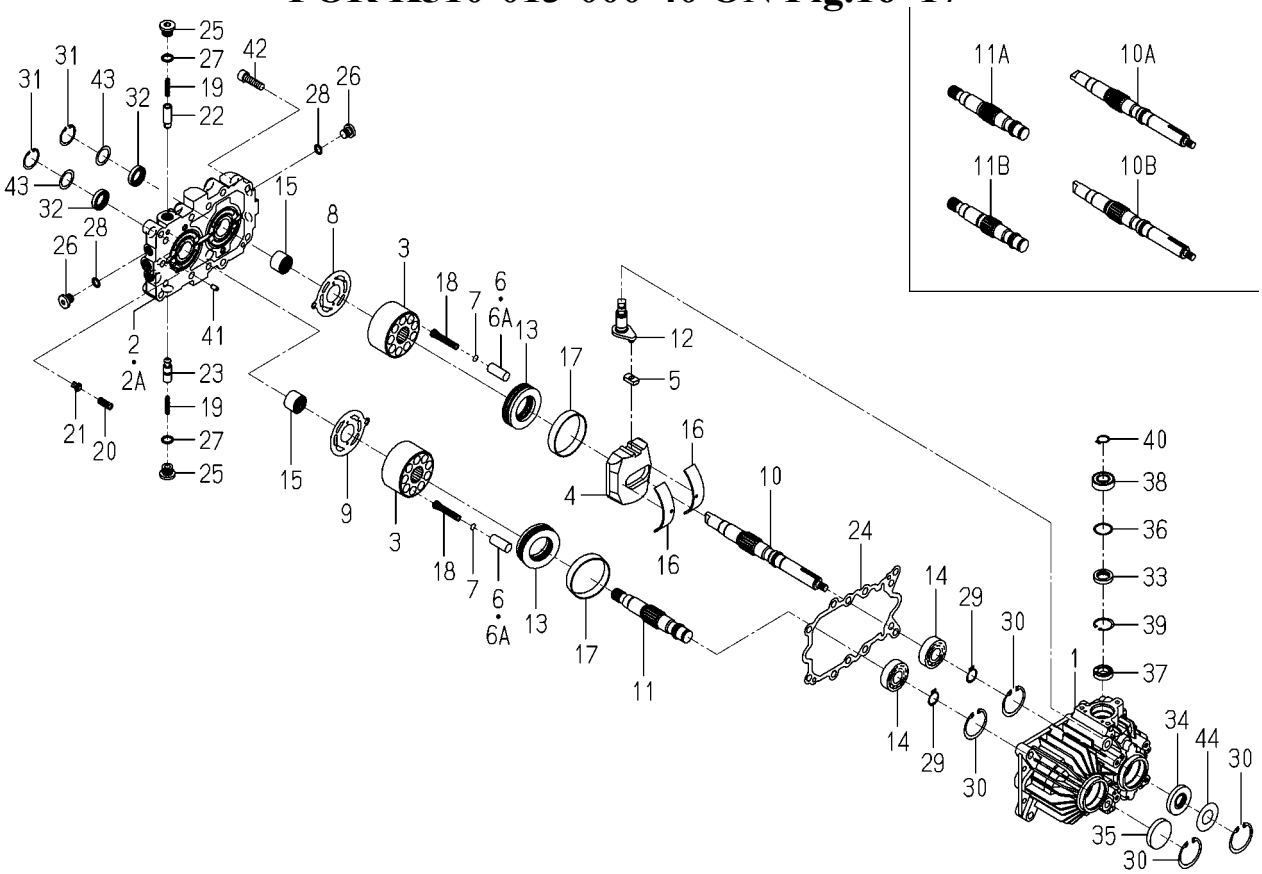

K510-013-000-4N

KEY	PART CODE	DESCRIPTION	SPC	TYPE OF MODEL PZ80E16		ITC	COL	GRP	REMARKS
1	K510-002-001-10	CASE	*	1 -102349					
2	K510-006-004-00	BLOCK/PORT	*	1 -102260					
2A	K510-006-004-10	BLOCK/PORT	*	1 -102349		1			
3	K510-005-005-00	BLOCK/CYLINDER	*	2 -102349					
4	K510-001-006-10	PLATE/SWASH	*	1 -102349					
5	K510-001-007-00	METAL/SLIDE	*	1 -102349					
6	K510-001-008-00	PISTON	*	18 -101649					
6A	K510-006-008-00	PISTON	*	18 -102349					
7	K510-001-009-00	SHIM/0.9	*	18 -102349					
8	K510-001-010-00	PLATE/VALVE/PUMP	*	1 -102349					
9	K510-001-011-00	PLATE/VALVE/MOTOR	*	1 -102349					
10	K510-006-012-10	SHAFT/PUMP	*	1 -101744					
10A	K510-006-012-20	SHAFT/PUMP	*	1 -102260		2			
10B	K510-006-012-30	SHAFT/PUMP	*	1 -102349		1			
11	K510-001-013-00	SHAFT/MOTOR	*	1 -101744					
11A	K510-001-013-10	SHAFT/MOTOR	*	1 -102260		2			
11B	K510-001-013-20	SHAFT/MOTOR	*	1 -102349		1			
12	K510-002-014-00	ARM/	*	1 -102349					
13	K510-001-015-00	BEARING/THRUST	*	2 -102349					
14	V600-110-620-40	BEARING,RB/6204	*	2 -102349					
15	K510-001-016-00	NEEDLE	*	2 -102349					
16	K510-001-017-00	BUSH/95X100X22	*	2 -102349					
17	K510-001-018-00	BUSH/68X71X14	*	2 -102349					
18	K510-001-019-00	SPRING/HC053	*	18 -102349					
19	K510-001-020-00	SPRING/HC030	*	2 -102349					
20	K510-001-021-10	SPRING/HC024	*	1 -102349					
21	K510-001-022-00	POPPET/RELIEF	*	1 -102349					
22	K510-006-023-00	POPPET/CHECK	*	1 -102349					
23	K510-005-024-00	POPPET/CHECK/1.3	*	1 -102349					
24	K510-001-026-00	GASKET	*	1 -102349					

FIG.191 COMPONENT PARTS FOR K510-013-000-40 ON Fig.16¤17

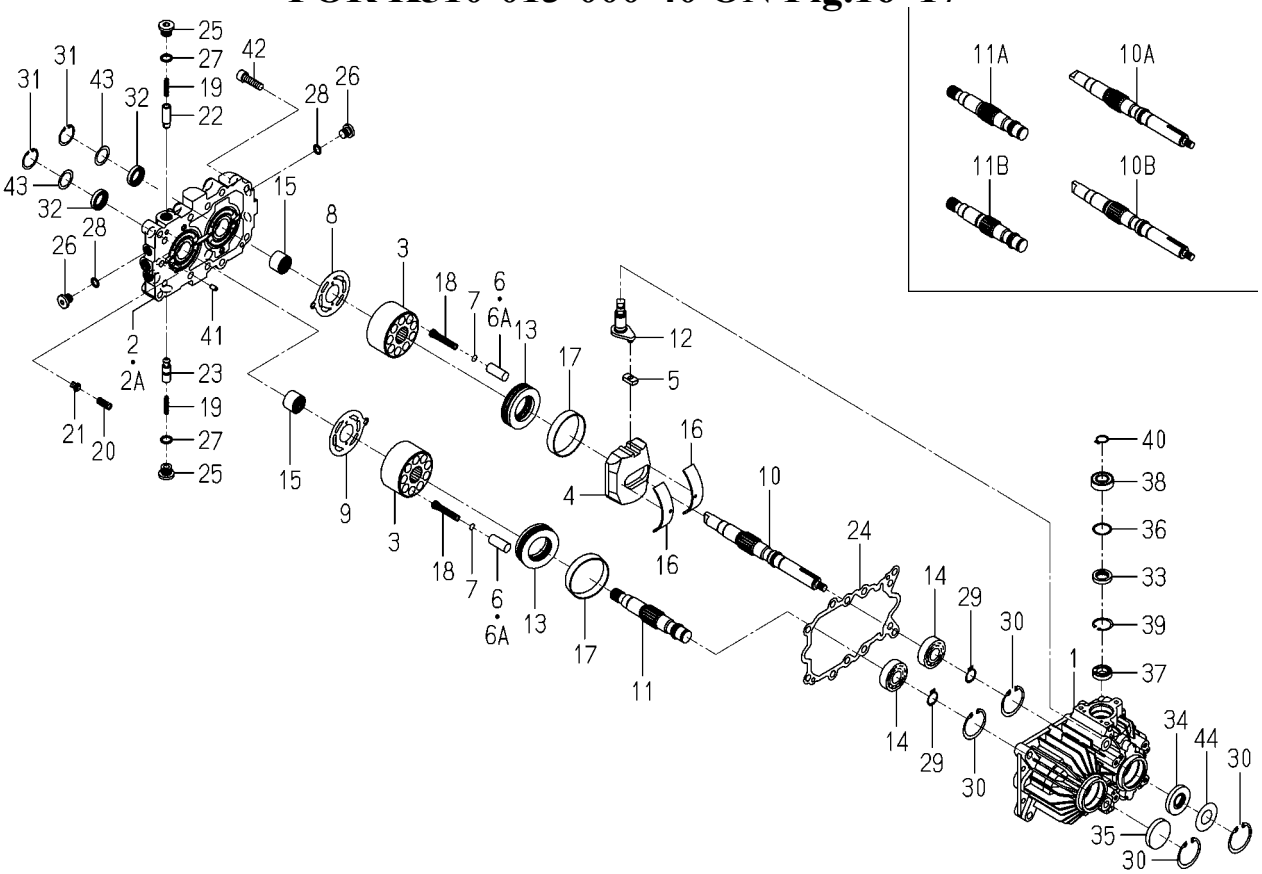

K510-013-000-4N

KEY	PART CODE	DESCRIPTION	SPC	TYPE OF MODEL PZ80E16		ITC	COL	GRP	REMARKS
25	K510-001-029-00	PLUG(G3/8)	*	2 -102349					
26	K275-001-003-00	PLUG(PF1/4)	*	4 -102349					
27	V720-112-401-40	O-RING/P14	*	2 -102349					
28	V720-112-401-10	RING/O	*	4 -102349					
29	V704-140-020-00	RING,SNAP/20C	*	2 -102349					
30	V705-140-047-00	RING,SNAP/47 C	*	4 -102349					
31	V705-140-032-00	RING,SNAP/32 C	*	2 -102349					
32	K510-001-039-00	OILSEAL	*	2 -102349					
33	K510-001-031-00	SEAL/OIL	*	1 -102349					
34	V744-120-470-70	SEAL/OIL	*	1 -102349					
35	1421-201-002-00	SEAL/47	*	1 -102349					
36	K510-001-034-00	WASHER/25X30X1	*	1 -102349					
37	V600-110-690-30	BEARING	*	1 -102349					
38	V600-150-600-30	BEARING,RB/6003SS	*	1 -102349					
39	V705-140-030-00	RING,SNAP/30 C	*	1 -102349					
40	V704-140-017-00	RING,SNAP/17 C	*	1 -102349					
41	K510-001-036-00	PIN,ST	*	4 -102349					
42	V220-541-003-50	SCREW/SOCKET	*	8 -102349					
43	K510-006-037-00	WASHER/23X32X1.2	*	2 -102349					
44	K510-006-038-00	WASHER/23X47X1.6	*	1 -102349					

FIG.192 COMPONENT PARTS FOR K510-019-000-20 ON Fig.14¤15

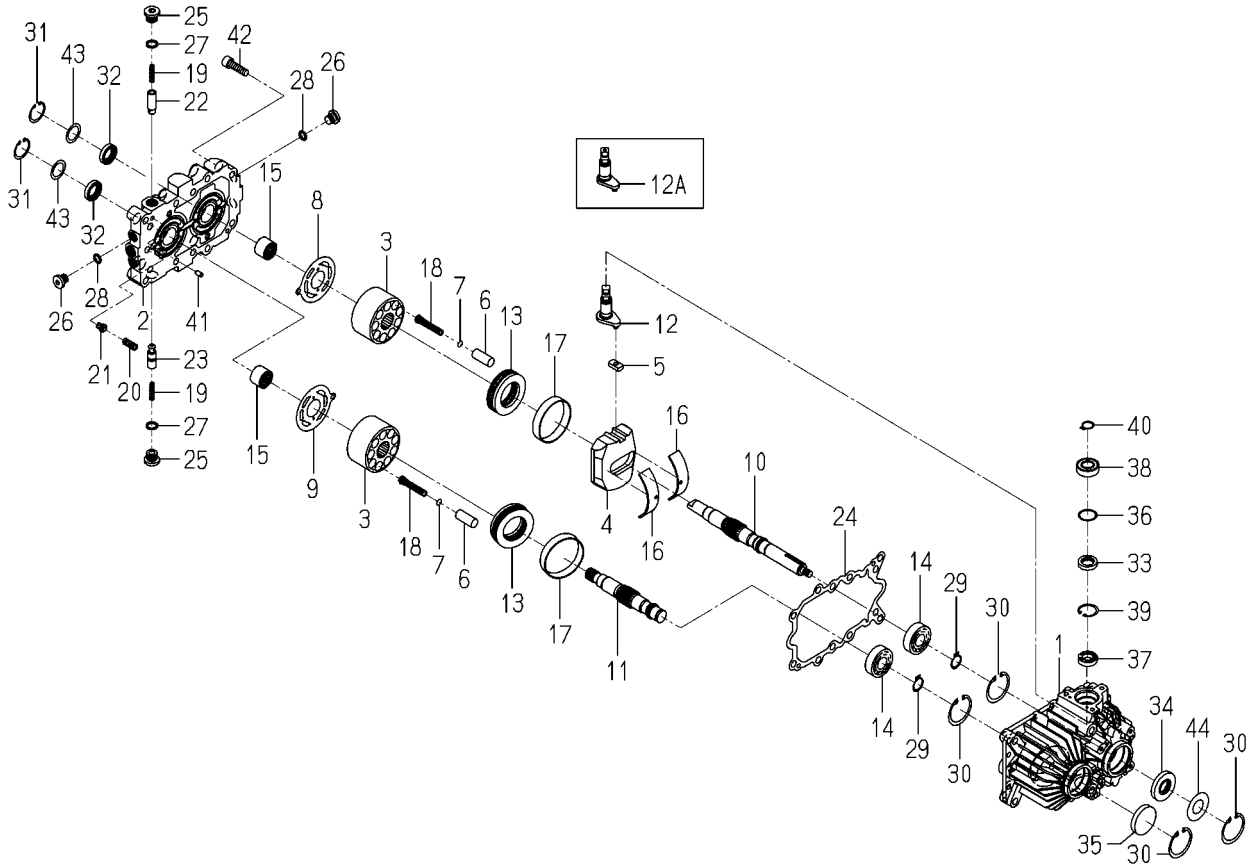

K510-019-000-2C

KEY	PART CODE	DESCRIPTION	SPC	TYPE OF MODEL PZ80E16		ITC	COL	GRP	REMARKS
1	K510-019-001-00	CASE/HMS1/019	*	1 102350-					
2	K510-006-004-10	BLOCK/PORT	*	1 102350-					
3	K510-019-005-00	BLOCK/CYLINDER	*	2 102350-					
4	K510-010-006-10	PLATE/SWASH	*	1 102350-					
5	K510-001-007-00	METAL/SLIDE	*	1 102350-					
6	K510-006-008-00	PISTON	*	18 102350-					
7	K510-010-009-00	SHIM/1.8	*	18 102350-					
8	K510-001-010-00	PLATE/VALVE/PUMP	*	1 102350-					
9	K510-001-011-00	PLATE/VALVE/MOTOR	*	1 102350-					
10	K510-006-012-30	SHAFT/PUMP	*	1 102350-					
11	K510-001-013-20	SHAFT/MOTOR	*	1 102350-					
12	K510-002-014-00	ARM/	*	1 -120400					
12A	K510-006-014-00	ARM/TRUNNION/HMS1/00	*	1 120401-					
13	K510-001-015-00	BEARING/THRUST	*	2 102350-					
14	V600-110-620-40	BEARING,RB/6204	*	2 102350-					
15	K510-001-016-00	NEEDLE	*	2 102350-					
16	K510-001-017-00	BUSH/95X100X22	*	2 102350-					
17	K510-001-018-00	BUSH/68X71X14	*	2 102350-					
18	K510-001-019-00	SPRING/HC053	*	18 102350-					
19	K510-001-020-00	SPRING/HC030	*	2 102350-					
20	K510-001-021-10	SPRING/HC024	*	1 102350-					
21	K510-001-022-00	POPPET/RELIEF	*	1 102350-					
22	K510-006-023-00	POPPET/CHECK	*	1 102350-					
23	K510-005-024-00	POPPET/CHECK/1.3	*	1 102350-					
24	K510-001-026-00	GASKET	*	1 102350-					
25	K510-001-029-00	PLUG(G3/8)	*	2 102350-					
26	K275-001-003-00	PLUG(PF1/4)	*	4 102350-					
27	V720-112-401-40	O-RING/P14	*	2 102350-					
28	V720-112-401-10	RING/O	*	4 102350-					
29	V704-140-020-00	RING,SNAP/20C	*	2 102350-					

FIG.192 COMPONENT PARTS FOR K510-019-000-20 ON Fig.14¤15

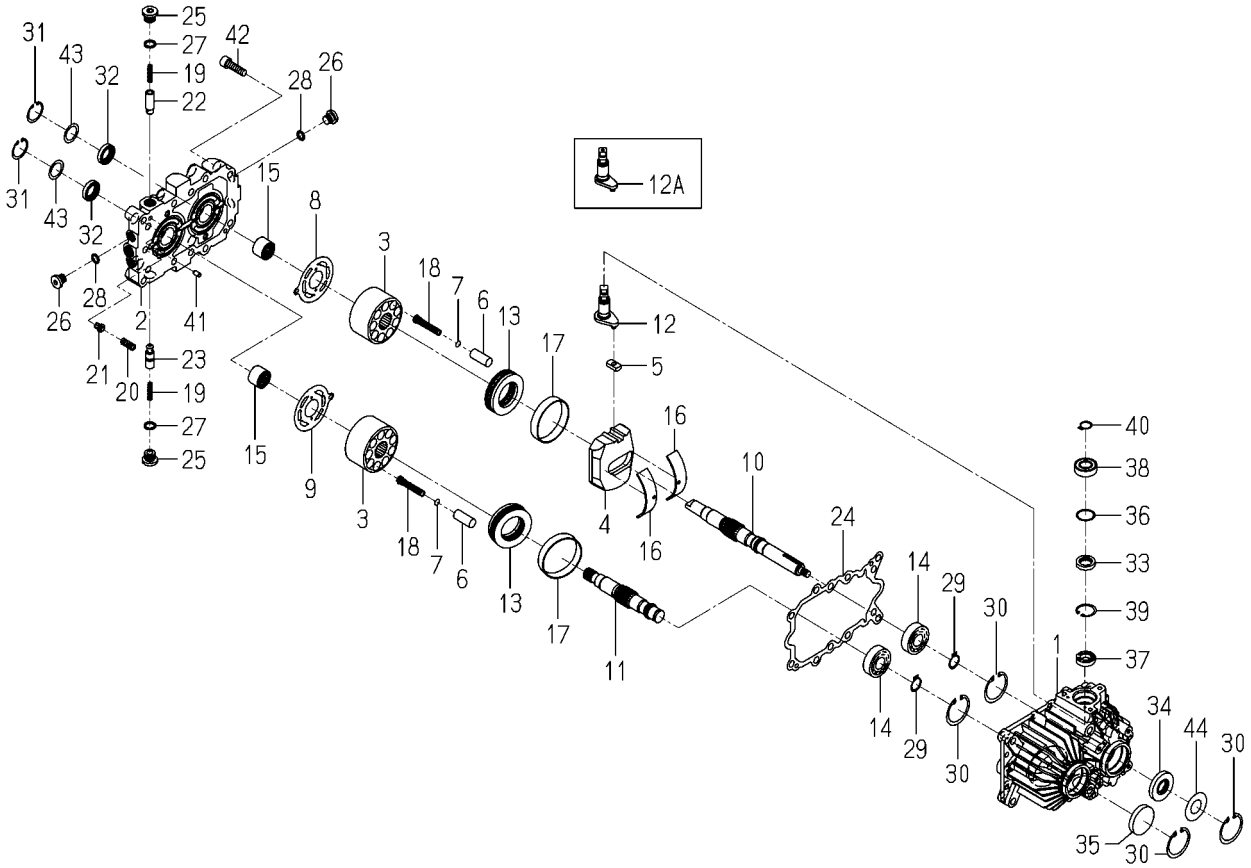

K510-019-000-2C

KEY	PART CODE	DESCRIPTION	SPC	TYPE OF MODEL PZ80E16		ITC	COL	GRP	REMARKS
30	V705-140-047-00	RING,SNAP/47 C	*	4 102350-					
31	V705-140-032-00	RING,SNAP/32 C	*	2 102350-					
32	K510-001-039-00	OILSEAL	*	2 102350-					
33	K510-001-031-00	SEAL/OIL	*	1 102350-					
34	V744-120-470-70	SEAL/OIL	*	1 102350-					
35	1421-201-002-00	SEAL/47	*	1 102350-					
36	K510-001-034-00	WASHER/25X30X1	*	1 102350-					
37	V600-110-690-30	BEARING	*	1 102350-					
38	V600-150-600-30	BEARING,RB/6003SS	*	1 102350-					
39	V705-140-030-00	RING,SNAP/30 C	*	1 102350-					
40	V704-140-017-00	RING,SNAP/17 C	*	1 102350-					
41	K510-001-036-00	PIN,ST	*	4 102350-					
42	V220-541-003-50	SCREW/SOCKET	*	8 102350-					
43	K510-006-037-00	WASHER/23X32X1.2	*	2 102350-					
44	K510-006-038-00	WASHER/23X47X1.6	*	1 102350-					

FIG.193 COMPONENT PARTS(1/2) FOR 2204-738-400-90 ON Fig.143

22~24-PLEASE SEE 2/2 PAGE

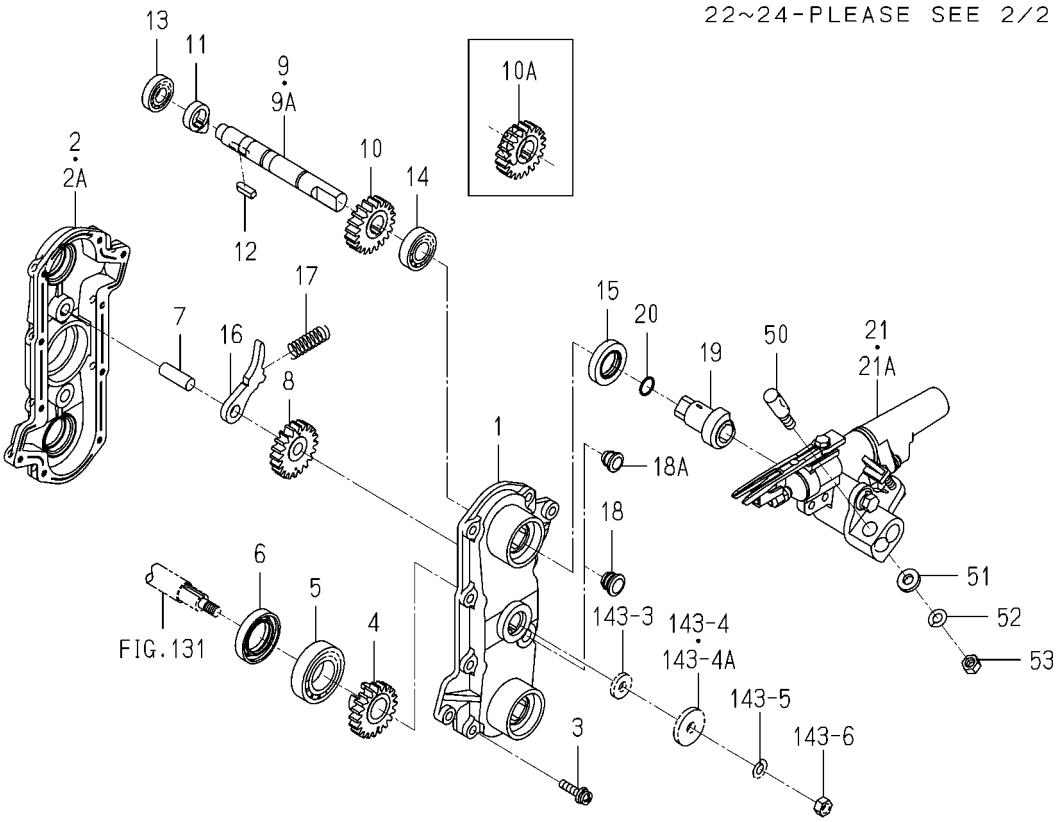

2204-738-400-9L

KEY	PART CODE	DESCRIPTION	SPC	TYPE OF MODEL PZ80E16		ITC	COL	GRP	REMARKS
1	2204-738-340-00	CASE/ROTERY/OUT/LH	*	4 -102349					
2	2204-738-282-00	CASE/ROTERY/INNER/LH	*	4 -101649					
2A	2204-738-282-10	CASE/ROTARY/IN/LH	*	4 -102349		1			
3	V120-366-002-50	SOREN/SP/M6X25	*	40 -102349					
4	2204-738-273-00	GEAR,SUN/LH	*	4 -102349					
5	V600-110-600-50	BEARING,RB/6005	*	4 -102349					
6	2142-736-224-00	SEAL,OIL	*	4 -102349					
7	2142-736-214-00	PIN,COUNTER,GEAR	*	8 -102349					
8	2204-738-274-00	GEAR,COUNTER	*	8 -102349					
9	2204-738-275-10	SHAFT/PLANTING ARM/L	*	8 -102175					
9A	2204-738-275-20	SHAFT/PLANTING ARM/L	*	8 -102349		1			
10	2204-738-276-00	GEAR	*	8 -101649					
10A	2204-738-277-00	GEAR/LH	*	8 -102349					
11	2144-736-221-00	CAM	*	8 -101649					
12	2142-736-271-00	KEY,05X05X18 PLUS	*	8 -102349					
13	V600-110-600-10	BEARING,RB/6001	*	8 -102349					
14	V600-110-600-20	BEARING,RB/6002	*	8 -102349					
15	2144-738-216-00	SEAL,OIL	*	8 -102349					
16	2161-738-611-00	ARM LH	*	8 -102349					
17	2142-736-221-00	SPRING/HC037	*	8 -102349					
18	2142-736-236-00	PLUG	*	4 -101649					
18A	2186-738-038-20	CAP/10	*	4 -102349					
19	2204-738-307-00	CAM/PUSHED OUT/LH	*	8 -102349					
20	2161-738-008-00	O-RING/OR	*	16 -102349					
21	2204-738-410-20	PLANTINGARM/K/L ASSY	*	8 -102175					
21A	2204-738-410-50	PLANTINGARM/K/L ASSY	*	8 -102349		1			
22	2213-738-301-00	ARM,PLANTING/E/LH	*	8 -101046					
22A	2213-738-301-10	PLANTER/LH/E	*	8 -102349		1	4L		
23	2204-738-412-00	COVER/PLANTING/PZ/E	*	8 -102349					
24	2142-736-235-00	GASKET	*	8 -102349					

FIG.193 COMPONENT PARTS(2/2)
FOR 2204-738-400-90 ON Fig.143

50~53-PLEASE SEE 1/2 PAGE

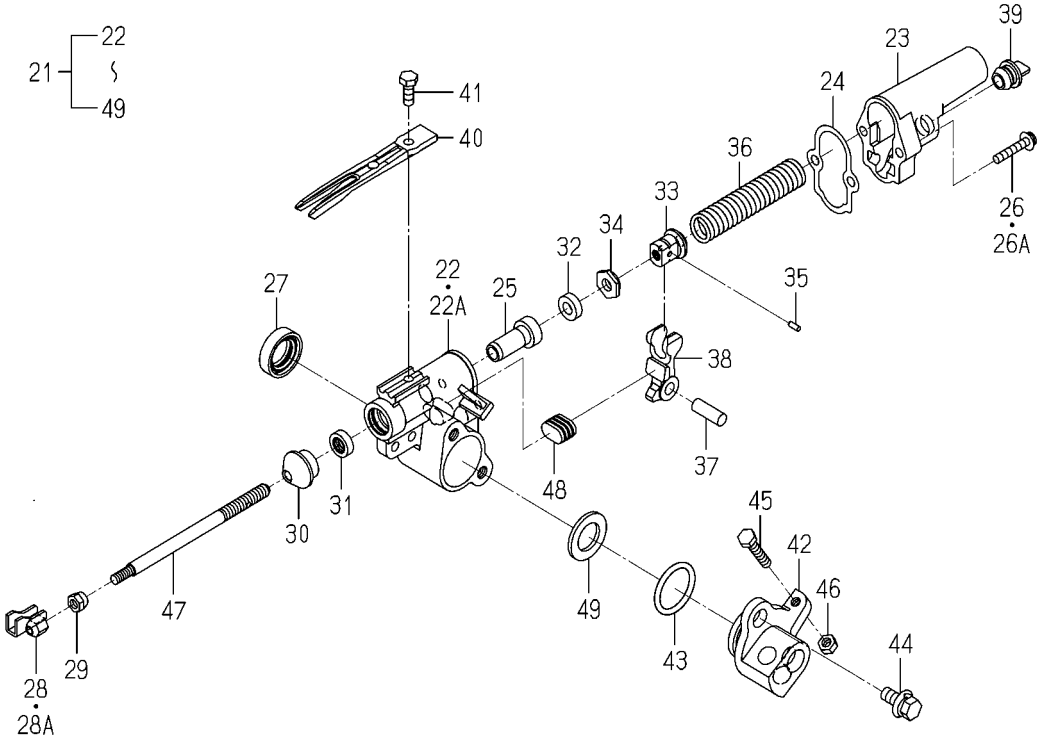

2204-738-400-9L

KEY	PART CODE	DESCRIPTION	SPC	TYPE OF MODEL PZ80E16		ITC	COL	GRP	REMARKS
25	2204-738-304-10	BUSH/08X18X35	*	8 -102349					
26	V120-366-002-50	SOREN/SP/M6X25	*	16 -101046					
26A	V120-366-003-00	SCREW/SP	*	16 -102349					
27	2161-738-222-00	SEAL,OIL	*	8 -102349					
28	2204-738-240-00	FORK	*	8 -101649					
28A	2204-738-240-20	FROK/PLANT COMP	*	8 -102349		1			
29	2140-738-003-10	NUT,LOCKED	*	8 -102349					
30	2186-738-048-10	SEAL,DUST	*	8 -102349					
31	2213-738-303-00	GREASESEAL/PZ/E	*	8 -102349					
32	2703-501-006-00	CUSHION	*	8 -102349					
33	2204-738-414-00	PUSHINGOUTNUT/E	*	8 -102349					
34	2703-501-008-00	NUT,LOCK PUSH OUT	*	8 -102349					
35	V523-100-300-80	PIN	*	8 -102349					
36	2204-738-413-10	SPRING/HC086	*	8 -102349					
37	2142-736-239-00	PIN,ARM PUSH-OUT	*	8 -102349					
38	2204-738-318-10	ARM/PUSH-OUT/PZ	*	8 -102349					
39	2204-738-411-00	CAP/YELLOW/12	*	8 -102349					
40	2186-740-033-20	FINGER/14/G	*	8 -102349					
41	2204-738-059-00	BOLT/M6X16	*	8 -102349					
42	2204-738-312-00	HUB/PLANTING ARM	*	8 -102349			4L		
43	V720-103-502-80	O-RING/P28	*	8 -102349					
44	2186-738-059-00	BOLT/M8X20/SP/S	*	16 -102349					
45	V200-700-603-00	BOLT	*	8 -102349					
46	V301-700-006-00	NUT	*	8 -102349					
47	2204-738-317-00	SHAFT/PLANTING-FORK	*	8 -102349					
48	2204-738-319-00	CUSHION/ARM/PZ	*	8 -102349					
49	2204-738-325-00	WASHER/M18	*	8 -102349					
50	2204-738-313-00	PIN/LOCKED	*	8 -102349					
51	2204-738-323-00	WASHER/09X18X03	*	8 -102349					
52	V401-700-008-00	WASHER/LOCK	*	8 -102349					

FIG.193 COMPONENT PARTS(2/2)
FOR 2204-738-400-90 ON Fig.143

50~53-PLEASE SEE 1/2 PAGE

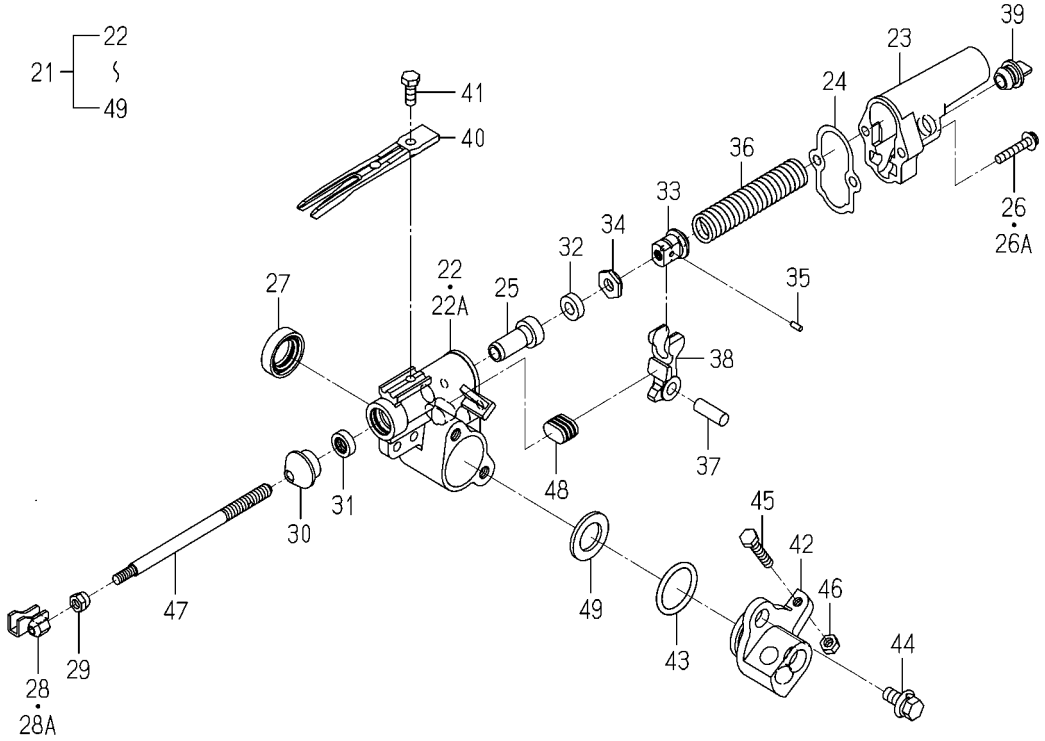

2204-738-400-9L

KEY	PART CODE	DESCRIPTION	SPC	TYPE OF MODEL PZ80E16		ITC	COL	GRP	REMARKS
53	V304-700-008-00	NUT	*	8 -102349					

FIG.194 COMPONENT PARTS(1/2)
FOR 2204-738-440-10 ON Fig.143

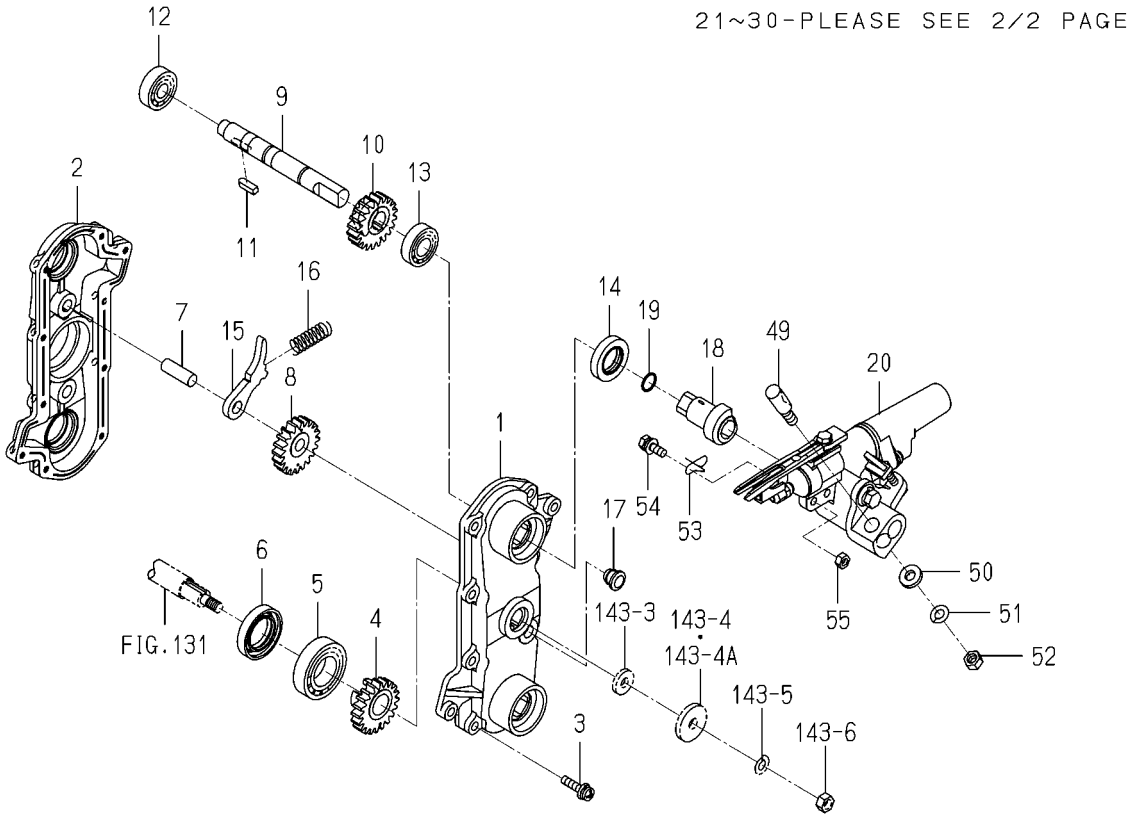

2204-738-440-1C

KEY	PART CODE	DESCRIPTION	SPC	TYPE OF MODEL PZ80E16		ITC	COL	GRP	REMARKS
1	2204-738-340-00	CASE/ROTERY/OUT/LH	*	4 102350-					
2	2213-738-271-00	CASE/ROTARY/IN/E	*	4 102350-					
3	V120-366-002-50	SOREN/SP/M6X25	*	40 102350-					
4	2204-738-273-00	GEAR,SUN/LH	*	4 102350-					
5	V600-110-600-50	BEARING,RB/6005	*	4 102350-					
6	2142-736-224-00	SEAL,OIL	*	4 102350-					
7	2142-736-214-00	PIN,COUNTER,GEAR	*	8 102350-					
8	2204-738-274-00	GEAR,COUNTER	*	8 102350-					
9	2204-738-275-20	SHAFT/PLANTING ARM/L	*	8 102350-					
10	2204-738-277-00	GEAR/LH	*	8 102350-					
11	2142-736-271-00	KEY,05X05X18 PLUS	*	8 102350-					
12	V600-110-620-10	BEARING,RB/6201	*	8 102350-					
13	V600-110-600-20	BEARING,RB/6002	*	8 102350-					
14	2144-738-216-00	SEAL,OIL	*	8 102350-					
15	2161-738-611-00	ARM LH	*	8 102350-					
16	2142-736-221-00	SPRING/HC037	*	8 102350-					
17	2186-738-038-20	CAP/10	*	4 102350-					
18	2204-738-307-00	CAM/PUSHED OUT/LH	*	8 102350-					
19	2161-738-008-00	O-RING/OR	*	16 102350-					
20	2204-738-410-60	PLANTINGARM/K/L ASSY	*	8 102350-					
21	2213-738-301-10	PLANTER/LH/E	*	8 102350-			4L		
22	2204-738-412-10	COVER/PLANTING/PZ/E	*	8 102350-					
23	2142-736-235-00	GASKET	*	8 102350-					
24	2204-738-304-10	BUSH/08X18X35	*	8 102350-					
25	V120-366-003-00	SCREW/SP	*	16 102350-					
26	2161-738-222-00	SEAL,OIL	*	8 102350-					
27	2204-738-240-20	FROK/PLANT COMP	*	8 102350-					
28	2140-738-003-10	NUT,LOCKED	*	8 102350-					
29	2186-738-048-10	SEAL,DUST	*	8 102350-					
30	2213-738-303-00	GREASESEAL/PZ/E	*	8 102350-					

FIG.194 COMPONENT PARTS(2/2) FOR 2204-738-440-10 ON Fig.143

49~55-PLEASE SEE 1/2 PAGE

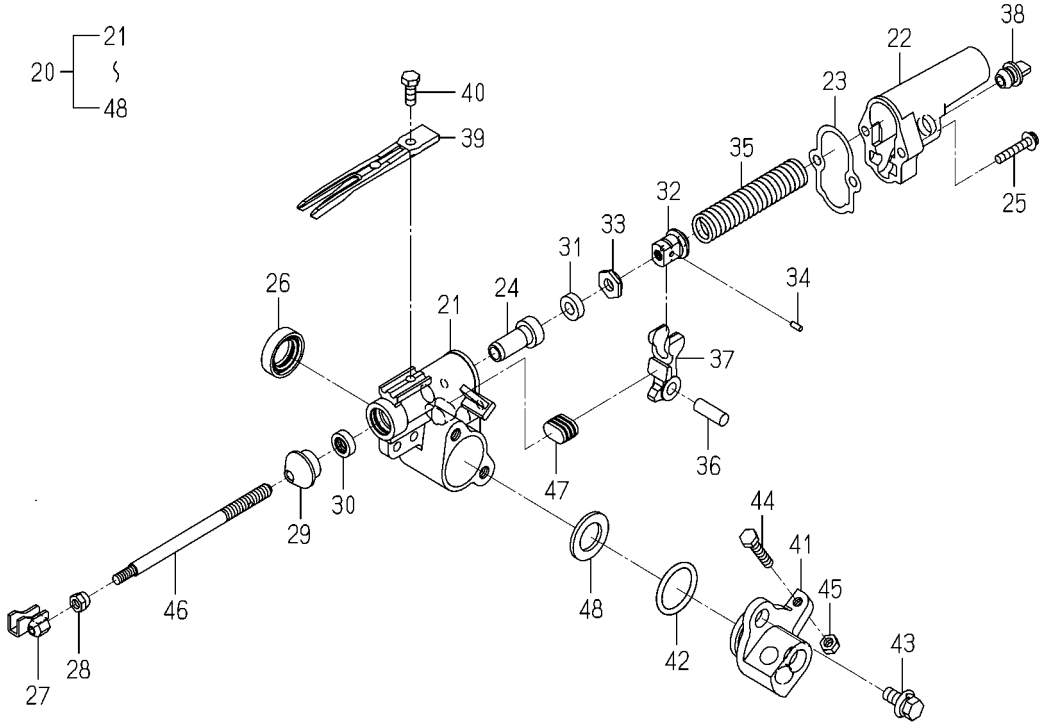

2204-738-440-1C

KEY	PART CODE	DESCRIPTION	SPC	TYPE OF MODEL PZ80E16		ITC	COL	GRP	REMARKS
31	2703-501-006-00	CUSHION	*	8 102350-					
32	2204-738-414-00	PUSHINGOUTNUT/E	*	8 102350-					
33	2703-501-008-00	NUT,LOCK PUSH OUT	*	8 102350-					
34	V523-100-300-80	PIN	*	8 102350-					
35	2204-738-413-10	SPRING/HC086	*	8 102350-					
36	2142-736-239-00	PIN,ARM PUSH-OUT	*	8 102350-					
37	2204-738-318-10	ARM/PUSH-OUT/PZ	*	8 102350-					
38	2204-738-001-00	CAP/YELLOW/10/KNOB	*	8 102350-					
39	2186-740-033-20	FINGER/14/G	*	8 102350-					
40	2204-738-059-00	BOLT/M6X16	*	8 102350-					
41	2204-738-312-00	HUB/PLANTING ARM	*	8 102350-			4L		
42	V720-103-502-80	O-RING/P28	*	8 102350-					
43	2186-738-059-00	BOLT/M8X20/SP/S	*	16 102350-					
44	V200-700-603-00	BOLT	*	8 102350-					
45	V301-700-006-00	NUT	*	8 102350-					
46	2204-738-317-00	SHAFT/PLANTING-FORK	*	8 102350-					
47	2204-738-319-00	CUSHION/ARM/PZ	*	8 102350-					
48	2204-738-325-00	WASHER/M18	*	8 102350-					
49	2204-738-313-00	PIN/LOCKED	*	8 102350-					
50	2204-738-323-00	WASHER/09X18X03	*	8 102350-					
51	V401-700-008-00	WASHER/LOCK	*	8 102350-					
52	V304-700-008-00	NUT	*	8 102350-					
53	2213-738-005-00	PIN/LH	*	8 102350-					
54	V210-360-602-00	BOLT/SP	*	16 102350-					
55	V301-260-006-00	NUT/M6	*	16 102350-					

FIG.195 COMPONENT PARTS(1/2)
FOR 2204-739-400-90 ON Fig.144

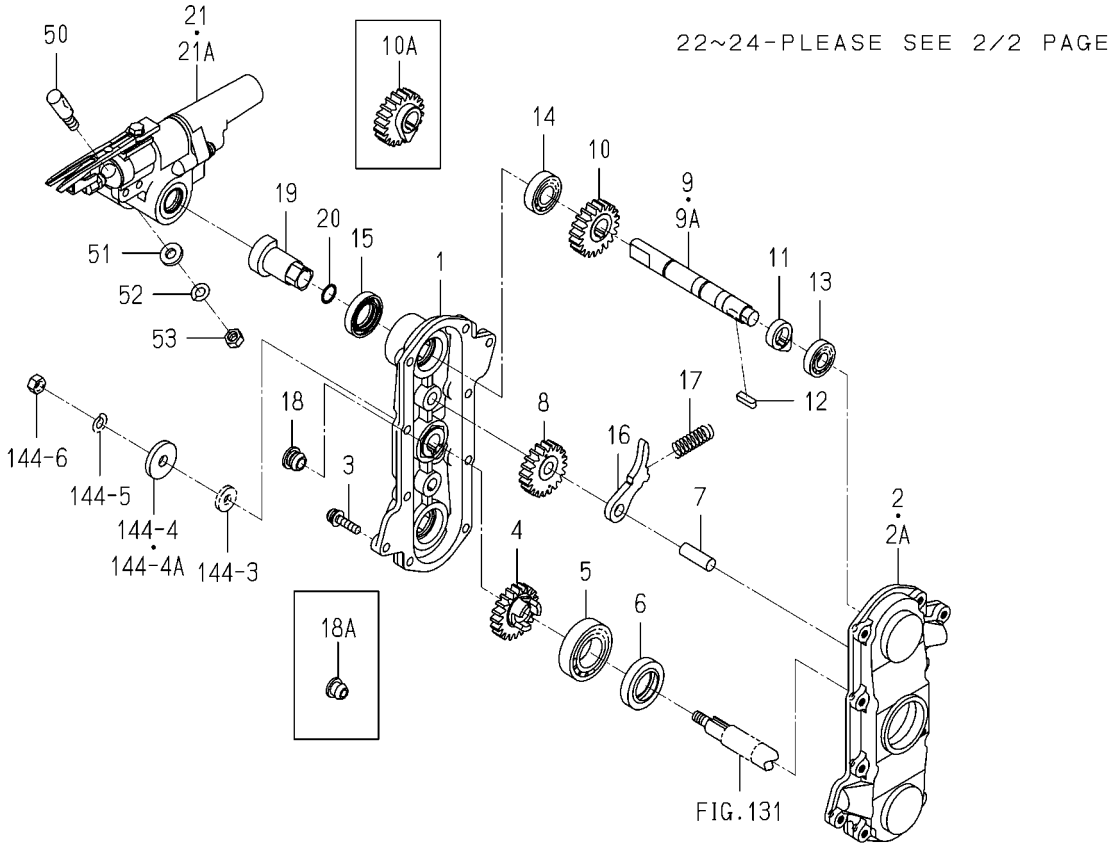

2204-739-400-9L

KEY	PART CODE	DESCRIPTION	SPC	TYPE OF MODEL PZ80E16		ITC	COL	GRP	REMARKS
1	2204-739-340-00	CASE/ROTERY/OUT/RH	*	4 -102349					
2	2204-739-282-00	CASE/ROTERY/INNER/RH	*	4 -101649					
2A	2204-739-282-10	CASE/ROTARY/IN/RH	*	4 -102349		1			
3	V120-366-002-50	SOREN/SP/M6X25	*	40 -102349					
4	2204-739-273-00	GEAR/SUN/RH	*	4 -102349					
5	V600-110-600-50	BEARING,RB/6005	*	4 -102349					
6	2142-736-224-00	SEAL,OIL	*	4 -102349					
7	2142-736-214-00	PIN,COUNTER,GEAR	*	8 -102349					
8	2204-738-274-00	GEAR,COUNTER	*	8 -102349					
9	2204-739-275-10	SHAFT/PLANTING ARM/R	*	8 -102175					
9A	2204-739-275-20	SHAFT/PLANTING ARM/R	*	8 -102349		1			
10	2204-738-276-00	GEAR	*	8 -101649					
10A	2204-739-277-00	GEAR/RH	*	8 -102349					
11	2144-736-221-00	CAM	*	8 -101649					
12	2142-736-271-00	KEY,05X05X18 PLUS	*	8 -102349					
13	V600-110-600-10	BEARING,RB/6001	*	8 -102349					
14	V600-110-600-20	BEARING,RB/6002	*	8 -102349					
15	2144-738-216-00	SEAL,OIL	*	8 -102349					
16	2161-739-611-00	ARM LH	*	8 -102349					
17	2142-736-221-00	SPRING/HC037	*	8 -102349					
18	2142-736-236-00	PLUG	*	4 -101649					
18A	2186-738-038-20	CAP/10	*	4 -102349					
19	2204-739-307-00	CAM/PUSHED OUT/RH	*	8 -102349					
20	2161-738-008-00	O-RING/OR	*	16 -102349					
21	2204-739-410-20	PLANTINGARM/K/R ASSY	*	8 -102175					
21A	2204-739-410-50	PLANTINGARM/K/R ASSY	*	8 -102349		1			
22	2213-739-301-00	ARM,PLANTING/E/LH	*	8 -101046					
22A	2213-739-301-10	PLANTER/RH/E	*	8 -102349		1	4L		
23	2204-738-412-00	COVER/PLANTING/PZ/E	*	8 -102349					
24	2142-736-235-00	GASKET	*	8 -102349					

FIG.195 COMPONENT PARTS(2/2)
FOR 2204-739-400-90 ON Fig.144

50~53-PLEASE SEE 1/2 PAGE

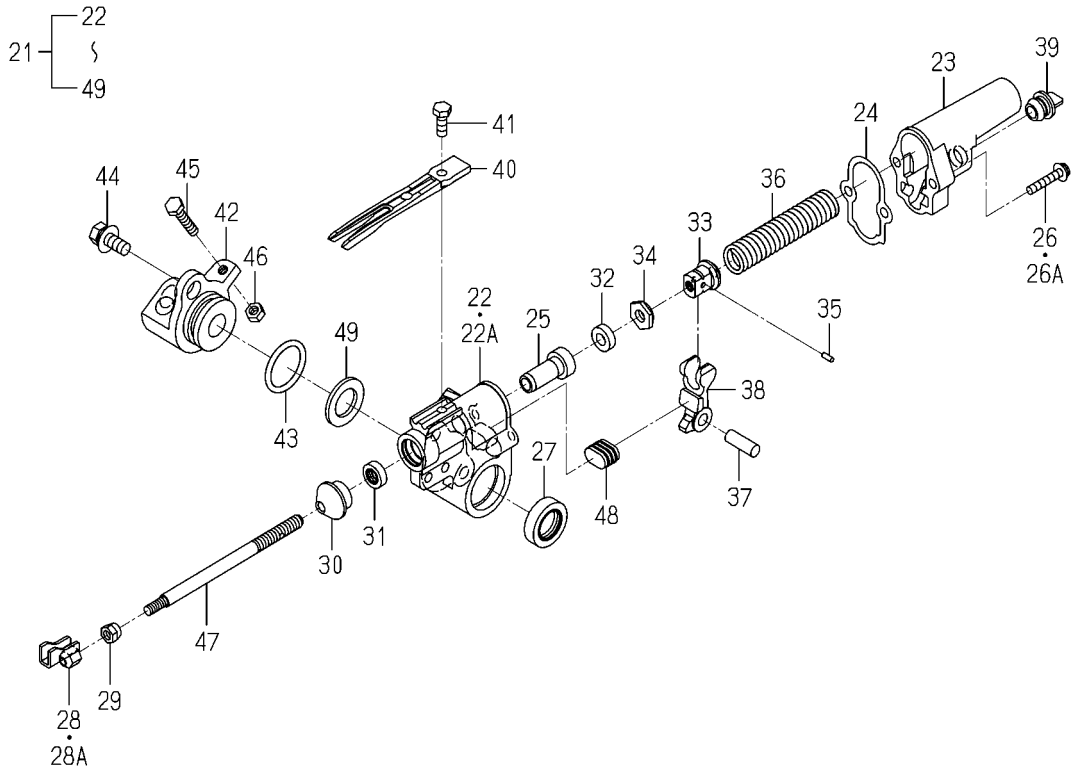

2204-739-400-9L

KEY	PART CODE	DESCRIPTION	SPC	TYPE OF MODEL PZ80E16		ITC	COL	GRP	REMARKS
25	2204-738-304-10	BUSH/08X18X35	*	8 -102349					
26	V120-366-002-50	SOREN/SP/M6X25	*	16 -101046					
26A	V120-366-003-00	SCREW/SP	*	16 -102349					
27	2161-738-222-00	SEAL,OIL	*	8 -102349					
28	2204-738-240-00	FORK	*	8 -101649					
28A	2204-738-240-20	FROK/PLANT COMP	*	8 -102349		1			
29	2140-738-003-10	NUT,LOCKED	*	8 -102349					
30	2186-738-048-10	SEAL,DUST	*	8 -102349					
31	2213-738-303-00	GREASESEAL/PZ/E	*	8 -102349					
32	2703-501-006-00	CUSHION	*	8 -102349					
33	2204-738-414-00	PUSHINGOUTNUT/E	*	8 -102349					
34	2703-501-008-00	NUT,LOCK PUSH OUT	*	8 -102349					
35	V523-100-300-80	PIN	*	8 -102349					
36	2204-738-413-10	SPRING/HC086	*	8 -102349					
37	2142-736-239-00	PIN,ARM PUSH-OUT	*	8 -102349					
38	2204-738-318-10	ARM/PUSH-OUT/PZ	*	8 -102349					
39	2204-738-411-00	CAP/YELLOW/12	*	8 -102349					
40	2186-740-033-20	FINGER/14/G	*	8 -102349					
41	2204-738-059-00	BOLT/M6X16	*	8 -102349					
42	2204-738-312-00	HUB/PLANTING ARM	*	8 -102349			4L		
43	V720-103-502-80	O-RING/P28	*	8 -102349					
44	2186-738-059-00	BOLT/M8X20/SP/S	*	16 -102349					
45	V200-700-603-00	BOLT	*	8 -102349					
46	V301-700-006-00	NUT	*	8 -102349					
47	2204-738-317-00	SHAFT/PLANTING-FORK	*	8 -102349					
48	2204-738-319-00	CUSHION/ARM/PZ	*	8 -102349					
49	2204-738-325-00	WASHER/M18	*	8 -102349					
50	2204-738-313-00	PIN/LOCKED	*	8 -102349					
51	2204-738-323-00	WASHER/09X18X03	*	8 -102349					
52	V401-700-008-00	WASHER/LOCK	*	8 -102349					

FIG.195 COMPONENT PARTS(2/2)
FOR 2204-739-400-90 ON Fig.144

50~53-PLEASE SEE 1/2 PAGE

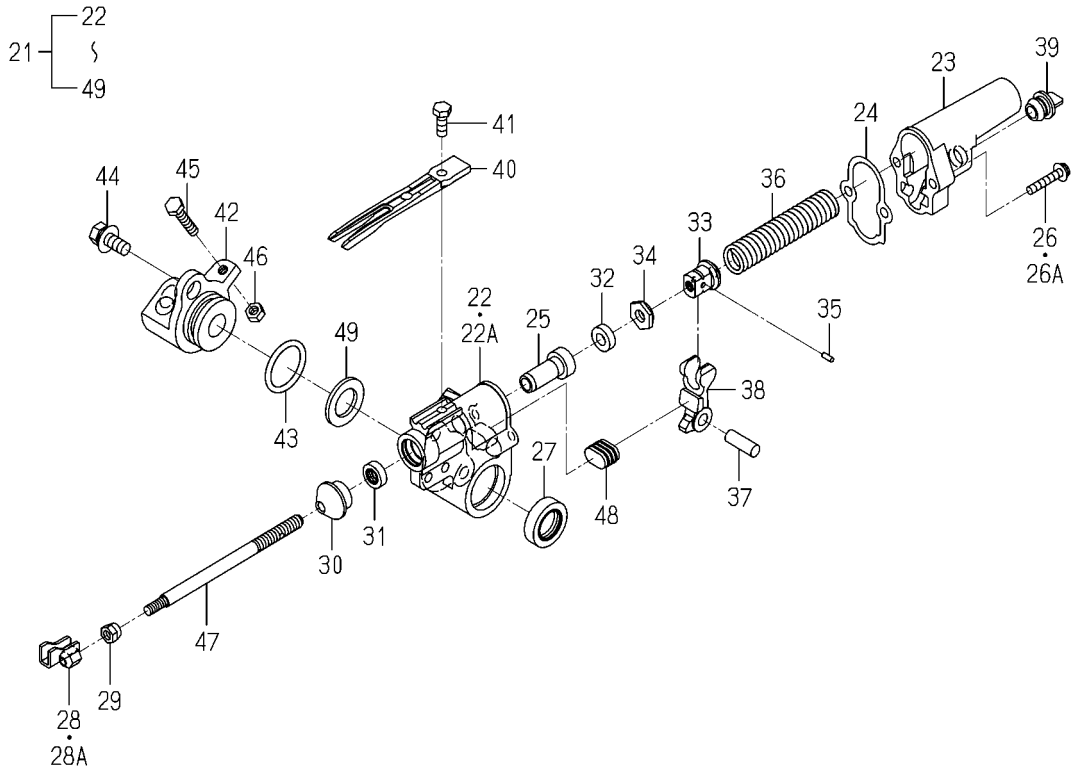

2204-739-400-9L

KEY	PART CODE	DESCRIPTION	SPC	TYPE OF MODEL PZ80E16		ITC	COL	GRP	REMARKS
53	V304-700-008-00	NUT	*	8 -102349					

FIG.196 COMPONENT PARTS(1/2)
FOR 2204-739-440-10 ON Fig.144

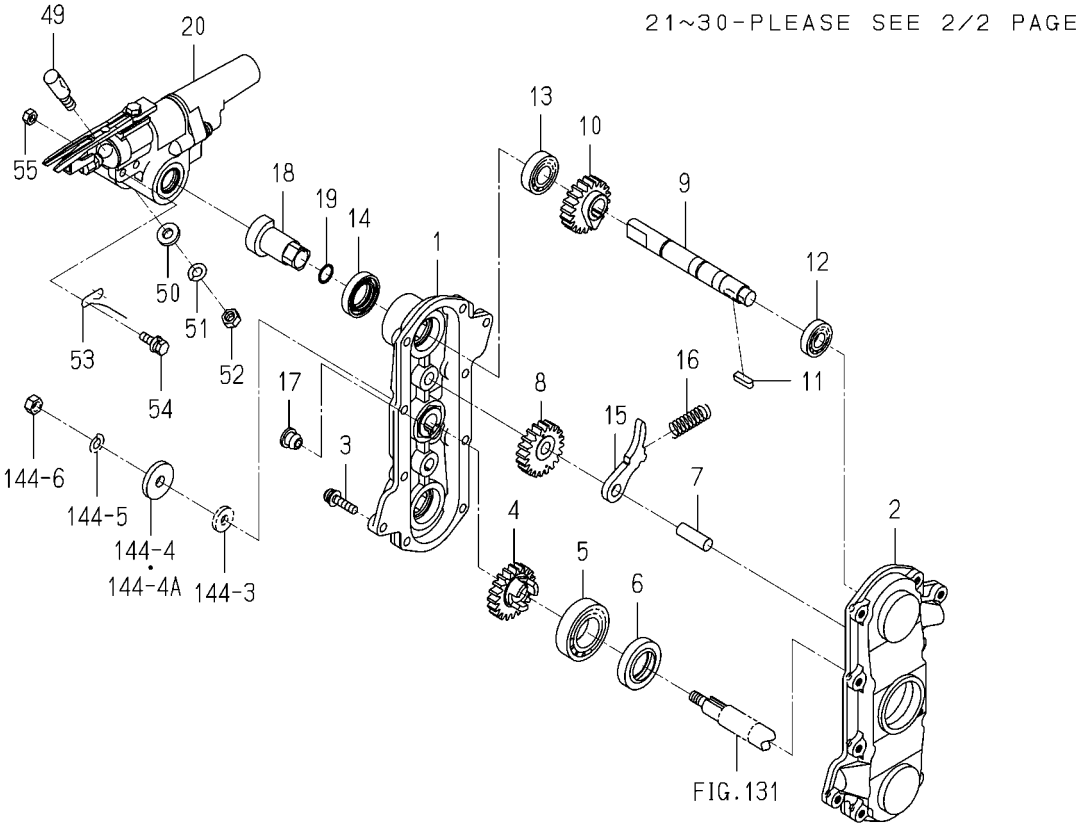

2204-739-440-1C

KEY	PART CODE	DESCRIPTION	SPC	TYPE OF MODEL PZ80E16		ITC	COL	GRP	REMARKS
1	2204-739-340-00	CASE/ROTERY/OUT/RH	*	4 102350-					
2	2213-739-271-00	CASE/ROTARY/IN/E	*	4 102350-					
3	V120-366-002-50	SOREN/SP/M6X25	*	40 102350-					
4	2204-739-273-00	GEAR/SUN/RH	*	4 102350-					
5	V600-110-600-50	BEARING,RB/6005	*	4 102350-					
6	2142-736-224-00	SEAL,OIL	*	4 102350-					
7	2142-736-214-00	PIN,COUNTER,GEAR	*	8 102350-					
8	2204-738-274-00	GEAR,COUNTER	*	8 102350-					
9	2204-739-275-20	SHAFT/PLANTING ARM/R	*	8 102350-					
10	2204-739-277-00	GEAR/RH	*	8 102350-					
11	2142-736-271-00	KEY,05X05X18 PLUS	*	8 102350-					
12	V600-110-620-10	BEARING,RB/6201	*	8 102350-					
13	V600-110-600-20	BEARING,RB/6002	*	8 102350-					
14	2144-738-216-00	SEAL,OIL	*	8 102350-					
15	2161-739-611-00	ARM LH	*	8 102350-					
16	2142-736-221-00	SPRING/HC037	*	8 102350-					
17	2186-738-038-20	CAP/10	*	4 102350-					
18	2204-739-307-00	CAM/PUSHED OUT/RH	*	8 102350-					
19	2161-738-008-00	O-RING/OR	*	16 102350-					
20	2204-739-410-60	PLANTINGARM/K/R ASSY	*	8 102350-					
21	2213-739-301-10	PLANTER/RH/E	*	8 102350-			4L		
22	2204-738-412-10	COVER/PLANTING/PZ/E	*	8 102350-					
23	2142-736-235-00	GASKET	*	8 102350-					
24	2204-738-304-10	BUSH/08X18X35	*	8 102350-					
25	V120-366-003-00	SCREW/SP	*	16 102350-					
26	2161-738-222-00	SEAL,OIL	*	8 102350-					
27	2204-738-240-20	FROK/PLANT COMP	*	8 102350-					
28	2140-738-003-10	NUT,LOCKED	*	8 102350-					
29	2186-738-048-10	SEAL,DUST	*	8 102350-					
30	2213-738-303-00	GREASESEAL/PZ/E	*	8 102350-					

FIG.196 COMPONENT PARTS(2/2)
FOR 2204-739-440-10 ON Fig.144

49~55-PLEASE SEE 1/2 PAGE

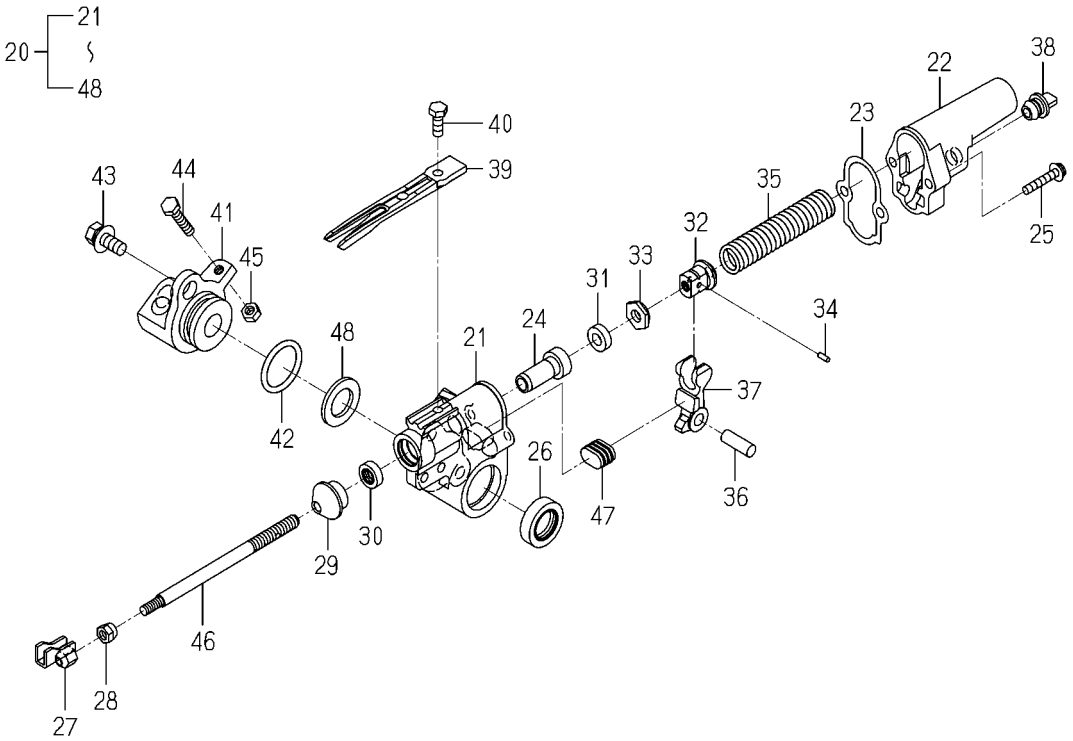

2204-739-440-1C

KEY	PART CODE	DESCRIPTION	SPC	TYPE OF MODEL PZ80E16		ITC	COL	GRP	REMARKS
31	2703-501-006-00	CUSHION	*	8 102350-					
32	2204-738-414-00	PUSHINGOUTNUT/E	*	8 102350-					
33	2703-501-008-00	NUT,LOCK PUSH OUT	*	8 102350-					
34	V523-100-300-80	PIN	*	8 102350-					
35	2204-738-413-10	SPRING/HC086	*	8 102350-					
36	2142-736-239-00	PIN,ARM PUSH-OUT	*	8 102350-					
37	2204-738-318-10	ARM/PUSH-OUT/PZ	*	8 102350-					
38	2204-738-001-00	CAP/YELLOW/10/KNOB	*	8 102350-					
39	2186-740-033-20	FINGER/14/G	*	8 102350-					
40	2204-738-059-00	BOLT/M6X16	*	8 102350-					
41	2204-738-312-00	HUB/PLANTING ARM	*	8 102350-			4L		
42	V720-103-502-80	O-RING/P28	*	8 102350-					
43	2186-738-059-00	BOLT/M8X20/SP/S	*	16 102350-					
44	V200-700-603-00	BOLT	*	8 102350-					
45	V301-700-006-00	NUT	*	8 102350-					
46	2204-738-317-00	SHAFT/PLANTING-FORK	*	8 102350-					
47	2204-738-319-00	CUSHION/ARM/PZ	*	8 102350-					
48	2204-738-325-00	WASHER/M18	*	8 102350-					
49	2204-738-313-00	PIN/LOCKED	*	8 102350-					
50	2204-738-323-00	WASHER/09X18X03	*	8 102350-					
51	V401-700-008-00	WASHER/LOCK	*	8 102350-					
52	V304-700-008-00	NUT	*	8 102350-					
53	2213-739-005-00	PIN/RH	*	8 102350-					
54	V210-360-602-00	BOLT/SP	*	16 102350-					
55	V301-260-006-00	NUT/M6	*	16 102350-					

FIG.197 COMPONENT PARTS FOR 8844-718-200-10 ON Fig.170

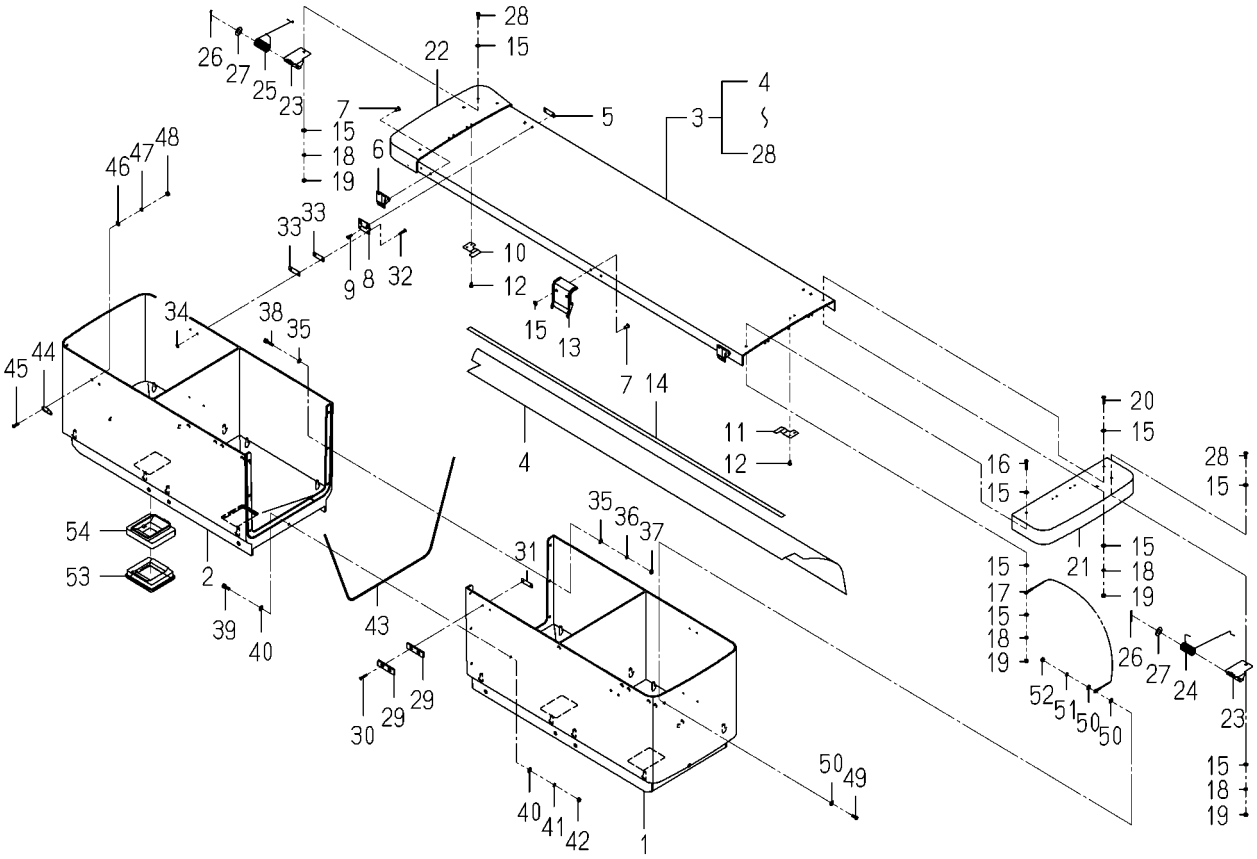

8844-718-200-1H

KEY	PART CODE	DESCRIPTION	SPC	TYPE OF MODEL PZ80E16		ITC	COL	GRP	REMARKS
1	8844-718-211-00	HOPPER/2/RH/8	*	2 -101649					
2	8844-718-212-00	HOPPER/2/RH/8	*	2 -101649					
3	8844-718-220-10	HOPPERCOVER/4/Z COMP	*	2 -101649					
4	8841-718-001-10	SEAT,HOPPER/4	*	2 -101649					
5	2145-771-203-10	PLATE	*	4 -101649					
6	8841-716-230-10	HOOK	*	4 -101649					
7	8836-730-209-00	RIVET/BLIND/0	*	12 -101649					
8	8831-302-201-00	PLATE,BUTTERFLY	*	4 -101649					
9	8836-730-221-00	WASHER/LOCK	*	8 -101649					
10	8841-716-018-00	PLATE,HOPPER/RH	*	2 -101649					
11	8841-716-017-00	PLATE,HOPPER/LH	*	2 -101649					
12	8841-716-009-00	PIN/+	*	8 -101649					
13	8841-716-001-00	HOOK,CAP	*	2 -101649					
14	8841-716-214-00	TAPE,ACRYLIC FORM	*	2 -101649					
15	V411-700-004-00	WASHER	*	40 -101649					
16	V111-704-002-00	SCREW	*	4 -101649					
17	8836-730-006-00	CABLE/HOPPER/F	*	4 -101649					
18	V401-700-004-00	WASHER/LOCK	*	16 -101649					
19	V301-700-004-00	NUT	*	16 -101649					
20	V111-704-001-60	SCREW	*	4 -101649					
21	8844-715-222-10	HOPPER/SIDE/PZ	*	2 -101649					
22	8844-715-223-10	HOPPER/SIDE/PZ	*	2 -101649					
23	8844-715-006-10	PLATE/SPRING	*	4 -101649					
24	8844-718-004-10	SPRING/HT016/8LH	*	2 -101649					
25	8844-718-003-10	SPRING/HT016/8RH	*	2 -101649					
26	2188-208-015-00	PIN,COTTER/2.5X20/SU	*	4 -101649					
27	V411-700-008-00	WASHER	*	4 -101649					
28	V111-704-001-20	SCREW	*	8 -101649					
29	8841-716-002-00	HOOK,HOPPER	*	4 -101649					
30	8836-730-215-00	RIVET/BLIND/0	*	4 -101649					

FIG.197 COMPONENT PARTS FOR 8844-718-200-10 ON Fig.170

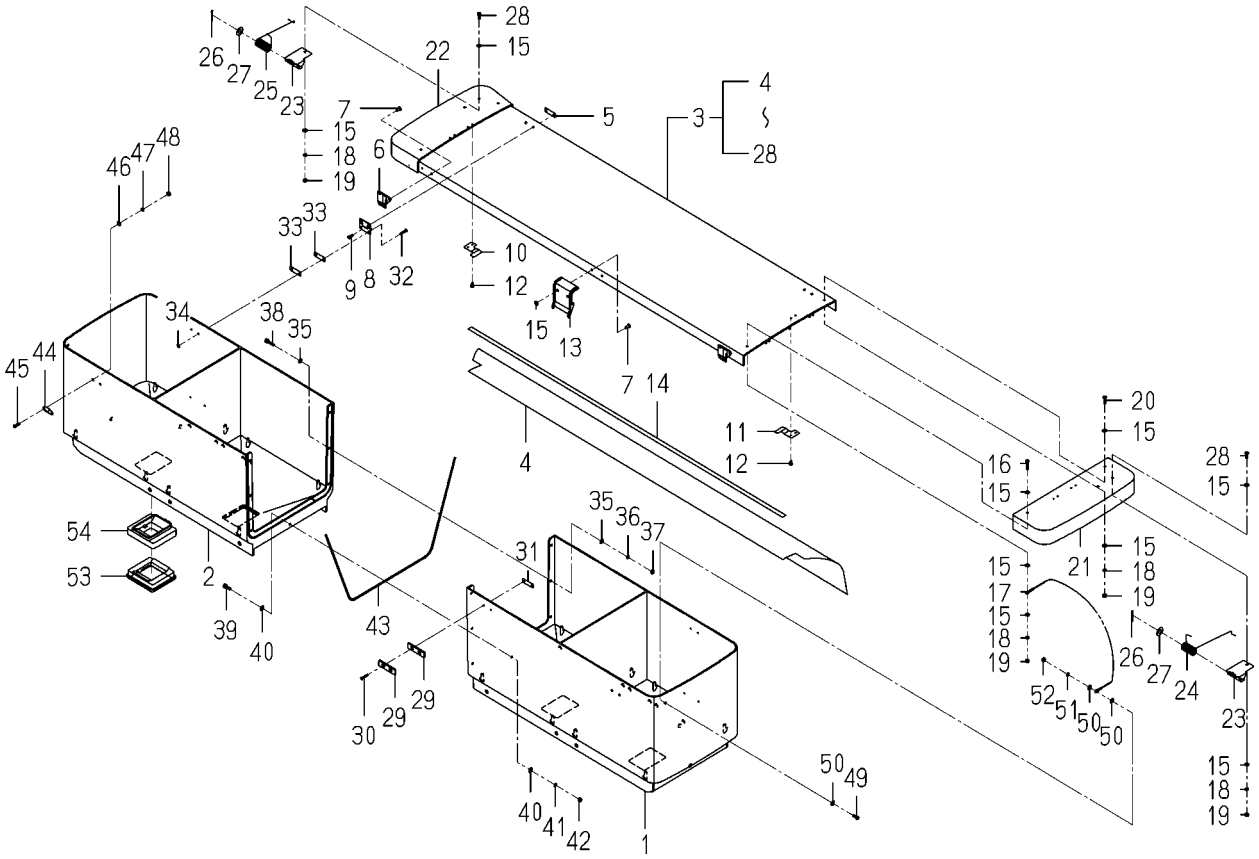

8844-718-200-1H

KEY	PART CODE	DESCRIPTION	SPC	TYPE OF MODEL PZ80E16		ITC	COL	GRP	REMARKS
31	2145-771-203-10	PLATE	*	2 -101649					
32	8836-730-215-00	RIVET/BLIND/0	*	12 -101649					
33	2145-771-203-10	PLATE	*	12 -101649					
34	V411-700-003-00	WASHER	*	12 -101649					
35	V411-700-004-00	WASHER	*	24 -101649					
36	V401-700-004-00	WASHER/LOCK	*	12 -101649					
37	V301-700-004-00	NUT	*	12 -101649					
38	8841-716-011-00	BOLT/M4X20/SUS	*	8 -101649					
39	8836-730-216-00	BOLT/M4X14/SUS	*	6 -101649					
40	V411-700-004-00	WASHER	*	4 -101649					
41	V401-700-004-00	WASHER/LOCK	*	2 -101649					
42	V301-700-004-00	NUT	*	2 -101649					
43	8844-718-001-00	PACKING/HOPPER	*	2 -101649					
44	8841-716-019-00	HOCK	*	4 -101649					
45	V111-704-001-20	SCREW	*	8 -101649					
46	V411-700-004-00	WASHER	*	8 -101649					
47	V401-700-004-00	WASHER/LOCK	*	16 -101649					
48	V301-700-004-00	NUT	*	8 -101649					
49	V111-164-001-20	SCREW/M4X12	*	4 -101649					
50	V411-700-004-00	WASHER	*	12 -101649					
51	V401-700-004-00	WASHER/LOCK	*	4 -101649					
52	V301-700-004-00	NUT	*	4 -101649					
53	8842-715-002-00	GASKET/HOPPER/PG	*	8 -101649					
54	8842-715-001-10	HOPPERGUIDE/FG	*	8 -101649					

FIG.198 COMPONENT PARTS FOR 8844-718-310-40 ON Fig.171

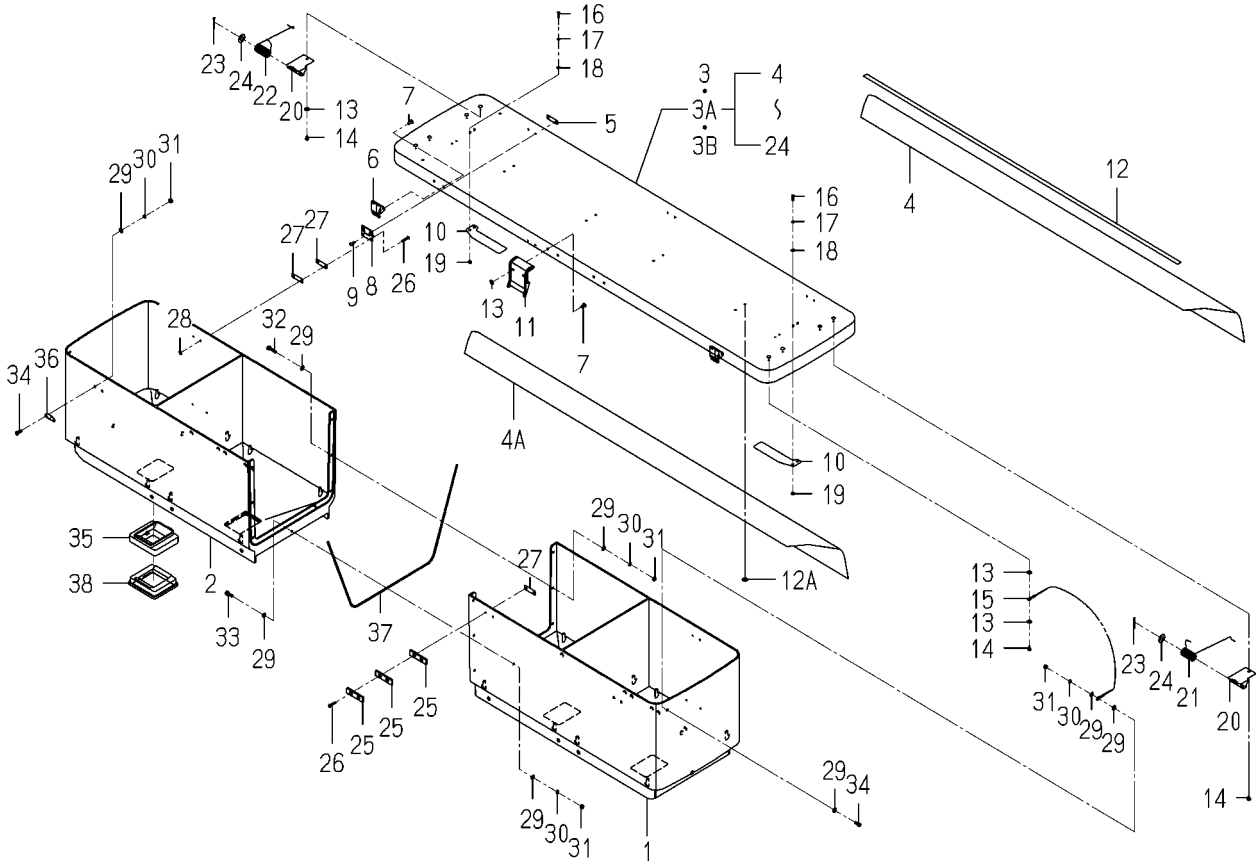

8844-718-310-4D

KEY	PART CODE	DESCRIPTION	SPC	TYPE OF MODEL PZ80E16		ITC	COL	GRP	REMARKS
1	8844-718-211-00	HOPPER/2/RH/8	*	2 101650-					
2	8844-718-212-00	HOPPER/2/RH/8	*	2 101650-					
3	8844-718-320-10	HOPPERCOVER/4/K COMP	*	2 -101744					
3A	8844-718-320-20	HOPPERCOVER/4/K COMP	*	2 -102221		1			
3B	8844-718-320-30	HOPPERCOVER/4/K COMP	*	2 102222-		1			
4	8844-711-222-00	SEATHOPPER/4/P	*	2 -102200					
4A	8844-711-222-10	SEATHOPPER/4/P	*	2 102201-		3			
5	2145-771-203-10	PLATE	*	4 101650-					
6	8841-716-230-10	HOOK	*	4 101650-					
7	8836-730-209-00	RIVET/BLIND/0	*	12 101650-					
8	8831-302-201-00	PLATE,BUTTERFLY	*	4 101650-					
9	8836-730-221-00	WASHER/LOCK	*	8 101650-					
10	8844-711-223-00	PLATE/HOPPER/4/P	*	4 101650-					
11	8841-716-001-00	HOOK,CAP	*	2 101650-					
12	8841-716-214-00	TAPE,ACRYLIC FORM	*	2 -102221					
12A	2151-250-003-00	NUT,SPEED/4	*	8 102222-					
13	V411-700-004-00	WASHER	*	12 101650-					
14	8841-716-009-00	PIN/+	*	12 101650-					
15	8836-730-006-00	CABLE/HOPPER/F	*	4 101650-					
16	V111-703-001-20	SCREW	*	8 101650-					
17	V401-700-003-00	WASHER/LOCK	*	8 101650-					
18	V411-700-003-00	WASHER	*	8 101650-					
19	V301-700-003-00	NUT	*	8 101650-					
20	8844-715-006-10	PLATE/SPRING	*	4 101650-					
21	8844-718-004-10	SPRING/HT016/8LH	*	2 101650-					
22	8844-718-003-10	SPRING/HT016/8RH	*	2 101650-					
23	2188-208-015-00	PIN,COTTER/2.5X20/SU	*	4 101650-					
24	V411-700-008-00	WASHER	*	4 101650-					
25	8841-716-002-00	HOOK,HOPPER	*	6 101650-					
26	8836-730-215-00	RIVET/BLIND/0	*	12 101650-					

FIG.198 COMPONENT PARTS FOR 8844-718-310-40 ON Fig.171

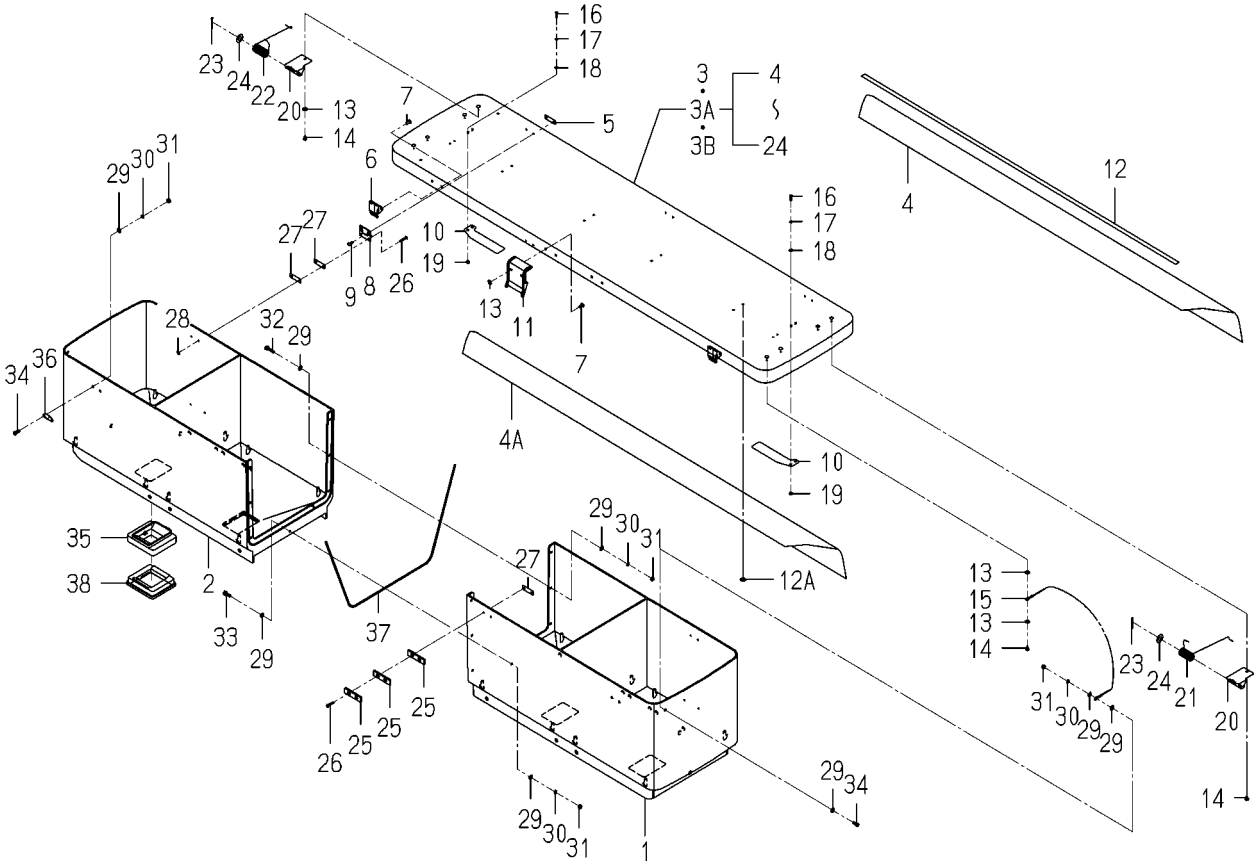

8844-718-310-4D

KEY	PART CODE	DESCRIPTION	SPC	TYPE OF MODEL PZ80E16		ITC	COL	GRP	REMARKS
27	2145-771-203-10	PLATE	*	10 101650-					
28	V411-700-003-00	WASHER	*	8 101650-					
29	V411-700-004-00	WASHER	*	48 101650-					
30	V401-700-004-00	WASHER/LOCK	*	26 101650-					
31	V301-700-004-00	NUT	*	26 101650-					
32	8841-716-011-00	BOLT/M4X20/SUS	*	8 101650-					
33	8836-730-216-00	BOLT/M4X14/SUS	*	6 101650-					
34	V111-704-001-20	SCREW	*	12 101650-					
35	8842-715-001-10	HOPPERGUIDE/FG	*	8 101650-					
36	8841-716-019-00	HOCK	*	4 101650-					
37	8844-718-001-00	PACKING/HOPPER	*	2 101650-					
38	8842-715-002-00	GASKET/HOPPER/PG	*	8 101650-					

WIRING DIAGRAM(D-F TYPE)(1/4)

(DF TYPE)

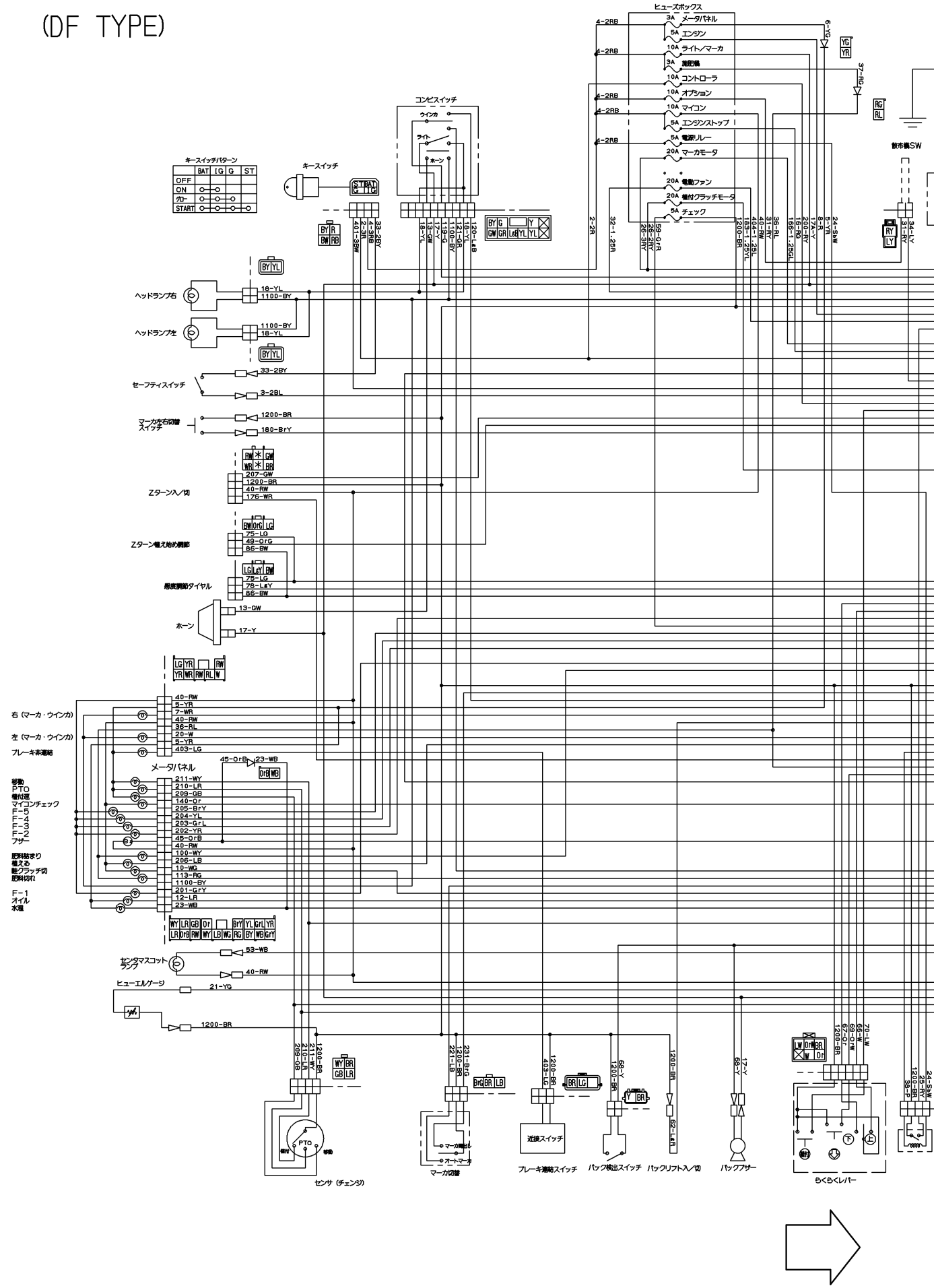

WIRING DIAGRAM(D-F TYPE)(2/4)

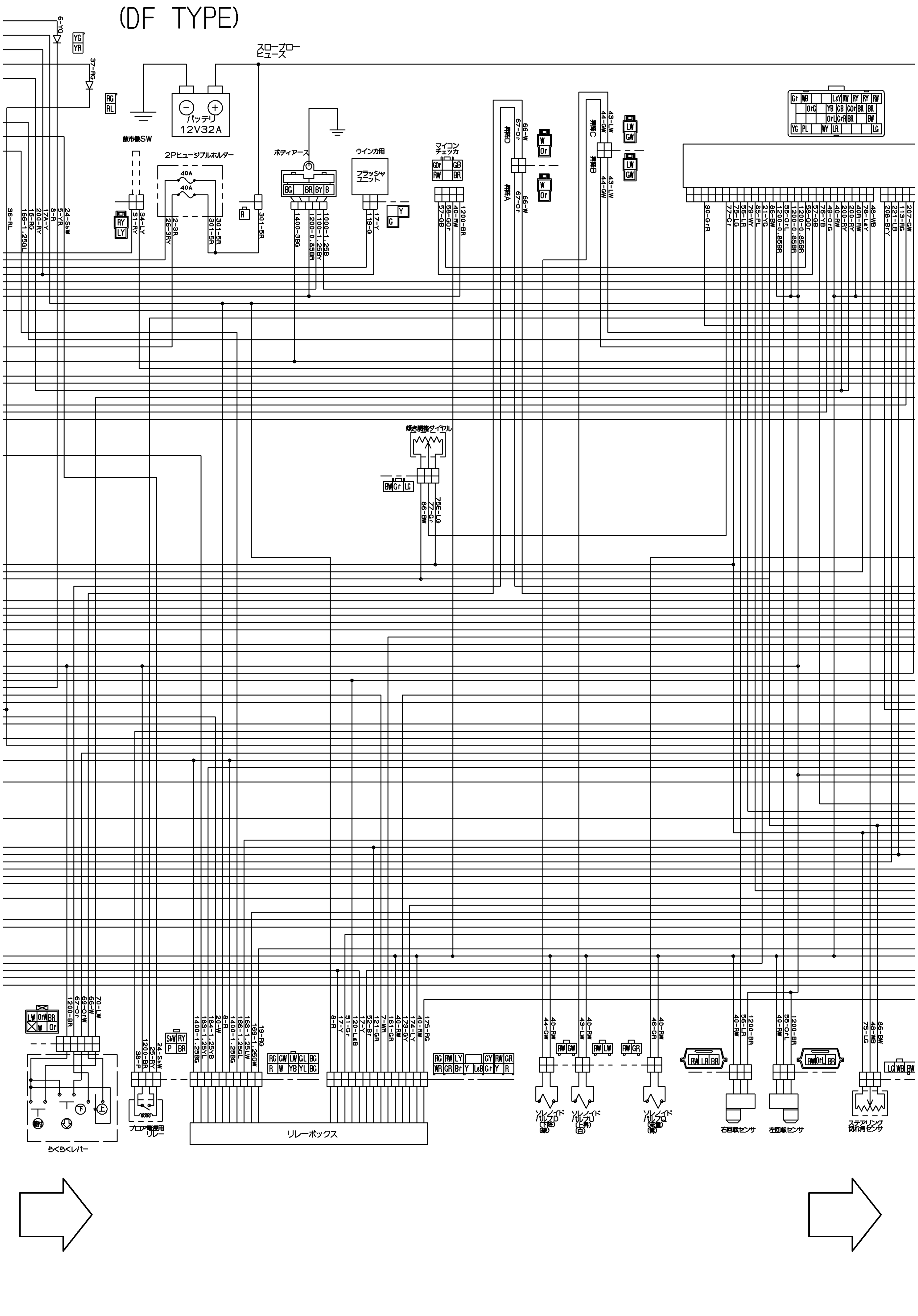

WIRING DIAGRAM(D-F TYPE)(3/4)

(DF TYPE)

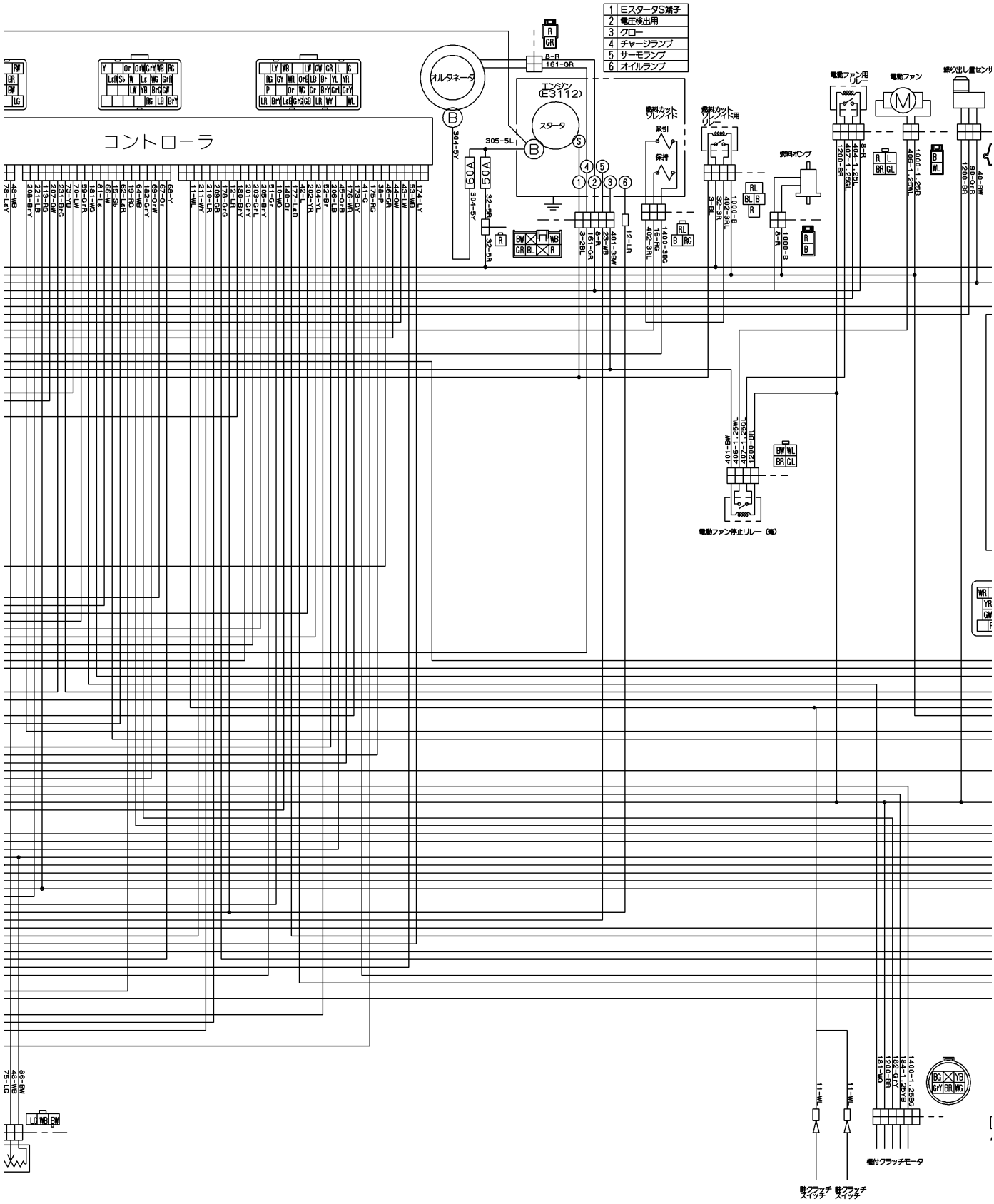

WIRING DIAGRAM(D-F TYPE)(4/4)

(DF TYPE)

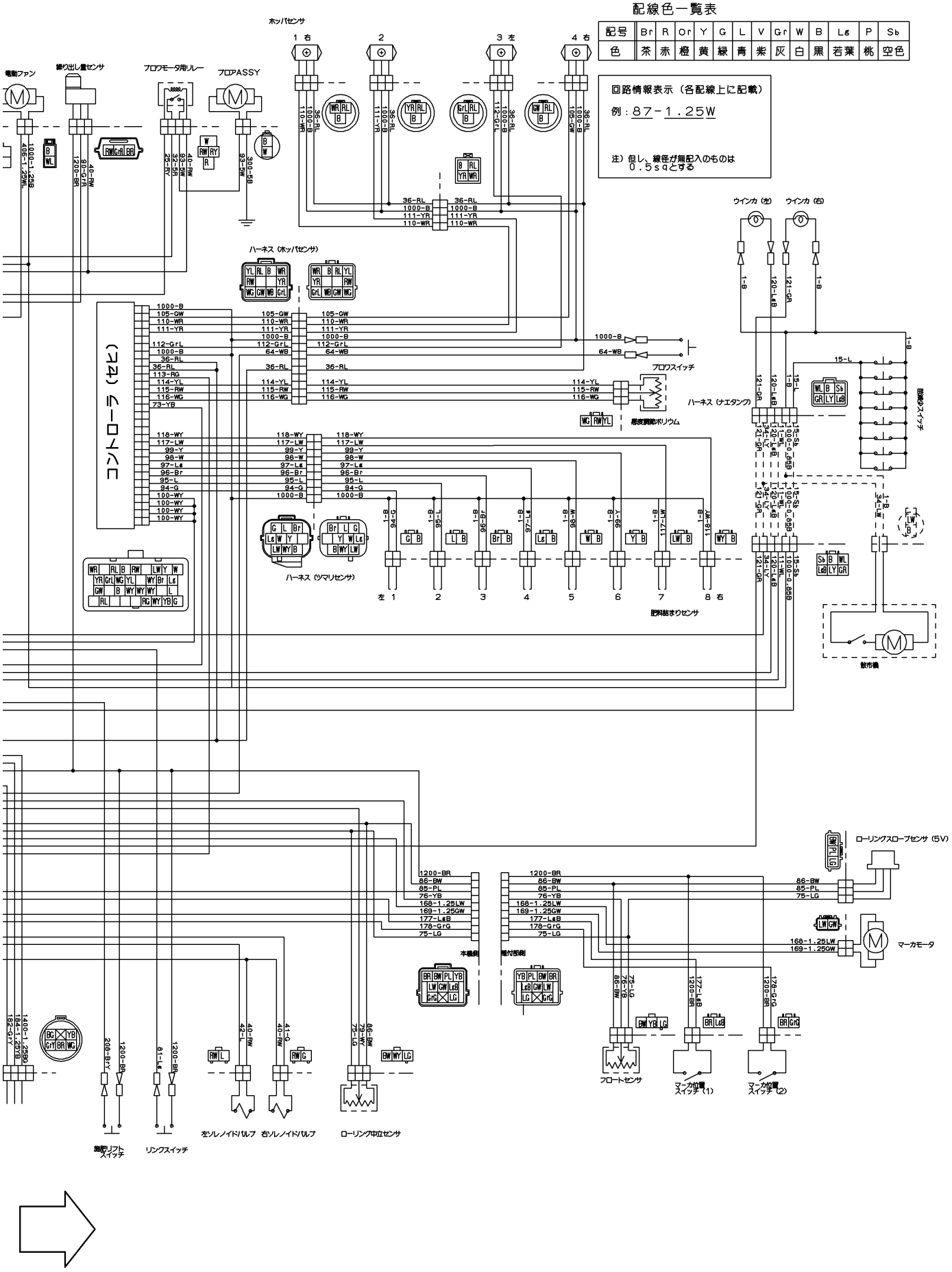

WIRING DIAGRAM(G-F TYPE)(1/4)

(GF TYPE)

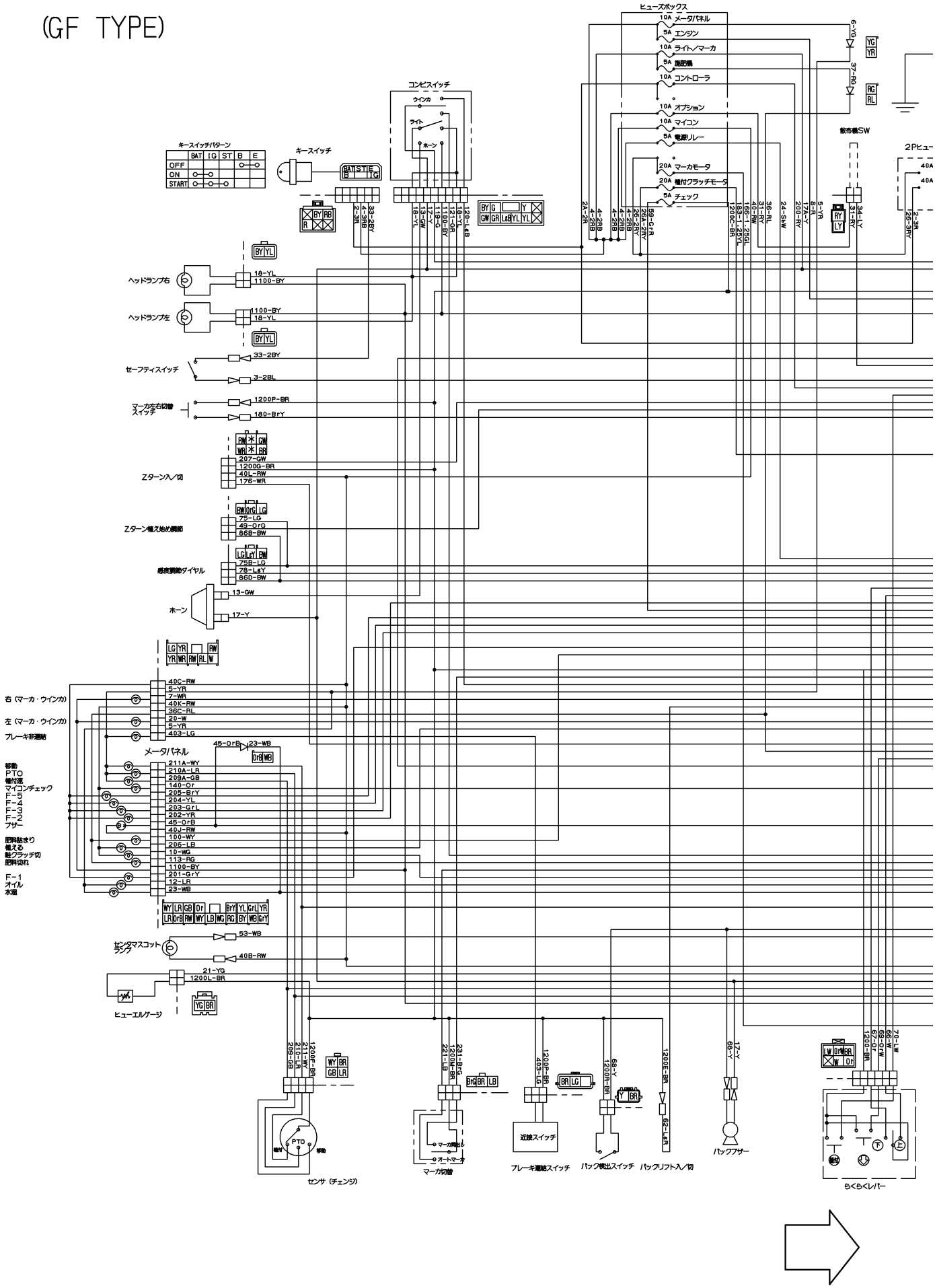

WIRING DIAGRAM(G-F TYPE)(2/4)

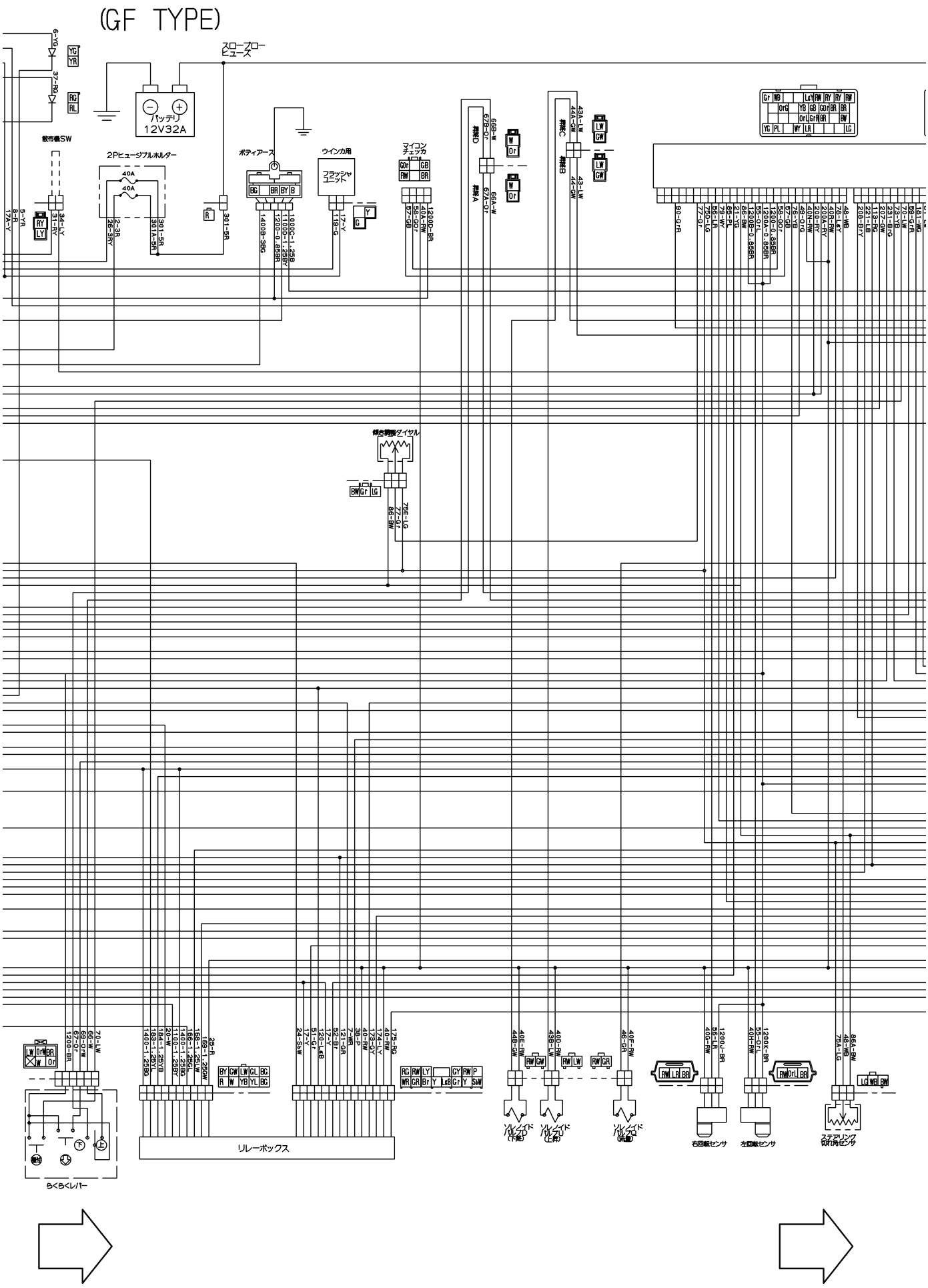

WIRING DIAGRAM(G-F TYPE)(3/4)

(GF TYPE)

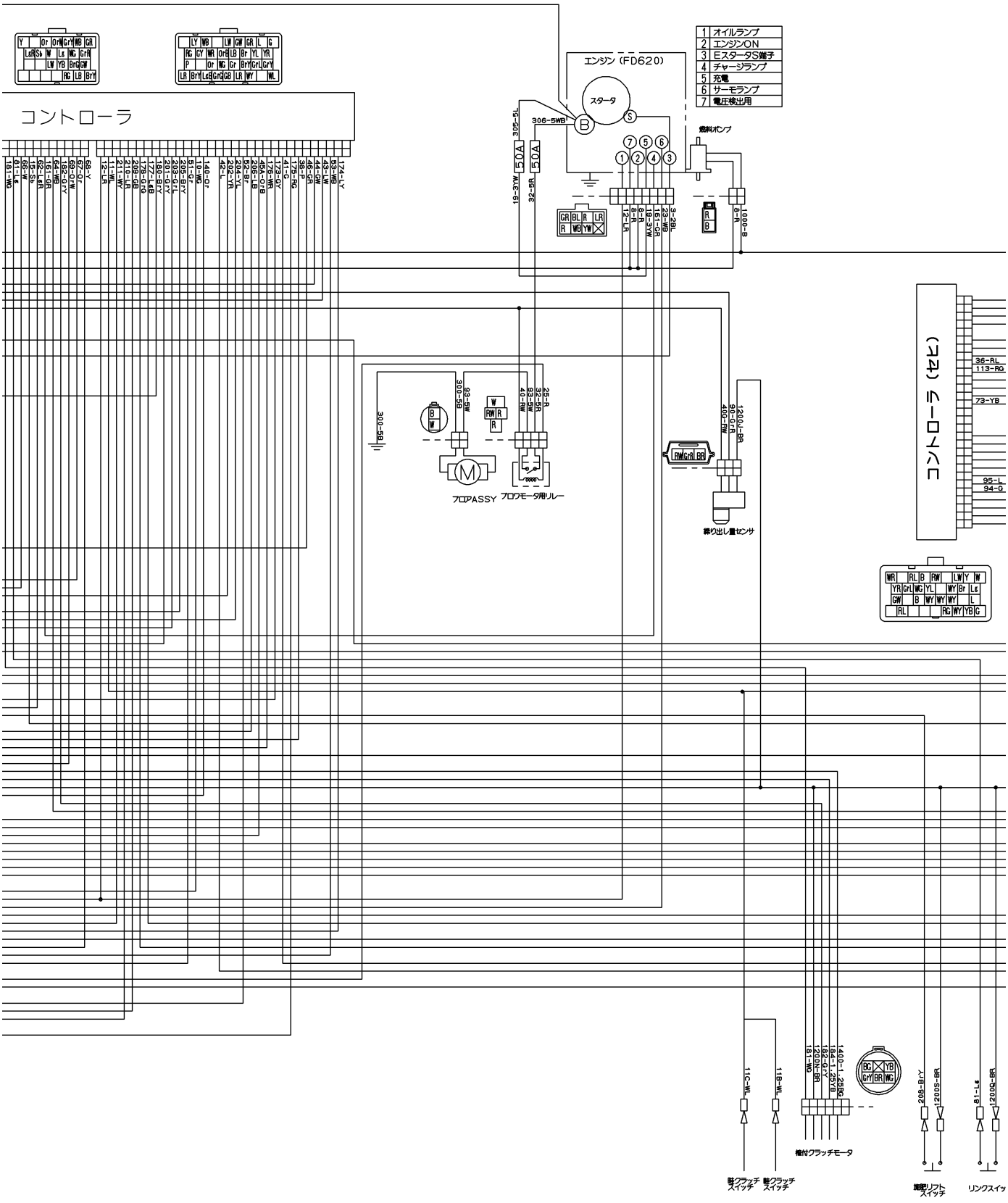

WIRING DIAGRAM(G-F TYPE)(4/4)

(GF TYPE)

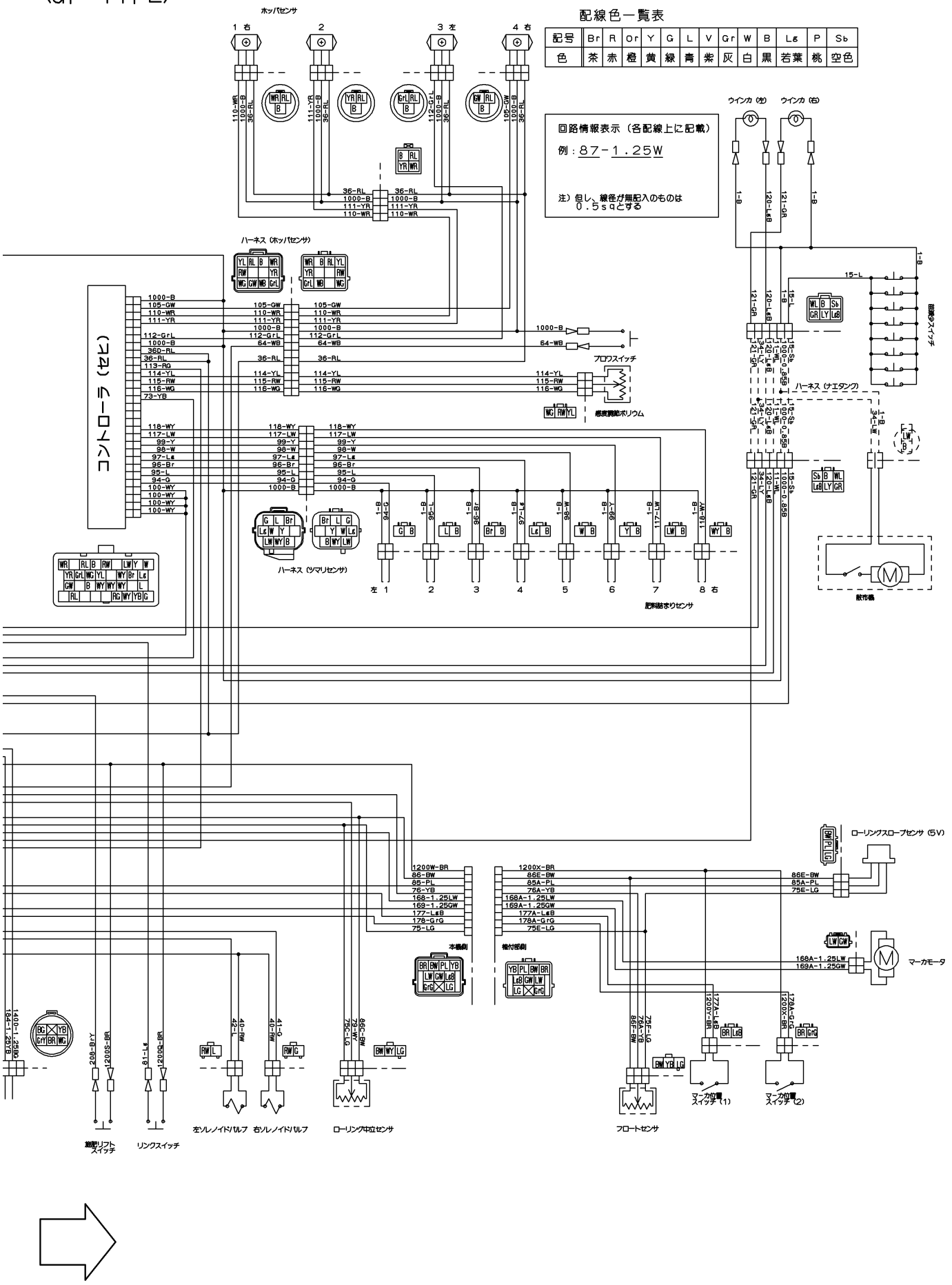

WIRING DIAGRAM(D TYPE EXCEPT F)(1/4)

(D TYPE)

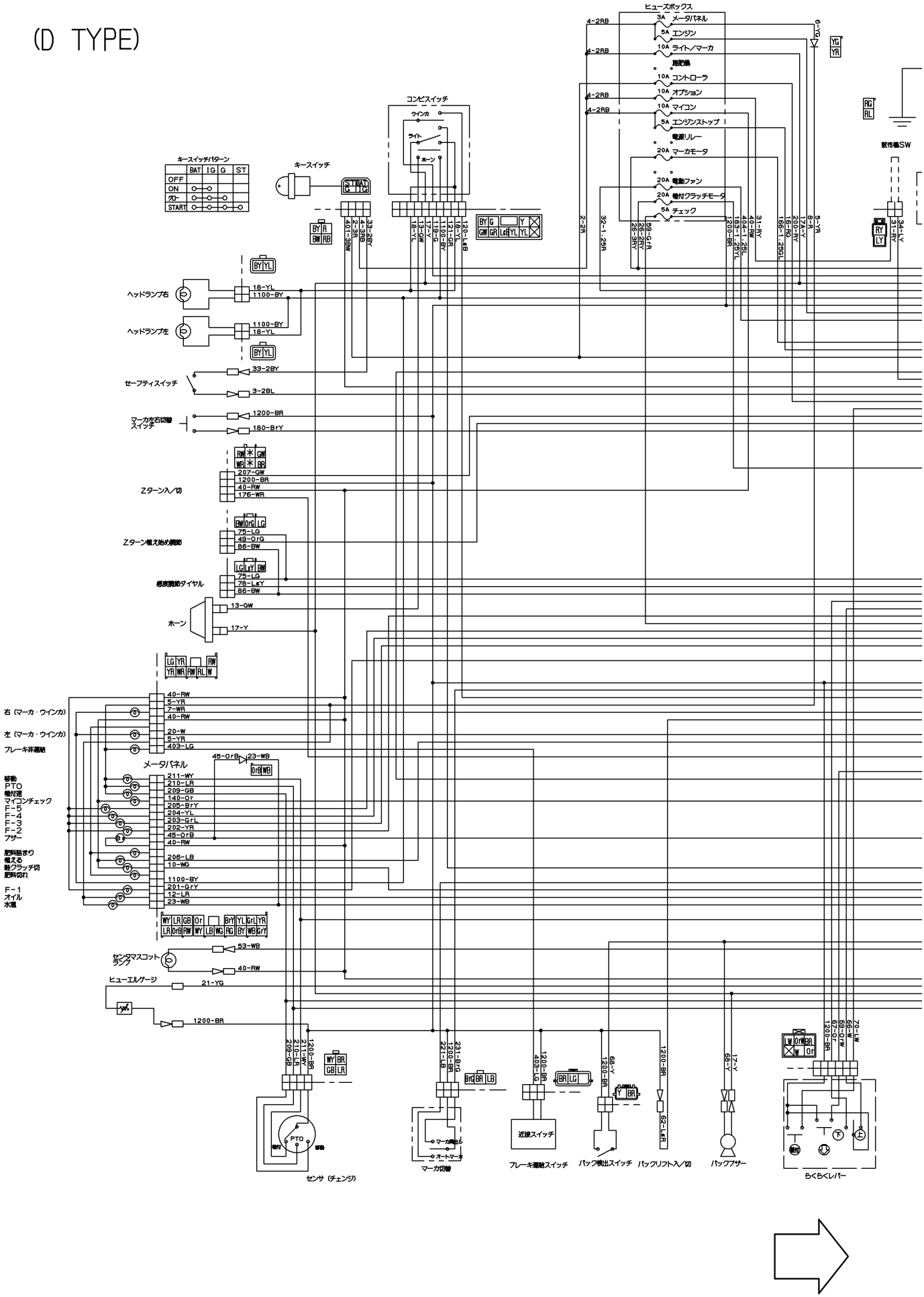

WIRING DIAGRAM(D TYPE EXCEPT F)(2/4)

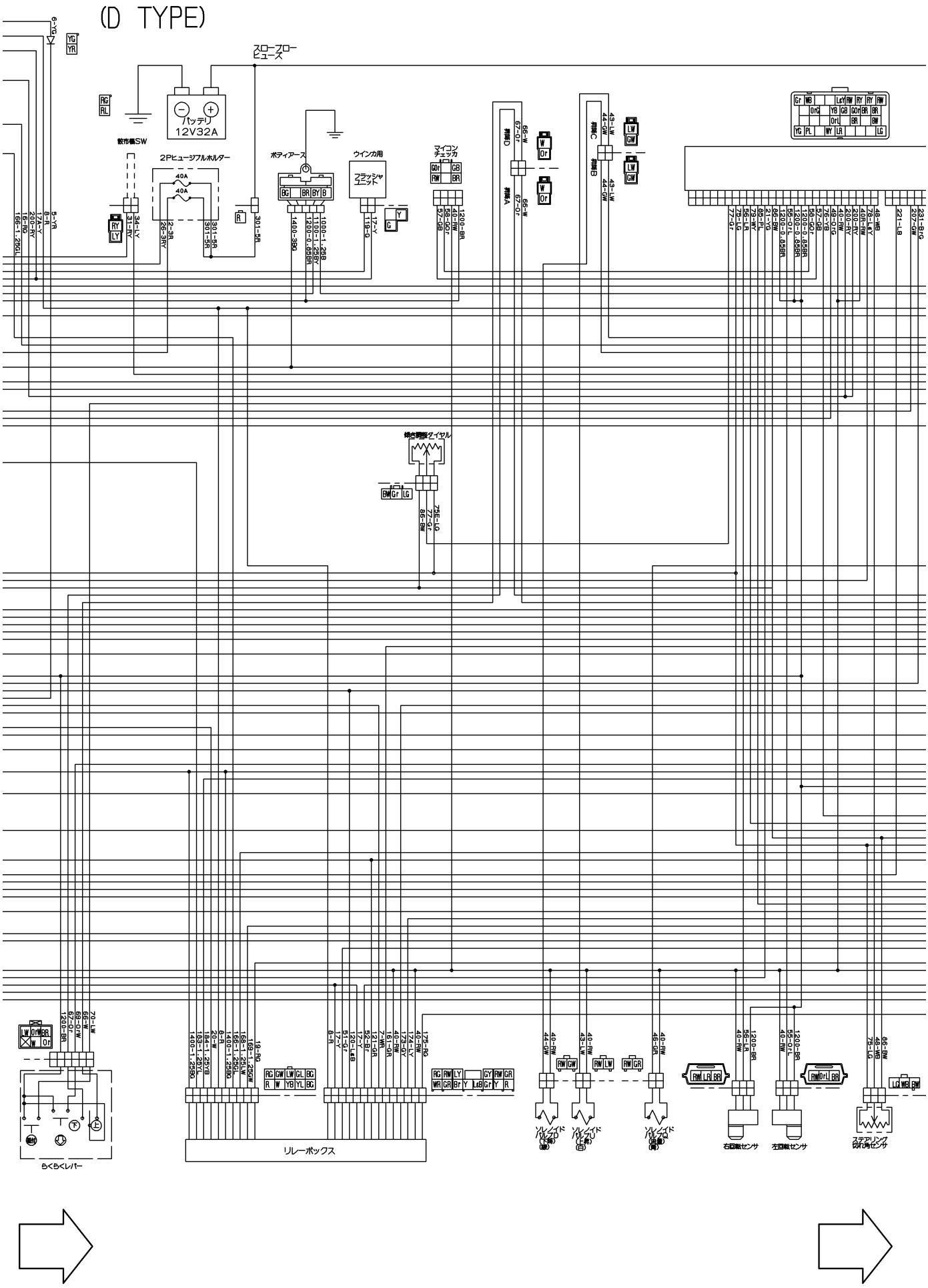

WIRING DIAGRAM(D TYPE EXCEPT F)(3/4)

(D TYPE)

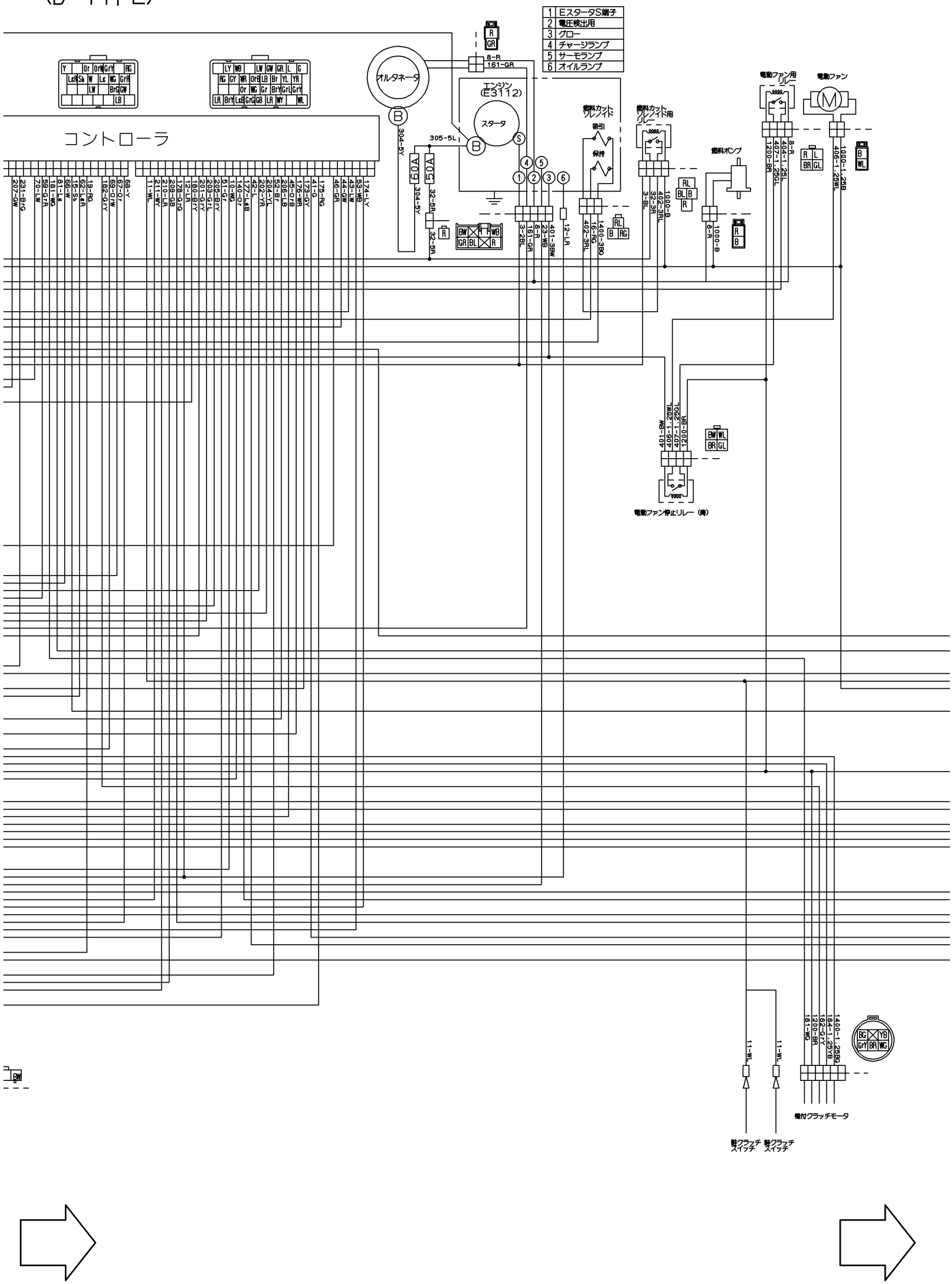

WIRING DIAGRAM(D TYPE EXCEPT F)(4/4)

(D TYPE)

配線色一覧表

記号	Br	R	Or	Y	G	L	V	Gr	W	B	Lg	P	Sb
色	茶	赤	橙	黄	緑	青	紫	灰	白	黒	若葉	桃	空色

回路情報表示（各配線上に記載）
例：87－1.25W

注）但し、線径が無記入のものは
0.5sqとする

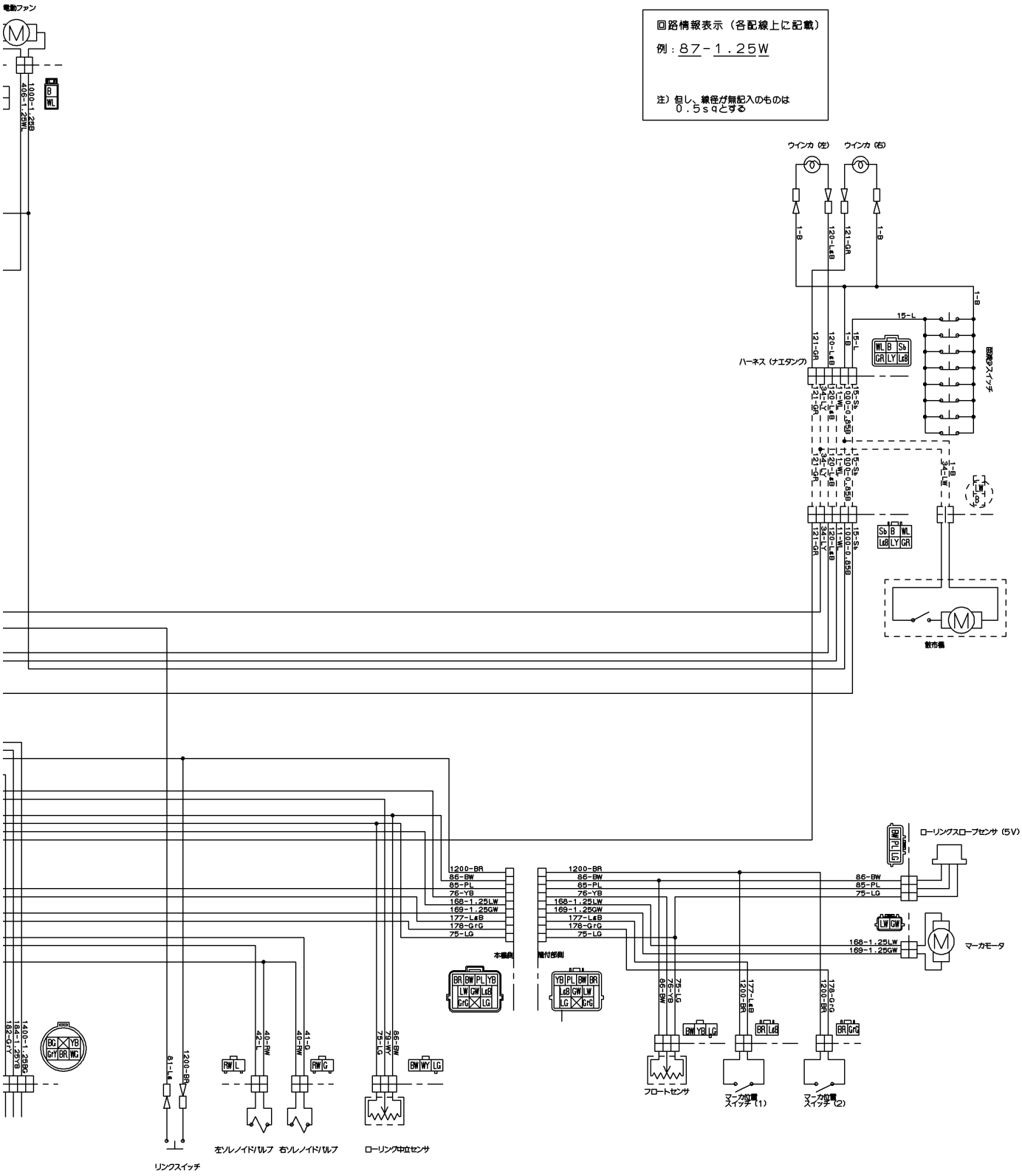

WIRING DIAGRAM(G TYPE EXCEPT F)(1/4)

(G TYPE)

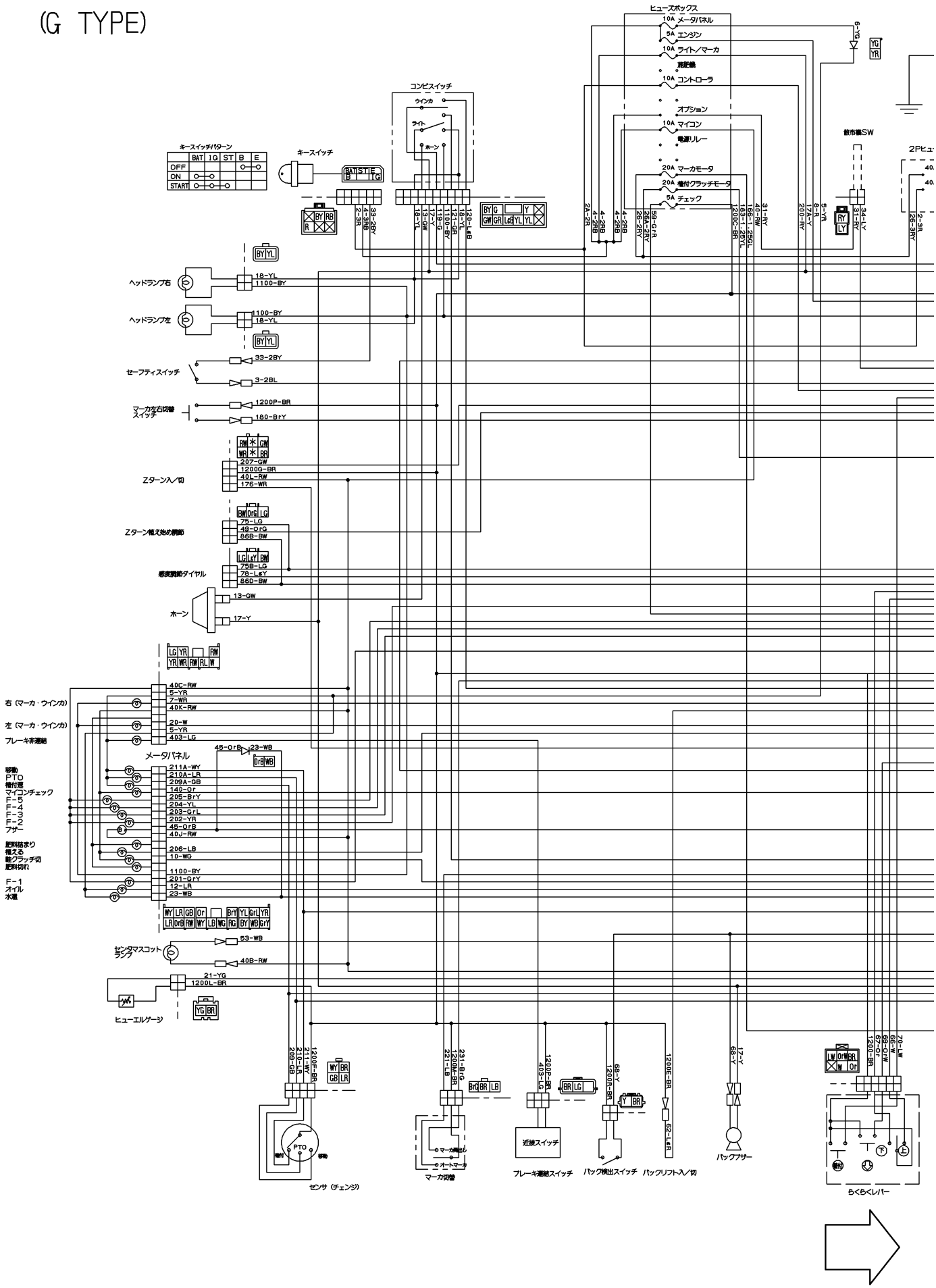

WIRING DIAGRAM(G TYPE EXCEPT F)(2/4)

(G TYPE)

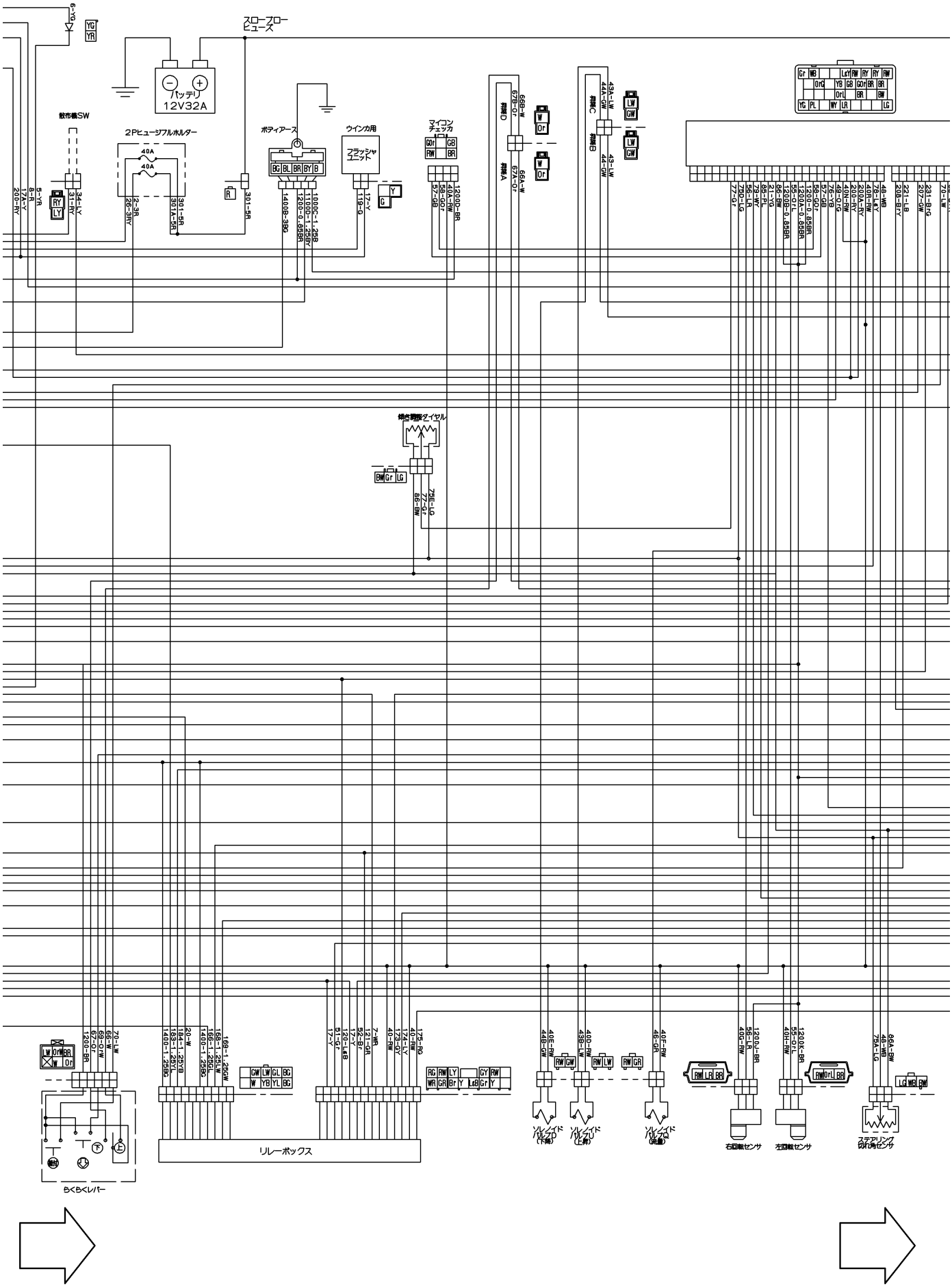

WIRING DIAGRAM(G TYPE EXCEPT F)(3/4)

(G TYPE)

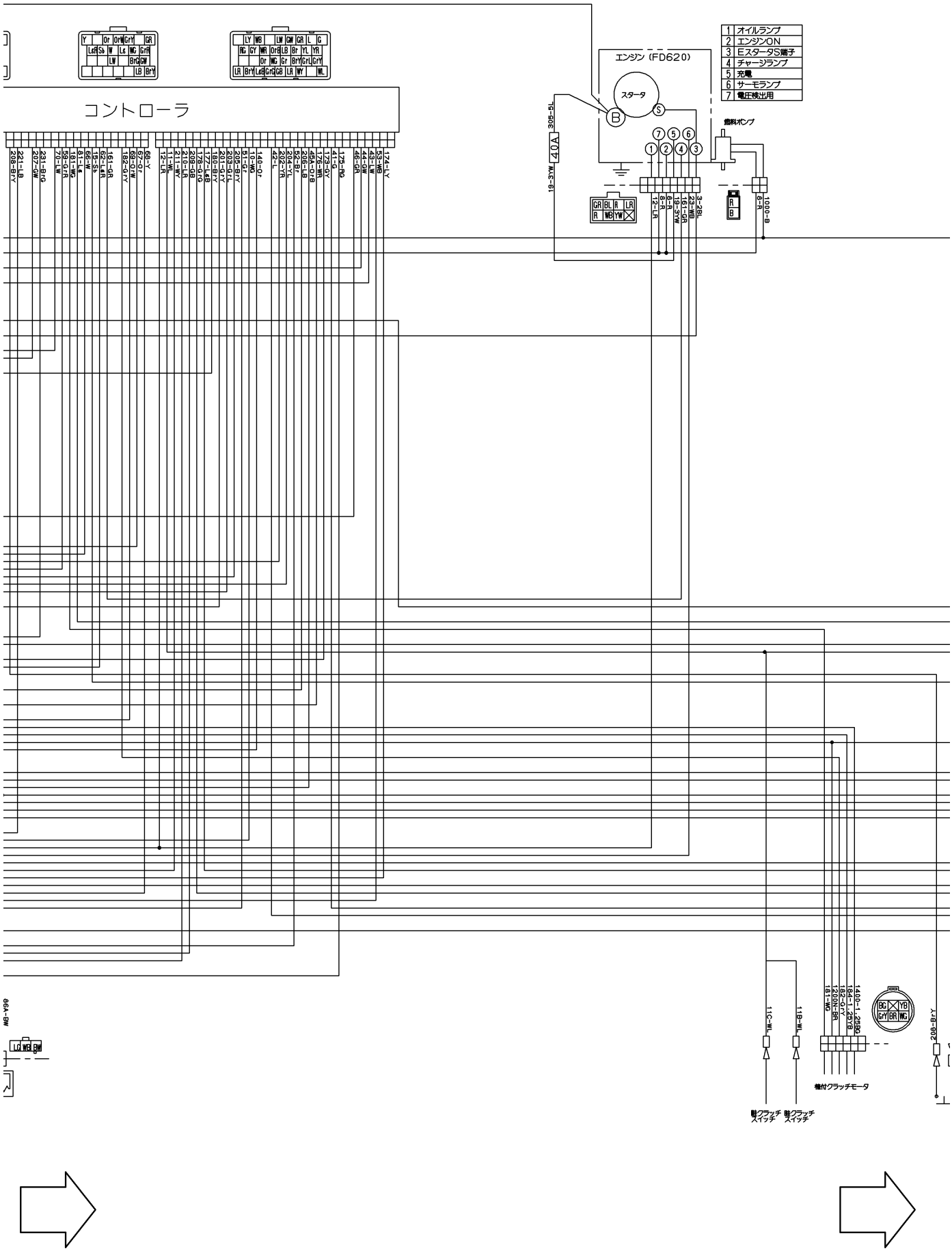

WIRING DIAGRAM(G TYPE EXCEPT F)(4/4)

(G TYPE)

配線色一覧表

記号	Br	R	Or	Y	G	L	V	Gr	W	B	Lg	P	Sb
色	茶	赤	橙	黄	緑	青	紫	灰	白	黒	若葉	桃	空色

回路情報表示（各配線上に記載）

例：87－1.25W

注）但し、線径が無記入のものは
0.5sqとする

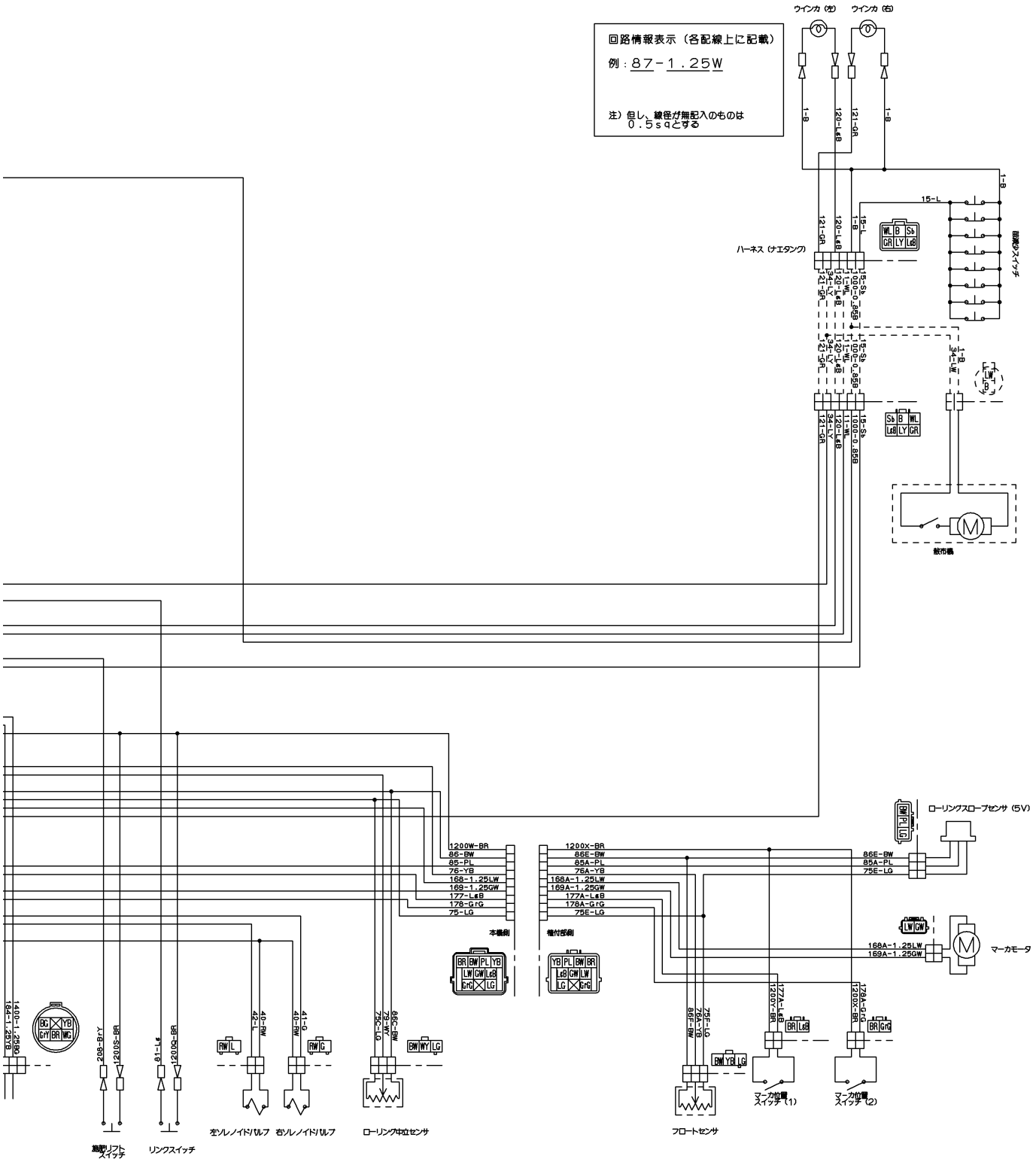

Part Code	Fig.	Key	Part Code	Fig.	Key	Part Code	Fig.	Key
1373-121-001-00	23	4	6209-610-009-00	5	4	6211-312-004-20	25	15
1729-202-001-00	20	14-B	6209-625-001-00	5	14-A	6211-321-022-00	9	38-A
3625-540-004-00	9	32		25	10	6211-322-002-00	9	39
3643-586-001-00	21	6	6209-625-002-00	9	5	6211-341-081-00	8	1
3659-301-260-10	7	5		25	12	6211-342-001-30	8	2
3817-401-001-00	9	8	6209-625-012-00	5	14	6211-361-008-10	7	1
	11	20	6209-630-002-10	24	6	6211-510-001-00	5	10
	17	8		25	21	6211-511-003-00	5	11
	17	13	6209-730-005-00	12	3	6211-511-004-00	5	12
	20	9		20	12	6211-540-001-00	6	1
6209-000-002-00	11	18	6209-730-006-00	15	4	6211-560-001-00	6	3
6209-000-004-10	5	2	6209-740-001-00	9	23	6211-599-001-10	5	13
6209-000-043-00	15	9	6209-740-005-00	5	17		6	2
6209-000-044-00	1	7	6209-749-001-20	5	15		6	4
6209-030-043-00	20	18	6209-788-001-00	5	29	6211-751-001-10	2	2
6209-044-001-00	20	26	6209-920-002-00	9	17	6211-760-053-00	5	31
6209-046-015-00	15	7		16	12	6211-760-053-10	5	31-A
6209-050-001-00	9	29		25	13	6211-766-009-00	5	32
6209-050-002-00	9	30	6209-940-004-00	11	14	6211-766-009-10	5	32-A
6209-300-014-00	1	8	6211-110-057-30	1	1	6211-777-007-30	10	1
6209-360-006-00	21	5	6211-141-029-20	1	6	6212-111-094-20	13	1
6209-360-018-00	21	3		25	3	6212-114-094-20	14	1
6209-360-028-20	2	6	6211-170-004-20	2	1	6212-116-094-20	14	3
6209-360-094-00	7	3	6211-173-003-00	2	3	6212-121-014-20	13	2
6209-409-001-00	9	15		25	4	6212-124-014-10	14	2
6209-409-003-00	11	17	6211-210-037-30	5	1	6212-126-014-10	14	4
6209-490-002-10	2	4	6211-210-037-40	5	1-A	6212-211-001-10	13	3
6209-500-003-00	9	13	6211-210-037-50	5	1-B	6212-230-004-10	13	5
	9	22	6211-210-037-60	5	1-C	6212-235-005-00	13	6
	25	22	6211-210-037-70	5	1-D	6212-271-016-00	13	7
6209-500-004-00	7	7	6211-210-037-80	5	1-E	6212-274-016-00	6	5
6209-572-003-00	2	5	6211-258-001-00	5	8	6212-276-016-00	6	6
	25	5		25	8	6212-310-009-40	15	1
6209-580-002-10	20	29	6211-258-002-00	5	9	6212-310-009-50	15	1-A
6209-587-001-00	13	4		25	9	6212-330-013-30	15	5
6209-600-003-00	7	6	6211-291-001-10	5	25	6212-330-095-00	15	5-A
6209-600-004-00	9	21	6211-292-001-20	5	26	6212-330-095-10	15	5-B
6209-605-004-10	1	3		25	11	6212-333-003-00	15	6
6209-605-007-00	5	5	6211-310-025-30	9	1	6212-371-035-10	15	8
	9	2	6211-310-025-40	9	1-A	6212-371-035-20	15	8-A
6209-605-007-10	5	5-A	6211-310-025-50	9	1-B	6212-371-073-00	15	8-B
	9	2-A	6211-311-048-10	9	33	6212-511-002-00	12	1
6209-610-001-10	5	3	6211-312-003-20	9	24	6212-521-008-00	15	3
6209-610-007-00	9	3		25	14	6212-522-010-00	12	2
6209-610-008-00	5	7	6211-312-004-20	9	34	6212-523-023-00	12	6

Numerical Index

Part Code	Fig.	Key	Part Code	Fig.	Key	Part Code	Fig.	Key
6212-524-002-30	20	11	6213-641-022-10	18	1	6215-345-017-00	26	23
6212-531-005-10	5	6	6213-669-021-00	18	3	6215-345-018-00	26	24
6212-535-001-00	12	4	6213-669-022-00	18	4	6215-345-019-00	26	25
6212-535-002-00	20	15	6213-671-052-00	18	5	6215-345-020-00	26	26
6212-551-028-00	11	1	6213-671-053-00	18	5-A	6215-345-021-00	26	27
6212-552-014-00	11	2	6213-674-006-20	23	2	6215-345-022-00	26	28
6212-561-001-10	11	3	6213-711-015-00	17	21	6215-345-023-00	26	29
6212-563-001-00	11	4	6213-711-018-00	17	21-A	6215-345-024-00	26	30
6212-565-001-00	11	5	6213-716-001-50	17	16	6215-345-025-00	26	31
6212-569-002-00	1	4	6213-716-001-60	17	16-A	6215-345-026-00	26	32
	25	2	6213-721-001-00	5	23	6215-345-027-00	26	33
6212-571-006-00	11	6	6213-729-013-10	17	14	6215-345-028-00	26	34
6212-575-002-00	11	7	6213-743-002-10	17	17	6215-345-029-00	26	35
6212-600-002-10	11	8		25	19	6215-345-030-00	26	36
6212-611-004-10	11	9	6214-111-011-20	3	1	6215-345-031-00	26	37
6212-616-002-00	11	16	6214-115-001-20	3	2	6215-345-032-00	26	38
6212-620-001-20	11	10		25	6	6215-345-033-00	26	39
6212-626-002-10	11	11	6214-141-008-20	4	1	6215-345-034-00	26	40
6212-628-004-00	11	12	6214-145-001-30	4	2	6215-345-035-00	26	41
6212-628-005-00	11	13		25	7	6215-345-036-00	26	42
6213-100-003-30	16	1	6215-300-036-10	19	1	6215-345-037-00	26	43
6213-111-001-30	16	2	6215-311-027-00	26	51	6215-345-038-00	26	44
6213-119-001-00	16	4	6215-315-002-00	19	3	6215-345-039-00	26	45
6213-129-003-00	16	3	6215-330-024-10	26	1	6215-345-040-00	26	46
6213-129-006-00	5	16	6215-331-008-00	26	2	6215-345-041-00	26	47
6213-140-002-10	16	6	6215-332-013-00	26	5	6215-345-042-00	26	48
6213-140-032-00	16	6-A	6215-339-001-00	26	6	6215-345-043-00	26	49
6213-149-001-00	16	8	6215-342-001-00	26	3	6215-359-001-00	19	2
6213-160-002-20	9	25	6215-343-001-00	26	4	6215-359-002-00	26	50
6213-161-001-20	9	26	6215-345-001-00	26	7	6215-411-125-00	21	2
6213-164-001-00	9	27	6215-345-002-00	26	8	6215-411-126-10	19	4
6213-240-002-10	16	13	6215-345-003-00	26	9	6215-411-127-00	19	5
6213-311-006-00	16	10	6215-345-004-00	26	10	6215-411-128-00	19	6
6213-319-001-00	5	24	6215-345-005-00	26	11	6215-412-004-00	21	1
6213-610-005-40	17	1	6215-345-006-00	26	12	6215-520-001-00	20	17
6213-610-005-50	17	1-A	6215-345-007-00	26	13	6215-526-004-00	20	19
6213-612-004-00	17	4	6215-345-008-00	26	14	6215-531-008-00	20	24
6213-613-002-10	17	3	6215-345-009-00	26	15	6215-541-001-10	20	20
6213-614-003-10	17	6	6215-345-010-00	26	16	6215-541-012-20	20	25
	25	17	6215-345-011-00	26	17	6215-541-016-40	22	2
6213-614-004-10	17	10	6215-345-012-00	26	18	6215-542-004-20	9	18
	25	18	6215-345-013-00	26	19	6215-542-005-10	9	20
6213-619-001-00	17	9	6215-345-014-00	26	20	6215-542-005-20	9	20-A
6213-619-003-00	17	5	6215-345-015-00	26	21	6215-542-006-00	20	22
6213-622-002-10	17	2	6215-345-016-00	26	22	6215-543-002-10	20	21

Part Code	Fig.	Key	Part Code	Fig.	Key	Part Code	Fig.	Key
6215-546-003-10	9	14	6219-732-017-00	24	4	6281-221-007-00	29	4
6215-548-029-00	22	1	6219-752-044-00	20	5	6281-222-012-00	29	1
6215-549-007-10	20	30	6219-752-045-00	20	4	6281-229-002-00	29	2
6215-549-012-00	20	34	6219-752-046-00	20	6	6281-229-003-00	29	3
6215-549-013-00	5	28	6219-752-047-00	20	7	6281-229-004-00	29	5
6215-600-103-10	20	1	6281-100-014-00	23	7	6281-229-006-00	29	8
6215-600-103-20	20	1-A	6281-111-009-00	28	1	6281-229-007-00	29	9
6215-600-103-30	20	1-B	6281-115-017-00	28	10	6281-229-008-00	29	10
6215-611-001-00	27	8-A	6281-115-018-00	28	11	6281-229-011-00	29	15
6215-611-017-00	27	8	6281-117-003-00	28	4	6281-229-012-00	29	19
6215-612-001-00	27	11	6281-118-007-00	28	3	6281-229-013-00	29	20
6215-619-009-00	20	3	6281-119-009-00	28	2	6281-229-014-00	29	21
	27	1	6281-121-010-00	28	5	6281-229-015-00	29	22
6215-619-010-00	20	2	6281-124-011-00	28	6	6281-229-016-00	29	23
	27	2	6281-127-003-00	28	19	6281-229-017-00	29	24
6215-619-022-00	27	10	6281-129-029-00	28	29	6281-229-018-00	29	25
6215-621-016-20	20	10	6281-129-030-00	28	28	6281-229-029-00	29	14
6215-622-001-00	27	14	6281-129-043-00	28	30	6281-229-032-00	29	6
6215-629-001-00	27	12	6281-129-058-00	28	9	6281-229-033-00	29	11
6215-629-002-00	27	13	6281-129-062-00	28	33	6281-271-002-00	29	26
6215-629-003-00	27	20	6281-129-064-00	28	7	6281-410-024-00	24	3
6215-629-004-00	27	21	6281-129-065-00	28	12	6281-410-026-00	24	3-A
6215-629-005-00	27	22	6281-129-066-00	28	13	6281-910-011-00	24	5
6215-629-006-00	27	23	6281-129-067-00	28	14	6281-971-001-10	24	1
6215-629-007-00	27	24	6281-129-068-00	28	15	6282-450-008-00	24	2
6215-629-008-00	27	25	6281-129-069-00	28	16	6287-810-035-00	25	1
6215-629-009-00	27	26	6281-129-070-00	28	17	6294-453-002-00	5	21
6215-629-010-00	27	27	6281-129-071-00	28	18	6511-321-083-00	9	38
6215-629-011-00	27	28	6281-129-072-00	28	21	6513-770-022-10	17	20
6215-629-012-00	27	29	6281-129-073-00	28	22	6901-910-612-00	12	5
6215-629-013-00	27	30	6281-129-074-00	28	23		20	16
6215-629-014-00	27	31	6281-129-075-00	28	24	6901-910-625-00	16	5
6215-629-015-00	27	32	6281-129-076-00	28	25	6901-911-020-00	8	3
6215-629-016-00	27	33	6281-129-077-00	28	26	6901-911-025-00	23	8
6215-631-019-00	27	9	6281-129-078-00	28	27	6902-050-816-00	9	35
6215-634-001-00	27	18	6281-129-079-00	28	34	6904-110-814-00	9	4
6215-635-001-00	27	16	6281-129-080-00	28	8	6904-110-818-00	5	19
6215-637-001-00	27	15	6281-151-014-00	28	20	6904-110-822-00	4	4
6215-639-004-00	27	17	6281-200-021-00	23	1		5	20
6215-639-005-00	27	19	6281-213-018-00	29	7		9	4-A
6215-641-006-00	27	7	6281-214-003-00	29	12	6904-110-840-00	5	18
6215-643-006-00	27	3	6281-214-004-00	29	13		17	11
6215-644-007-00	27	4	6281-215-001-00	29	17	6909-110-408-00	28	32
6215-649-002-00	27	6	6281-216-001-00	29	18	6909-150-508-00	28	31
6215-649-019-00	27	5	6281-217-002-00	29	16	6909-902-299-00	5	22

Numerical Index

Part Code	Fig.	Key	Part Code	Fig.	Key	Part Code	Fig.	Key
6909-906-105-10	16	11	V334-260-010-00	23	6			
6911-129-006-00	1	2	V341-120-008-00	9	16			
J061-114-024-00	7	4	V401-160-006-00	20	33			
J061-210-015-00	17	15		24	8			
J062-076-082-00	21	4	V401-160-008-00	9	41			
J062-087-093-00	21	7		9	41-A			
P117-303-003-00	9	19	V411-260-006-00	20	32			
V201-360-802-00	20	8	V523-101-001-80	15	2			
V210-560-601-20	12	5-A	V600-110-600-40	20	14			
	20	16-A	V600-110-620-30	20	13			
V210-560-602-50	16	5-A	V600-410-600-40	20	14-A			
V211-560-802-00	9	36	V682-200-000-60	1	5			
	9	42	V704-140-016-00	11	15			
V211-560-802-50	4	3	V705-140-012-00	9	28			
V220-540-601-60	24	7	V710-140-004-00	20	23			
V230-360-601-00	7	2	V720-101-900-80	20	28			
V230-360-601-20	5	27	V720-102-401-50	16	7			
	18	2		25	16			
V230-360-601-60	18	2-A	V723-102-005-50	17	22			
V231-360-801-60	9	9		25	20			
	16	9						
V231-360-802-00	3	3						
	17	12						
	17	18						
	23	3						
V231-360-802-50	9	37						
	17	23						
V231-360-803-00	9	12						
V231-360-804-00	3	4						
	17	24						
V231-360-804-50	9	10						
	17	7						
V231-360-805-00	11	19						
V231-360-805-50	9	7						
V231-360-807-50	9	11						
	17	19						
V231-360-808-50	9	6						
V233-361-002-00	10	2						
V233-361-007-00	23	5						
V301-260-006-00	5	30						
	9	31						
	20	31						
V302-260-006-00	20	27						
V304-260-008-00	9	40						
	9	40-A						

Part Code	Fig.	Key	Part Code	Fig.	Key	Part Code	Fig.	Key
1373-121-001-00	23	4	6209-610-008-00	5	7	6211-312-004-20	9	34
1729-202-001-00	20	14-B	6209-610-009-00	5	4		25	15
2182-104-520-00	23	1	6209-625-001-00	5	14-A	6211-321-022-00	9	38-A
3625-540-004-00	9	32		25	10	6211-322-002-00	9	39
3643-586-001-00	21	6	6209-625-002-00	9	5	6211-341-081-00	8	1
3659-301-260-10	7	5		25	12	6211-342-001-30	8	2
3817-401-001-00	9	8	6209-625-012-00	5	14	6211-361-008-10	7	1
	11	20	6209-630-002-10	24	6	6211-510-001-00	5	10
	17	8		25	21	6211-511-003-00	5	11
	17	13	6209-730-005-00	12	3	6211-511-004-00	5	12
	20	9		20	12	6211-540-001-00	6	1
6209-000-002-00	11	18	6209-730-006-00	15	4	6211-560-001-00	6	3
6209-000-004-10	5	2	6209-740-001-00	9	23	6211-599-001-10	5	13
6209-000-043-00	15	9	6209-740-005-00	5	17		6	2
6209-000-044-00	1	7	6209-749-001-20	5	15		6	4
6209-030-043-00	20	18	6209-788-001-00	5	29	6211-751-001-10	2	2
6209-044-001-00	20	26	6209-920-002-00	9	17	6211-760-053-00	5	31
6209-046-015-00	15	7		16	12	6211-760-053-10	5	31-A
6209-050-001-00	9	29		25	13	6211-766-009-00	5	32
6209-050-002-00	9	30	6209-940-004-00	11	14	6211-766-009-10	5	32-A
6209-300-014-00	1	8	6211-110-057-30	1	1	6211-777-007-30	10	1
6209-360-006-00	21	5	6211-141-029-20	1	6	6212-111-094-20	13	1
6209-360-018-00	21	3		25	3	6212-114-094-20	14	1
6209-360-028-20	2	6	6211-170-004-20	2	1	6212-116-094-20	14	3
6209-360-094-00	7	3	6211-173-003-00	2	3	6212-121-014-20	13	2
6209-409-001-00	9	15		25	4	6212-124-014-10	14	2
6209-409-003-00	11	17	6211-210-037-30	5	1	6212-126-014-10	14	4
6209-490-002-10	2	4	6211-210-037-40	5	1-A	6212-211-001-10	13	3
6209-500-003-00	9	13	6211-210-037-50	5	1-B	6212-230-004-10	13	5
	9	22	6211-210-037-60	5	1-C	6212-235-005-00	13	6
	25	22	6211-210-037-70	5	1-D	6212-271-016-00	13	7
6209-500-004-00	7	7	6211-210-037-80	5	1-E	6212-274-016-00	6	5
6209-572-003-00	2	5	6211-258-001-00	5	8	6212-276-016-00	6	6
	25	5		25	8	6212-310-009-40	15	1
6209-580-002-10	20	29	6211-258-002-00	5	9	6212-310-009-50	15	1-A
6209-587-001-00	13	4		25	9	6212-330-013-30	15	5
6209-600-003-00	7	6	6211-291-001-10	5	25	6212-330-095-00	15	5-A
6209-600-004-00	9	21	6211-292-001-20	5	26	6212-330-095-10	15	5-B
6209-605-004-10	1	3		25	11	6212-333-003-00	15	6
6209-605-007-00	5	5	6211-310-025-30	9	1	6212-371-035-10	15	8
	9	2	6211-310-025-40	9	1-A	6212-371-035-20	15	8-A
6209-605-007-10	5	5-A	6211-310-025-50	9	1-B	6212-371-073-00	15	8-B
	9	2-A	6211-311-048-10	9	33	6212-511-002-00	12	1
6209-610-001-10	5	3	6211-312-003-20	9	24	6212-521-008-00	15	3
6209-610-007-00	9	3		25	14	6212-522-010-00	12	2

Numerical Index

Part Code	Fig.	Key	Part Code	Fig.	Key	Part Code	Fig.	Key
6212-523-023-00	12	6	6213-622-002-10	17	2	6215-345-016-00	26	22
6212-524-002-30	20	11	6213-641-022-10	18	1	6215-345-017-00	26	23
6212-531-005-10	5	6	6213-669-021-00	18	3	6215-345-018-00	26	24
6212-535-001-00	12	4	6213-669-022-00	18	4	6215-345-019-00	26	25
6212-535-002-00	20	15	6213-671-052-00	18	5	6215-345-020-00	26	26
6212-551-028-00	11	1	6213-671-053-00	18	5-A	6215-345-021-00	26	27
6212-552-014-00	11	2	6213-674-012-20	23	2	6215-345-022-00	26	28
6212-561-001-10	11	3	6213-711-015-00	17	21	6215-345-023-00	26	29
6212-563-001-00	11	4	6213-711-018-00	17	21-A	6215-345-024-00	26	30
6212-565-001-00	11	5	6213-716-001-50	17	16	6215-345-025-00	26	31
6212-569-002-00	1	4	6213-716-001-60	17	16-A	6215-345-026-00	26	32
	25	2	6213-721-001-00	5	23	6215-345-027-00	26	33
6212-571-006-00	11	6	6213-729-013-10	17	14	6215-345-028-00	26	34
6212-575-002-00	11	7	6213-743-002-10	17	17	6215-345-029-00	26	35
6212-600-002-10	11	8		25	19	6215-345-030-00	26	36
6212-611-004-10	11	9	6214-111-011-20	3	1	6215-345-031-00	26	37
6212-616-002-00	11	16	6214-115-001-20	3	2	6215-345-032-00	26	38
6212-620-001-20	11	10		25	6	6215-345-033-00	26	39
6212-626-002-10	11	11	6214-141-008-20	4	1	6215-345-034-00	26	40
6212-628-004-00	11	12	6214-145-001-30	4	2	6215-345-035-00	26	41
6212-628-005-00	11	13		25	7	6215-345-036-00	26	42
6213-100-003-30	16	1	6215-300-036-10	19	1	6215-345-037-00	26	43
6213-111-001-30	16	2	6215-311-027-00	26	51	6215-345-038-00	26	44
6213-119-001-00	16	4	6215-315-002-00	19	3	6215-345-039-00	26	45
6213-129-003-00	16	3	6215-330-024-10	26	1	6215-345-040-00	26	46
6213-129-006-00	5	16	6215-331-008-00	26	2	6215-345-041-00	26	47
6213-140-002-10	16	6	6215-332-013-00	26	5	6215-345-042-00	26	48
6213-140-032-00	16	6-A	6215-339-001-00	26	6	6215-345-043-00	26	49
6213-149-001-00	16	8	6215-342-001-00	26	3	6215-359-001-00	19	2
6213-160-002-20	9	25	6215-343-001-00	26	4	6215-359-002-00	26	50
6213-161-001-20	9	26	6215-345-001-00	26	7	6215-411-125-00	21	2
6213-164-001-00	9	27	6215-345-002-00	26	8	6215-411-126-10	19	4
6213-240-002-10	16	13	6215-345-003-00	26	9	6215-411-127-00	19	5
6213-311-006-00	16	10	6215-345-004-00	26	10	6215-411-128-00	19	6
6213-319-001-00	5	24	6215-345-005-00	26	11	6215-412-004-00	21	1
6213-610-005-40	17	1	6215-345-006-00	26	12	6215-520-001-00	20	17
6213-610-005-50	17	1-A	6215-345-007-00	26	13	6215-526-004-00	20	19
6213-612-004-00	17	4	6215-345-008-00	26	14	6215-531-008-00	20	24
6213-613-002-10	17	3	6215-345-009-00	26	15	6215-541-001-10	20	20
6213-614-003-10	17	6	6215-345-010-00	26	16	6215-541-012-20	20	25
	25	17	6215-345-011-00	26	17	6215-541-016-40	22	2
6213-614-004-10	17	10	6215-345-012-00	26	18	6215-542-004-20	9	18
	25	18	6215-345-013-00	26	19	6215-542-005-10	9	20
6213-619-001-00	17	9	6215-345-014-00	26	20	6215-542-005-20	9	20-A
6213-619-003-00	17	5	6215-345-015-00	26	21	6215-542-006-00	20	22

Part Code	Fig.	Key	Part Code	Fig.	Key	Part Code	Fig.	Key
6215-543-002-10	20	21	6215-649-019-00	27	5	6294-453-002-00	5	21
6215-546-003-10	9	14	6219-732-017-00	24	4	6511-321-083-00	9	38
6215-548-029-00	22	1	6219-752-044-00	20	5	6513-770-022-10	17	20
6215-549-007-10	20	30	6219-752-045-00	20	4	6901-910-612-00	12	5
6215-549-012-00	20	34	6219-752-046-00	20	6		20	16
6215-549-013-00	5	28	6219-752-047-00	20	7	6901-910-625-00	16	5
6215-600-103-10	20	1	6281-100-014-00	23	7	6901-911-020-00	8	3
6215-600-103-20	20	1-A	6281-111-009-00	28	1	6901-911-025-00	23	8
6215-600-103-30	20	1-B	6281-115-017-00	28	10	6902-050-816-00	9	35
6215-611-001-00	27	8-A	6281-115-018-00	28	11	6904-110-814-00	9	4
6215-611-017-00	27	8	6281-117-003-00	28	4	6904-110-818-00	5	19
6215-612-001-00	27	11	6281-118-007-00	28	3	6904-110-822-00	4	4
6215-619-009-00	20	3	6281-119-009-00	28	2		5	20
	27	1	6281-121-010-00	28	5		9	4-A
6215-619-010-00	20	2	6281-124-011-00	28	6	6904-110-840-00	5	18
	27	2	6281-127-003-00	28	19		17	11
6215-619-022-00	27	10	6281-129-029-00	28	29	6909-110-408-00	28	32
6215-621-016-20	20	10	6281-129-030-00	28	28	6909-150-508-00	28	31
6215-622-001-00	27	14	6281-129-043-00	28	30	6909-902-299-00	5	22
6215-629-001-00	27	12	6281-129-058-00	28	9	6909-906-105-10	16	11
6215-629-002-00	27	13	6281-129-062-00	28	33	6911-129-006-00	1	2
6215-629-003-00	27	20	6281-129-064-00	28	7	J061-114-024-00	7	4
6215-629-004-00	27	21	6281-129-065-00	28	12	J061-210-015-00	17	15
6215-629-005-00	27	22	6281-129-066-00	28	13	J062-076-082-00	21	4
6215-629-006-00	27	23	6281-129-067-00	28	14	J062-087-093-00	21	7
6215-629-007-00	27	24	6281-129-068-00	28	15	P117-303-003-00	9	19
6215-629-008-00	27	25	6281-129-069-00	28	16	V201-360-802-00	20	8
6215-629-009-00	27	26	6281-129-070-00	28	17	V210-560-601-20	12	5-A
6215-629-010-00	27	27	6281-129-071-00	28	18		20	16-A
6215-629-011-00	27	28	6281-129-072-00	28	21	V210-560-602-50	16	5-A
6215-629-012-00	27	29	6281-129-073-00	28	22	V211-560-802-00	9	36
6215-629-013-00	27	30	6281-129-074-00	28	23		9	42
6215-629-014-00	27	31	6281-129-075-00	28	24	V211-560-802-50	4	3
6215-629-015-00	27	32	6281-129-076-00	28	25	V220-540-601-60	24	7
6215-629-016-00	27	33	6281-129-077-00	28	26	V230-360-601-00	7	2
6215-631-019-00	27	9	6281-129-078-00	28	27	V230-360-601-20	5	27
6215-634-001-00	27	18	6281-129-079-00	28	34		18	2
6215-635-001-00	27	16	6281-129-080-00	28	8	V230-360-601-60	18	2-A
6215-637-001-00	27	15	6281-151-014-00	28	20	V231-360-801-60	9	9
6215-639-004-00	27	17	6281-410-024-00	24	3		16	9
6215-639-005-00	27	19	6281-410-026-00	24	3-A	V231-360-802-00	3	3
6215-641-006-00	27	7	6281-910-011-00	24	5		17	12
6215-643-006-00	27	3	6281-971-001-10	24	1		17	18
6215-644-007-00	27	4	6282-450-008-00	24	2		23	3
6215-649-002-00	27	6	6287-810-035-00	25	1	V231-360-802-50	9	37

Numerical Index

6004-097-480-10

Part Code	Fig.	Key	Part Code	Fig. Key	Part Code	Fig. Key
V231-360-802-50	17	23				
V231-360-803-00	9	12				
V231-360-804-00	3	4				
	17	24				
V231-360-804-50	9	10				
	17	7				
V231-360-805-00	11	19				
V231-360-805-50	9	7				
V231-360-807-50	9	11				
	17	19				
V231-360-808-50	9	6				
V233-361-002-00	10	2				
V233-361-007-00	23	5				
V301-260-006-00	5	30				
	9	31				
	20	31				
V302-260-006-00	20	27				
V304-260-008-00	9	40				
	9	40-A				
V334-260-010-00	23	6				
V341-120-008-00	9	16				
V401-160-006-00	20	33				
	24	8				
V401-160-008-00	9	41				
	9	41-A				
V411-260-006-00	20	32				
V523-101-001-80	15	2				
V600-110-600-40	20	14				
V600-110-620-30	20	13				
V600-410-600-40	20	14-A				
V682-200-000-60	1	5				
V704-140-016-00	11	15				
V705-140-012-00	9	28				
V710-140-004-00	20	23				
V720-101-900-80	20	28				
V720-102-401-50	16	7				
	25	16				
V723-102-005-50	17	22				
	25	20				

Part Code	Fig.	Key	Part Code	Fig.	Key	Part Code	Fig.	Key
5110-042-107-XX	1	1	5130-292-109-XX	2	5	5160-202-140-XX	8	8
5110-082-139-XX	1	2	5130-812-085-XX	11	2	5160-252-005-XX	8	9
5110-086-033-XX	1	3	5130-912-068-XX	11	3	5160-302-067-XX	8	10
5110-092-024-XX	8	1	5130-AA0-520-XX	6	29	5160-312-066-XX	8	11
5110-092-566-XX	4	1	5130-AA0-612-XX	4	16	5160-352-053-XX	8	12
5110-092-766-XX	6	1		6	30	5160-352-058-XX	8	13
5110-092-769-XX	8	2	5130-AA0-614-XX	6	31	5160-412-249-XX	8	14
5110-093-028-XX	1	4	5130-AA0-616-XX	7	25	5160-412-259-XX	8	15
5110-112-253-XX	9	1	5130-AA0-620-XX	5	25	5160-602-201-XX	8	16
5110-112-254-XX	9	2		6	32	5160-732-098-XX	11	6
5110-121-084-XX	5	1		8	44	5160-732-222-XX	8	17
5110-132-161-XX	9	3	5130-AA0-625-XX	1	28	5161-152-126-XX	4	5
5110-132-207-XX	9	4	5130-AA0-630-XX	7	26	5161-262-146-XX	1	12
5110-222-081-XX	1	5	5130-AA0-645-XX	8	45	5161-262-237-XX	8	18
5110-222-082-XX	1	6	5130-AA0-816-XX	1	29	5161-422-069-XX	5	9
5110-472-057-9H	9	5		5	26	5161-462-235-XX	11	7
5110-472-125-XX	9	6	5130-AA0-830-XX	11	19	5161-462-241-XX	11	8
5110-482-039-XX	5	2	5130-AA0-835-XX	6	33	5161-542-053-XX	4	6
5110-532-070-XX	7	1	5130-AA0-850-XX	6	34	5161-542-054-XX	4	7
5110-552-002-XX	10	1	5130-AB0-812-XX	1	30	5161-712-075-XX	7	4
5110-552-007-9H	5	3	5130-BA0-620-XX	5	27	5161-712-097-XX	7	5
5110-602-079-XX	9	7	5130-BA0-625-XX	6	35	5187-AA0-520-XX	9	12
5110-602-084-XX	5	4	5130-BA0-865-XX	1	31	5210-392-059-XX	11	9
5110-602-087-XX	8	3	5130-CA0-645-XX	5	28	5210-402-052-XX	11	10
5110-602-088-XX	8	4	5130-CA0-665-XX	5	29	5210-662-084-XX	6	3
5110-602-089-XX	1	7	5130-CA0-675-XX	5	30	5210-802-054-XX	11	11
5110-602-449-XX	1	8	5130-CA0-860-XX	1	32	5211-192-160-XX	6	4
5110-602-450-XX	5	5	5130-CA0-870-XX	5	31	5211-212-094-XX	6	5
5110-602-451-XX	5	6	5131-072-097-XX	5	7	5211-302-060-XX	6	6
5110-612-118-XX	9	8	5131-072-296-XX	4	2	5211-632-132-XX	11	12
5110-612-119-XX	8	5	5131-162-057-XX	3	9	5211-882-009-XX	8	19
5110-612-199-XX	1	9	5131-682-131-XX	11	4	5211-932-194-XX	6	7
5110-652-118-XX	11	1	5131-832-419-XX	4	3	5214-AA0-414-XX	8	46
5120-042-115-XX	3	1	5132-362-163-XX	7	2	5214-AA0-510-XX	6	36
5120-052-093-XX	3	2	5132-362-164-XX	7	3	5214-AA0-512-XX	4	17
5120-092-067-XX	3	3	5132-516-068-XX	2	6	5215-120-329-HX	1	13
5120-112-056-XX	3	4	5132-516-069-XX	2	7	5220-AA0-510-XX	10	11
5120-162-056-XX	3	5	5132-712-054-XX	1	10	5225-AA0-414-XX	6	37
5120-202-059-XX	3	6	5140-242-113-XX	4	4	5260-312-082-XX	6	8
5120-322-064-XX	3	7	5140-242-205-XX	11	5	5260-312-083-XX	6	9
5120-442-239-XX	3	8	5140-242-292-XX	1	11	5270-102-122-XX	11	13
5130-012-169-XX	2	1	5140-832-051-XX	6	2	5270-102-181-XX	6	10
5130-021-013-XX	2	2	5140-912-102-XX	5	8	5270-102-234-XX	6	11
5130-086-025-XX	2	3	5150-032-851-XX	8	6	5270-342-058-XX	6	12
5130-256-008-XX	2	4	5160-142-075-XX	8	7	5311-AA0-600-XX	7	27

Numerical Index

Part Code	Fig.	Key	Part Code	Fig.	Key	Part Code	Fig.	Key
5311-BA0-600-XX	9	13	5590-512-114-XX	4	11	5920-420-14X-XX	4	12
5312-AA0-500-XX	7	28	5590-712-079-XX	1	16		5	20
5317-AA0-800-XX	11	20	5590-712-119-XX	10	4	5920-431-037-XX	1	19
5320-852-097-XX	11	14	5590-762-081-XX	8	25	5920-432-006-XX	8	35
5390-032-088-XX	7	6	5592-562-057-XX	5	17	5920-432-227-XX	1	20
5390-622-051-XX	5	10	5593-362-052-XX	5	18	5920-492-109-XX	3	14
5390-762-053-XX	8	20	5600-A13-00X-XX	4	18	5920-492-110-XX	1	21
5391-082-057-XX	3	10	5670-B15-07X-XX	5	33	5920-492-111-XX	5	21
5391-292-091-XX	7	7	5670-B20-10X-XX	1	33	5920-492-255-XX	1	22
5411-AA0-600-XX	7	29	5670-B20-11X-XX	4	19	5920-552-086-XX	4	13
5420-362-060-XX	7	8	5670-B30-25X-XX	4	20	5920-552-148-XX	8	36
5430-560-03X-XX	8	21	5701-Q05-100-0X	8	47	5920-592-011-XX	6	21
5430-782-055-XX	5	11	5920-022-087-XX	7	12		8	37
5461-DA0-600-XX	9	14	5920-022-254-XX	8	26	5920-632-432-XX	8	38
5461-DA0-800-XX	11	21	5920-022-269-XX	7	13	5920-642-137-XX	8	39
5480-J12-00X-XX	3	15	5920-022-277-XX	11	15	5920-662-099-XX	4	14
5490-156-268-XX	1	14	5920-042-142-XX	1	17	5920-702-112-XX	6	22
5490-191-055-XX	10	2	5920-091-109-XX	3	12	5920-721-195-XX	6	23
5490-442-066-XX	5	12	5920-092-080-XX	8	27	5920-721-237-XX	6	24
5490-542-056-XX	5	13	5920-092-081-XX	8	28	5920-812-009-XX	8	40
5490-631-056-XX	5	14	5920-092-273-XX	6	15	5920-812-077-XX	8	41
5490-652-071-XX	4	8	5920-092-308-XX	1	18	5920-932-002-XX	8	42
5490-652-072-XX	4	9	5920-092-381-XX	7	14	5921-412-122-XX	1	23
5490-702-791-YX	9	9	5920-151-137-XX	3	13	5921-431-336-XX	9	10
5490-782-082-XX	3	11	5920-151-143-XX	10	5	5921-432-135-XX	7	16
5491-032-162-XX	7	9	5920-151-339-XX	7	15	5921-432-148-XX	7	17
5491-102-093-XX	7	10	5920-152-146-XX	11	16	5921-442-052-XX	7	18
5491-132-178-XX	7	11	5920-152-147-XX	11	17	5921-452-056-XX	7	19
5491-192-130-XX	2	8	5920-152-167-XX	6	16	5921-452-125-XX	7	20
5491-202-299-XX	1	15	5920-222-231-XX	8	29	5921-452-132-XX	4	15
5491-212-247-XX	8	22	5920-222-245-XX	6	17	5921-502-230-XX	5	22
5491-212-248-XX	8	23	5920-271-568-XX	6	18	5921-502-231-XX	5	23
5491-232-083-XX	8	24	5920-272-003-XX	8	30	5921-502-285-XX	9	11
5510-232-175-XX	10	3	5920-272-004-XX	8	31	5921-512-067-XX	1	24
5510-A51-00X-XX	6	38	5920-272-025-XX	8	32	5921-512-068-XX	8	43
5520-052-122-XX	4	10	5920-272-096-XX	6	19	5921-522-091-XX	6	25
5551-A03-14X-XX	5	32	5920-332-067-XX	8	33	5921-522-092-XX	6	26
5551-A04-08X-XX	2	14	5920-332-081-XX	11	18	5921-530-009-XX	7	21
5560-312-419-XX	12	1	5920-360-21X-XX	2	10	5921-532-054-XX	2	12
5560-332-060-XX	12	2	5920-371-181-XX	5	19		2	13
5590-262-066-XX	6	13	5920-372-001-XX	10	6	5921-532-130-XX	1	25
5590-312-135-XX	6	14	5920-372-006-XX	6	20	5921-702-002-XX	1	26
5590-412-084-XX	5	15		8	34	5921-702-042-XX	10	8
5590-512-112-XX	2	9	5920-372-113-XX	10	7	5921-712-084-XX	6	27
5590-512-113-XX	5	16	5920-382-103-XX	2	11	5921-902-139-XX	10	9

Numerical Index

Part Code	Fig.	Key	Part Code	Fig.	Key	Part Code	Fig.	Key
5921-912-055-XX	10	10						
5921-922-054-XX	1	27						
5922-002-032-XX	6	28						
5922-002-035-XX	7	22						
5922-002-036-XX	7	23						
5922-002-044-XX	5	24						
5922-002-091-XX	7	24						

Numerical Index

Part Code	Fig.	Key
1110-401-002-00	13	11
	13	33
1135-709-002-00	112	16
1305-241-001-00	13	44
	166	6
	166	49
1308-230-002-00	120	32
1329-106-002-00	79	14
	80	14
	81	14
	82	14
	165	6
1342-402-006-00	61	22
	62	21
	63	24
	121	22
	147	9
	172	22
1365-121-005-00	18	9
	19	9
1370-405-003-00	130	6
1376-106-001-00	71	7
	72	6
1376-402-003-00	11	24
	61	16
	61	26
	72	31
	96	8
	97	8
	98	19
	99	17
	100	19
	101	15
	103	3
	110	50
	132	4
	163	2
	163	4
	164	9
	167	31
	170	9
	171	9
	173	10
1380-401-001-00	112	25
	113	24
1381-301-001-00	145	54
	146	37
1404-312-006-00	90	7
1416-509-007-00	150	37
1421-201-002-00	191	35
	192	35
1421-621-038-00	6	9
	12	17
	61	40
	62	38
	63	43
	98	21
	100	21
	163	10
1422-181-024-00	115	5
	115	10
	116	5
1425-621-004-00	4	22
1426-406-203-00	55	2
1426-621-038-00	145	82
	146	65
1444-621-242-00	147	2
1488-611-003-10	91	6
1491-623-222-00	105	2
	106	2
	107	2
1491-623-223-00	105	3
	106	3
	107	3
1524-221-003-00	120	5
1541-621-210-00	89	3
1544-104-205-00	5	19
1544-623-008-10	99	19
	101	17
1560-132-007-30	13	20
	18	21
	19	21
	56	43
	160	40
	160	46
1560-214-003-00	28	2-A
1560-666-004-00	99	16
	101	14
	117	4
1560-695-021-00	13	17
1560-695-021-00	18	18
	19	18
	160	41
	160	47
1560-695-022-00	13	19
	18	20
	19	20
	160	39
	160	45
1566-705-006-00	79	4
	80	4
	81	4
	82	4
	115	13
	116	16
	136	7
	136	17
	137	7
	137	17
	138	7
	138	17
	139	7
	139	17
	141	48
1575-123-002-00	88	16
1594-218-001-00	41	23-A
	42	22-A
	43	2
1600-619-210-10	89	2
1600-619-211-00	89	4
1600-619-212-00	89	5
1600-619-213-00	89	6
1600-619-214-00	89	7
1608-206-260-00	75	7
1614-670-281-00	96	3
	97	3
1614-690-202-00	98	16
	100	16
1617-244-004-00	41	12
	41	24
	42	12
	42	23
1650-102-202-10	6	2
1650-104-201-00	5	20
1650-509-280-00	75	8

Part Code	Fig.	Key
1650-509-280-00	76	7
1650-650-222-00	98	6
	99	6
	99	11
	100	6
	101	6
	101	10
1650-658-270-00	105	7
	106	7
1656-509-310-10	76	9
1670-658-015-00	108	4
1675-104-211-00	5	17
1675-104-213-00	5	18
1675-695-005-00	96	27
	96	46
	97	27
	97	46
1684-112-300-20	103	6
1689-901-008-00	176	6
1690-505-240-00	128	15
1690-652-210-00	105	6
	106	6
1716-506-001-00	61	25
	62	24
	63	29
1716-510-004-00	61	34
	62	32
	63	37
1716-680-200-10	97	12
1716-680-200-20	97	12-A
1716-680-290-00	105	4
	106	4
	107	4
1716-782-005-00	6	15
1716-901-016-00	155	7
	156	7
1719-608-012-10	96	29
	96	44
	97	29
	97	44
	163	33
1719-608-013-00	96	28
	97	28
1719-650-250-00	98	9
	98	13

Part Code	Fig.	Key
1719-650-250-00	99	10
	99	15
	100	9
	100	13
1719-730-002-00	5	7
	6	5
1728-104-210-00	5	16
1729-111-006-10	11	12
	12	10
1729-111-280-10	11	9
	12	6
1729-111-280-20	11	9-A
	12	6-A
1729-111-283-00	11	10
	12	7
1729-111-284-00	11	11
	12	8
1729-609-240-00	96	26
	96	45
	97	26
	97	45
1729-656-005-00	96	30
	96	30-A
	96	43
	97	30
	97	30-A
	97	43
	163	32
1729-662-340-00	38	29
	119	23
	128	8
1740-680-530-00	105	12
	106	12
	107	10
1740-680-530-20	105	12-A
	106	12-A
	107	10-A
2110-325-003-00	120	16
2110-441-007-10	119	8
2130-206-001-00	160	3
2130-407-003-00	56	41
	115	7
	116	7
	141	33
2130-525-014-00	166	12

Part Code	Fig.	Key
2130-525-014-00	172	8
2130-601-013-00	110	47
2130-601-018-00	72	30
	88	18
	150	31
2130-713-003-00	89	11
2130-732-205-00	110	13
	131	10
2130-736-202-00	114	2
	114	2-A
	114	13
	114	20
	114	20-A
2130-755-002-00	41	8
	42	8
2130-802-011-10	133	16
	134	16
2130-802-208-00	145	6
	146	2
	146	23
	146	25
2132-161-005-00	143	4-A
	144	4-A
2132-210-005-00	67	37
	67	44
	68	33
	68	40
2132-407-003-00	166	11
2132-513-001-00	13	41
2132-524-204-10	92	3
2132-544-200-00	147	1
2132-544-200-10	147	1-A
2132-545-008-00	132	8
	145	81
	146	64
2132-801-220-10	145	72
	146	55
2134-805-002-00	151	69
2137-305-011-20	121	8
2137-330-004-00	119	7
2137-450-003-00	142	3
2139-221-003-00	9	3
	51	7
2139-807-005-00	148	25
	148	32

Numerical Index

Part Code	Fig.	Key
2139-807-005-00	149	25
	149	32
2139-811-001-00	136	5
	136	14
	137	5
	137	14
	138	5
	138	14
	139	5
	139	14
2140-738-003-10	193	29
	194	28
	195	29
	196	28
2142-101-005-00	9	2
	117	9
2142-407-002-10	7	6
	15	32
	17	32
2142-736-203-10	143	3
	144	3
2142-736-214-00	193	7
	194	7
	195	7
	196	7
2142-736-221-00	193	17
	194	16
	195	17
	196	16
2142-736-224-00	193	6
	194	6
	195	6
	196	6
2142-736-235-00	193	24
	194	23
	195	24
	196	23
2142-736-236-00	120	1
	121	18
	131	25
	193	18
	195	18
2142-736-239-00	193	37
	194	36
	195	37

Part Code	Fig.	Key
2142-736-239-00	196	36
2142-736-271-00	193	12
	194	11
	195	12
	196	11
2144-117-002-00	73	15
	74	16
	93	3
	128	4
2144-201-005-00	43	6
	44	6
2144-301-005-10	55	3
2144-310-005-00	41	14
	42	14
2144-310-006-00	113	19
2144-337-002-00	120	25
2144-337-007-00	9	8
	15	25
	17	25
2144-337-230-00	56	39
2144-501-011-10	4	19
	11	17
	88	4
	88	10
	96	39
	97	39
	184	4
2144-519-003-00	56	36
	166	48
2144-542-220-00	105	1
	106	1
	107	1
2144-604-002-10	118	7
2144-701-003-30	131	6
2144-735-006-00	119	20
2144-736-221-00	193	11
	195	11
2144-738-216-00	193	15
	194	14
	195	15
	196	14
2144-805-056-00	88	15
2144-815-002-00	190	21
2144-820-006-30	72	11
2145-312-002-00	110	11

Part Code	Fig.	Key
2145-420-001-20	67	49
	68	45
	69	49
	70	45
	110	4
2145-542-230-00	64	6
	96	20
	97	20
	109	11
	163	26
	166	31
2145-542-232-10	64	7
	96	21
	97	21
	109	12
	163	27
	166	32
2145-586-200-11	88	11
2145-586-210-11	88	12
2145-586-220-01	88	17
2145-751-004-00	90	6
	120	27
2145-762-006-00	151	6
2145-762-007-00	121	19-A
2145-770-014-00	160	27
	160	30
	166	28
	169	31
	169	63
2145-770-015-00	173	13
2145-770-016-00	173	14
2145-770-214-00	169	11
	169	43
2145-771-203-10	197	5
	197	31
	197	33
	198	5
	198	27
2145-774-003-00	160	5
	160	9
2146-222-004-20	180	3
2146-640-001-60	127	1
2149-402-012-00	162	25
2149-806-018-00	121	33
2150-760-302-00	151	3

Part Code	Fig.	Key
2151-250-003-00	198	12-A
2151-420-008-00	145	71
	146	54
2151-420-011-00	141	25
2151-810-004-10	151	72
2157-201-004-10	54	7
2157-338-007-00	43	4
	44	4
2157-402-001-00	61	1
	62	1
	63	1
2157-419-005-00	112	39
	113	40
2157-508-230-00	148	14
	149	14
2157-510-071-10	115	12
	116	15
2157-510-710-10	115	11
	116	14
2161-103-001-00	7	2
2161-211-003-00	34	4
2161-214-003-00	27	7
	35	3
	71	16
	72	26
2161-222-003-00	56	37
	182	10
2161-226-220-30	180	7
2161-226-230-30	180	8
2161-302-005-00	29	8
2161-321-001-00	49	3
	49	7
2161-323-001-10	51	3
2161-330-004-00	54	13
2161-330-006-00	54	6
2161-331-001-10	55	15
2161-331-400-10	55	13
2161-331-401-10	55	14
2161-409-220-00	61	28
	62	26
2161-506-005-00	96	7
	96	49
	97	7
	97	49
2161-513-051-10	88	3

Part Code	Fig.	Key
2161-513-051-10	88	9
2161-513-810-00	89	8
2161-513-820-10	89	9
2161-513-850-10	89	1
2161-528-001-00	93	5
2161-532-202-00	95	2
2161-532-203-00	95	3
2161-603-006-00	118	25
2161-615-006-00	119	15
2161-615-012-00	109	16
	110	49
2161-615-014-00	20	5
	21	7
	110	34
2161-618-002-10	127	2
2161-618-003-00	55	5
2161-701-003-20	131	27
2161-701-005-00	131	22
2161-701-006-10	131	23
2161-711-012-00	136	6
	136	16
	137	6
	137	16
	138	6
	138	16
	139	6
	139	16
2161-735-005-00	56	57
	109	10
	109	21
	110	46
	162	26
2161-735-006-00	13	42
	56	13
	56	22
	56	28
	56	34
	56	45
	56	55
	119	4
	119	9
	119	13
	141	38
	162	15
2161-738-008-00	193	20

Part Code	Fig.	Key
2161-738-008-00	194	19
	195	20
	196	19
2161-738-222-00	193	27
	194	26
	195	27
	196	26
2161-738-611-00	193	16
	194	15
2161-739-611-00	195	16
	196	15
2161-831-003-10	145	17
	145	44
	146	6
	146	26
2161-831-007-00	145	26
	145	45
	146	16
	146	28
2161-831-201-50	145	2
2161-831-201-60	145	2-A
2161-831-209-00	145	12
2161-831-211-00	145	14
	145	24
	145	35
	145	41
	145	48
	146	14
	146	31
2161-833-004-00	148	5
	149	5
2161-834-001-10	150	9
	150	15
2161-834-001-30	150	9-A
	150	15-A
2161-834-002-00	150	1
2161-834-003-10	150	5
2161-834-004-00	145	7
2161-834-005-20	150	34
2161-834-007-00	145	77
	146	60
2161-834-012-00	145	76
	146	59
2161-834-013-10	150	8
2161-835-019-00	151	11

Numerical Index

Part Code	Fig.	Key	Part Code	Fig.	Key	Part Code	Fig.	Key
2161-835-021-00	151	10	2163-526-001-20	141	17	2186-101-320-10	4	14-A
2161-835-022-00	151	9	2163-526-006-00	88	7	2186-101-503-00	4	16
2161-835-028-00	151	60	2163-870-013-00	112	41	2186-101-503-10	4	16-A
2162-111-009-00	6	8		113	42	2186-320-001-00	116	10
2162-330-007-00	54	21	2170-617-002-00	127	3	2186-320-330-00	18	5
2162-415-250-10	56	30	2171-513-002-00	21	2		19	5
	65	7	2171-608-003-00	121	20	2186-336-003-00	56	27
2162-513-310-01	115	6	2171-634-001-10	123	1		56	33
2162-539-230-10	102	3		126	1		56	44
2162-801-009-10	145	69	2172-124-004-00	93	2	2186-401-001-00	59	3
	146	52		173	22	2186-409-033-00	61	24
2162-804-005-00	150	36	2172-333-011-00	182	9		62	23
2162-831-002-00	145	50	2172-333-012-10	182	2		63	28
	146	33	2172-333-018-00	182	5	2186-409-036-00	61	35
2162-831-003-00	145	19	2172-831-005-00	145	11		62	33
	145	51		145	37		63	38
	146	9		145	43	2186-414-002-00	166	58
	146	34	2172-831-203-30	145	10	2186-419-027-10	131	9
2162-831-004-10	145	22	2172-835-023-00	151	55	2186-421-031-00	120	15
	146	12	2174-635-003-00	123	6	2186-421-032-00	67	47
2162-831-032-00	145	60		124	6		68	43
	146	43		125	6		69	47
2162-831-033-00	145	20		126	6		70	43
	146	10	2175-509-230-00	96	32	2186-422-016-50	67	29
2162-831-201-40	145	3		97	32		68	25
2162-831-201-50	145	3-A	2175-509-231-00	96	33	2186-422-016-60	69	29
2162-831-202-40	145	4		97	33		70	25
2162-831-202-50	145	4-A	2175-524-201-00	92	2	2186-423-250-10	110	28
2162-831-250-00	145	65	2175-528-008-20	93	7	2186-436-007-00	55	4
	146	48	2178-421-003-00	55	25		128	6
2162-831-350-00	145	58	2178-631-013-00	14	13	2186-436-008-00	128	3
	146	41		15	13	2186-508-009-00	63	26
2162-831-360-00	145	59		16	13		79	9
	146	42		17	13		79	17
2162-831-370-00	145	67	2180-203-002-00	67	32		80	9
	146	50		68	28		80	17
2162-833-001-00	148	4		69	32		81	9
	149	4		70	28		81	16
2162-833-051-00	148	16	2180-211-001-00	121	14		82	9
	149	16	2183-526-001-10	141	13		82	17
2162-834-220-00	150	19	2183-613-003-00	122	5		85	7
2162-834-240-10	150	33		135	3	2186-508-017-00	71	17
2162-834-250-00	150	32	2183-778-013-00	18	15		72	24
2162-834-260-00	150	16		19	15	2186-513-440-00	88	6
2162-940-001-00	158	2	2186-101-320-00	4	14	2186-528-007-00	93	6

Part Code	Fig.	Key	Part Code	Fig.	Key	Part Code	Fig.	Key
2186-528-244-00	93	8	2186-738-059-00	196	43	2186-916-042-00	154	14
2186-533-002-00	110	41	2186-740-033-20	193	40	2186-916-043-00	153	13
2186-536-210-20	96	12		194	39		154	15
2186-536-211-00	96	13		195	40	2186-916-044-00	153	14
	97	13		196	39		154	16
2186-536-212-00	96	14	2186-801-001-00	145	23	2186-916-045-00	153	15
	97	14		146	13		154	17
2186-536-220-10	96	15	2186-805-001-10	151	31	2186-916-046-00	153	11
	97	15	2186-805-003-00	151	27		154	11
2186-536-223-00	96	19		169	79	2188-105-004-00	15	29
	97	19	2186-805-004-20	151	7		17	29
2186-536-253-00	96	16	2186-805-005-00	151	47	2188-105-005-00	5	15
	97	16	2186-805-008-00	151	23	2188-106-001-00	112	34
2186-536-254-00	96	17		151	48		113	35
	97	17	2186-805-011-00	132	11	2188-201-007-00	22	12
2186-536-255-00	96	18		151	24	2188-208-015-00	160	75
	97	18	2186-805-020-00	151	67		197	26
2186-537-110-00	56	18		151	68		198	23
2186-703-200-40	131	26	2186-805-026-00	145	79	2188-301-006-00	55	16
2186-703-200-60	131	26-A		146	62	2188-542-003-00	56	17
2186-703-220-01	131	29	2186-805-034-00	151	29	2188-542-202-00	56	11
2186-707-001-00	141	15	2186-805-041-10	151	53	2188-601-036-10	121	4
2186-707-006-00	141	16	2186-805-052-00	151	41	2188-601-039-00	121	7
2186-738-038-20	59	7	2186-806-001-10	152	1	2188-804-004-00	150	27
	110	27	2186-916-001-20	153	1	2190-131-008-00	14	14
	114	18		154	1		16	14
	114	24	2186-916-002-20	153	2	2190-131-009-00	14	15
	146	7		154	2		16	15
	146	27	2186-916-007-10	153	5	2190-226-220-20	37	1
	193	18-A		154	5	2190-226-220-30	37	1-A
	194	17	2186-916-009-20	153	6	2190-226-230-20	37	2
	195	18-A		154	6	2190-226-230-30	37	2-A
	196	17	2186-916-010-20	153	7	2190-316-200-10	45	1
2186-738-048-10	193	30		154	7	2190-316-200-20	45	1-A
	194	29	2186-916-010-30	153	7-A	2190-316-210-10	45	2
	195	30		154	7-A	2190-316-210-20	45	2-A
	196	29	2186-916-019-10	155	22	2190-409-230-00	61	17
2186-738-051-00	186	1		156	22		62	16
	187	1	2186-916-032-20	155	23		63	16
2186-738-052-10	186	2	2186-916-034-10	101	7	2190-436-001-00	128	2
2186-738-053-10	187	2	2186-916-035-10	155	24	2190-539-210-00	102	4
2186-738-055-00	185	1		156	23	2190-590-001-00	115	14
2186-738-059-00	193	44	2186-916-038-10	155	1		116	17
	194	43		156	1	2190-639-001-00	130	5
	195	44	2186-916-042-00	153	12	2190-801-002-00	145	18

Numerical Index

Part Code	Fig.	Key	Part Code	Fig.	Key	Part Code	Fig.	Key
2190-801-002-00	146	8	2194-518-310-00	56	50	2204-124-400-20	13	1-A
2190-801-240-00	145	53	2194-543-200-00	141	45	2204-131-011-00	14	2
	146	36	2194-608-006-00	121	34		15	2
2190-804-001-00	150	28	2194-608-007-00	121	27		16	2
2190-804-002-00	150	29	2194-701-010-00	131	17		16	2-A
2190-804-260-00	150	23-A		183	4		17	2
2190-804-270-00	150	24-A	2194-701-020-00	131	16		17	2-A
2190-805-012-00	151	33	2194-901-016-00	147	6		75	12
	151	46	2200-322-003-00	50	2		75	12-A
2190-805-013-00	151	21	2200-322-005-00	50	5	2204-132-002-10	18	11
2190-805-017-00	151	44	2200-322-006-00	50	6		19	11
2190-805-021-10	151	32	2200-322-007-00	50	4	2204-132-003-00	18	1
2190-805-023-00	151	45	2200-911-004-00	4	13	2204-132-009-10	18	16
2190-805-024-00	151	30	2201-201-002-00	34	4-A		19	16
2190-805-025-00	151	34		69	39	2204-132-260-10	18	17
2190-805-330-00	151	42		69	46		19	17
2190-916-004-00	155	25		70	35	2204-137-005-00	21	1
	156	24		70	42	2204-137-006-00	21	3
2190-916-006-20	155	27	2201-422-003-00	56	53	2204-137-200-00	20	2
2190-916-007-00	155	16	2204-101-001-20	4	8		21	4
	156	16	2204-101-004-10	4	7	2204-201-001-30	22	1
2190-916-008-00	155	17	2204-101-390-00	4	9	2204-201-001-40	22	1-A
	156	17	2204-101-390-10	4	9-A	2204-201-003-00	22	7
2190-916-009-00	155	26	2204-101-390-20	4	9-B	2204-202-200-10	23	1
	156	25	2204-103-350-00	7	1		24	1
2190-916-011-00	99	7	2204-105-240-20	9	5	2204-203-001-00	25	1
2194-106-002-00	9	9	2204-106-210-00	10	1		26	1
2194-117-001-00	162	27	2204-111-002-10	12	1	2204-203-003-10	25	3
2194-210-001-00	67	39	2204-111-005-20	12	14		26	3
	67	46	2204-111-005-40	12	14-A	2204-203-003-20	25	3-A
	68	35	2204-111-006-10	11	6		26	3-A
	68	42		12	5	2204-203-005-00	25	7
2194-301-009-00	76	3	2204-111-013-00	12	15		26	7
2194-321-001-00	49	4	2204-124-002-30	13	43	2204-203-006-00	25	8
2194-338-003-20	117	2	2204-124-003-10	13	40		26	8
2194-410-006-00	22	8	2204-124-004-10	13	30	2204-204-200-20	27	1
2194-419-070-00	67	14	2204-124-008-00	13	5	2204-204-210-10	27	8
	69	14	2204-124-015-30	13	8	2204-204-220-10	27	3
2194-508-005-00	87	9	2204-124-015-40	13	8-A	2204-207-005-00	28	8
2194-508-008-00	86	8	2204-124-220-00	13	16	2204-207-011-00	28	18
	87	8	2204-124-270-30	13	23		164	1
2194-508-009-00	86	9	2204-124-320-00	13	37	2204-207-012-20	28	9
	87	10	2204-124-331-00	13	2	2204-207-012-30	28	9-A
2194-508-220-10	86	7	2204-124-380-00	13	32	2204-208-002-10	29	6
	87	7	2204-124-400-10	13	1		30	6

Numerical Index

Part Code	Fig.	Key
2204-208-003-10	29	11
2204-208-003-30	29	11-A
2204-208-004-10	29	16
2204-208-004-20	30	16
2204-208-005-10	29	14
	30	14
2204-208-006-00	29	13
	30	13
2204-208-007-20	29	4
	30	4
2204-208-008-00	29	7
	29	18
2204-208-008-20	30	7
2204-208-009-10	29	17
2204-208-009-20	30	17
2204-208-013-00	29	3
	30	3
2204-208-017-00	29	1
2204-208-017-20	29	1-A
2204-208-017-40	30	1
2204-208-018-00	29	19
	30	19
2204-208-019-00	30	12
2204-208-035-00	30	18
2204-208-051-00	29	8-A
	30	8
2204-208-210-10	29	2
2204-208-210-40	29	2-A
2204-208-210-50	30	2
2204-212-001-00	34	2
2204-212-200-10	34	1
2204-212-200-20	34	1-A
2204-215-200-10	35	1
2204-222-001-00	36	3
	45	3
2204-222-700-40	182	12
2204-222-710-40	182	13
2204-302-003-00	38	7
2204-302-005-00	38	31
2204-302-006-00	38	26
2204-302-008-00	38	15
2204-302-025-00	38	20
2204-302-061-20	38	17
2204-302-200-10	38	16
2204-302-210-00	38	23
2204-302-220-10	38	1
2204-303-250-10	39	1
2204-304-011-00	40	4
2204-304-012-00	40	5
2204-304-210-40	40	6
2204-310-004-30	41	6
	42	6
2204-310-004-40	41	6-A
	42	6-A
2204-310-005-30	41	2
	42	2
2204-310-007-00	41	25
	42	24
2204-310-021-00	41	15-B
	42	15-B
2204-323-011-00	9	3-A
	51	7-A
2204-325-001-00	52	1
	53	1
2204-325-002-00	52	6
2204-330-004-00	54	10
2204-331-002-00	13	12
	13	25
	13	35
	55	9
2204-331-004-30	55	11
2204-331-200-10	55	8
2204-331-210-00	55	12
2204-331-210-10	55	12-A
2204-331-300-10	55	1
2204-331-300-30	55	1-A
2204-340-200-10	57	1
2204-343-001-00	58	3
2204-401-001-10	59	6
2204-401-200-00	59	1
2204-409-003-00	61	9
	62	9
	63	9
2204-409-004-20	61	10
	62	10
	63	10
2204-409-004-30	61	10-A
	63	10-A
2204-409-007-10	61	13
	62	13
2204-409-007-10	63	13
2204-409-008-10	61	5
	62	5
	63	5
2204-409-043-00	61	10-B
	63	10-B
2204-409-210-00	61	2
	62	2
	63	2
2204-411-001-00	64	15
2204-411-005-10	64	3
2204-411-009-10	64	11
2204-411-011-00	64	4
2204-414-230-00	65	9
2204-422-001-10	67	1
	68	1
	69	1
	70	1
2204-422-002-10	67	2
	68	2
	69	2
	70	2
2204-422-003-10	67	5
	69	5
2204-422-004-00	67	28
	68	24
2204-422-004-10	69	28
	70	24
2204-422-005-00	67	9
	68	10
2204-422-006-00	67	7
2204-422-006-10	69	7
2204-422-012-10	67	25
	68	21
	69	25
	70	21
2204-422-017-10	67	23
	68	8
	68	19
	69	23
	70	8
	70	19
2204-422-019-00	67	15
	69	15
2204-422-021-00	67	11

Numerical Index

Part Code	Fig.	Key
2204-422-021-00	68	12
	69	11
	70	12
2204-422-023-20	71	10
	72	8
2204-422-027-00	68	6
	70	6
2204-422-056-10	67	21
	68	17
	69	21
	70	17
2204-422-068-10	67	27
	68	23
2204-422-069-10	67	22
	68	18
2204-422-074-10	67	16
	69	16
2204-422-078-10	71	5
	72	4
2204-422-083-10	72	20
2204-422-084-00	71	3
	72	3
2204-422-084-10	71	3-A
	72	3-A
2204-422-085-00	71	4
	72	9
2204-422-085-10	71	4-A
	72	9-A
2204-422-095-10	72	23
2204-422-095-20	72	23-A
2204-422-200-20	67	34
	68	30
	69	34
	70	30
2204-422-220-10	71	1
2204-422-260-20	67	10
	68	11
	69	10
	70	11
2204-422-330-20	67	40
	68	36
	69	40
	70	36
2204-422-730-30	71	12
	72	13

Part Code	Fig.	Key
2204-422-760-40	71	11
	72	12
2204-422-840-30	72	21
2204-435-001-00	75	6
2204-435-006-00	75	2
2204-440-001-00	76	5
2204-440-300-00	76	1
2204-440-300-10	76	1-A
2204-440-310-00	76	2
2204-501-005-00	79	5
	80	5
	81	5
	82	5
2204-501-006-10	77	4
2204-501-007-20	77	7
2204-501-200-00	77	1
2204-508-001-00	79	1
	80	1
	81	1
	82	1
2204-508-003-00	79	11
	79	28
	80	11
	80	18
	80	24
	81	11
	81	27
	82	26
2204-508-003-10	79	11-A
	79	28-A
	80	11-A
	80	18-A
	80	24-A
	81	11-A
	81	27-A
	82	11
	82	26-A
2204-508-005-00	79	12
	80	12
	81	12
	82	12
2204-508-009-00	79	16
	82	16
2204-508-021-00	79	2
	80	2

Part Code	Fig.	Key
2204-508-021-00	81	2
	82	2
2204-508-022-00	79	3
	80	3
	81	3
	82	3
2204-508-201-20	80	10
2204-508-201-30	80	10-A
2204-510-005-00	85	5
2204-512-003-10	86	14
	87	5
2204-512-005-00	87	1
2204-512-009-00	87	14
2204-514-003-00	90	9
2204-514-210-00	90	5
2204-524-200-00	92	1
2204-524-300-00	92	1-A
2204-532-200-00	95	1
2204-536-001-00	96	40
	97	40
2204-536-004-00	96	9
	97	9
2204-536-209-00	96	6
	97	6
2204-536-551-00	96	38
	97	38
2204-537-002-00	38	27
	66	7
	73	20
	74	21
	98	20
	98	20-A
	99	18
	99	18-A
	100	20
	100	20-A
	101	16
	101	16-A
	102	2
	103	2
	117	3
	117	3-A
2204-537-202-00	98	4
	99	4
	100	4

Part Code	Fig.	Key	Part Code	Fig.	Key	Part Code	Fig.	Key
2204-537-202-00	101	4	2204-581-270-00	110	2	2204-608-006-00	121	22-A
2204-537-220-20	98	10	2204-582-001-00	113	15	2204-608-007-00	120	33-A
	99	12	2204-582-002-10	111	5	2204-608-012-20	121	20-A
	100	10	2204-582-003-00	111	6	2204-608-013-00	121	16-A
	101	11	2204-582-009-00	114	4	2204-608-015-20	121	15-A
2204-537-501-00	98	8		114	22	2204-608-015-30	121	15-B
	99	9	2204-582-011-00	111	30	2204-608-015-40	121	15-C
	100	8	2204-582-012-00	111	29	2204-608-016-00	121	8-A
	101	9	2204-582-013-00	111	18	2204-608-021-00	121	27-A
2204-541-002-00	104	6	2204-582-015-00	111	31	2204-608-021-10	121	27-B
2204-541-003-00	104	7		111	45	2204-608-022-00	121	9
2204-541-004-10	104	2	2204-582-016-00	111	19	2204-608-027-00	121	21-A
2204-541-200-00	104	4	2204-582-023-20	111	1	2204-608-028-00	121	25-A
2204-541-220-10	104	1	2204-582-023-30	111	1-A	2204-608-033-00	121	7-A
2204-542-200-00	105	9	2204-582-026-20	111	4	2204-614-002-00	122	2
	106	9	2204-582-028-10	111	38	2204-616-005-00	124	1
	107	7	2204-582-350-40	111	20		125	1
2204-545-007-10	108	3	2204-582-360-40	111	21	2204-616-200-00	125	5
2204-545-500-00	108	5	2204-583-005-00	112	42		126	5
2204-556-001-00	109	6		113	43	2204-618-004-10	141	41
2204-556-003-00	109	5	2204-583-015-00	112	30	2204-619-230-10	129	5
2204-556-061-00	63	25		113	31	2204-619-310-00	129	1
2204-556-210-00	109	3	2204-583-016-00	112	19	2204-701-025-10	118	4
2204-556-210-10	109	3-A	2204-589-002-00	114	11		120	3
2204-556-220-00	109	4	2204-589-003-00	114	12		131	7
2204-556-220-10	109	4-A	2204-589-004-10	114	6	2204-705-015-10	133	12
2204-556-230-00	109	9	2204-589-300-20	114	1		134	12
2204-556-240-00	109	8	2204-589-300-30	114	1-A	2204-705-017-00	133	13
2204-556-250-50	109	1	2204-589-320-20	114	19		134	13
2204-556-250-70	109	1-A	2204-589-320-30	114	19-A	2204-706-011-00	135	6
2204-556-410-00	109	18	2204-603-013-10	118	30	2204-706-270-00	135	5
2204-556-560-00	109	20	2204-603-013-20	118	30-A	2204-710-007-10	138	1
2204-557-009-00	133	11	2204-605-003-00	119	25		139	1
	134	11	2204-605-007-00	119	2	2204-710-012-10	137	8
2204-581-003-10	110	20	2204-605-009-10	119	5		138	8
2204-581-005-00	110	29	2204-605-009-20	119	5-A	2204-710-014-10	136	8
2204-581-014-10	110	19	2204-605-018-00	119	15-A		139	8
2204-581-027-20	110	44	2204-605-200-00	119	14	2204-710-015-00	138	10
2204-581-035-00	110	8	2204-605-210-30	119	1		139	10
2204-581-038-00	110	21	2204-605-220-10	119	11	2204-710-015-10	136	10
2204-581-046-00	110	12	2204-607-003-10	120	2		137	10
2204-581-046-10	110	12-A	2204-607-021-00	120	6	2204-710-016-00	138	11
2204-581-049-00	110	4-A	2204-607-022-00	120	37		139	11
2204-581-230-30	110	1	2204-607-032-00	120	13	2204-710-016-10	136	11
2204-581-230-40	110	1-A	2204-608-003-00	121	16		137	11

Numerical Index

Part Code	Fig.	Key
2204-710-021-00	184	2
2204-710-022-00	184	3
2204-710-200-10	138	2
	139	2
2204-710-210-10	138	3
	139	3
2204-710-260-00	138	12
	139	12
2204-711-002-00	141	29
2204-711-003-00	141	30
2204-711-011-00	141	31
2204-711-018-10	141	39
2204-711-022-00	141	10
2204-711-023-00	141	11
2204-711-024-00	142	6
2204-711-025-10	141	47
2204-711-025-20	141	47-A
2204-711-025-30	141	47-B
2204-711-027-00	141	12
2204-711-033-20	141	49
2204-711-200-40	141	18
2204-711-230-10	141	27
2204-738-001-00	194	38
	196	38
2204-738-059-00	193	41
	194	40
	195	41
	196	40
2204-738-080-10	158	1
	159	1
2204-738-240-00	193	28
	195	28
2204-738-240-20	193	28-A
	194	27
	195	28-A
	196	27
2204-738-273-00	193	4
	194	4
2204-738-274-00	193	8
	194	8
	195	8
	196	8
2204-738-275-10	193	9
2204-738-275-20	193	9-A
	194	9

Part Code	Fig.	Key
2204-738-276-00	193	10
	195	10
2204-738-277-00	193	10-A
	194	10
2204-738-282-00	193	2
2204-738-282-10	193	2-A
2204-738-304-10	193	25
	194	24
	195	25
	196	24
2204-738-307-00	193	19
	194	18
2204-738-312-00	193	42
	194	41
	195	42
	196	41
2204-738-313-00	193	50
	194	49
	195	50
	196	49
2204-738-317-00	193	47
	194	46
	195	47
	196	46
2204-738-318-10	193	38
	194	37
	195	38
	196	37
2204-738-319-00	193	48
	194	47
	195	48
	196	47
2204-738-323-00	193	51
	194	50
	195	51
	196	50
2204-738-325-00	193	49
	194	48
	195	49
	196	48
2204-738-340-00	193	1
	194	1
2204-738-400-20	143	1
2204-738-400-80	143	1-A
2204-738-410-20	193	21

Part Code	Fig.	Key
2204-738-410-50	193	21-A
2204-738-410-60	194	20
2204-738-411-00	193	39
	195	39
2204-738-412-00	193	23
	195	23
2204-738-412-10	194	22
	196	22
2204-738-413-10	193	36
	194	35
	195	36
	196	35
2204-738-414-00	193	33
	194	32
	195	33
	196	32
2204-738-440-00	143	1-B
2204-739-273-00	195	4
	196	4
2204-739-275-10	195	9
2204-739-275-20	195	9-A
	196	9
2204-739-277-00	195	10-A
	196	10
2204-739-282-00	195	2
2204-739-282-10	195	2-A
2204-739-307-00	195	19
	196	18
2204-739-340-00	195	1
	196	1
2204-739-400-20	144	1
2204-739-400-80	144	1-A
2204-739-410-20	195	21
2204-739-410-50	195	21-A
2204-739-410-60	196	20
2204-739-440-00	144	1-B
2204-740-001-00	188	1
2204-801-005-00	145	29
	146	19
2204-801-201-00	145	34
2204-801-202-00	145	40
2204-801-220-00	145	15
	146	3
2204-803-015-10	148	36
	149	36

Part Code	Fig.	Key	Part Code	Fig.	Key	Part Code	Fig.	Key
2204-803-015-20	149	36-A	2204-916-003-00	154	9	2213-101-500-00	3	16
2204-803-016-10	148	37	2204-916-004-00	96	10	2213-101-601-00	6	7
2204-803-016-20	149	37		97	10	2213-101-602-00	6	10
2204-803-024-00	149	43	2204-916-005-00	96	11	2213-101-602-10	6	10-A
2204-803-025-00	148	42		97	11	2213-102-001-10	6	14
	149	42	2204-916-006-00	96	36	2213-102-002-00	5	12
2204-803-031-00	148	29	2204-916-007-00	155	9	2213-102-005-00	5	23
	149	29		156	9	2213-102-031-00	4	18
2204-803-034-00	148	22	2204-916-008-10	155	10	2213-102-031-10	4	18-A
	149	22		156	10	2213-102-052-00	5	38
2204-803-035-00	148	23	2204-916-010-00	155	12	2213-102-240-00	6	4
	149	23		156	12	2213-102-240-10	6	4-A
2204-803-037-10	148	24	2204-916-011-00	155	11	2213-102-300-00	6	1
	149	24		156	11	2213-102-400-00	5	1
2204-803-200-00	148	20	2204-916-012-00	155	20	2213-102-402-00	5	2
	149	20		156	20	2213-102-403-00	5	3
2204-803-350-00	149	38	2204-916-013-00	155	21	2213-102-404-00	5	4
2204-804-400-00	150	22-A		156	21	2213-103-001-10	5	37
2204-805-001-00	151	4	2204-916-014-00	13	4	2213-103-200-20	5	5
2204-805-003-20	151	2	2204-916-017-00	155	15	2213-103-210-10	5	6
2204-805-005-10	151	36		156	15	2213-103-220-00	5	35
2204-805-007-00	151	17	2204-916-020-00	153	4	2213-105-001-00	8	1
2204-805-008-00	151	12		154	4	2213-105-005-00	9	1
2204-805-009-00	151	28	2209-531-220-00	56	49	2213-105-011-00	8	1-A
2204-805-016-00	151	66	2212-408-002-10	64	16	2213-111-002-10	11	20
2204-805-018-00	151	62	2213-101-001-10	3	1	2213-111-004-00	12	12
2204-805-020-00	151	71	2213-101-002-10	3	2	2213-111-004-20	12	12-A
2204-805-025-00	151	8		3	2-A	2213-111-008-00	11	1
2204-805-064-00	151	13	2213-101-004-00	5	10	2213-111-009-00	11	18
2204-805-069-00	151	15	2213-101-004-10	5	10-A	2213-111-011-00	11	14
2204-805-200-00	151	1	2213-101-005-00	5	11	2213-111-012-00	11	7
2204-805-210-00	151	16	2213-101-005-20	5	11-A	2213-111-021-00	11	23
2204-805-240-00	151	57	2213-101-006-00	5	21	2213-111-021-10	11	23-A
2204-805-510-10	151	61	2213-101-007-10	3	20	2213-111-023-00	12	15-A
2204-805-660-00	151	14	2213-101-015-10	3	24	2213-111-300-00	11	3
2204-834-002-00	150	1-A	2213-101-016-00	3	26	2213-111-300-10	11	3-A
2204-912-005-00	155	3	2213-101-017-00	3	3		12	2
2204-912-006-00	155	4	2213-101-018-00	1	2	2213-124-001-00	13	34
2204-912-007-00	155	5		2	2	2213-124-006-00	13	27
	156	5	2213-101-023-00	3	27	2213-124-310-10	13	14
2204-912-008-00	155	6	2213-101-026-00	3	28	2213-124-380-00	13	10
	156	6	2213-101-027-00	4	20	2213-131-001-00	17	12
2204-912-010-10	155	8	2213-101-210-00	1	1	2213-131-002-00	17	18
	156	8		2	1	2213-131-004-00	14	12
2204-916-003-00	153	9	2213-101-250-00	4	6		16	12

Numerical Index

Part Code	Fig.	Key	Part Code	Fig.	Key	Part Code	Fig.	Key
2213-131-006-00	17	14	2213-137-210-20	20	9-B	2213-310-001-20	41	1-A
2213-131-006-10	15	14		21	11-B		42	1-A
	17	14-A	2213-201-012-00	22	2	2213-310-001-30	41	1-B
2213-131-007-00	14	20	2213-201-012-40	22	2-A		42	1-B
	16	20	2213-201-012-50	22	2-B	2213-310-003-10	41	21
2213-131-008-00	17	31	2213-202-002-20	23	5		42	20
2213-131-009-00	15	21	2213-202-003-20	24	5	2213-312-001-00	43	5
	17	21	2213-203-005-20	25	2		44	5
2213-131-011-00	17	23	2213-203-006-20	26	2	2213-312-002-20	41	19
2213-131-012-00	15	23	2213-204-200-00	27	5		42	18
	17	23-A	2213-207-001-00	28	12	2213-312-003-20	41	20
2213-131-021-00	15	12	2213-207-001-20	28	12-A		42	19
	17	12-A	2213-207-002-10	28	1	2213-312-007-20	41	22
2213-131-022-10	15	18	2213-207-003-00	28	5	2213-312-008-20	42	21
	17	18-A	2213-207-004-00	28	7	2213-312-013-00	43	6-A
2213-131-200-10	17	24	2213-207-004-10	28	7-A		44	6-A
2213-131-400-00	15	31	2213-207-005-00	28	6	2213-312-200-10	44	1
	17	31-A	2213-207-021-00	28	1-B	2213-312-250-20	43	1
2213-131-520-00	15	24	2213-207-200-10	28	4	2213-317-001-00	46	1
	17	24-A	2213-207-200-20	28	4-A	2213-317-002-10	46	2
2213-132-001-10	18	8	2213-207-200-30	28	4-B	2213-320-002-00	58	7
2213-132-001-20	18	8-A	2213-207-200-40	28	4-C	2213-320-004-00	166	26
	19	8	2213-207-200-50	28	4-D	2213-320-200-80	48	1-A
2213-132-003-00	19	1	2213-208-003-10	30	10	2213-320-270-10	48	1
2213-132-200-10	18	4	2213-209-220-00	31	1	2213-320-280-00	47	1
2213-132-200-20	18	4-A	2213-209-220-10	31	1-A	2213-320-280-20	47	1-A
	19	4	2213-209-230-00	32	1	2213-320-280-30	47	1-B
2213-132-270-10	18	7	2213-209-230-10	32	1-A	2213-320-320-00	48	10
2213-132-270-30	18	7-A	2213-209-520-00	31	3	2213-320-320-10	48	10-A
	19	7	2213-209-530-00	32	3	2213-320-350-80	47	5
2213-137-001-00	20	1	2213-211-001-00	33	1		48	5
2213-137-003-00	20	6	2213-211-001-10	33	1-A	2213-320-380-10	58	5
	21	8	2213-211-002-00	31	6	2213-320-380-20	58	5-A
2213-137-004-00	20	7		32	6	2213-320-390-20	58	1
	21	9		33	7	2213-320-390-30	58	1-A
2213-137-005-00	20	8	2213-211-003-00	33	5	2213-320-420-40	47	5-A
	21	10	2213-212-001-10	34	2-A		48	5-A
2213-137-005-10	20	8-A	2213-215-210-00	35	4	2213-320-520-00	48	8
	21	10-A	2213-222-220-00	36	1	2213-320-520-50	48	8-A
2213-137-005-20	20	8-B	2213-222-220-10	36	1-A	2213-320-520-60	48	8-B
	21	10-B	2213-222-230-00	36	2	2213-320-600-20	47	8
2213-137-210-00	20	9	2213-222-230-10	36	2-A	2213-320-600-80	47	8-A
	21	11	2213-304-200-20	40	1	2213-320-600-90	47	8-B
2213-137-210-10	20	9-A	2213-310-001-00	41	1	2213-321-310-10	49	1
	21	11-A		42	1	2213-321-310-20	49	1-A

Part Code	Fig.	Key	Part Code	Fig.	Key	Part Code	Fig.	Key
2213-321-320-10	49	5	2213-409-001-10	61	14	2213-422-007-00	73	13
2213-321-320-20	49	5-A		62	14		74	14
2213-322-001-00	50	1-A	2213-409-004-00	61	29	2213-422-008-00	73	16
2213-322-200-00	50	1		62	27		74	17
2213-323-300-20	51	1		63	32	2213-422-011-00	73	19
2213-323-300-40	51	1-A	2213-409-005-10	61	20		74	20
2213-330-002-00	54	1		62	19	2213-422-012-10	73	7
2213-330-004-00	54	5	2213-409-006-10	61	19		74	7
2213-330-005-00	54	9		62	18	2213-422-013-10	72	28
2213-330-006-00	54	5-A		63	21	2213-422-015-00	68	52
2213-330-051-00	54	2	2213-409-007-10	61	7		70	52
2213-330-052-00	54	8		62	7	2213-422-017-00	67	8
2213-330-220-00	54	15		63	7		69	8
2213-330-230-10	54	18	2213-409-008-10	61	8	2213-422-018-00	69	9
2213-331-001-00	55	20		62	8		70	10
2213-331-001-10	55	20-A		63	8	2213-422-019-00	69	27
2213-331-002-10	55	27	2213-409-009-00	61	23		70	23
2213-331-003-00	55	28		62	22	2213-422-021-00	69	22
2213-331-310-30	55	17		63	27		70	18
2213-331-310-90	55	17-A	2213-409-012-00	61	11	2213-422-022-00	69	37
2213-331-320-00	55	17-B		62	11		69	44
2213-331-320-10	55	17-C		63	11		70	33
2213-331-400-10	55	24	2213-409-061-10	63	18		70	40
2213-336-001-00	56	7	2213-409-062-00	63	22	2213-422-041-00	67	20
2213-336-003-10	56	58	2213-409-063-00	63	14		68	16
2213-336-004-00	56	59	2213-409-300-00	63	17		69	20
2213-336-005-00	56	5	2213-411-001-00	64	12		70	16
	56	16	2213-411-006-00	64	13	2213-422-200-00	67	50
	56	47	2213-411-200-00	64	14		68	46
2213-336-007-00	56	56	2213-411-220-00	64	1		69	50
2213-336-200-00	56	1	2213-414-210-00	65	5		70	46
2213-336-210-00	56	15	2213-414-210-10	65	5-A	2213-422-220-00	67	53
2213-336-220-10	56	46	2213-414-240-00	65	7-A		68	49
2213-336-240-00	56	51	2213-414-300-20	65	1	2213-422-220-10	69	53
2213-336-250-00	56	38	2213-414-300-50	65	1-A		70	49
2213-336-260-10	56	40	2213-414-350-00	65	1-B	2213-422-250-10	73	8
2213-336-270-20	56	25	2213-415-003-00	66	4		74	9
2213-336-280-00	56	35	2213-415-200-00	66	2	2213-422-250-20	73	8-A
2213-336-290-00	56	29	2213-415-200-10	66	2-A		74	9-A
2213-336-310-20	56	24	2213-415-350-40	66	1	2213-422-260-10	73	2
2213-336-320-00	56	32	2213-415-350-50	66	1-A		74	2
2213-336-340-00	56	2	2213-422-001-00	73	4	2213-422-290-00	73	14
2213-407-005-00	60	2		74	4		74	15
2213-407-200-40	60	1	2213-422-002-00	73	18	2213-422-290-10	73	14-A
2213-407-200-50	60	1-A		74	19		74	15-A

Numerical Index

Part Code	Fig.	Key	Part Code	Fig.	Key	Part Code	Fig.	Key
2213-422-340-10	72	25	2213-508-400-80	79	21-A	2213-528-003-00	93	1
2213-422-350-10	72	1		81	20-A	2213-536-002-10	96	41
2213-422-350-20	72	1-A		82	19-A		97	41
2213-422-610-20	73	1	2213-508-610-10	79	30	2213-536-005-00	96	48
2213-422-610-30	73	1-A		80	26		97	48
2213-422-610-40	73	1-B		82	28	2213-536-210-00	96	2
2213-422-630-20	74	1	2213-508-620-10	79	31		97	2
2213-422-630-30	74	1-A		81	29	2213-536-300-00	96	1
2213-422-820-00	72	17		82	29		97	1
2213-507-001-00	78	1	2213-510-002-00	84	1	2213-537-102-00	98	18
2213-508-004-00	79	12-A	2213-510-004-00	85	3		100	18
	79	29	2213-510-005-00	85	6	2213-537-120-00	98	14
	80	12-A	2213-510-008-00	83	1		100	14
	80	25	2213-510-220-00	84	6	2213-537-120-10	98	14-A
	81	12-A	2213-510-220-10	84	6-A		100	14-A
	81	28	2213-510-230-10	84	3	2213-537-121-00	98	17
	82	12-A	2213-510-310-20	83	3		100	17
	82	27	2213-510-400-10	85	1	2213-537-800-00	98	1
2213-508-005-00	79	18	2213-512-003-00	86	4	2213-537-800-50	98	1-A
	81	17		87	2	2213-537-801-00	98	5
2213-508-006-00	80	16	2213-512-003-10	86	4-A		100	5
2213-508-009-00	79	33		87	2-A	2213-537-830-10	99	1
	81	31	2213-512-006-00	86	1	2213-537-830-40	99	1-A
2213-508-251-10	79	10	2213-512-009-00	86	10	2213-537-831-00	99	5
	81	10	2213-512-011-00	86	2		101	5
	82	10	2213-512-012-00	86	3	2213-537-850-00	100	1
2213-508-251-20	79	10-A	2213-512-016-00	86	2-A	2213-537-850-30	100	1-A
	81	10-A	2213-513-020-00	88	23	2213-537-850-40	100	1-B
	82	10-A	2213-513-520-00	88	1	2213-537-880-20	101	1
2213-508-251-30	79	10-B	2213-513-520-10	88	1-A	2213-537-880-50	101	1-A
	81	10-B	2213-513-530-00	88	2	2213-539-200-00	102	1
	82	10-B	2213-513-530-10	88	2-A	2213-541-200-10	103	1
2213-508-300-60	79	20	2213-513-610-00	88	22	2213-545-001-00	128	9
	81	19	2213-513-660-00	88	19	2213-545-300-20	108	1
	82	18	2213-513-670-00	88	20	2213-545-300-50	108	1-A
2213-508-300-80	79	20-A	2213-514-200-30	90	12	2213-545-300-60	108	1-B
	81	19-A	2213-514-200-40	90	12-A	2213-545-300-70	108	1-C
	82	18-A	2213-514-290-01	90	13	2213-545-300-80	108	1-D
2213-508-320-30	80	19	2213-514-520-10	90	1	2213-556-001-00	109	22
	81	21	2213-514-530-10	90	2	2213-556-210-10	109	17
2213-508-330-30	79	22	2213-517-002-00	91	8	2213-581-004-10	110	7
	82	20	2213-517-003-00	91	4	2213-581-004-20	110	7-A
2213-508-400-60	79	21	2213-517-003-10	91	4-A	2213-581-013-10	110	18
	81	20	2213-517-200-00	91	1	2213-581-015-10	110	15
	82	19	2213-517-201-00	91	2	2213-581-019-00	110	17

Part Code	Fig.	Key	Part Code	Fig.	Key	Part Code	Fig.	Key
2213-581-022-10	110	25	2213-583-220-20	112	24	2213-605-300-00	119	10
2213-581-022-20	110	25-A		113	23	2213-607-001-00	120	23
2213-581-200-00	110	2-A	2213-583-240-00	113	2	2213-607-031-00	120	18
2213-581-280-00	110	35	2213-583-240-10	112	2	2213-607-032-00	120	30
2213-581-280-10	110	35-A	2213-583-250-00	113	3	2213-607-035-00	120	8
2213-581-290-10	110	38	2213-583-250-10	112	3	2213-607-036-00	120	14
2213-582-001-00	112	15	2213-583-270-00	113	38	2213-607-037-00	120	19
	113	15-A	2213-583-270-30	112	37	2213-607-038-00	120	20
2213-582-005-10	111	7	2213-583-300-10	112	14	2213-607-039-00	120	17
2213-582-005-20	111	7-A		113	14	2213-607-041-00	120	9
2213-582-006-00	112	23	2213-583-310-10	112	27	2213-607-041-10	120	9-A
2213-582-012-00	111	4-A		113	26	2213-607-042-00	120	10
2213-582-021-20	111	2	2213-583-390-00	113	34	2213-607-042-20	120	10-A
2213-582-021-30	111	2-A	2213-583-390-10	112	33	2213-607-043-10	120	31
2213-582-022-20	111	3	2213-586-200-00	88	8	2213-607-043-20	120	31-A
2213-582-022-30	111	3-A	2213-589-200-00	114	1-B	2213-607-044-00	120	28
2213-582-023-10	111	41	2213-589-250-00	114	19-B	2213-607-045-00	120	29
2213-582-024-00	111	42	2213-590-002-00	116	11	2213-607-051-00	183	2
2213-582-031-00	111	12	2213-590-200-30	115	1	2213-607-052-00	183	3
2213-582-032-00	111	8	2213-590-210-10	115	2	2213-607-210-00	120	11
2213-582-032-10	111	8-A	2213-590-260-10	116	6	2213-607-230-10	120	24
2213-582-240-10	111	33	2213-590-260-20	116	6-A	2213-607-230-20	120	24-A
2213-582-240-20	111	33-A	2213-590-270-00	116	1	2213-607-910-00	183	1
2213-582-250-20	111	14	2213-590-280-00	116	2	2213-608-002-00	121	1
2213-582-260-10	111	32	2213-601-003-00	117	5	2213-608-002-10	121	1-A
2213-582-260-30	111	32-A	2213-601-004-00	128	13	2213-608-003-10	121	15
2213-582-310-20	111	11	2213-601-300-20	117	1	2213-608-006-00	121	11
2213-582-310-30	111	11-A	2213-603-001-00	118	1	2213-608-007-00	121	24
2213-582-330-10	111	36	2213-603-001-10	118	1-A	2213-608-029-00	121	35
2213-582-330-20	111	36-A	2213-603-011-10	118	18	2213-608-072-00	121	2
2213-582-350-20	111	16	2213-603-011-20	118	18-A	2213-614-200-00	122	1
2213-582-360-10	111	35	2213-603-012-20	118	21	2213-614-230-00	122	4
2213-582-360-30	111	35-A	2213-603-012-40	118	21-A	2213-616-200-00	123	2
2213-582-370-10	111	46	2213-603-013-10	118	33		124	2
2213-582-370-20	111	46-A	2213-603-013-20	118	33-A		125	2
2213-583-001-00	112	29	2213-603-017-10	118	19		126	2
	113	30	2213-603-200-10	118	15	2213-616-210-00	123	5
2213-583-011-00	112	11	2213-603-240-00	118	26		124	5
	113	11	2213-603-250-00	118	36	2213-619-360-00	130	9
2213-583-012-00	112	9	2213-603-250-10	118	36-A	2213-619-380-00	130	1
	113	9	2213-603-320-00	118	2	2213-619-390-00	130	2
2213-583-200-10	113	1	2213-603-350-00	118	40	2213-619-420-00	129	3
2213-583-200-20	112	1	2213-603-350-10	118	40-A	2213-701-001-10	131	34
2213-583-210-10	112	13	2213-604-001-00	118	8	2213-701-002-00	131	1
	113	13	2213-605-200-00	119	6	2213-701-003-10	131	33

Numerical Index

Part Code	Fig.	Key	Part Code	Fig.	Key	Part Code	Fig.	Key
2213-701-004-00	131	19	2213-711-260-10	142	1	2213-801-340-10	146	22
2213-701-005-00	131	21	2213-711-260-20	142	1-A	2213-801-340-20	146	22-A
2213-701-019-00	131	2	2213-711-270-10	142	2	2213-801-340-30	146	22-B
2213-701-019-10	131	2-A	2213-711-270-20	142	2-A	2213-801-360-10	146	24
2213-701-022-10	131	20	2213-711-300-00	141	36	2213-801-360-20	146	24-A
2213-701-023-00	131	13	2213-711-310-10	141	37	2213-801-360-30	146	24-B
2213-701-024-00	131	12	2213-711-380-20	141	1	2213-801-740-00	146	3-A
2213-701-024-10	131	12-A	2213-711-380-30	141	1-A	2213-802-230-00	147	5
2213-703-210-00	132	1	2213-711-390-20	141	2	2213-803-001-00	148	30
2213-703-210-10	132	1-A	2213-711-390-30	141	2-A	2213-803-001-10	149	30
2213-705-200-20	133	1	2213-713-200-10	142	7	2213-803-002-00	148	31
2213-705-200-30	133	1-A	2213-738-005-00	194	53	2213-803-002-10	149	31
	134	1	2213-738-271-00	194	2	2213-803-005-00	148	38
2213-705-210-10	133	2	2213-738-301-00	193	22	2213-803-006-10	148	6
	134	2	2213-738-301-10	193	22-A		149	6
2213-705-220-10	133	3		194	21	2213-803-007-10	148	7
	134	3	2213-738-303-00	193	31		149	7
2213-705-230-20	133	4		194	30	2213-803-009-00	148	28
2213-705-230-30	133	4-A		195	31		149	28
	134	4		196	30	2213-803-009-10	149	28-A
2213-705-320-30	133	8	2213-739-005-00	196	53	2213-803-210-10	148	2
	134	8	2213-739-271-00	196	2		149	2
2213-705-320-40	134	8-A	2213-739-301-00	195	22	2213-803-230-10	148	3
2213-705-420-40	133	15	2213-739-301-10	195	22-A		149	3
2213-705-420-60	134	15		196	21	2213-803-240-00	148	1
2213-706-200-00	135	1	2213-801-005-00	132	5		149	1
2213-706-200-10	135	1-A	2213-801-006-00	132	3	2213-803-250-00	148	27
2213-706-240-00	135	2	2213-801-007-00	132	6		149	27
2213-710-220-00	136	2	2213-801-008-00	132	7	2213-804-007-00	150	13
	137	2	2213-801-014-00	132	9	2213-804-200-00	150	11
2213-710-230-00	136	3	2213-801-071-00	146	4	2213-804-210-00	150	12
	137	3	2213-801-200-00	145	1	2213-804-220-00	150	38
2213-710-240-00	136	12	2213-801-200-10	145	1-A	2213-804-260-00	150	23
	137	12	2213-801-210-00	145	5	2213-804-270-00	150	24
2213-710-300-00	140	1	2213-801-230-00	145	8	2213-804-300-00	150	11-A
	140	1-A	2213-801-240-00	145	9	2213-804-300-10	150	11-B
2213-710-310-00	140	5	2213-801-250-00	145	32	2213-804-310-00	150	12-A
2213-710-800-00	184	1	2213-801-250-10	145	32-A	2213-804-310-10	150	12-B
2213-711-002-00	141	9	2213-801-260-00	145	33	2213-804-320-00	150	38-A
2213-711-006-00	141	8	2213-801-270-00	145	38	2213-804-450-00	150	22
2213-711-011-00	141	5	2213-801-270-10	145	38-A	2213-805-001-00	151	5
2213-711-210-10	141	20	2213-801-280-00	145	39	2213-805-014-00	151	22
2213-711-210-20	141	20-A	2213-801-310-10	146	1	2213-805-017-00	151	19
2213-711-220-10	141	21	2213-801-310-30	146	1-A	2213-805-018-00	151	20
2213-711-220-20	141	21-A	2213-801-310-40	146	1-B	2213-805-019-10	151	58

Part Code	Fig.	Key	Part Code	Fig.	Key	Part Code	Fig.	Key
2213-805-210-00	151	18	2221-325-001-00	53	6	3505-704-003-00	139	15
2213-805-240-00	151	56	2500-907-017-00	12	9	3517-205-007-00	141	32
2213-805-280-20	151	51	2505-111-003-00	98	24	3526-704-001-00	112	6
2213-805-280-30	151	51-A		99	21		113	6
2213-805-290-20	151	52		100	24	3533-201-003-00	29	5
2213-805-290-30	151	52-A	2513-801-053-00	141	42		30	5
2213-805-350-00	151	66-A	2515-665-210-00	96	5	3533-306-001-00	148	10
2213-805-370-00	151	1-A		97	5		149	10
2213-912-002-00	156	2	2703-501-006-00	193	32	3533-901-012-00	77	2
2213-912-008-00	155	2		194	31	3560-202-021-00	141	22
2213-912-042-00	156	3		195	32	3560-203-002-00	18	12
2213-912-043-00	156	4		196	31		19	12
2213-916-001-00	153	8	2703-501-008-00	193	34	3560-203-004-00	56	8
	154	8		194	33	3560-503-302-00	4	12
2213-916-002-00	153	3		195	34		56	9
	154	3		196	33		61	39
2213-916-003-00	153	10	2798-102-002-00	90	10		62	37
	154	10	3207-301-016-00	79	8		63	42
2213-916-004-00	155	18		80	8		86	11
	156	18		81	8		87	11
2213-916-005-00	156	19		82	8		110	33
2213-916-006-00	154	13		85	8		130	7
2213-916-007-00	96	42	3256-702-004-00	150	6		141	14
	97	42		150	39		151	38
2213-916-008-00	155	19		166	53		162	19
2213-916-011-00	157	1	3505-411-210-00	131	18	3567-401-002-00	71	8
2213-916-012-00	157	2	3505-604-002-00	118	14		72	10
2213-916-013-00	97	36	3505-704-003-00	55	26	3610-201-005-00	119	3
2213-916-014-00	153	16		91	7	3610-490-006-00	166	7
	154	18		109	7	3612-631-001-00	62	40
2213-916-015-00	154	19		112	7		128	17
2213-916-025-00	155	13		112	32		170	7
	156	13		113	7		171	7
2213-916-037-10	155	14		113	33	3621-211-002-00	9	6
	156	14		123	7		17	28
2213-916-039-00	96	37		124	7	3623-150-003-10	3	7
	97	37		125	7	3623-150-004-10	3	9
2213-916-060-00	155	28		126	7	3623-263-001-00	98	22
2218-207-002-10	28	1-A		136	9		100	22
2218-608-004-00	121	25		136	15	3625-151-001-00	112	35
2218-608-005-00	121	26		137	9		113	36
2218-701-001-00	131	1-A		137	15	3625-540-004-00	68	3
2218-710-001-10	136	1		138	9		70	3
	137	1		138	15	3632-360-036-00	132	10
2220-101-003-00	3	20-A		139	9	3640-260-200-30	5	9

Numerical Index

Part Code	Fig.	Key
3640-260-200-30	103	7
	104	5
	132	2
3646-703-001-00	15	28
	17	28-A
3650-106-006-00	15	30
	17	30
3650-201-006-00	6	12
	55	7
	55	23
	58	4
	62	39
	63	44
	110	45
3650-262-202-00	98	11
	99	13
	100	11
	101	12
3650-270-214-00	96	4
	97	4
3652-273-002-00	96	31
	96	47
	97	31
	97	47
	163	31
3656-221-001-10	56	3
3656-302-009-10	3	8
	3	8-A
3659-215-003-00	13	24
	112	38
	113	39
3659-301-001-00	3	17
3676-352-002-00	22	11
3676-374-320-00	61	28-A
	63	31
3679-260-003-00	103	4
3680-155-004-00	141	3
3737-172-010-00	102	5
3737-172-011-00	14	11
	15	11
	16	11
	17	11
	41	17
	41	17-A
	42	17

Part Code	Fig.	Key
3737-172-011-00	42	17-A
3737-211-007-00	31	8
	32	8
	38	6
	68	14
	70	14
3740-314-017-00	52	7
	53	7
	140	4
	143	4
	144	4
3750-231-013-00	29	12
	143	2
	144	2
3750-251-023-00	114	17
	118	6
	118	9
	120	33
3768-185-022-10	61	27
	62	25
	63	30
3801-272-004-00	77	3
3801-272-300-00	96	34
	97	34
3801-272-302-00	96	35
	97	35
3805-301-320-00	5	25
3805-301-321-00	5	29
3805-354-280-00	59	4
3807-836-350-00	94	1
3807-836-400-00	94	2
3821-262-202-00	98	2
	99	2
	100	2
	101	2
3821-262-204-00	98	7
	99	8
	100	7
	101	8
3822-330-601-00	6	3
3824-247-202-00	98	3
	99	3
	100	3
	101	3
3827-270-003-00	98	12

Part Code	Fig.	Key
3827-270-003-00	99	14
	100	12
	101	13
3829-260-303-00	98	15
	100	15
3829-311-200-00	11	16
	12	13
3829-387-410-00	75	10
3829-905-001-00	154	12
3830-311-210-00	11	13
3838-620-002-00	73	3
	74	3
3843-271-210-00	96	25
	97	25
3908-170-020-00	11	2
	13	15
	13	31
	18	13
	19	13
	20	3
	21	5
	79	15
	80	15
	81	15
	82	15
	90	8
	120	26
	150	25
	165	7
4106-102-028-00	3	25
4131-103-004-00	121	12
4132-303-003-00	6	11
4138-406-004-00	142	4
4141-205-002-00	38	25
4148-204-005-00	141	6
4148-401-035-00	67	33
	68	29
	69	33
	70	29
4502-205-021-00	66	6
4512-106-005-00	92	6
	147	8
6219-755-001-00	11	26
6221-408-003-00	5	33
6221-408-007-00	5	32

Part Code	Fig.	Key	Part Code	Fig.	Key	Part Code	Fig.	Key
6221-408-008-00	5	26	8836-706-006-10	172	3	8842-405-019-00	160	73
6221-408-009-00	5	27	8836-706-400-00	172	6	8842-405-028-00	160	12
6221-408-010-00	5	28	8836-730-006-00	197	17	8842-405-032-00	160	14
6221-408-011-00	5	30		198	15	8842-405-033-00	160	57
6221-408-013-00	5	31	8836-730-209-00	197	7		161	13
7954-205-101-00	22	3		198	7		166	8
7957-405-003-00	20	12	8836-730-215-00	197	30		173	16
	21	14		197	32	8842-405-034-00	166	46
	112	26		198	26	8842-405-320-00	160	7
	113	25	8836-730-216-00	197	39	8842-505-001-20	161	8
	113	37		198	33	8842-505-002-00	161	2
	142	8	8836-730-221-00	197	9	8842-505-004-00	161	9
8822-001-200-10	178	1		198	9	8842-505-006-00	161	10
8822-002-200-10	180	1	8836-749-002-00	167	23	8842-505-007-00	161	3
8822-004-200-00	181	1	8838-741-004-00	109	15	8842-505-019-00	161	20
8822-030-001-00	182	11		166	36	8842-505-021-00	161	21
8822-030-002-00	182	6	8841-536-011-00	169	25	8842-505-022-00	161	22
8822-030-003-00	182	7		169	57	8842-505-023-00	161	25
8822-030-400-00	182	1	8841-536-018-00	173	23	8842-505-024-00	161	26
8822-037-210-20	180	2	8841-565-300-10	163	18	8842-505-025-00	161	23
8822-037-300-20	178	2	8841-701-027-00	169	10	8842-505-026-00	161	24
8822-037-500-10	178	5		169	42	8842-505-031-00	161	16
	181	2	8841-701-062-00	66	3-A	8842-505-032-00	161	19
8831-302-201-00	197	8		66	5-A	8842-505-033-00	161	18
	198	8		120	7	8842-505-034-00	161	17
8836-502-203-00	64	10		131	8	8842-505-035-00	161	15
	96	24		173	15	8842-505-036-00	165	3-A
	97	24	8841-716-001-00	197	13	8842-505-037-00	161	13-A
	163	30		198	11		162	45-A
	166	35	8841-716-002-00	197	29		166	15
8836-506-005-00	165	9		198	25		173	16-A
8836-508-001-00	165	8	8841-716-009-00	197	12	8842-505-038-00	166	17
8836-601-011-00	163	7		198	14	8842-508-003-10	161	1
8836-601-012-10	163	9	8841-716-011-00	197	38	8842-515-002-00	162	1
8836-601-013-00	163	6		198	32	8842-515-003-00	162	32
8836-602-005-10	174	10	8841-716-017-00	197	11	8842-515-005-10	162	28
	175	10	8841-716-018-00	197	10	8842-515-006-00	162	39
8836-602-006-10	174	12	8841-716-019-00	197	44	8842-515-011-10	162	37
	175	12		198	36	8842-515-011-20	162	37-A
8836-701-004-00	167	13	8841-716-214-00	197	14	8842-515-013-00	162	22
8836-701-230-10	167	12		198	12	8842-515-015-00	162	6
8836-703-013-00	160	67	8841-716-230-10	197	6	8842-515-017-00	162	34
8836-703-055-00	151	35		198	6	8842-515-018-00	162	23
	160	8	8841-718-001-10	197	4	8842-515-020-10	162	12
8836-703-431-00	160	66	8842-405-013-00	160	10	8842-515-021-00	162	24

Numerical Index

Part Code	Fig.	Key	Part Code	Fig.	Key	Part Code	Fig.	Key
8842-515-022-00	162	29	8842-705-018-00	169	78-A	8842-705-223-00	169	35
	162	38	8842-705-019-00	169	82-A	8842-705-224-00	169	18
	162	40	8842-705-024-00	169	30		169	50
	162	49		169	62	8842-706-201-00	169	61
	169	77	8842-705-027-00	169	74	8842-715-001-10	197	54
	169	85	8842-705-029-00	169	76		198	35
8842-515-023-00	162	44	8842-705-201-00	169	1	8842-715-002-00	197	53
8842-515-025-00	162	29-A		169	33		198	38
	162	38-A	8842-705-202-00	169	2	8842-725-001-00	172	9
	162	40-A		169	34	8842-725-002-00	172	10
	162	49-A	8842-705-203-00	169	8	8842-725-003-00	172	11
8842-515-210-00	161	4		169	40	8842-725-004-10	172	12
8842-515-260-30	162	8	8842-705-204-00	169	16	8842-725-007-20	172	2
8842-515-300-00	162	7		169	48	8842-726-001-00	172	13
8842-515-350-00	162	16	8842-705-205-00	169	9		172	13-A
8842-515-351-00	162	17		169	41	8842-728-001-10	172	15
	162	31	8842-705-206-00	169	71	8842-729-003-00	172	16
	162	50	8842-705-207-00	169	22	8842-735-001-00	173	11
8842-515-360-00	162	30		169	54	8842-735-240-00	173	12
8842-535-250-10	163	17	8842-705-208-00	169	26	8842-905-032-00	176	7
8842-538-220-10	163	5		169	58	8842-905-041-00	176	9
8842-605-002-30	165	2	8842-705-209-00	169	28	8842-905-042-00	176	8
8842-605-004-10	170	6		169	60	8842-905-045-00	176	12
	171	6	8842-705-211-00	169	27	8842-905-046-00	176	13
8842-625-001-00	167	24		169	59	8842-919-002-10	177	1
8842-625-404-00	167	7	8842-705-211-10	169	27-A	8843-404-006-00	160	20
8842-625-405-00	167	8		169	59-A	8843-404-007-10	160	16
8842-625-406-00	167	9	8842-705-213-00	169	29	8843-404-009-00	160	19
8842-625-407-00	167	3	8842-705-214-10	169	12	8843-534-002-00	166	45
8842-625-408-00	167	5		169	44		166	57
	167	5-A	8842-705-215-00	169	14	8843-624-004-00	167	14
8842-625-409-00	167	4		169	46	8843-624-210-00	167	11
	167	4-A	8842-705-216-00	169	15	8843-624-220-00	167	10
8842-628-001-00	167	25		169	47	8843-904-017-00	176	10
8842-628-002-00	167	26	8842-705-217-00	169	17	8844-405-001-00	160	50
8842-628-300-10	167	1		169	49	8844-405-002-00	160	51
8842-705-002-00	169	80	8842-705-218-00	169	19	8844-405-003-00	160	62
8842-705-004-20	169	70		169	51	8844-405-009-10	160	70
8842-705-005-00	169	72	8842-705-219-00	169	21	8844-405-010-00	160	71
8842-705-006-00	169	73		169	53	8844-405-014-00	160	44
8842-705-009-00	169	75	8842-705-220-00	169	7	8844-405-017-00	160	59
8842-705-014-00	169	78		169	39	8844-405-019-00	67	17
8842-705-015-00	169	82	8842-705-221-00	169	32		69	17
8842-705-016-00	169	83		169	64	8844-405-021-00	160	52
8842-705-017-00	169	81	8842-705-223-00	169	3	8844-405-022-00	160	63

Numerical Index

Part Code	Fig.	Key	Part Code	Fig.	Key	Part Code	Fig.	Key
8844-405-024-00	160	21	8844-618-250-30	166	4-A	8844-718-212-00	197	2
8844-405-026-00	160	35	8844-618-260-10	166	5		198	2
8844-405-027-00	160	25	8844-618-310-20	166	18	8844-718-220-10	197	3
8844-405-310-00	160	38	8844-618-310-30	166	18-A	8844-718-230-00	170	2
8844-406-260-00	160	72	8844-618-320-20	166	19		171	2
8844-407-002-00	160	56	8844-618-320-30	166	19-A	8844-718-310-00	171	1
8844-408-001-30	160	34	8844-618-330-10	166	27	8844-718-310-30	171	1-A
8844-408-001-40	160	34-A	8844-618-400-00	166	47	8844-718-310-40	171	1-B
8844-408-005-00	160	4	8844-618-540-00	168	1	8844-718-320-10	198	3
8844-408-011-00	160	6	8844-618-550-00	166	55	8844-718-320-20	198	3-A
8844-408-018-00	160	11	8844-618-560-00	166	56	8844-718-320-30	198	3-B
8844-408-019-00	160	77	8844-627-230-20	166	44	8844-725-002-00	172	7
8844-408-200-00	160	1	8844-628-220-10	166	43	8844-725-006-00	172	21
8844-408-220-10	160	29	8844-629-300-00	167	1-A	8844-725-031-10	172	5
8844-408-230-00	160	31	8844-629-300-10	167	1-B	8844-725-310-10	172	4
8844-408-400-00	160	26	8844-629-300-20	167	1-C	8844-727-200-00	172	1
8844-505-001-00	161	11	8844-629-304-10	167	7-A	8844-728-001-00	172	23
8844-505-002-00	161	12	8844-629-305-00	167	8-A	8844-728-003-00	172	14
8844-505-015-10	161	27	8844-629-306-00	167	9-A	8844-745-006-10	174	3
8844-518-001-00	162	14	8844-629-307-00	167	3-A		175	3
8844-518-001-10	162	14-A	8844-629-310-00	167	2	8844-745-009-10	174	2
8844-518-002-00	162	35	8844-629-310-10	167	2-A		175	2
8844-518-002-10	162	35-A	8844-706-001-00	169	68	8844-745-013-00	174	8
8844-518-003-00	162	36	8844-706-200-10	160	64		175	8
8844-518-003-10	162	36-A	8844-706-210-00	160	65	8844-745-220-20	175	1
8844-518-004-00	162	52	8844-708-003-00	169	69	8844-745-220-30	175	1-A
8844-518-210-00	162	48	8844-708-003-10	169	69-A	8844-745-220-40	174	1
8844-535-001-00	163	24	8844-711-222-00	198	4	8844-746-003-10	175	9
8844-535-001-10	163	24-A	8844-711-222-10	198	4-A	8844-746-004-10	175	11
8844-535-002-00	163	8	8844-711-223-00	198	10	8844-746-007-00	174	17
8844-535-200-10	163	19	8844-715-006-10	197	23		175	17
8844-535-300-00	163	25		198	20	8844-748-003-00	174	9
8844-538-210-00	163	1	8844-715-222-10	197	21	8844-748-004-00	174	11
8844-538-230-00	163	3	8844-715-223-10	197	22	8844-765-001-00	173	6
8844-548-200-00	164	5	8844-718-001-00	197	43	8844-765-002-00	173	7
8844-548-210-00	169	84		198	37	8844-765-007-20	173	20
8844-608-001-00	165	1	8844-718-002-00	170	8	8844-765-200-00	173	1
8844-615-003-00	166	14	8844-718-003-10	197	25	8844-765-210-00	173	2
8844-615-006-00	166	23		198	22	8844-765-310-10	173	8
8844-616-001-00	166	13	8844-718-004-10	197	24	8844-765-320-10	72	29
8844-616-007-00	166	50		198	21	8844-765-400-20	173	19
8844-616-008-00	166	51	8844-718-006-00	171	8	8844-765-400-40	173	19-A
8844-616-330-00	166	40	8844-718-200-10	170	1	8844-768-300-00	173	9
8844-618-007-10	166	52	8844-718-211-00	197	1	8844-905-007-00	176	5
8844-618-250-20	166	4		198	1	8844-906-001-00	176	11

Numerical Index

Part Code	Fig.	Key	Part Code	Fig.	Key	Part Code	Fig.	Key
8844-906-003-00	176	3	K116-005-104-00	63	34	K510-001-010-00	192	8
8844-906-006-00	176	14	K116-024-003-00	189	2	K510-001-011-00	191	9
8844-908-007-00	176	1	K116-024-004-00	189	3		192	9
8844-908-007-10	176	1-A	K116-024-005-00	189	4	K510-001-013-00	191	11
8844-908-007-20	176	1-B	K116-024-006-10	189	6	K510-001-013-10	191	11-A
8844-908-008-00	176	2	K116-024-006-20	189	6-A	K510-001-013-20	191	11-B
8844-908-008-10	176	2-A	K116-024-007-00	189	9		192	11
8844-908-008-20	176	2-B	K116-024-008-10	189	10	K510-001-015-00	191	13
8844-908-009-00	176	4	K116-024-200-00	189	1		192	13
8844-908-009-10	176	4-A	K116-029-000-40	128	1	K510-001-016-00	191	15
8849-001-200-00	158	3	K116-029-000-50	128	1-A		192	15
	159	2	K116-029-003-00	189	12	K510-001-017-00	191	16
8849-001-300-00	179	1	K116-029-300-00	189	13		192	16
J061-116-025-00	61	15	K116-029-400-00	189	11-A	K510-001-018-00	191	17
	61	21	K116-032-100-00	189	11		192	17
	62	15	K200-042-003-00	190	18	K510-001-019-00	191	18
	62	20	K200-042-300-00	190	1		192	18
	63	15	K200-103-003-20	190	10	K510-001-020-00	191	19
	63	23	K200-103-004-10	190	12		192	19
J061-120-032-00	6	13	K200-103-005-00	190	11	K510-001-021-10	191	20
	11	8-A	K200-124-130-00	190	22		192	20
	61	6	K200-131-006-00	190	9	K510-001-022-00	191	21
	62	6	K200-131-012-00	190	7		192	21
	63	6	K200-131-013-20	190	14	K510-001-026-00	191	24
J061-123-035-00	5	13	K200-131-014-00	190	25		192	24
	11	8	K200-181-000-40	75	1	K510-001-029-00	191	25
J061-132-050-00	121	23	K211-035-005-00	61	33		192	25
J061-170-090-00	167	16		62	31	K510-001-031-00	191	33
J061-210-015-00	5	24		63	36		192	33
J061-236-044-00	5	14	K211-035-012-00	190	17	K510-001-034-00	191	36
J061-249-060-00	5	22	K233-001-004-00	190	6		192	36
J062-104-111-00	61	12	K233-007-000-10	61	30	K510-001-036-00	191	41
	62	12		62	28		192	41
	63	12		63	33	K510-001-039-00	191	32
J062-111-120-00	4	17	K270-001-003-10	190	2		192	32
	11	22	K270-001-004-10	190	3	K510-002-001-10	191	1
J062-119-126-00	11	15	K270-001-005-00	190	4	K510-002-014-00	191	12
	11	19	K275-001-003-00	191	26		192	12
	11	21		192	26	K510-005-005-00	191	3
	11	25	K510-001-006-10	191	4	K510-005-024-00	191	23
	12	11	K510-001-007-00	191	5		192	23
	121	10		192	5	K510-006-004-00	191	2
J062-138-148-00	12	11-A	K510-001-008-00	191	6	K510-006-004-10	191	2-A
K116-005-104-00	61	31	K510-001-009-00	191	7		192	2
	62	29	K510-001-010-00	191	8	K510-006-008-00	191	6-A

Part Code	Fig.	Key
K510-006-008-00	192	6
K510-006-012-10	191	10
K510-006-012-20	191	10-A
K510-006-012-30	191	10-B
	192	10
K510-006-014-00	192	12-A
K510-006-023-00	191	22
	192	22
K510-006-037-00	191	43
	192	43
K510-006-038-00	191	44
	192	44
K510-010-006-10	192	4
K510-010-009-00	192	7
K510-013-000-20	16	1
	17	1
K510-013-000-30	16	1-A
	17	1-A
K510-019-000-00	14	1
	15	1
K510-019-000-10	14	1-A
	15	1-A
K510-019-001-00	192	1
K510-019-005-00	192	3
P103-121-012-00	141	28
P103-521-007-00	14	3
	15	3
	16	3
	17	3
P112-711-201-00	65	2
V111-163-001-20	56	21
V111-163-001-60	94	3
V111-164-001-20	197	49
V111-168-003-00	115	8
	116	8
V111-168-003-50	116	8-A
V111-703-001-20	198	16
V111-703-001-60	163	13
V111-704-001-00	160	22
	169	24
	169	56
V111-704-001-20	172	24
	197	28
	197	45
	198	34
V111-704-001-60	197	20
V111-704-002-00	197	16
V111-705-001-00	160	17
V112-168-001-60	148	21
	149	21
V112-168-002-00	148	8
	149	8
V112-706-002-00	148	17
	148	39
	149	17
	149	39
V120-364-000-80	145	74
	146	57
V120-364-001-00	38	30
	56	12
	119	24
	128	10
V120-364-001-20	145	75
	146	58
V120-365-001-20	148	43
V120-365-002-50	105	10
	106	10
	107	8
V120-366-001-20	13	3
V120-366-002-00	96	50
	97	50
V120-366-002-50	193	3
	193	26
	194	3
	195	3
	195	26
	196	3
V120-366-003-00	193	26-A
	194	25
	195	26-A
	196	25
V180-446-001-20	169	86
V195-102-504-40	145	73
	146	56
V195-164-012-10	91	3
V195-164-016-10	145	80
	146	63
V200-260-501-20	141	46
V200-260-601-20	151	39
	151	64
V200-260-601-60	105	13
	106	13
	107	11
	151	59
V200-260-602-50	145	28
	145	47
	146	18
	146	30
V200-260-603-00	111	39
	151	25
	151	49
V200-260-604-00	61	36
	62	34
	63	39
V200-360-601-60	112	20
V200-360-603-50	113	20
V200-700-501-00	163	11
V200-700-601-20	4	10
	162	41
V200-700-601-60	160	60
	162	2
	162	9
	162	20
	163	21
	164	2
	164	6
	167	19
	169	4
	169	36
	170	5
	171	5
	174	13
	175	13
V200-700-602-00	167	27
	169	65
	173	3
V200-700-602-50	163	20
	166	39
	172	17
V200-700-603-00	193	45
	194	44
	195	45
	196	44
V200-700-803-00	165	3
	174	4

Numerical Index

Part Code	Fig.	Key
V200-700-803-00	175	4
V201-260-802-50	115	17
	116	20
V201-260-803-50	93	4
	140	2
V201-260-805-50	75	3
V201-260-806-00	92	4
V201-260-806-50	92	4-A
V201-260-808-00	57	2
V201-261-003-50	178	6
	180	9
V201-261-007-50	14	8
	15	8
	16	8
	17	8
V201-261-014-00	14	7
	15	7
	16	7
	17	7
V201-360-801-60	46	3
V201-360-804-50	67	18
	69	18
V201-360-809-00	22	5
V201-361-002-5B	118	16
V201-361-003-00	117	7
V201-361-003-50	41	15
	42	15
V201-361-004-00	41	18
	182	3
V201-361-006-50	166	21
V201-361-204-00	37	3
	178	3
	181	3
	182	14
V201-461-003-50	41	15-A
	42	15-A
V201-461-004-50	38	18
V201-700-801-60	166	41
	167	20
V201-700-802-00	162	45
	166	2
V201-700-803-00	160	54
V203-461-002-20	3	4
V210-260-601-00	38	24
	141	40
V210-260-601-20	38	24-A
	88	13
V210-260-601-60	6	6
	38	28
	110	32
	121	17
	145	30
	146	20
	150	2
	151	63
V210-260-602-00	63	20
	121	5
	148	15
	149	15
V210-260-603-00	128	16
V210-260-603-50	5	35-A
V210-360-601-20	3	21
	5	34
	6	16
	12	16
	20	10
	21	12
	145	62
	146	45
V210-360-601-60	13	28
	13	38
	20	10-A
	28	19
	71	2
	72	2
	73	5
	74	5
	98	23
	99	20
	100	23
	101	18
	107	5
	121	36
	128	14
	129	4
	150	21
	190	21-A
V210-360-602-00	6	6-A
	55	29
	78	2
V210-360-602-00	105	5
	106	5
	145	61
	145	66
	145	68
	145	78
	146	44
	146	49
	146	51
	146	61
	150	20
	151	37
	194	54
	196	54
V210-360-602-50	108	2
	108	6
	145	27
	145	46
	146	17
	146	29
V210-360-603-00	71	14
	72	15
	150	4
	150	10
	150	14
	150	35
V210-560-603-00	189	17
V210-660-603-00	111	43
V211-260-801-20	147	7
V211-260-801-60	3	23
	4	21
	40	7
	55	18-A
	61	4
	61	18
	62	4
	62	17
	63	4
	65	8
	65	8-A
	86	15
	87	6
	111	13
	111	15
	111	17

Part Code	Fig.	Key
V211-260-801-60	112	10
	112	12
	112	22
	113	10
	113	12
	113	22
	118	20
	131	24
	131	32
	141	50
	160	32
V211-260-802-00	3	22
	3	30
	5	8
	14	17
	16	17
	17	19
	47	9
	48	11
	53	8
	55	18
	56	4
	74	8
	79	27
	81	26
	82	25
	86	5
	87	3-A
	110	9
	112	4
	113	4
	113	27
	118	27
	118	37
	133	5
	133	5-A
	134	5
	148	33
	149	33
V211-260-802-50	8	2
	15	19
	17	19-A
	67	4
	68	5
	69	4

Part Code	Fig.	Key
V211-260-802-50	70	5
	118	22
	118	29
	118	31
	118	34
	118	39
	118	42
	130	3
	131	3
	133	6
	133	6-A
	134	6
	148	26
	149	26
V211-260-803-00	15	17
	17	17
	67	54
	68	50
	69	54
	70	50
	110	10
	118	23
V211-260-804-50	111	27
V211-260-805-50	28	17
V211-261-002-00	110	36
V211-261-002-50	90	14
V211-261-003-00	76	4
V211-261-004-50	182	8
V211-360-801-60	18	10
	19	10
	87	3
	112	43
	113	44
	141	19
	160	28
	166	29
V211-360-802-00	4	4
	4	15
	11	27
	13	9
	18	6
	19	6
	47	6
	48	6
	48	9

Part Code	Fig.	Key
V211-360-802-00	48	11-A
	55	19
	55	21
	56	31
	58	2
	58	6
	63	19
	67	55
	67	56
	68	51
	68	54
	69	55
	69	56
	70	51
	70	54
	79	25
	79	32
	79	34
	80	22
	80	27
	81	30
	81	32
	82	30
	83	4
	84	4
	84	7
	85	2
	89	12
	90	3
	110	26
	111	28
	115	3
	115	15
	116	3
	116	12
	116	18
	122	3
	123	3
	124	3
	125	3
	126	3
	129	2
	133	9
	133	14
	134	9

Numerical Index

Part Code	Fig.	Key
V211-360-802-00	134	14
	135	4
	135	7
	136	4
	136	13
	137	4
	137	13
	138	4
	138	13
	139	4
	139	13
	141	50-A
	145	16
	145	21
	145	52
	146	5
	146	5-A
	146	11
	146	35
	166	1
	166	20
	168	2
V211-360-802-50	4	1
	79	13
	79	19
	80	13
	81	13
	81	18
	81	24
	82	13
	82	23
	83	2
	84	2
	85	4
	88	21
	122	6
	133	10
	134	10
V211-360-804-00	72	19
V211-360-804-50	18	2
	19	2
V211-360-805-00	111	22
V211-361-002-00	79	23
	80	20
	81	22

Part Code	Fig.	Key
V211-361-002-00	82	21
V211-560-802-00	52	8
	166	20-A
V211-560-802-50	67	48
	68	44
	68	53
	69	48
	70	44
	70	53
	90	3-A
	110	3
	160	78
V211-560-803-00	160	35-A
V211-560-803-50	22	4
V211-560-804-50	54	4
V211-660-802-00	47	7
	48	7
V220-541-003-50	191	42
	192	42
V231-360-802-00	1	3
	2	3
V251-260-802-50	148	9
	149	9
V252-461-002-50	47	2
	48	2
V271-160-601-50	150	39-A
V273-360-802-00	129	6
V301-260-004-00	11	4
	12	3
V301-260-006-00	56	52
	61	37
	62	35
	63	40
	86	13
	87	13
	88	14
	111	10-A
	111	40
	112	21
	113	21
	119	27
	128	11
	150	3
	150	7
	190	20

Part Code	Fig.	Key
V301-260-006-00	194	55
	196	55
V301-700-003-00	163	16
	165	11
	167	6
	167	6-A
	198	19
V301-700-004-00	172	27
	197	19
	197	37
	197	42
	197	48
	197	52
	198	31
V301-700-006-00	4	2
	148	19
	148	41
	149	19
	149	41
	161	7
	162	5
	162	43
	166	37
	167	17
	167	30
	169	87
	172	20
	174	16
	175	16
	193	46
	194	45
	195	46
	196	45
V302-260-006-00	56	10
	151	54
V304-260-008-00	7	7
	13	7-A
	13	18
	13	21
	14	16
	15	33
	16	16
	17	33
	18	19
	18	22

Part Code	Fig.	Key
V304-260-008-00	19	19
	19	22
	56	42
	72	18
	92	5
	111	25
	115	18
	116	21
	119	21
	127	4
	127	4-A
	140	3
	141	35
	147	4
	160	43
	160	49
	166	24
	173	21
V304-260-010-00	3	11
	7	3
	65	12
	89	10
	121	28
	121	31
	145	55
	146	38
	166	22
	178	8
	180	5
	180	11
V304-260-012-00	3	10
	3	10-A
	36	4
	37	4
	45	4
	119	16
	178	4
	181	4
	182	15
V304-260-014-00	64	2
V304-460-008-00	38	14
	143	6
	144	6
	148	12
	149	12

Part Code	Fig.	Key
V304-460-010-00	47	3
	48	3
V304-700-008-00	3	18
	160	37
	174	7
	175	7
	193	53
	194	52
	195	53
	196	52
V305-260-008-00	71	13
	72	14
V334-260-010-00	14	19
	15	16
	16	19
	17	16
V334-260-020-00	51	5
V335-260-008-00	64	9
	96	23
	97	23
	109	14
	163	29
	166	34
V335-260-010-00	39	2
V350-160-006-00	77	8
	95	4
V360-260-005-00	98	25
	99	22
	100	25
	105	11
	106	11
	107	9
V360-260-006-00	5	36
	13	29
	13	39
	38	32
	55	30
	71	15
	72	16
	84	5
	103	5
	104	3
	105	8
	105	14
	106	8

Part Code	Fig.	Key
V360-260-006-00	106	14
	107	6
	107	12
	111	10
	111	34
	111	37
	111	44
	111	47
	119	26-A
	145	31
	146	21
	148	35
	149	35
	151	26
	151	40
	151	50
	151	65
	184	5
V361-260-006-00	86	11-A
	87	11-A
V362-260-008-00	4	5
	11	28
	13	13
	13	26
	13	36
	20	11
	21	13
	55	10
	55	22
	64	5
	67	57
	68	55
	69	57
	70	55
	79	26
	79	35
	80	23
	81	25
	81	33
	82	24
	84	8
	86	6
	87	4
	91	5
	91	9

Numerical Index

Part Code	Fig.	Key
V362-260-008-00	109	2
	111	23
	111	26
	112	5
	113	5
	115	4
	115	9
	115	16
	116	4
	116	9
	116	13
	116	19
	118	41
	122	7
	127	5-A
	130	4-A
	133	7
	134	7
	148	34
	149	34
	160	33
V363-260-008-00	3	29
	18	3
	19	3
	89	13
	113	28
	123	4
	124	4
	125	4
	126	4
	130	4
	166	30
V363-260-010-00	79	24
	80	21
	81	23
	82	22
	110	37
	133	17
	134	17
V401-160-003-00	56	20
	94	4
	141	44
V401-160-004-00	11	5
	12	4
V401-160-006-00	61	38

Part Code	Fig.	Key
V401-160-006-00	62	36
	63	41
	86	12
	87	12
	119	26
	121	13
	128	12
	150	17
V401-160-008-00	13	22
	18	23
	19	23
	22	6
	29	9
	46	4
	57	3
	64	8
	67	19
	69	19
	75	4
	96	22
	97	22
	109	13
	111	24
	119	22
	128	5
	141	34
	143	5
	144	5
	147	3
	160	42
	160	48
	163	28
	166	25
	166	33
V401-160-010-00	3	5
	3	13
	7	5
	9	4
	10	2
	14	9
	14	18
	15	9
	15	15
	16	9
	16	18

Part Code	Fig.	Key
V401-160-010-00	17	9
	17	15
	38	19
	38	22
	39	4
	41	16
	42	16
	47	4
	48	4
	51	8
	65	11
	117	8
	118	17
	121	29
	121	32
	145	56
	146	39
	178	7
	180	4
	180	10
	182	4
V401-160-012-00	3	12
	3	12-A
	36	5
	45	5
	76	6
	119	17
V401-160-020-00	51	4
V401-700-003-00	163	15
	165	10
	198	17
V401-700-004-00	160	23
	169	23
	169	55
	172	25
	197	18
	197	36
	197	41
	197	47
	197	51
	198	30
V401-700-005-00	160	18
	163	12
V401-700-006-00	4	3
	4	11

Part Code	Fig.	Key
V401-700-006-00	148	18
	148	40
	149	18
	149	40
	160	61
	161	6
	162	4
	162	10
	162	21
	162	42
	163	22
	164	4
	164	8
	166	38
	166	54
	167	18
	167	28
	169	5
	169	37
	169	66
	170	4
	171	4
	172	18
	173	4
	174	15
	175	15
V401-700-008-00	3	19
	160	15
	160	36
	160	53
	160	55
	160	58
	161	14
	162	46
	165	5
	166	9
	166	16
	166	42
	167	21
	173	17
	174	5
	175	5
	193	52
	194	51
	195	52

Part Code	Fig.	Key
V401-700-008-00	196	51
V410-260-010-00	121	30
V411-260-003-00	56	19
	77	6
	79	7
	80	7
	81	7
	82	7
	94	5
	141	43
V411-260-004-00	145	13
	145	25
	145	36
	145	42
	145	49
	146	15
	146	32
V411-260-005-00	73	10
	74	11
V411-260-006-00	65	4
	67	52
	68	48
	69	52
	70	48
	110	6
	110	48
	111	9
	150	18
	150	30
	190	27
V411-260-008-00	13	6-A
	46	5
	56	14
	56	23
	56	26
	56	54
	57	4
	73	12
	74	13
	75	5
	90	4
	110	42
	115	19
	116	22
	127	5

Part Code	Fig.	Key
V411-260-008-00	148	11
	149	11
V411-260-010-00	3	6
	3	15
	7	4
	65	10
	72	22
	112	8
	112	31
	113	8
	113	32
	145	57
	146	40
V411-260-012-00	3	14
	3	14-A
	13	6
	55	6
	110	39
	119	18
	128	7
V411-260-014-00	114	5
	114	23
V411-700-003-00	163	14
	197	34
	198	18
	198	28
V411-700-004-00	160	24
	172	26
	197	15
	197	35
	197	40
	197	46
	197	50
	198	13
	198	29
V411-700-006-00	161	5
	162	3
	162	11
	163	23
	164	3
	164	7
	167	29
	169	6
	169	38
	169	67

Numerical Index

Part Code	Fig.	Key
V411-700-006-00	170	3
	171	3
	172	19
	173	5
	174	14
	175	14
V411-700-008-00	160	74
	162	47
	162	51
	165	4
	166	3
	166	10
	167	22
	173	18
	174	6
	175	6
	197	27
	198	24
V411-700-010-00	162	18
V411-700-012-00	160	13
	162	51-A
V500-161-601-50	112	40
	113	41
V500-162-001-50	150	26
V500-162-501-50	20	4
	21	6
	119	12
	130	8
	145	70
	146	53
	162	13
	162	33
V500-162-502-00	13	7
	15	26
	17	26
	18	14
	19	14
	71	9
	72	7
	167	15
V500-162-502-50	39	3
	56	6-A
	56	48-A
V500-162-503-00	56	6
	56	48
V500-163-001-50	56	60
	141	4
	141	7
	151	70
V500-163-002-00	110	40
	110	43
	112	36
	113	37-A
	119	19
	141	26
	180	6
V500-163-002-50	60	3
	65	6
	66	3
	66	5
	73	11
	74	12
	90	11
	141	23
	142	5-A
V500-163-003-00	142	5
V500-163-003-50	118	3
V500-163-004-00	88	5
	88	24
V500-164-002-50	73	9
	74	10
V500-164-004-00	51	6
V522-100-601-60	118	24
	118	28
	118	32
	118	35
	118	38
	131	4
	148	13
	149	13
V522-100-801-80	14	10
	15	10
	16	10
	17	10
	22	10
	28	16
	29	15
	30	15
	51	9
	54	3
V523-100-300-80	193	35
	194	34
	195	35
	196	34
V523-100-601-80	67	3
	68	4
	69	3
	70	4
V560-160-008-00	73	6
	73	17
	74	6
	74	18
V580-140-602-80	50	3
V600-110-600-10	120	21
	193	13
	195	13
V600-110-600-20	114	14
	193	14
	194	13
	195	14
	196	13
V600-110-600-30	114	10
	131	14
V600-110-600-40	52	2
	53	2
	67	12
	67	30
	68	13
	68	26
	69	12
	69	30
	70	13
	70	26
V600-110-600-50	193	5
	194	5
	195	5
	196	5
V600-110-600-60	28	10
V600-110-600-90	41	9
	42	9
V600-110-620-10	110	22
	194	12
	196	12
V600-110-620-20	31	5
	32	5

Part Code	Fig.	Key
V600-110-620-20	67	26
	68	22
	69	26
	70	22
V600-110-620-30	23	2
	24	2
	26	4
	27	2
	54	16
	110	23
	120	22
	131	30
V600-110-620-40	28	14
	54	11
	191	14
	192	14
V600-110-620-50	23	3
	24	3
	29	10
	30	9
	38	11
	41	3
	42	3
V600-110-620-60	30	11
	54	19
V600-110-620-80	54	20
V600-110-630-10	31	2
	31	4
	32	2
	32	4
V600-110-630-20	68	15
	70	15
V600-110-630-30	25	4
	25	5
	26	5
	27	4
	118	10
V600-110-630-40	28	2
	33	2
	54	17
V600-110-630-50	41	23
	42	22
	44	2
V600-110-630-60	43	3
	44	3

Part Code	Fig.	Key
V600-110-690-30	191	37
	192	37
V600-110-690-70	38	3
	113	16
	118	5
V600-150-600-00	145	63
	146	46
	160	76
V600-150-600-20	121	6
	160	2
V600-150-600-30	191	38
	192	38
V600-150-600-50	120	35
V600-150-600-60	15	20
	17	20
	117	6
V600-150-620-20	38	4
	120	38
V600-150-620-30	38	8
V600-150-630-10	38	21
V600-350-620-00	141	24
V600-350-620-20	40	2
V682-200-000-80	189	8
V682-200-001-00	34	3
	67	36
	67	43
	68	32
	68	39
	69	36
	69	43
	70	32
	70	39
V704-140-010-00	141	25-A
	145	64
	146	47
V704-140-015-00	9	7
	15	27
	17	27
	114	3
	114	15
	114	21
V704-140-016-00	110	16
V704-140-017-00	114	9
	118	12
	131	11

Part Code	Fig.	Key
V704-140-017-00	191	40
	192	40
V704-140-018-00	33	3
V704-140-019-00	67	24
	68	9
	68	20
	69	24
	70	9
	70	20
V704-140-020-00	25	6
	26	6
	28	11
	33	6
	41	7
	42	7
	52	3
	53	3
	54	14
	191	29
	192	29
V704-140-025-00	41	4
	42	4
	120	34
V704-140-030-00	160	68
V704-140-032-00	49	2
	49	6
	120	4
V704-140-035-00	112	17
	113	17
V705-140-017-00	109	19
	121	21
V705-140-025-00	67	41
	68	37
	69	41
	70	37
	110	31
V705-140-030-00	191	39
	192	39
V705-140-032-00	191	31
	192	31
V705-140-035-00	31	7
	32	7
	38	5
	40	3
	114	8

Numerical Index

Part Code	Fig.	Key
V705-140-035-00	131	15
V705-140-040-00	38	9
V705-140-042-00	52	4
	53	4
V705-140-045-00	41	5
	42	5
V705-140-047-00	54	12
	118	11
	120	36
	191	30
	192	30
V705-140-052-00	23	4
	24	4
	28	3
	33	4
	38	13
V706-140-045-00	41	10
	42	10
V707-140-055-00	15	22
	17	22
	38	2
	112	18
	113	18
V707-140-062-00	41	13
	41	26
	42	13
	42	25
V707-140-075-00	41	11
	42	11
V710-140-006-00	151	43
V710-140-010-00	112	28
	113	29
V710-140-024-00	131	28
V720-101-900-80	22	13
V720-101-901-00	34	6
	67	38
	67	45
	68	34
	68	41
	69	38
	69	45
	70	34
	70	41
	131	35
V720-102-401-20	61	32

Part Code	Fig.	Key
V720-102-401-20	62	30
	63	35
V720-102-401-50	121	3
V720-103-502-80	193	43
	194	42
	195	43
	196	42
V720-103-503-80	61	3
	62	3
	63	3
V720-103-503-90	14	5
	15	5
	16	5
	17	5
	59	2
V720-103-504-50	51	2
V720-111-900-80	190	16
V720-111-900-90	189	7
V720-112-401-10	75	9
	75	11
	76	8
	76	10
	190	24
	191	28
	192	28
V720-112-401-40	59	5
	189	5
	190	8
	191	27
	192	27
V720-112-401-60	190	23
V720-112-401-80	14	4
	15	4
	16	4
	17	4
	190	15
V721-103-105-50	110	14
V721-103-106-00	14	6
	15	6
	16	6
	17	6
V723-111-501-20	190	19
V723-111-501-40	190	13
V723-112-002-90	189	16
	190	5

Part Code	Fig.	Key
V724-122-901-20	189	14
V740-117-300-60	131	31
V744-112-220-70	120	12
V744-112-250-70	67	35
	67	42
	68	31
	68	38
	69	35
	69	42
	70	31
	70	38
	110	30
V744-114-280-70	34	5
V744-115-250-70	71	6
	72	5
V744-115-300-70	120	39
	169	20
	169	52
V744-117-350-70	110	24
	114	7
V744-117-400-80	38	10
V744-117-470-80	118	13
	131	5
V744-120-300-70	72	27
	120	39-A
	169	13
	169	45
V744-120-350-70	67	6
	67	13
	67	31
	68	7
	68	27
	69	6
	69	13
	69	31
	70	7
	70	27
V744-120-420-80	53	5
V744-120-470-70	28	15
	52	5
	191	34
	192	34
V744-125-350-70	27	6
	35	2
V744-125-521-00	38	12

Numerical Index

Part Code	Fig.	Key	Part Code	Fig.	Key	Part Code	Fig.	Key
V744-130-420-80	160	69						
V744-130-500-80	28	13						
V744-140-550-80	114	16						
V760-150-000-00	65	3						
	67	51						
	68	47						
	69	51						
	70	47						
	110	5						
	121	19						
V763-150-000-00	51	10						
V780-140-000-1T	189	18						
	190	26						
V781-160-000-4B	41	27						
	42	26						
V781-160-000-6B	22	9						
V793-112-160-40	189	15						
W296-133-208-00	79	6						
	80	6						
	81	6						
	82	6						
W296-134-008-60	77	5						

Alpabetical Index

6004-097-421-10

Description	Fig.	Key
ADAPTER/255X065 ASSY	22	1
ARM/CONTROL	20	30
ARM/FLOATING COMP	20	20
ARM/TENSION	22	2
ARMATURE/STARTE ASSY	28	5
BALL	1	5
BEARING,RB/6004	20	14
BEARING,RB/6203	20	13
BEARING,THRUST CRANK	5	13
	6	2
	6	4
BEARING/BALL	20	14-A
	20	14-B
	29	6
	29	11
BEARING/CONNECTING R	6	5
	6	6
	13	7
BEARING/CRANK/LOWER	5	12
BEARING/CRANK/UPPER	5	11
BEARING/NEEDLE	28	8
	28	9
BEARING/OILLESS	28	12
	28	14
	28	16
BEARING/WITH SHOCKAB	28	13
BELT/VCOGA36.0	18	5
BELT/VNR5A36.0	18	5-A
BODY/NOZZLE HOLDER	26	2
BODY/OILPUMP	16	2
BOLT	1	7
	5	2
	9	35
	11	18
	16	5
	23	8
	24	7
	29	9
	29	10
	29	19
	29	20
	29	21
	29	22
	29	24
BOLT,ADJUST	5	29
BOLT,JOINT	16	11
BOLT,SEMS/M10X20	8	3
BOLT,SEMS/M6X12	12	5
	20	16
BOLT,SEMS/M8X25 7T	4	3
BOLT/CONNECTINGROD	13	6
BOLT/CRANK	15	9
BOLT/FLANGE	15	7
BOLT/M6	9	29
	9	30
BOLT/M6X10	20	18
BOLT/M6X18	20	26
BOLT/M8X20	9	36
	9	42
	20	8
BOLT/S	12	5-A
	16	5-A
	20	16-A
BOLT/THROUGH	28	30
BOLT/WASHERHEAD	27	10
BOLT/WS	16	4
BRACKET ROCKER SHAFT	11	12
BRACKET,ROCKER SHAFT	11	13
BRUSH	29	17
BRUSH/STARTER	28	2
BUSH	29	15
CAMSHAFT/INJECTION P	20	10
CAP,BLANK/30	9	32
CAP,OIL FILLER	2	2
CAP,SEALING	1	2
CARTRIDGE/OILFILTER	16	13
CLAMP,STRAINER	16	8
CLAMP/WIRE/10-15	17	15
CLAMP/WORM/14-24	7	4
CLIP/HOSE/7.6-8.2	21	4
CLIP/HOSE/8.7-9.3	21	7
CLUTCH/STARTER ASSY	28	6
COLLOR	29	3
CONNECTINGROD ASSY	13	5
CONNECTOR,OIL FILTER	5	24
CONNECTOR/FUEL	21	1
CONNECTOR/GLOWPLUG	24	4
COVER	9	38
	28	11
	29	13
COVER,BEARING	29	5
COVER,INJ PUMP	5	25
COVER/CYLINDER HEAD	2	1
COVER/HYDRAULIC	9	38-A
CRANKSHAFT ASSY	15	1
	15	1-A
CUP/SEALING/12	5	7
CUP/SEALING/16	9	3
CUP/SEALING/28	5	3
CUP/SEALING/36	5	4
CUTTER,VALVE	11	5
CYLINDERBLOCK ASSY	5	1
	5	1-A
	5	1-B
	5	1-C
	5	1-D
	5	1-E
CYLINDERHEAD ASSY	1	1
DOWEL	5	21
ELEMENT ASSY	27	9
FLANGEBOLT	3	3
	3	4
	5	27
	7	2
	9	6
	9	7
	9	9
	9	10
	9	11
	9	12
	9	37
	10	2
	11	19
	16	9
	17	7
	17	12
	17	18
	17	19
	17	23
	17	24
	18	2
	18	2-A
	23	3
	23	5
FLYWEIGHT	20	17

Alpabetical Index

Description	Fig.	Key
FLYWHEEL	15	5
FLYWHEEL ASSY	15	5-A
	15	5-B
FRAME	29	12
FRAME/COMMUTATOR END	28	10
FRAME/DRIVEEND ASSY	29	7
GASKET	2	5
	17	3
	24	6
	25	5
	25	21
GASKET,EXH.MANIFOLD	4	2
	25	7
GASKET,INLET MANIFOL	3	2
	25	6
GASKET,NOZZLE	19	3
GASKET,SPACER	17	10
	25	18
GASKET/COVER	5	26
	9	39
	25	11
GASKET/CYLINDERHEAD	1	6
	25	3
GASKET/DELIVERYVALVE	27	6
GASKET/GEARCASE	9	24
	25	14
GASKET/HOUSING	17	17
	25	19
GASKET/PLATE	9	34
	25	15
GASKET/WATER PUMP	17	6
	25	17
GEAR/CAMSHAFT	12	2
GEAR/CRANK	15	3
GEAR/IDLE ASSY	12	6
GEAR/INJECTIONPUMP	20	11
GEAR/STARTER PLANETA	28	17
GEAR/STARTERINTERNAL	28	18
GEARCASE ASSY	9	1
	9	1-A
	9	1-B
GENERATOR ASSY	23	1
GLOWPLUG	24	3
	24	3-A
GUIDE/LEVELGAGE COMP	5	32
GUIDE/LEVELGAGE COMP	5	32-A
HANGER	10	1
HOLDER ASSY	29	14
HOLDER/BRUSH ASSY	29	16
HOLDER/DELIVERYVALVE	27	4
HOLDER/NOZZLE ASSY	26	1
HOLDER/STARTER ASSY	28	3
HOSE,RUBBER	21	5
HOSE/RUBBER	2	6
	17	14
HOSE/RUBBER/140	7	3
HOSE/RUBBER/160	21	3
HOUSING ASSY	27	8
	27	8-A
HOUSING/STARTER ASSY	28	7
HOUSING/THERMOSTAT	17	16
	17	16-A
INJECTIONNOZZLE ASSY	19	1
INJECTIONPUMP ASSY	20	1
	20	1-A
	20	1-B
JOINTT-TYPE	21	6
KEY/07X05X09	12	3
	20	12
KEY/07X05X43	15	4
LEVELGAGE	5	31
	5	31-A
LEVER(CONTROL) COMP	20	25
LEVER/PINIONDRIVE	28	19
MANIFOLD(INLET) ASSY	3	1
MANIFOLD/EXHAUST	4	1
METAL,CRANK SET	5	10
METAL,CRANK SET 050	6	1
METAL,CRANK SET 100	6	3
NIPPLE	5	22
NIPPLE COMP	7	5
NOZZLE ASSY	26	51
NUT	9	40
	9	40-A
	11	17
	26	50
	28	28
	28	29
	28	34
	29	2
NUT	29	23
	29	25
NUT,CAP/M 8	9	16
NUT/CAP	2	4
NUT/M 6	20	27
NUT/M08	9	8
	11	20
	17	8
	17	13
	20	9
NUT/M10	23	6
NUT/M6	5	30
	9	31
	20	31
NUT/M8	9	15
	28	32
NUT/NOZZLERETAINING	26	5
NUT/PINIONSTOP	28	23
OILPUMP ASSY	16	1
OILSEAL	5	14
O-RING	17	22
	25	20
ORING	27	5
O-RING/P 8	20	28
O-RING/P15	16	7
	25	16
PACKING	9	17
	16	12
	25	13
PAN,OIL COMP	7	1
PIECE,DISTANCE	26	6
PIN	5	17
	5	28
	9	20
	9	20-A
	15	2
PIN,CONTROL	20	22
PIN,GROOVE	9	23
PIN,NOZZLE HOLDER	26	3
PIN,PISTON	13	3
PIN/ARM	9	18
PIN/IDLEGEAR	5	6
PIN/INJECTIONPUMP	27	12
PIN/SNAP	9	19
PIN/STRAIGHT	5	16

Alpabetical Index

6004-097-421-10

Description	Fig.	Key
PIN/STRAIGHT	16	3
PIN/TUBE	5	15
PIPE,OIL	16	10
PIPE,WATER DRAIN	5	23
PIPE/FUEL	21	2
PIPE/INJECTION ASSY	19	4
	19	5
	19	6
PIPE/WATEROUTLET	17	21-A
PIPE/WATEROUTRET	17	21
PISTON	13	1
PISTON(OV) 78.7	14	1
PISTON(OV) 79.2	14	3
PISTON/VALVE/RELIEF	9	26
PLATE	27	13
	28	27
	29	8
PLATE,THRUST	12	4
PLATE,THRUST INJPUMP	20	15
PLATE/ADJUST	23	2
PLATE/ADJUSTING	27	11
PLATE/FRONT	9	33
PLATE/REAR	8	1
PLATE/TAPPET/AD 0.2	27	25
PLATE/TAPPET/AD 0.25	27	29
PLATE/TAPPET/AD 0.3	27	26
PLATE/TAPPET/AD 0.35	27	30
PLATE/TAPPET/AD 0.4	27	27
PLATE/TAPPET/AD 0.45	27	31
PLATE/TAPPET/AD 0.5	27	28
PLATE/TAPPET/AD 0.55	27	32
PLATE/TAPPET/AD 0.6	27	20
PLATE/TAPPET/AD 0.65	27	33
PLATE/TAPPET/AD 0.7	27	21
PLATE/TAPPET/AD 0.8	27	22
PLATE/TAPPET/AD 0.9	27	23
PLATE/TAPPET/AD 1.0	27	24
PLATE/WATER PUMP	17	4
PLUG	11	11
PLUG/PT1/2	1	3
PLUG/PT1/8	5	5
	5	5-A
	9	2
	9	2-A
PLUG/SCREW	9	21
PLUG/SCREW/M14X1.5	7	6
POINTER	8	2
PULLEY	29	1
PULLEY/CRANK	15	8
	15	8-A
	15	8-B
PULLEY/WATERPUMP	18	1
RACK/CONTROL ASSY	27	15
REGULATOR ASSY	29	26
REPAIR/ENGINE SET	25	1
RING,SNAP	13	4
RING,SNAP/ 4 E	20	23
RING,SNAP/12 C	9	28
RING,SNAP/16 C	11	15
RING/PISTON SET	13	2
RING/PISTON/OV SET	14	2
	14	4
RING/SNAP	28	21
	28	22
RINGGEAR	15	6
RINK/CONTROL	20	21
ROCKERARM	11	9
ROCKERSHAFT ASSY	11	8
ROD,PUSH	11	7
ROTOR ASSY	29	4
SCREW	28	33
SCREW ADJUST	11	16
SCREW/HOLLOW	20	3
	27	1
SCREW/WATER PUMP	17	5
SEAL SET/WATER PUMP	17	2
SEAL,BEARING CAP	5	8
	25	8
SEAL,BEARING CAP/7	5	9
	25	9
SEAL,CYL.HEAD COVER	2	3
	25	4
SEAL,OIL	1	4
	5	14-A
	9	5
	25	2
	25	10
	25	12
SEAT,VALVE SPRING	11	4
SEAT/SPRING/LOWER	27	19
SEAT/SPRING/UPPER	27	17
SHAFT,CAM	12	1
SHAFT/ROCKERARM ASSY	11	10
SHAFT/STARTER PLANET	28	15
SHIM/INJECTIONPUMP	20	4
	20	5
	20	6
	20	7
SLEEVE/PLUNGER	27	16
SOLENOID	24	5
SPACER,PUMP.WATER	17	9
SPACER/FAN	18	3
	18	4
SPRING	11	14
	29	18
SPRING,RETURN	20	29
SPRING,STARTING	20	34
SPRING/DELIVERYVALVE	27	3
SPRING/GOVERNOR	20	24
SPRING/NOZZLEHOLDER	26	4
SPRING/PUMPPLUNGER	27	18
SPRING/RELIEF VALVE	9	27
SPRING/STARTERBRUSH	28	4
SPRING/VALVE	11	3
STARTER ASSY	23	7
STOPPER/FULLLOAD	9	14
STRAINER	16	6-A
STRAINER COMP	16	6
STUD	1	8
	4	4
	5	19
	5	20
	9	4
	9	4-A
STUD/M8X40	5	18
	17	11
SWITCH/MAGNETIC ASSY	28	20
SWITCH/OILPRESSURE	24	1
SWITCH/OVERHEAT	24	2
TAPPET	11	6
TAPPET/INJECTIO ASSY	27	14
THERMOSTAT	17	20
THRUSTPIECE	20	19
VALVE ASSY	27	7
VALVE/EXHAUST	11	2

Description	Fig.	Key
VALVE/INTAKE	11	1
VALVE/RELIEF ASSY	9	25
WASHER	19	2
	28	31
WASHER / M6	20	32
WASHER,SP/M 6	20	33
	24	8
WASHER,SP/M 8	9	41
	9	41-A
WASHER/0.9	26	7
WASHER/0.925	26	8
WASHER/0.95	26	9
WASHER/0.975	26	10
WASHER/08X14X01	9	13
	9	22
	25	22
WASHER/1.0	26	11
WASHER/1.025	26	12
WASHER/1.05	26	13
WASHER/1.075	26	14
WASHER/1.1	26	15
WASHER/1.125	26	16
WASHER/1.15	26	17
WASHER/1.175	26	18
WASHER/1.2	26	19
WASHER/1.225	26	20
WASHER/1.25	26	21
WASHER/1.275	26	22
WASHER/1.3	26	23
WASHER/1.325	26	24
WASHER/1.35	26	25
WASHER/1.375	26	26
WASHER/1.4	26	27
WASHER/1.425	26	28
WASHER/1.45	26	29
WASHER/1.475	26	30
WASHER/1.5	26	31
WASHER/1.525	26	32
WASHER/1.55	26	33
WASHER/1.575	26	34
WASHER/1.6	26	35
WASHER/1.625	26	36
WASHER/1.65	26	37
WASHER/1.675	26	38
WASHER/1.7	26	39
WASHER/1.725	26	40
WASHER/1.75	26	41
WASHER/1.775	26	42
WASHER/1.8	26	43
WASHER/1.825	26	44
WASHER/1.85	26	45
WASHER/1.875	26	46
WASHER/1.9	26	47
WASHER/1.925	26	48
WASHER/1.95	26	49
WASHER/14X23X1.5	7	7
WASHER/9X22X2	23	4
WASHER/AIR BLEEDER	20	2
	27	2
WASHER/SK	28	24
	28	25
	28	26
WATERPUMP ASSY	17	1
	17	1-A
YOKE/STARTER ASSY	28	1

Alpabetical Index

6004-097-480-10

Description	Fig.	Key
ADAPTER/255X065 ASSY	22	1
ARM/CONTROL	20	30
ARM/FLOATING COMP	20	20
ARM/TENSION	22	2
ARMATURE/STARTE ASSY	28	5
BALL	1	5
BEARING,RB/6004	20	14
BEARING,RB/6203	20	13
BEARING,THRUST CRANK	5	13
	6	2
	6	4
BEARING/BALL	20	14-A
	20	14-B
BEARING/CONNECTING R	6	5
	6	6
	13	7
BEARING/CRANK/LOWER	5	12
BEARING/CRANK/UPPER	5	11
BEARING/NEEDLE	28	8
	28	9
BEARING/OILLESS	28	12
	28	14
	28	16
BEARING/WITH SHOCKAB	28	13
BELT/VCOGA36.0	18	5
BELT/VNR5A36.0	18	5-A
BODY/NOZZLE HOLDER	26	2
BODY/OILPUMP	16	2
BOLT	1	7
	5	2
	9	35
	11	18
	16	5
	23	8
	24	7
BOLT,ADJUST	5	29
BOLT,JOINT	16	11
BOLT,SEMS/M10X20	8	3
BOLT,SEMS/M6X12	12	5
	20	16
BOLT,SEMS/M8X25 7T	4	3
BOLT/CONNECTINGROD	13	6
BOLT/CRANK	15	9
BOLT/FLANGE	15	7
BOLT/M6	9	29
BOLT/M6	9	30
BOLT/M6X10	20	18
BOLT/M6X18	20	26
BOLT/M8X20	9	36
	9	42
	20	8
BOLT/S	12	5-A
	16	5-A
	20	16-A
BOLT/THROUGH	28	30
BOLT/WASHERHEAD	27	10
BOLT/WS	16	4
BRACKET ROCKER SHAFT	11	12
BRACKET,ROCKER SHAFT	11	13
BRUSH/STARTER	28	2
CAMSHAFT/INJECTION P	20	10
CAP,BLANK/30	9	32
CAP,OIL FILLER	2	2
CAP,SEALING	1	2
CARTRIDGE/OILFILTER	16	13
CLAMP,STRAINER	16	8
CLAMP/WIRE/10-15	17	15
CLAMP/WORM/14-24	7	4
CLIP/HOSE/7.6-8.2	21	4
CLIP/HOSE/8.7-9.3	21	7
CLUTCH/STARTER ASSY	28	6
CONNECTINGROD ASSY	13	5
CONNECTOR,OIL FILTER	5	24
CONNECTOR/FUEL	21	1
CONNECTOR/GLOWPLUG	24	4
COVER	9	38
	28	11
COVER,INJ PUMP	5	25
COVER/CYLINDER HEAD	2	1
COVER/HYDRAULIC	9	38-A
CRANKSHAFT ASSY	15	1
	15	1-A
CUP/SEALING/12	5	7
CUP/SEALING/16	9	3
CUP/SEALING/28	5	3
CUP/SEALING/36	5	4
CUTTER,VALVE	11	5
CYLINDERBLOCK ASSY	5	1
	5	1-A
	5	1-B
CYLINDERBLOCK ASSY	5	1-C
	5	1-D
	5	1-E
CYLINDERHEAD ASSY	1	1
DOWEL	5	21
ELEMENT ASSY	27	9
FLANGEBOLT	3	3
	3	4
	5	27
	7	2
	9	6
	9	7
	9	9
	9	10
	9	11
	9	12
	9	37
	10	2
	11	19
	16	9
	17	7
	17	12
	17	18
	17	19
	17	23
	17	24
	18	2
	18	2-A
	23	3
	23	5
FLYWEIGHT	20	17
FLYWHEEL	15	5
FLYWHEEL ASSY	15	5-A
	15	5-B
FRAME/COMMUTATOR END	28	10
GASKET	2	5
	17	3
	24	6
	25	5
	25	21
GASKET,EXH.MANIFOLD	4	2
	25	7
GASKET,INLET MANIFOL	3	2
	25	6
GASKET,NOZZLE	19	3

Alpabetical Index

Description	Fig.	Key
GASKET, SPACER	17	10
	25	18
GASKET/COVER	5	26
	9	39
	25	11
GASKET/CYLINDERHEAD	1	6
	25	3
GASKET/DELIVERYVALVE	27	6
GASKET/GEARCASE	9	24
	25	14
GASKET/HOUSING	17	17
	25	19
GASKET/PLATE	9	34
	25	15
GASKET/WATER PUMP	17	6
	25	17
GEAR/CAMSHAFT	12	2
GEAR/CRANK	15	3
GEAR/IDLE ASSY	12	6
GEAR/INJECTIONPUMP	20	11
GEAR/STARTER PLANETA	28	17
GEAR/STARTERINTERNAL	28	18
GEARCASE ASSY	9	1
	9	1-A
	9	1-B
GENERATOR ASSY	23	1
GLOWPLUG	24	3
	24	3-A
GUIDE/LEVELGAGE COMP	5	32
	5	32-A
HANGER	10	1
HOLDER/DELIVERYVALVE	27	4
HOLDER/NOZZLE ASSY	26	1
HOLDER/STARTER ASSY	28	3
HOSE, RUBBER	21	5
HOSE/RUBBER	2	6
	17	14
HOSE/RUBBER/140	7	3
HOSE/RUBBER/160	21	3
HOUSING ASSY	27	8
	27	8-A
HOUSING/STARTER ASSY	28	7
HOUSING/THERMOSTAT	17	16
	17	16-A
INJECTIONNOZZLE ASSY	19	1
INJECTIONPUMP ASSY	20	1
	20	1-A
	20	1-B
JOINTT-TYPE	21	6
KEY/07X05X09	12	3
	20	12
KEY/07X05X43	15	4
LEVELGAGE	5	31
	5	31-A
LEVER(CONTROL) COMP	20	25
LEVER/PINIONDRIVE	28	19
MANIFOLD(INLET) ASSY	3	1
MANIFOLD/EXHAUST	4	1
METAL, CRANK SET	5	10
METAL, CRANK SET 050	6	1
METAL, CRANK SET 100	6	3
NIPPLE	5	22
NIPPLE COMP	7	5
NOZZLE ASSY	26	51
NUT	9	40
	9	40-A
	11	17
	26	50
	28	28
	28	29
	28	34
NUT, CAP/M 8	9	16
NUT/CAP	2	4
NUT/M 6	20	27
NUT/M08	9	8
	11	20
	17	8
	17	13
	20	9
NUT/M10	23	6
NUT/M6	5	30
	9	31
	20	31
NUT/M8	9	15
	28	32
NUT/NOZZLERETAINING	26	5
NUT/PINIONSTOP	28	23
OILPUMP ASSY	16	1
OILSEAL	5	14
O-RING	17	22
O-RING	25	20
ORING	27	5
O-RING/P 8	20	28
O-RING/P15	16	7
	25	16
PACKING	9	17
	16	12
	25	13
PAN, OIL COMP	7	1
PIECE, DISTANCE	26	6
PIN	5	17
	5	28
	9	20
	9	20-A
	15	2
PIN, CONTROL	20	22
PIN, GROOVE	9	23
PIN, NOZZLE HOLDER	26	3
PIN, PISTON	13	3
PIN/ARM	9	18
PIN/IDLEGEAR	5	6
PIN/INJECTIONPUMP	27	12
PIN/SNAP	9	19
PIN/STRAIGHT	5	16
	16	3
PIN/TUBE	5	15
PIPE, OIL	16	10
PIPE, WATER DRAIN	5	23
PIPE/FUEL	21	2
PIPE/INJECTION ASSY	19	4
	19	5
	19	6
PIPE/WATEROUTLET	17	21-A
PIPE/WATEROUTRET	17	21
PISTON	13	1
PISTON(OV) 78.7	14	1
PISTON(OV) 79.2	14	3
PISTON/VALVE/RELIEF	9	26
PLATE	27	13
	28	27
PLATE, THRUST	12	4
PLATE, THRUST INJPUMP	20	15
PLATE/ADJUST	23	2
PLATE/ADJUSTING	27	11
PLATE/FRONT	9	33

Alpabetical Index

6004-097-480-10

Description	Fig.	Key
PLATE/REAR	8	1
PLATE/TAPPET/AD 0.2	27	25
PLATE/TAPPET/AD 0.25	27	29
PLATE/TAPPET/AD 0.3	27	26
PLATE/TAPPET/AD 0.35	27	30
PLATE/TAPPET/AD 0.4	27	27
PLATE/TAPPET/AD 0.45	27	31
PLATE/TAPPET/AD 0.5	27	28
PLATE/TAPPET/AD 0.55	27	32
PLATE/TAPPET/AD 0.6	27	20
PLATE/TAPPET/AD 0.65	27	33
PLATE/TAPPET/AD 0.7	27	21
PLATE/TAPPET/AD 0.8	27	22
PLATE/TAPPET/AD 0.9	27	23
PLATE/TAPPET/AD 1.0	27	24
PLATE/WATER PUMP	17	4
PLUG	11	11
PLUG/PT1/2	1	3
PLUG/PT1/8	5	5
	5	5-A
	9	2
	9	2-A
PLUG/SCREW	9	21
PLUG/SCREW/M14X1.5	7	6
POINTER	8	2
PULLEY/CRANK	15	8
	15	8-A
	15	8-B
PULLEY/WATERPUMP	18	1
RACK/CONTROL ASSY	27	15
REPAIR/ENGINE SET	25	1
RING,SNAP	13	4
RING,SNAP/ 4 E	20	23
RING,SNAP/12 C	9	28
RING,SNAP/16 C	11	15
RING/PISTON SET	13	2
RING/PISTON/OV SET	14	2
	14	4
RING/SNAP	28	21
	28	22
RINGGEAR	15	6
RINK/CONTROL	20	21
ROCKERARM	11	9
ROCKERSHAFT ASSY	11	8
ROD,PUSH	11	7
SCREW	28	33
SCREW ADJUST	11	16
SCREW/HOLLOW	20	3
	27	1
SCREW/WATER PUMP	17	5
SEAL SET/WATER PUMP	17	2
SEAL,BEARING CAP	5	8
	25	8
SEAL,BEARING CAP/7	5	9
	25	9
SEAL,CYL.HEAD COVER	2	3
	25	4
SEAL,OIL	1	4
	5	14-A
	9	5
	25	2
	25	10
	25	12
SEAT,VALVE SPRING	11	4
SEAT/SPRING/LOWER	27	19
SEAT/SPRING/UPPER	27	17
SHAFT,CAM	12	1
SHAFT/ROCKERARM ASSY	11	10
SHAFT/STARTER PLANET	28	15
SHIM/INJECTIONPUMP	20	4
	20	5
	20	6
	20	7
SLEEVE/PLUNGER	27	16
SOLENOID	24	5
SPACER,PUMP.WATER	17	9
SPACER/FAN	18	3
	18	4
SPRING	11	14
SPRING,RETURN	20	29
SPRING,STARTING	20	34
SPRING/DELIVERYVALVE	27	3
SPRING/GOVERNOR	20	24
SPRING/NOZZLEHOLDER	26	4
SPRING/PUMPPLUNGER	27	18
SPRING/RELIEF VALVE	9	27
SPRING/STARTERBRUSH	28	4
SPRING/VALVE	11	3
STARTER ASSY	23	7
STOPPER/FULLLOAD	9	14
STRAINER	16	6-A
STRAINER COMP	16	6
STUD	1	8
	4	4
	5	19
	5	20
	9	4
	9	4-A
STUD/M8X40	5	18
	17	11
SWITCH/MAGNETIC ASSY	28	20
SWITCH/OILPRESSURE	24	1
SWITCH/OVERHEAT	24	2
TAPPET	11	6
TAPPET/INJECTIO ASSY	27	14
THERMOSTAT	17	20
THRUSTPIECE	20	19
VALVE ASSY	27	7
VALVE/EXHAUST	11	2
VALVE/INTAKE	11	1
VALVE/RELIEF ASSY	9	25
WASHER	19	2
	28	31
WASHER / M6	20	32
WASHER,SP/M 6	20	33
	24	8
WASHER,SP/M 8	9	41
	9	41-A
WASHER/0.9	26	7
WASHER/0.925	26	8
WASHER/0.95	26	9
WASHER/0.975	26	10
WASHER/08X14X01	9	13
	9	22
	25	22
WASHER/1.0	26	11
WASHER/1.025	26	12
WASHER/1.05	26	13
WASHER/1.075	26	14
WASHER/1.1	26	15
WASHER/1.125	26	16
WASHER/1.15	26	17
WASHER/1.175	26	18
WASHER/1.2	26	19
WASHER/1.225	26	20

Description	Fig.	Key	Description	Fig.	Key	Description	Fig.	Key
WASHER/1.25	26	21						
WASHER/1.275	26	22						
WASHER/1.3	26	23						
WASHER/1.325	26	24						
WASHER/1.35	26	25						
WASHER/1.375	26	26						
WASHER/1.4	26	27						
WASHER/1.425	26	28						
WASHER/1.45	26	29						
WASHER/1.475	26	30						
WASHER/1.5	26	31						
WASHER/1.525	26	32						
WASHER/1.55	26	33						
WASHER/1.575	26	34						
WASHER/1.6	26	35						
WASHER/1.625	26	36						
WASHER/1.65	26	37						
WASHER/1.675	26	38						
WASHER/1.7	26	39						
WASHER/1.725	26	40						
WASHER/1.75	26	41						
WASHER/1.775	26	42						
WASHER/1.8	26	43						
WASHER/1.825	26	44						
WASHER/1.85	26	45						
WASHER/1.875	26	46						
WASHER/1.9	26	47						
WASHER/1.925	26	48						
WASHER/1.95	26	49						
WASHER/14X23X1.5	7	7						
WASHER/9X22X2	23	4						
WASHER/AIR BLEEDER	20	2						
	27	2						
WASHER/SK	28	24						
	28	25						
	28	26						
WATERPUMP ASSY	17	1						
	17	1-A						
YOKE/STARTER ASSY	28	1						

Alpabetical Index

5345-097-100-00

Description	Fig.	Key
ARMATURE	11	11
ARM-GOVERNOR	7	9
ARM-PIVOT	7	6
ARM-ROCKER	3	5
BALL-STEEL	4	18
BAND	6	23
	6	24
BEARING-PLATE	1	23
BOLT	1	24
	7	12
	7	13
	8	43
	9	11
	9	12
	11	15
BOLT, 6X12	7	21
BOLT, 6X20	5	23
BOLT, 6X40	5	22
BOLT, 7X35.2	2	12
	2	13
BOLT, 8X110	8	26
BOLT, 8X45	1	25
BOLT-FLANGED, 5X20	6	29
BOLT-FLANGED, 6X12	4	16
	6	30
BOLT-FLANGED, 6X14	6	31
BOLT-FLANGED, 6X16	7	25
BOLT-FLANGED, 6X20	5	25
	5	27
	6	32
	8	44
BOLT-FLANGED, 6X25	1	28
	6	35
BOLT-FLANGED, 6X30	7	26
BOLT-FLANGED, 6X45	5	28
	8	45
BOLT-FLANGED, 6X65	5	29
BOLT-FLANGED, 6X75	5	30
BOLT-FLANGED, 8X12	1	30
BOLT-FLANGED, 8X16	1	29
	5	26
BOLT-FLANGED, 8X30	11	19
BOLT-FLANGED, 8X35	6	33
BOLT-FLANGED, 8X50	6	34
BOLT-FLANGED, 8X60	1	32

Description	Fig.	Key
BOLT-FLANGED, 8X65	1	31
BOLT-FLANGED, 8X70	5	31
BRACKET	5	3
	7	1
	9	5
	9	6
	10	1
BRACKET, COOLINF FAN	5	2
BREATHER-BRAKE	8	21
BRUSH	11	9
CAMSHAFT, VALVE	3	8
CAP	5	1
	11	1
CAP, SPARK PLUG	6	6
CAP-OIL FILLER	4	5
CARBURETOR-ASSY	8	6
CASE-AIR FILTER	9	1
	9	2
CASE-PUMP	5	18
CASE-ROCKER	1	5
	1	6
CHAMBER-FLOAT	8	8
CLAMP	1	26
	5	19
	6	20
	6	27
	8	34
	10	6
	10	7
	10	8
CLUTCH ASSY	11	2
COIL, HOUSING	6	13
COIL, IGNITION	6	5
COIL-CHARGING	6	14
COLLAR	6	18
	6	19
	7	17
	8	30
	8	31
	8	32
	9	10
COLLAR, 6X13X2.3	7	16
COLLAR, 8.5X14X25.5	6	25
COLLAR, 8.5X14X7.5	6	26
COLLET	3	4

Description	Fig.	Key
COVER	1	11
	5	8
	11	5
COVER ASSY	11	8
COVER, OIL PUMP	4	4
COVER-ASSY	11	7
COVER-CRANKCASE	1	14
COVER-FLYWHEEL	6	2
COVER-PUMP	5	9
CRANKCASE-COMP	1	15
CRANKSHAFT ASSY	2	8
ELEMENT, AIR FILTER	9	4
ELEMENT, AIR-FILTER	9	3
FAN, COOLING	5	15
FILTER OIL	4	8
FILTER, FUEL	10	2
FILTER-OIL	4	9
FLOAT	8	11
FLYWHEEL-ASSY	6	7
GASKET	8	1
	8	2
	8	5
	9	8
GASKET, 16X24X1	6	1
GASKET, 8.2X12X1	1	4
GASKET, BREATHER, COVE	1	7
GASKET, CASE-ROCKER	1	9
GASKET, CRANKCASE COV	1	8
GASKET, DRAIN PLUG	4	1
GASKET, HEAD	1	1
GASKET, INTAKE MANIFO	8	3
	8	4
GASKET, MUFFLER	9	7
GASKET, PUMP CASE	5	5
GASKET, PUMP COVER	5	6
GASKET, THERMOSTAT CO	5	4
GAUGE	4	10
GEAR-SPUR	2	9
	4	11
	5	16
GOVERNOR-ASSY	7	10
HARNESS	6	8
	6	9
HEAD, CYLINDER	1	2
HEAD, CYLINDER COMP	1	3

Alpabetical Index

Description	Fig.	Key
HOLDER	11	3
HOLDER-MAIN JET	8	24
HOSE-COOLING	5	10
IGNITOR	6	4
IMPELLER	5	17
INSULATOR	8	17
	11	6
JET-AIR #1.1	8	13
JET-AIR #1.6	8	12
JET-MAIN,#17.5	8	38
JET-PILOT,#52.5	8	39
JOINT	1	16
	10	4
KEY	2	11
	6	38
LABEL	12	1
LABEL-MANUAL	12	2
LEVER	11	4
LEVER-COMP	7	2
	7	3
LIMITER	8	20
LINK	7	4
	7	5
MANIFOLD-INTAKE	8	25
MUFFLER-COMP	9	9
NOZZLE-MAIN	8	22
	8	23
NUT	3	13
	6	16
	7	15
	10	5
	11	16
	11	17
NUT-HEX,5MM	7	28
NUT-HEX,6MM	7	27
	9	13
NUT-HEX-SMALL,8MM	11	20
O RING	5	33
O RING,10MM	1	33
O RING,11MM	4	19
O RING,25MM	4	20
O-RONG	8	36
PANEL-COMP-CONTROL	7	11
PIN	1	19
	1	20
PIN	4	12
	5	20
	8	35
PIN-DOWEL	2	14
	5	32
PIN-PISTON	2	2
PIPE,OIL GAUGE	1	13
PIPE-INTAKE	8	16
PISTON	2	5
PISTON-ENGINE	2	1
PLATE	1	10
	4	3
PLUG	6	22
PLUG,DRAIN	4	14
PUMP-WATER	5	12
PUSHROD	3	9
REGULATOR-VOLTAGE	6	3
RELAY	6	12
RESERVOIR	5	11
RETAINER,SPRING	3	10
RETAINER,VALVE SPRIN	3	3
RING PISTON SET	2	4
RING SET	2	3
RING SNAP/S12	3	15
RING, SNAP	8	33
RING,SNAP	11	18
RING-O	4	13
RING-SNAP	2	10
ROD-ASSY-CONNECTING	2	6
	2	7
ROTOR,PUMP	4	7
ROTOR-PUMP,IN	4	6
SCREW	1	18
	3	12
	4	17
	6	36
	6	37
	8	27
	8	28
	10	11
SCREW,5X30	7	14
SCREW,6X25	6	15
SCREW-PAN+-,4X14	8	46
SCREW-PILOT AIR	8	7
SEAL	8	42
SEAL,OIL/IS 10X20	5	21
SEAL,OIL/ISD34X5	1	21
SEAL-MECHANICAL	5	14
SEAL-OIL	3	14
SEAL-OIL,VC 8X12X2.5	1	22
SHAFT	5	7
SHAFT,OIL PUMP	4	2
SHAFT-CARBURETOR	8	14
	8	15
SHAFT-ROCKER	3	6
SLEAVE	7	8
SOLENOID ASSY	8	19
SPRING	3	11
	4	15
	7	18
	7	19
	7	20
	8	40
	8	41
SPRING BRUSH	11	10
SPRING-GOVERNOR	7	7
STARTER-ELECTRIC	11	12
STOPPER	11	14
STUD	1	17
SWITCH	6	10
	6	11
	11	13
TAP ASSY	10	3
TAPPET	3	7
THERMOSTAT	5	13
TUBE	1	27
	8	47
TUBE 5.8X10.8X140	10	9
TUBE 5X10X700	10	10
TUBE,5X6X75	6	21
	8	37
VALVE	1	12
	8	18
VALVE,EXHAUST	3	2
VALVE,FLOAT	8	10
VALVE-INTAKE	3	1
VALVE-THROTTLE #100	8	9
WASHER	5	24
	6	17
	6	28

Alpabetical Index

5345-097-100-00

Description	Fig.	Key	Description	Fig.	Key	Description	Fig.	Key
WASHER	7	22						
	7	23						
	8	29						
WASHER,6X28X1.6	7	24						
WASHER-PLAIN,6MM	7	29						
WASHER-SPRING,6MM	9	14						
WASHER-SPRING,8MM	11	21						

Description	Fig.	Key
ACTUATOR ASSY	94	2
ADAPTER	61	35
	62	33
	63	38
ADAPTER(90ß/PUMP)	61	27
	62	25
	63	30
ADAPTER/G3/816 ASSY	14	2
	15	2
	16	2
	16	2-A
	17	2
	17	2-A
	75	12
	75	12-A
ADAPTER/L/PF1/4 ASSY	76	9
ADAPTER/L/R1/8	61	25
	62	24
	63	29
ADAPTER/PF1/4 ASSY	75	8
	76	7
ADAPTER/RC1/4	61	34
	62	32
	63	37
ADAPTER/T/RETURN/Z	61	29
	62	27
	63	32
ADAPTOR/3X8	22	11
ADAPTOR/G3/8XM16ASSY	59	4
ADJUSTER	151	53
ADPTER	61	2
	62	2
	63	2
ADPTER/90ß G1/2	59	3
ADPTER/G1/4.1/4	75	10
ARM LH	193	16
	194	15
	195	16
	196	15
ARM(LEVER/ROTAR/8)CO	112	33
ARM,BLOWER	162	30
ARM,BRAKE	52	6
ARM,CHANGE/COUNTER	13	32
ARM,CLUTCH	151	15
	151	17
ARM,CONNECTION	151	66
ARM,PITMAN/6HG	38	17
ARM,PLANTING/E/LH	193	22
	195	22
ARM,SEEDING TANK/8/I	145	18
	146	8
ARM,SEEDING-CLUTCH	71	10
	72	8
ARM,SEEDING-TANK	145	15
	146	3
ARM,SENSOR/STERRING	38	31
ARM,STERRING SHAFT	38	23
ARM,STOPPER	72	11
ARM/	191	12
	192	12
ARM/ACCELERATOR COMP	20	9
	20	9-A
	20	9-B
	21	11
	21	11-A
	21	11-B
ARM/ACCELERATOR/8E	13	14
ARM/ACCELERATOR/BACK	20	8
	20	8-A
	20	8-B
	21	10
	21	10-A
	21	10-B
ARM/BRAKE/COUNTER	56	35
ARM/BRAKE/LH ASSY	56	2
ARM/BRAKE/P	53	6
ARM/CLUTCH/8LH	151	19
ARM/CLUTCH/8RH	151	20
ARM/COUNTER/L	160	70
ARM/COUNTER/R	160	71
ARM/DRIVE/8 COMP	160	29
ARM/DRIVE/PZ	67	17
	69	17
ARM/ELECTRIC MARKER/	141	20
	141	20-A
	141	21
	141	21-A
ARM/EXHAUST/LH	162	52
ARM/FLOATSENSE/ COMP	119	6
ARM/HST/NEUTRAL COMP	55	24
ARM/LEVER/ROTOR/8	113	34
ARM/MOTOR/PLANT	71	12
	72	13
ARM/PLANTING CLUTCH/	73	8
	73	8-A
	74	9
	74	9-A
ARM/PUSH-OUT/PZ	193	38
	194	37
	195	38
	196	37
ARM/PZ/8	160	77
ARM/ROTARY COMP	112	24
	113	23
ARM/SEEDING TANK/8/O	145	50
	146	33
ARM/SEEDLING FEED/CO	151	66-A
ARM/SEEDLING TANK/8E	146	3-A
ARM/SENSOR/ROLLING/8	128	9
ARM/TENSION COMP	17	24
ARM/TENSION/FD COMP	9	5
ARM/TENSION/W	15	24
	17	24-A
ARM/TRANION	18	1
ARM/TRUNNION/8	19	1
ARM/TRUNNION/HMS1/00	192	12-A
BACKMIRROR SET	89	1
BALL	34	3
	67	36
	67	43
	68	32
	68	39
	69	36
	69	43
	70	32
	70	39
	189	8
BALL,STAINLESS	173	13
BAND	38	27
	66	7
	73	20
	74	21
	98	20
	98	20-A
	99	16

Alpabetical Index

2213-097-110-10

Description	Fig.	Key
BAND	99	18
	99	18-A
	100	20
	100	20-A
	101	14
	101	16
	101	16-A
	102	2
	103	2
	117	3
	117	3-A
	117	4
BAND,WIRE/140	11	24
	61	16
	61	26
	72	31
	96	8
	97	8
	98	19
	99	17
	100	19
	101	15
	103	3
	110	50
	132	4
	163	2
	163	4
	164	9
	167	31
	170	9
	171	9
	173	10
BAND,WIRE/170	6	9
	12	17
	61	40
	62	38
	63	43
	98	21
	100	21
	163	10
BAND/202	102	5
BAND/WIRE/250	61	22
	62	21
	63	24
	121	22

Description	Fig.	Key
BAND/WIRE/250	147	9
	172	22
BAR,STOP/PG83H	130	5
BASE/CAM/AROUND TURN	40	6
BASE/CLUTCH/LH	173	1
BASE/CLUTCH/RH	173	2
BASE/DISCHARGE COMP	162	8
BASE/ENGINE/G/K COMP	7	1
BASE/FRAM/8/LH	166	18
BASE/FRAME/8/LH COMP	166	18-A
BASE/FRAME/8/RH	166	19
BASE/FRAME/8/RH COMP	166	19-A
BASE/MOTOR COMP	141	18
BASE/MOTOR/8 COMP	72	1
	72	1-A
BASE/SPRING	190	3
BASE/TOTALCLUTC COMP	173	19
	173	19-A
BATTERY	104	4
BATTERY/55B24R/ ASSY	103	6
BATTERYSTAY COMP	5	9
	103	7
	104	5
	132	2
BEARING	28	6
	38	3
	113	16
	118	5
	145	63
	146	46
	160	76
	191	37
	192	37
BEARING,RB 6006	28	10
BEARING,RB/6001	120	21
	193	13
	195	13
BEARING,RB/6002	114	14
	193	14
	194	13
	195	14
	196	13
BEARING,RB/6002SS	121	6
	160	2
BEARING,RB/6003	114	10

Description	Fig.	Key
BEARING,RB/6003	131	14
BEARING,RB/6003SS	191	38
	192	38
BEARING,RB/6004	52	2
	53	2
	67	12
	67	30
	68	13
	68	26
	69	12
	69	30
	70	13
	70	26
BEARING,RB/6005	193	5
	194	5
	195	5
	196	5
BEARING,RB/6005SS	120	35
BEARING,RB/6006SS	15	20
	17	20
	117	6
BEARING,RB/6009	41	9
	42	9
BEARING,RB/6201	110	22
	194	12
	196	12
BEARING,RB/6202	31	5
	32	5
	67	26
	68	22
	69	26
	70	22
BEARING,RB/6202RS	40	2
BEARING,RB/6202SS	38	4
	120	38
BEARING,RB/6203	23	2
	24	2
	26	4
	27	2
	54	16
	110	23
	120	22
	131	30
BEARING,RB/6203SS	38	8
BEARING,RB/6204	28	14

Alpabetical Index

Description	Fig.	Key
BEARING,RB/6204	54	11
	191	14
	192	14
BEARING,RB/6205	23	3
	24	3
	29	10
	30	9
	38	11
	41	3
	42	3
BEARING,RB/6206	30	11
	54	19
BEARING,RB/6208	54	20
BEARING,RB/62132	120	5
BEARING,RB/6301	31	2
	31	4
	32	2
	32	4
BEARING,RB/6301SS	38	21
BEARING,RB/6302	68	15
	70	15
BEARING,RB/6303	25	4
	25	5
	26	5
	27	4
	118	10
BEARING,RB/6304	28	2
	33	2
	54	17
BEARING,RB/6305	41	23
	42	22
	44	2
BEARING,RB/6306	43	3
	44	3
BEARING/BALL	41	12
	41	24
	42	12
	42	23
	141	24
	160	63
BEARING/BALL 6305SH2	41	23-A
	42	22-A
	43	2
BEARING/BALL/6304SH2	28	2-A
BEARING/LEED CAM/PP	121	4
BEARING/THRUST	191	13
	192	13
BELT/PLANT/PZ	151	8
BELT/VB048	14	20
	16	20
BELT/VB052/HP-1 SET	15	31
	17	31-A
BELT/VB052/HP-X	17	31
BLOCK/CYLINDER	191	3
	192	3
BLOCK/PORT	191	2
	191	2-A
	192	2
BLOWER/FG/B	167	1
BLOWER/FZ/B ASSY	167	1-A
	167	1-B
	167	1-C
BOLT	3	4
	4	10
	22	5
	27	7
	29	8
	34	4
	35	3
	43	6
	44	6
	55	4
	71	16
	72	19
	72	26
	111	8
	113	20
	121	19-A
	128	6
	141	42
	148	29
	149	29
	160	54
	160	60
	162	2
	162	9
	162	20
	162	41
	162	45
	163	11
BOLT	163	20
	163	21
	164	2
	164	6
	165	3
	166	2
	166	21
	166	39
	166	41
	167	19
	167	20
	167	27
	169	4
	169	36
	169	65
	170	5
	171	5
	172	17
	173	3
	174	4
	174	13
	175	4
	175	13
	193	45
	194	44
	195	45
	196	44
BOLT (S)/M10X45	182	8
BOLT M10X30	9	3
	51	7
BOLT SET/M10X68	180	3
BOLT(M8X25/9T)	38	15
BOLT(S) M10X25	90	14
BOLT(S) M10X30	76	4
BOLT(S) M8X45	111	27
BOLT(SP)/M6X16	13	28
	13	38
	20	10-A
	28	19
	71	2
	72	2
	73	5
	74	5
	98	23
	99	20

Alpabetical Index

2213-097-110-10

Description	Fig.	Key
BOLT(SP)/M6X16	100	23
	101	18
	107	5
	121	36
	128	14
	129	4
	150	21
	190	21-A
BOLT,KNOB(M6)	150	6
	150	39
	166	53
BOLT,SEMS	3	21
	5	34
	6	16
	12	16
	15	17
	17	17
	20	10
	21	12
	67	54
	68	50
	69	54
	70	50
	79	23
	80	20
	81	22
	82	21
	110	10
	110	36
	118	23
	145	62
	146	45
BOLT,SEMS (SP)	18	10
	19	10
	87	3
	111	22
	112	43
	113	44
	141	19
	160	28
	166	29
BOLT,SEMS (S) M8X12	147	7
BOLT,SEMS (S) M8X16	3	23
	4	21
	40	7

Description	Fig.	Key
BOLT,SEMS (S) M8X16	55	18-A
	61	4
	61	18
	62	4
	62	17
	63	4
	65	8
	65	8-A
	86	15
	87	6
	111	13
	111	15
	111	17
	112	10
	112	12
	112	22
	113	10
	113	12
	113	22
	118	20
	131	24
	131	32
	141	50
	160	32
BOLT,SEMS/M8X20	129	6
BOLT,SEMS/M8X25 7T	67	48
	68	44
	68	53
	69	48
	70	44
	70	53
	90	3-A
	110	3
	160	78
BOLT,SEMS/M8X45 7T	54	4
BOLT/(S)M8X55	28	17
BOLT/10X16/PQ	67	39
	67	46
	68	35
	68	42
BOLT/8X20	47	7
	48	7
BOLT/M 5X12	141	46
BOLT/M 6X12	151	39
	151	64

Description	Fig.	Key
BOLT/M 6X16	105	13
	106	13
	107	11
	151	59
BOLT/M 6X25	145	28
	145	47
	146	18
	146	30
BOLT/M 6X30	111	39
	151	25
	151	49
BOLT/M 6X40	61	36
	62	34
	63	39
BOLT/M 8X25	115	17
	116	20
BOLT/M 8X35	93	4
	140	2
BOLT/M 8X55	75	3
BOLT/M 8X60	92	4
BOLT/M 8X65	92	4-A
BOLT/M 8X80	57	2
BOLT/M10X12	34	4-A
	69	39
	69	46
	70	35
	70	42
BOLT/M10X130	121	27
	121	27-A
	121	27-B
BOLT/M10X140	14	7
	15	7
	16	7
	17	7
BOLT/M10X20	161	15
BOLT/M10X25	117	2
BOLT/M10X26	38	20
BOLT/M10X30	76	5
	117	7
BOLT/M10X35	41	15
	41	15-A
	42	15
	42	15-A
	178	6
	180	9

Alpabetical Index

Description	Fig.	Key
BOLT/M10X40	41	18
	182	3
BOLT/M10X45	38	18
BOLT/M10X75	14	8
	15	8
	16	8
	17	8
BOLT/M12X40	37	3
	178	3
	181	3
	182	14
BOLT/M12X45	36	3
	45	3
BOLT/M4X14/SUS	197	39
	198	33
BOLT/M4X20/SUS	197	38
	198	32
BOLT/M5X12/SP/STAINL	149	43
BOLT/M6X16	112	20
	190	21
	193	41
	194	40
	195	41
	196	40
BOLT/M6X16/SP/SUS	166	45
	166	57
BOLT/M6X16X16	4	19
	11	17
	88	4
	88	10
	96	39
	97	39
	184	4
BOLT/M6X2	167	4
	167	4-A
BOLT/M6X20	104	6
	161	16
BOLT/M6X36	111	8-A
BOLT/M8X12	22	12
BOLT/M8X16	46	3
BOLT/M8X16/SUS	160	14
BOLT/M8X20	52	8
	161	13-A
	162	45-A
	166	15
BOLT/M8X20	166	20-A
	173	16-A
BOLT/M8X20/SP/S	193	44
	194	43
	195	44
	196	43
BOLT/M8X20/SUS	160	57
	161	13
	166	8
	173	16
BOLT/M8X25/SUS	166	46
BOLT/M8X30	160	35-A
	165	3-A
BOLT/M8X35/S	29	8-A
	30	8
BOLT/M8X45/7T	67	18
	69	18
BOLT/M8X45/SUS	160	35
BOLT/M8X75	160	52
BOLT/S	3	22
	3	30
	5	8
	5	35-A
	6	6
	8	2
	14	17
	15	19
	16	17
	17	19
	17	19-A
	22	4
	38	24-A
	38	28
	47	9
	48	11
	53	8
	55	18
	56	4
	63	20
	67	4
	68	5
	69	4
	70	5
	74	8
	79	27
BOLT/S	81	26
	82	25
	86	5
	87	3-A
	88	13
	110	9
	110	32
	112	4
	113	4
	113	27
	118	22
	118	27
	118	29
	118	31
	118	34
	118	37
	118	39
	118	42
	121	5
	121	17
	128	16
	130	3
	131	3
	133	5
	133	5-A
	133	6
	133	6-A
	134	5
	134	6
	145	30
	146	20
	148	15
	148	26
	148	33
	149	15
	149	26
	149	33
	150	2
	151	63
	189	17
BOLT/S M6X10	38	24
	141	40
BOLT/SEAL	118	16
BOLT/SEAL/M10X30/S	9	3-A
	51	7-A

Alpabetical Index

2213-097-110-10

Description	Fig.	Key
BOLT/SEAL/M10X35/S	41	15-B
	42	15-B
BOLT/SEAL/M6X16	121	14
BOLT/SEAL/M8X30X9T	43	6-A
	44	6-A
BOLT/SP	4	1
	4	4
	4	15
	6	6-A
	11	27
	13	9
	18	2
	18	6
	19	2
	19	6
	47	6
	48	6
	48	9
	48	11-A
	55	19
	55	21
	55	29
	56	31
	58	2
	58	6
	63	19
	67	55
	67	56
	68	51
	68	54
	69	55
	69	56
	70	51
	70	54
	71	14
	72	15
	78	2
	79	13
	79	19
	79	25
	79	32
	79	34
	80	13
	80	22
	80	27
BOLT/SP	81	13
	81	18
	81	24
	81	30
	81	32
	82	13
	82	23
	82	30
	83	2
	83	4
	84	2
	84	4
	84	7
	85	2
	85	4
	88	21
	89	12
	90	3
	98	24
	99	21
	100	24
	105	5
	106	5
	108	2
	108	6
	110	26
	111	28
	111	43
	115	3
	115	15
	116	3
	116	12
	116	18
	122	3
	122	6
	123	3
	124	3
	125	3
	126	3
	129	2
	133	9
	133	10
	133	14
	134	9
	134	10
BOLT/SP	134	14
	135	4
	135	7
	136	4
	136	13
	137	4
	137	13
	138	4
	138	13
	139	4
	139	13
	141	50-A
	145	16
	145	21
	145	27
	145	46
	145	52
	145	61
	145	66
	145	68
	145	78
	146	5
	146	5-A
	146	11
	146	17
	146	29
	146	35
	146	44
	146	49
	146	51
	146	61
	150	4
	150	10
	150	14
	150	20
	150	35
	151	37
	166	1
	166	20
	168	2
	194	54
	196	54
BOLT/TENSIONER/M10X3	131	33
BOLT/WING	150	39-A
BOOT	64	7

Alpabetical Index

Description	Fig.	Key
BOOT	96	21
	97	21
	105	3
	106	3
	107	3
	109	12
	121	8
	151	34
	163	27
	166	32
BOOT,COUPLING/A	50	5
BOOT,COUPLING/B	50	6
BOOT,DRIVE SHAFT	49	4
BOOT/EXHAUST/Z1	161	21
BOOT/EXHAUST/Z3	161	22
	161	25
BOOT/EXHAUST/Z4	161	26
BOOT/EXHAUST/Z5	161	23
BOOT/EXHAUST/Z6	161	24
BOOT/LEADCAM/E18	121	8-A
BOOT/SHAFT	67	49
	68	45
	69	49
	70	45
	110	4
BOOTS/ROTOR/DRIVE	110	4-A
BOSS,EXTENSION MARKE	93	7
BOSS/EXTENSION	182	2
BOX/RELAY/PZ	108	5
BRACKET	38	26
BRACKET/ENGINE/A	3	1
BRACKET/ENGINE/B	3	2
	3	2-A
BRACKET/ENGINE/C	3	3
BRACKET/LH	160	50
BRACKET/RESERVETANK	5	33
BRACKET/RH	160	51
BRACKET/ROLLING/8	118	15
BRACKET/ROTARY COMP	112	27
	113	26
BRACKET/SEAT/PZ/8	86	4
	86	4-A
	87	2
	87	2-A
BRAKE/8 ASSY	27	5

Description	Fig.	Key
B-RIVET/ALMI	145	12
BRUSH	169	7
	169	39
	177	1
BULB	96	4
	97	4
BULB/12V 20W	147	2
BULB/12V18W	95	2
BULB/12V8W	92	3
BULB/LAMP/12V/1.7W	96	3
	97	3
BULB/LAMP/12V1W	96	35
	97	35
BUMPER/WEIGHT/1 COMP	58	5
	58	5-A
BUMPER/WEIGHT/PZ/8	58	1-A
BUMPER/WEIGHT/PZ/D	58	1
BUSH	64	15
	151	28
	151	67
	151	68
BUSH, FEEDING DRIVE	169	75
BUSH,ARM COUNTER	160	73
BUSH,COLUMN	55	2
BUSH,EXHAUST LEVER	169	26
	169	58
BUSH,GEAR	169	14
	169	46
BUSH,SEEDING OUT	151	47
BUSH,SEEDLING	132	11
	151	24
	151	27
	169	79
BUSH,SEEDLING,FEED	151	44
BUSH/08X18X35	193	25
	194	24
	195	25
	196	24
BUSH/10X12X20	162	17
	162	31
	162	50
BUSH/12X14X15	160	12
BUSH/12X20X17	151	60
BUSH/15X17X15	15	30
	17	30

Description	Fig.	Key
BUSH/15X17X16	56	3
BUSH/15X17X20	141	28
BUSH/17X19X10	121	26
BUSH/17X19X15	131	13
BUSH/17X28X19	169	19
	169	51
BUSH/18X21X25	65	2
BUSH/19X35X20	55	3
BUSH/22X25X20	169	71
BUSH/22X25X25	121	24
BUSH/24X27X25	121	21-A
BUSH/68X71X14	191	17
	192	17
BUSH/95X100X22	191	16
	192	16
BUSH/F/10X12X15	13	11
	13	33
BUSH/ROTER	111	18
BUSH/SEEDLING FEED/C	151	36
BUSH/SEEDLING/LONG	151	29
BUZZER	96	5
	97	5
BUZZERASSY	105	9
	106	9
	107	7
CABLE(AZE CLUTCH/5/S	109	18
CABLE,CLUTCH/ROTER	110	44
CABLE/ACCEL	21	1
CABLE/BATTERY/300	103	4
CABLE/BRAKE	56	56
CABLE/CHOCK/FD	21	3
CABLE/CLUTCH/8/SIDE	109	17
CABLE/CLUTCH/PZ	72	29
CABLE/FERTILIZE/8	173	9
CABLE/HOPPER/F	197	17
	198	15
CABLE/MARKER/8/LH	141	36
CABLE/MARKER/8/RH	141	37
CABLE/PZ/G	173	8
CABLE/SEEDLING SLIDE	109	20
CABLE/THROTTLE/D	20	1
CABLE/VELOCITY/RESTR	73	16
	74	17
CAM	193	11
	195	11

Alpabetical Index

2213-097-110-10

Description	Fig.	Key
CAM/CABLE/ROTARY/8	110	38
CAM/ELECTRIC MARKER	141	27
CAM/HST/8	13	10
CAM/LEAD/PZ8	121	1
	121	1-A
CAM/PUSHED OUT/LH	193	19
	194	18
CAM/PUSHED OUT/RH	195	19
	196	18
CAM/PZ8/E12	121	11
CAM/SWING	111	38
CAM/SWITCH	141	29
CAP	5	26
	6	2
	93	6
	112	6
	113	6
	115	5
	115	10
	116	5
	116	10
	173	23
	174	17
	175	17
CAP 32X7	160	3
CAP,BLANK/30	68	3
	70	3
CAP,DUCT/EXHAUST	162	6
CAP,METAL	41	14
	42	14
CAP,MOTOR	167	3
CAP,OIL/30	22	3
CAP,RUBBER	96	33
	97	33
CAP,SHUTTER	161	3
CAP/08	79	4
	80	4
	81	4
	82	4
	115	13
	116	16
	136	7
	136	17
	137	7
	137	17

Description	Fig.	Key
CAP/08	138	7
	138	17
	139	7
	139	17
	141	48
CAP/10	59	7
	110	27
	114	18
	114	24
	146	7
	146	27
	193	18-A
	194	17
	195	18-A
	196	17
CAP/20	161	10
CAP/20/PZ	11	7
CAP/22X30	75	6
CAP/30	161	27
CAP/35	31	8
	32	8
	38	6
	68	14
	70	14
CAP/35/YELLOW	22	7
CAP/BL	96	28
	97	28
CAP/BUMPER	58	3
CAP/D6/YELLOW	92	6
	147	8
CAP/FRONTWHEEL/PZ80	46	1
CAP/FUSE BOX	98	4
	99	4
	100	4
	101	4
CAP/GREEN/8	109	5
CAP/OR	96	29
	96	44
	97	29
	97	44
	163	33
CAP/STAND	142	6
CAP/STEERING	55	14
CAP/SWITCH	13	2
CAP/TANK/NONLEA ASSY	11	9

Description	Fig.	Key
CAP/TANK/NONLEA ASSY	11	9-A
	12	6
	12	6-A
CAP/YELLOW/10/KNOB	194	38
	196	38
CAP/YELLOW/12	193	39
	195	39
CARTRIDGE ASSY	75	7
CASE	191	1
CASE,ROTER/INCOME	114	6
CASE,SHUTTER	161	2
CASE/CHAIN/8/LH ASSY	114	1-B
CASE/CHAIN/8/RH ASSY	114	19-B
CASE/CHAIN/LH ASSY	114	1
	114	1-A
CASE/CHAIN/RH ASSY	114	19
	114	19-A
CASE/FINAL/UPPER/8	41	1
	41	1-A
	41	1-B
	42	1
	42	1-A
	42	1-B
CASE/FRONT/DEFF	29	1
CASE/HMS1/019	192	1
CASE/HOLDER/TRANSPLA	131	1
	131	1-A
CASE/IN/8/RH	54	1
CASE/OUTO/8D	54	5
CASE/PLANT/CLUTCH	67	1
	68	1
	69	1
	70	1
CASE/REAR/IN/ROTARY/	54	2
CASE/REAR/OUT/8D	54	5-A
CASE/ROTARY/8	110	7
	110	7-A
CASE/ROTARY/IN/E	194	2
	196	2
CASE/ROTARY/IN/LH	193	2-A
CASE/ROTARY/IN/RH	195	2-A
CASE/ROTERY/INNER/LH	193	2
CASE/ROTERY/INNER/RH	195	2
CASE/ROTERY/OUT/LH	193	1
	194	1

Description	Fig.	Key
CASE/ROTERY/OUT/RH	195	1
	196	1
CASE/ROWER/8/LH	41	19
	42	18
CASE/ROWER/8/RH	41	20
	42	19
CASE/SPRING/LOWER	64	14
CASE/SPRING/UPPER	64	1
CASE/SUPPORT/8	131	2
	131	2-A
CASE/TRANSMISSION/8/	22	2
	22	2-A
	22	2-B
CASE/TRANSMISSION/LH	22	1
	22	1-A
CASE/TRANSPLANT/CENT	118	18
	118	18-A
CASE/TRANSPLANT/SIDE	118	30
	118	30-A
CASE/UETUKE/LH	118	21
	118	21-A
CASE/UETUKE/SIDE	118	33
	118	33-A
CASING/IN/FZ	167	7-A
CASING/INNER	167	7
CASING/OUT/FZ	167	8-A
CASING/OUTER/PG	167	8
CATCH/LEAD/E18	121	20-A
CAUPSULE,LOWER	169	2
	169	34
CAUPSULE,UPPER	169	1
	169	33
CAVER/LEADINGTHEWIND	63	18
CHAIN,MID COMP	131	18
CHAIN/ROLLER/41X034	110	17
CHBE/MARKER/LH/ COMP	141	1
	141	1-A
CHBE/MARKER/RH/ COMP	141	2
	141	2-A
CHUTE/TAKE OUT	162	7
CLAMP	5	31
	148	14
	149	14
CLAMP,HARNESS	14	11
	15	11
CLAMP,HARNESS	16	11
	17	11
	41	17
	41	17-A
	42	17
	42	17-A
	145	82
	146	65
CLAMP,SPRING/4	172	3
CLAMP,WINKER B	62	40
	128	17
	170	7
	171	7
CLAMP/32	3	28
CLAMP/WIRE/10-15	5	24
CLAMP/WIRE/36-44	5	14
CLAMP/WIRE/49-60	5	22
CLAMP/WORM/16-25	61	15
	61	21
	62	15
	62	20
	63	15
	63	23
CLAMP/WORM/20-32	6	13
	11	8-A
	61	6
	62	6
	63	6
CLAMP/WORM/23-35	5	13
	11	8
CLAMP/WORM/32-50	121	23
CLAMP/WORM/70-90	167	16
CLEANER,FORK	185	1
CLEANER/AIR ASSY	5	16
CLIP	5	20
CLIP,MAT/SUNSET	71	17
	72	24
CLIP,STEP MAT	63	26
	79	9
	79	17
	80	9
	80	17
	81	9
	81	16
	82	9
CLIP,STEP MAT	82	17
	85	7
CLIP/HOSE/10.4-11.1	61	12
	62	12
	63	12
CLIP/HOSE/11.1-12	4	17
	11	22
CLIP/HOSE/11.9-12.6	11	15
	11	19
	11	21
	11	25
	12	11
	121	10
CLIP/HOSE/13.8-14.8	12	11-A
CLUCH/BRAKE ASSY	28	4
CLUTCH	67	28
	68	24
	110	20
	151	30
	151	45
CLUTCH,FEEDING	169	72
	173	12
CLUTCH,FEEDING DRIVE	169	73
CLUTCH,PLANTING	67	29
	68	25
CLUTCH,ROLLER/FC-16	151	3
CLUTCH,ROLLER/FC30	160	66
CLUTCH/BRAKE ASSY	28	4-A
	28	4-B
	28	4-C
	28	4-D
CLUTCH/CHANGE/SPARSE	69	28
	70	24
CLUTCH/COUNTER/8	151	32
CLUTCH/DIFFLOCK	29	16
	30	16
CLUTCH/FIX/PZ	69	7
CLUTCH/LOCK	67	7
CLUTCH/MOVABILITY/PZ	67	8
	69	8
CLUTCH/PLANTING	69	29
	70	25
CLUTCH/SEEDLING/DRIV	151	31
COCK	6	3
COCK ASSY	5	2

Alpabetical Index

Description	Fig.	Key
COLLAR	131	9
	189	3
	189	6
COLLAR SLIDE METAL	148	25
	148	32
	149	25
	149	32
COLLAR/07X19X06	121	25
COLLAR/10X12X09	121	34
COLLAR/12X16X19	120	13
COLLAR/15X20X10	141	30
COLLAR/15X22X91	121	2
COLLAR/20X25X04	120	17
COLLAR/22X28X14	54	10
COLLAR/31X38X15	111	7-A
COLLAR/31X38X16	111	7
COLLAR/CHECK	189	6-A
COLLAR/WHEELCAP	46	2
COLLER/07X27X07	121	25-A
COLLER/32X38X15	15	21
	17	21
COLOR/11X20X08	182	5
COLUMN/LOWER/8 COMP	55	17
	55	17-A
	55	17-B
	55	17-C
COLUMN/UPPER	55	1
	55	1-A
CONNECTOR	22	8
CONTROLLER,FEEDING	163	18
CONTROLLER/PZ/8 ASSY	108	1
	108	1-A
	108	1-B
	108	1-C
	108	1-D
COOLER,OIL	61	17
	62	16
	63	16
CORRUGATED TUBE/07X0	4	20
CORRUGATED TUBE/07X1	151	72
CORRUGATED TUBE/07X7	109	22
CORRUGATETUBE/28X120	5	12
COUNTER,BLOWER CHANG	162	12
COUPLING/32X44	50	2
COUPLING/EXHAUS COMP	162	48
COUPLING/PUMP	59	6
COVER	114	4
	114	22
	131	22
	160	59
COVER ASSY	5	17
COVER(COLUMN/FRONT/P	96	40
	97	40
COVER,DITCHER	163	9
COVER,ROD	189	13
COVER/47	54	6
COVER/AIRCLEANER	5	37
COVER/AIRCLEANER/G	87	14
COVER/AUTO-MARKER	141	47
COVER/BRAKE/8	28	12
	28	12-A
COVER/COLUMN/REAR/D	96	41
	97	41
COVER/CONTROLLER	108	3
COVER/ENGINE	87	1
COVER/ENGINE/D	86	1
COVER/EXHAUST	3	20
COVER/EXHAUST/F COMP	4	6
COVER/EXHAUST/PZV8	3	20-A
COVER/EXT	4	8
COVER/FERTILEZE/8/C	166	52
COVER/FERTILEZE/8/LH	166	55
COVER/FERTILEZE/8/RH	166	56
COVER/FINALCASE/PZ8	43	5
	44	5
COVER/MARKER	141	47-A
COVER/MOTOR	72	23
COVER/MOTOR/PLANTING	72	23-A
COVER/MUFFLER	4	7
COVER/MUFFLER/G	4	9
	4	9-A
COVER/MUFFLER/G COMP	4	9-B
COVER/NEEDLE	190	18
COVER/OILCOOLER	63	25
COVER/OUT COMP	111	46
	111	46-A
COVER/PLANT/CLUTCH	67	2
	68	2
	69	2
	70	2
COVER/PLANTING/PZ/E	193	23
	194	22
	195	23
	196	22
COVER/POWER TRAIN MA	141	47-B
COVER/RADIATOR/UPPER	4	18
	4	18-A
	5	38
COVER/ROTARY/8/CENTE	111	11
	111	11-A
COVER/ROTARY/8/LH	111	33
	111	33-A
COVER/ROTARY/8/RH	111	36
	111	36-A
COVER/ROTER	110	8
COVER/SEEDING-TANK/P	145	34
	145	40
COVER/SWITCH	96	18
	97	18
COVER/TRANSPLANT/FRA	118	19
CUSHION	150	36
	193	32
	194	31
	195	32
	196	31
CUSHION,SEEDING ARM	151	55
CUSHION/08X150X03	86	2
CUSHION/08X60X03	86	3
CUSHION/ARM/PZ	193	48
	194	47
	195	48
	196	47
CUSHION/SEAT/PQZ	64	16
CUSHION/SEAT/PZ	91	8
CYLINDER/8 COMP	60	1
	60	1-A
CYLINDER/PG	128	1
DIAL/SLANT/PZ ASSY	163	25
DICTHER/PZ COMP	174	1
	175	1
	175	1-A
DIODE/3.0A	98	11
	99	13
	100	11
	101	12

Description	Fig.	Key
DUCT, EXHAUST	162	1
ELBOW/SUCTION ASSY	14	3
	15	3
	16	3
	17	3
ELEMENT ASSY	5	18
EXTENSION 850/PG	180	2
EXTENSION 870/PG	178	2
FAN	167	9
	167	9-A
FENCE/LH/PZ/SUB COMP	145	8
FENCE/OUTER/LH/ COMP	145	33
FENCE/OUTER/RH/ COMP	145	39
FENCE/RH/PZ/SUB COMP	145	9
FILTER, FUEL	11	13
FILTER, OIL	61	1
	62	1
	63	1
FILTER/FUEL	11	12
	12	10
FINGER, RIDGE CLUTCH	131	6
FINGER/14/G	193	40
	194	39
	195	40
	196	39
FLANGE, BLOWER/FG	167	10
FLANGEBOLT	1	3
	2	3
	5	4
FLAT SPRING	89	11
FLOAT STOPPER/CENTER	118	40
	118	40-A
FLOAT/CENTRE	123	1
	126	1
FLOAT/SIDE/L	136	1
	137	1
FLOAT/SIDE/ROTER	138	1
	139	1
FLOAT/SIDE/ROTER/L	138	10
	139	10
FLOAT/SIDE/ROTER/R	138	11
	139	11
FLOAT/SIDE/ROTOR/L	136	10
	137	10
FLOAT/SIDE/ROTOR/R	136	11
FLOAT/SIDE/ROTOR/R	137	11
FLOATSTOPPER/FRONT	140	1
	140	1-A
FLOATSTOPPER/FRONT/L	140	5
FLOOT/CENTER/6L	124	1
	125	1
FORK	193	28
	195	28
FORK/CHANGE	67	34
	68	30
	69	34
	70	30
FORK/CLUTCH/LH	173	6
FORK/CLUTCH/RH	173	7
FORK/OPT	188	1
FRAME(DEPTH/8) COMP	122	1
FRAME(UPPER/FRONT)	47	5
	47	5-A
	48	5
	48	5-A
FRAME, SEEDLING	88	3
	88	9
FRAME/6/PZ	150	22-A
FRAME/8	165	1
FRAME/8/CENTER COMP	166	4
	166	4-A
FRAME/8/RH COMP	166	5
FRAME/HANDRAIL/E16/L	116	1
FRAME/HANDRAIL/E16/R	116	2
FRAME/HANDRAIL/PZ/LH	115	1
FRAME/HANDRAIL/PZ/RH	115	2
FRAME/MAIN/8D COMP	48	1-A
FRAME/MAIN/8G/K COMP	47	1
	47	1-A
	47	1-B
FRAME/MAIN/8K COMP	48	1
FRAME/REAR/8 ASSY	83	3
FRAME/REAR/8G COMP	85	1
FRAME/ROLLING/8 COMP	51	1
	51	1-A
FRAME/ROTARY/8 COMP	112	1
	113	1
FRAME/ROTARY/LH COMP	112	2
	113	2
FRAME/ROTARY/RH COMP	112	3
FRAME/ROTARY/RH COMP	113	3
FRAME/SEEDLING TANK/	133	8
	134	8
	134	8-A
FRAME/SIDE/8/LH COMP	118	26
FRAME/SIDE/8/RH COMP	118	36
	118	36-A
FRAME/UPPER/REAR/8G	47	8
	47	8-A
	47	8-B
FRAME/UPPER/REAR/8K	48	8
	48	8-A
	48	8-B
FROK/PLANT COMP	193	28-A
	194	27
	195	28-A
	196	27
FRONT PLATE/SIDE/LH	148	2
	149	2
FRONT PLATE/SIDE/RH	148	3
	149	3
FRONT/DIFFCASE	29	1-A
	30	1
FUSE, SLOW BLOW	98	15
	100	15
FUSE/BLADE/32V03A	98	12
	99	14
	100	12
	101	13
FUSE/BLADE/32V05A	98	3
	99	3
	100	3
	101	3
FUSE/BLADE/32V10A	98	2
	99	2
	100	2
	101	2
FUSE/BLADE/32V20A	98	7
	99	8
	100	7
	101	8
FUSE/SLOWBLOW	98	6
	98	16
	99	6
	99	11

Alpabetical Index

Description	Fig.	Key
FUSE/SLOWBLOW	100	6
	100	16
	101	6
	101	10
GASKET	3	17
	131	23
	191	24
	192	24
	193	24
	194	23
	195	24
	196	23
GASKET/HOPPER/PG	197	53
	198	38
GAUGE/FUEL/0-57 ASSY	11	3-A
	12	2
GAUGE/FUEL10-57 ASSY	11	3
GEAR	193	10
	195	10
GEAR 28-8	183	1
GEAR, BEVEL/10	114	11
GEAR, BEVEL/15T	118	7
GEAR, BEVEL/20	114	12
GEAR, COUNTER	193	8
	194	8
	195	8
	196	8
GEAR, EXHAUST	162	37
GEAR, EXHAUST SHUTTER	169	30
	169	62
GEAR, SPUR/11	169	70
GEAR, SPUR/13	169	12
	169	44
GEAR, SPUR/14	67	11
	68	12
	69	11
	70	12
GEAR, SPUR/15	120	2
GEAR, SPUR/15-14	67	27
	68	23
GEAR, SPUR/15-17	67	9
	68	10
GEAR, SPUR/15-27	25	3
	26	3
GEAR, SPUR/17-19	67	22
GEAR, SPUR/17-19	68	18
GEAR, STERRING ARM	38	16
GEAR, SUN/LH	193	4
	194	4
GEAR/19	67	25
	68	21
	69	25
	70	21
GEAR/AUTO-MARKER	141	31
GEAR/BEVEL/10	41	22
GEAR/BEVEL/10/G	42	21
GEAR/BEVEL/11	29	4
	30	4
	41	2
	42	2
GEAR/BEVEL/12/PZ8	31	6
	32	6
	33	7
GEAR/BEVEL/15	29	6
	30	6
GEAR/BEVEL/20	41	6
	41	6-A
	42	6
	42	6-A
GEAR/BEVEL/27	29	11
	29	11-A
GEAR/BEVEL/27/C	30	10
GEAR/BEVEL/9/C	28	1-B
GEAR/BEVEL/9/L/PZ8/R	54	8
GEAR/BEVEL/9/PZ10	28	1-A
GEAR/BEVEL/9/PZ8	28	1
GEAR/BEVEL/9/PZ8/R	54	9
GEAR/COUNTER	27	1
GEAR/LH	193	10-A
	194	10
GEAR/PLANT	67	10
	68	11
	69	10
	70	11
GEAR/REMAINDER/DISCH	162	37-A
GEAR/RH	195	10-A
	196	10
GEAR/SENSOR COMP	169	84
GEAR/SPUR/15-27	25	3-A
	26	3-A
GEAR/SPUR/16/G	24	5
GEAR/SPUR/16-14	69	27
	70	23
GEAR/SPUR/16-18	69	9
	70	10
GEAR/SPUR/17	23	5
GEAR/SPUR/18/18TIMES	120	30
GEAR/SPUR/18-19	69	22
	70	18
GEAR/SPUR/20/20TIMES	120	29
GEAR/SPUR/22/24TIMES	120	19
	120	28
GEAR/SPUR/24	25	2
GEAR/SPUR/24/18TIMES	120	18
GEAR/SPUR/24/20TIMES	120	20
GEAR/SPUR/24/28TI	183	3
GEAR/SPUR/24/G	26	2
GEAR/SPUR/28/28TIMES	183	2
GEAR/SPUR/30/PZ8	120	14
GEAR/SUN/RH	195	4
	196	4
GEAR/TURN	28	9
	28	9-A
GENERATOR, TORQUE	76	1
GREASE	179	1
GREASE, PLANTING/300G	158	3
	159	2
GREASESEAL/PZ/E	193	31
	194	30
	195	31
	196	30
GRIP	90	6
	120	27
	122	5
	135	3
	145	53
	146	36
GRIP, AXLE	162	27
GRIP/07X34	73	3
	74	3
GRIP/11X60	13	24
	112	38
	113	39
GROMMET/15X17X05	5	7
	6	5

Alpabetical Index

Description	Fig.	Key
GROMMET/20/SEEDING T	145	23
	146	13
GUARD/FRONT PLATE/LH	142	1
	142	1-A
GUARD/FRONT PLATE/RH	142	2
	142	2-A
GUIDE(ROTARY)	112	42
	113	43
GUIDE,FEED-CLUTCH	173	11
GUIDE/ADJUSUT/PZ8	160	11
GUIDE/CABLE/RH	133	11
	134	11
GUIDE/HARNESS COMP	1	1
	2	1
GUIDE/HARNESS/A	1	2
	2	2
GUIDE/HOSE/RADIATOR	5	35
GUIDE/HST	13	8
	13	8-A
GUIDE/PZ	174	3
	175	3
GUIDE/ROTER	174	2
	175	2
GUIDE/SEEDLING/LH/PZ	148	36
	149	36
	149	36-A
GUIDE/SEEDLING/RH/PZ	148	37
	149	37
HANDLE/ADJUST	160	16
HARNESS,SEEDING TANK	102	3
HARNESS,WIRE/NO.8	99	19
	101	17
HARNESS/BATTERY	104	1
HARNESS/BATTERY EART	104	2
HARNESS/BATTERY/D	103	1
HARNESS/BLOCK SENSOR	163	3
HARNESS/ENGIN/K ASSY	98	14
	100	14
HARNESS/ENGINE/ ASSY	98	14-A
	100	14-A
HARNESS/HOPPER SENSO	163	1
HARNESS/HOPPER SENSO	163	5
HARNESS/MAIN/8D ASSY	100	1
	100	1-A
	100	1-B
HARNESS/MAIN/8DK/F	98	1
	98	1-A
HARNESS/MAIN/8G ASSY	101	1-A
HARNESS/MAIN/8GK	101	1
HARNESS/MAIN/8GK/F	99	1
	99	1-A
HARNESS/R/REAR ASSY	98	10
	99	12
	100	10
	101	11
HARNESS/SEEDLING TAN	102	1
HARNESS/SENCER/PZ	163	8
HARNESS/SWGND	64	10
	96	24
	97	24
	163	30
	166	35
HARNESS/SWGND/5	11	6
	12	5
HARNESS/THERMO ASSY	98	18
	100	18
HARNESS/WINKER	102	4
HOCK	197	44
	198	36
HOLDER	150	19
	150	33
	150	34
HOLDER(FUEL FILTER)	11	26
HOLDER,EXHAUST	162	39
HOLDER,RESISTANT BAR	150	9
	150	15
HOLDER,SEEDLING LOCK	150	5
HOLDER,SEEDLING UPPE	150	1
HOLDER,SEEDLONG,UPPE	151	23
	151	48
HOLDER/8/LH COMP	112	13
	113	13
HOLDER/8/RH COMP	112	14
	113	14
HOLDER/COUNTER/CENTR	151	62
HOLDER/COUNTER/LH	151	56
HOLDER/COUNTER/RH	151	57
HOLDER/JE/9-9	4	22
HOLDER/NAEOSAE COMP	150	38
HOLDER/NAEOSAE/ COMP	150	38-A
HOLDER/OUTER/LH/8K	150	11-A
	150	11-B
HOLDER/OUTER/LH/PZ	150	11
HOLDER/OUTER/RH/8K	150	12-A
	150	12-B
HOLDER/OUTER/RH/PZ	150	12
HOLDER/RESISTANTBAR	150	9-A
	150	15-A
HOLDER/ROTARY/8	112	11
	113	11
HOLDER/ROTARY/CENTER	112	9
	113	9
HOLDER/SEEDLING HOLD	150	1-A
HOLDER/STAY/UPPER	150	32
HOLDR/CABLE COMP	109	1
	109	1-A
HOOD	77	1
HOOD/MAGNET	79	5
	80	5
	81	5
	82	5
HOOD/REAR/D	78	1
HOOK	88	6
	165	8
	172	7
	197	6
	198	6
HOOK,CAP	197	13
	198	11
HOOK,COUPSULE	169	3
	169	35
HOOK,HOPPER	197	29
	198	25
HOPPER/2/RH/8	197	1
	197	2
	198	1
	198	2
HOPPER/4/K COMP	171	1
	171	1-A
	171	1-B
HOPPER/4/PZ ASSY	170	1
HOPPER/SIDE/PZ	197	21
	197	22
HOPPERCOVER/4/K COMP	198	3
	198	3-A

Alpabetical Index

Description	Fig.	Key
HOPPERCOVER/4/K COMP	198	3-B
HOPPERCOVER/4/Z COMP	197	3
HOPPERGUIDE/FG	197	54
	198	35
HOPPERNET/PZ	170	8
HOPPERNET/PZ/UPPER	171	8
HORN ASSY	105	12
	105	12-A
	106	12
	106	12-A
	107	10
	107	10-A
HOSE	61	24
	62	23
	63	28
HOSE, DUCT/8/LH	167	26
HOSE, HYDUALIC/1700	61	28-A
	63	31
HOSE/07X11X1750	11	20
HOSE/07X11X1750/20	11	23
	11	23-A
HOSE/07X11X300	11	14
HOSE/07X11X750	11	18
HOSE/08X430	132	7
HOSE/08X530	132	6
HOSE/08X600	132	3
HOSE/08X800	132	5
HOSE/1430/H	61	10
	61	10-A
	61	10-B
	62	10
	63	10
	63	10-A
	63	10-B
HOSE/14X22X1040	63	14
HOSE/14X22X1250	61	14
	62	14
HOSE/14X22X450	63	22
HOSE/14X22X60	61	20
	62	19
HOSE/14X22X870	61	19
	62	18
	63	21
HOSE/1700	61	28
	62	26
HOSE/300	61	13
	62	13
	63	13
HOSE/390	5	23
HOSE/650	4	16
HOSE/680	4	16-A
HOSE/8X11X1100	61	11
	62	11
	63	11
HOSE/AIRCLEANER	5	21
HOSE/COOLING/LOWER/6	6	7
HOSE/COOLING/UPPER/6	6	10
	6	10-A
HOSE/FERTILIZER/7	172	1
HOSE/FERTILIZER/LOWE	172	4
HOSE/FUEL/060	12	15-A
HOSE/FUEL/110	12	15
HOSE/FUEL/210	12	14-A
HOSE/FUEL/240	12	14
HOSE/FUEL/780	12	12-A
HOSE/FUEL/910	12	12
HOSE/LOWER/PZ	172	5
HOSE/RADIATOR/ROWER	5	11
	5	11-A
HOSE/RADIATOR/UPPER	5	10
	5	10-A
HOSE/RUBBER	5	28
	5	29
HOSE/SUCTION/PZ	61	5
	62	5
	63	5
HST/PZ/21 ASSY	16	1
	16	1-A
	17	1
	17	1-A
HST/PZ/23 ASSY	14	1
	14	1-A
	15	1
	15	1-A
HUB, MARKER	141	13
HUB/12X17X18	13	34
HUB/12X19X05	169	74
HUB/29X35X80	113	15
HUB/29X35X80/8L	112	15
	113	15-A
HUB/CHANGE	25	7
	26	7
HUB/CLUCH/8	28	5
HUB/CLUTCH/ROLLER/8	151	1-A
HUB/DEFF/RH	29	2
HUB/DIFF/RH COMP	29	2-A
	30	2
HUB/LOCK	160	65
HUB/PLANTING ARM	193	42
	194	41
	195	42
	196	41
HUB/PULLEY	15	14
	17	14
	17	14-A
HUB/ROLLER CLUTCH/6	151	1
HUB/ROLLER CLUTCH/DR	160	64
HUB/ROLLING/PZ8	117	5
HUB/ROTOR	111	4
HUB/ROTOR/8	111	4-A
INSULATOR	7	2
	96	27
	96	46
	97	27
	97	46
INSULATOR/20X280	6	15
INSULATOR/MOUNT/34	3	8
	3	8-A
INSULATOR/MOUNT/LH	3	7
INSULATOR/MOUNT/RH	3	9
JOINT	110	2
	128	2
JOINT BALL M08LH	13	19
	18	20
	19	20
	160	39
	160	45
JOINT BALL M08RH	13	17
	18	18
	19	18
	160	41
	160	47
JOINT, ADJUST/FLOAT	119	15
JOINT, BLOWER	167	14
	167	24

Description	Fig.	Key
JOINT,BLOWER/8	167	23
JOINT,EXHAUST	161	9
JOINT,F,SUB/PLATE	148	5
	149	5
JOINT,FEED	172	12
JOINT,FEED/DUCT	167	25
JOINT,FEEDING/LH	172	9
JOINT,FEEDING/MIDDLE	172	10
JOINT,FEEDING/RH	172	11
JOINT/6	172	13
	172	13-A
JOINT/8	172	15
JOINT/8Z	172	14
JOINT/FLOAT/E	119	15-A
JOINT/PLANTING/ COMP	67	53
	68	49
	69	53
	70	49
JOINT/REA/8/ROTARY	49	5
	49	5-A
JOINT/REAR/8D	49	1
	49	1-A
JOINT/ROTARY	111	41
JOINT/UNIVERSAL ASSY	67	47
	68	43
	69	47
	70	43
JOINTT-TYPE 2	132	10
KEY	96	13
	97	13
	120	32
KEY,05X05X18 PLUS	193	12
	194	11
	195	12
	196	11
KEY,DRIVE SHAFT	114	17
	118	6
	118	9
	120	33
KEY,SPROCKET	29	12
	143	2
	144	2
KEY/05X05X23	118	4
	120	3
	131	7
KEY/05X05X26	29	19
	30	19
KEY/05X05X35	14	13
	15	13
	16	13
	17	13
KEY/05X05X46	120	33-A
KEY/07X07X20	30	12
KEY/5X5X10	120	15
KIT/SEAL ASSY	76	2
KNOB	96	30
	96	30-A
	96	43
	97	30
	97	30-A
	97	43
	163	32
KNOB SET	86	7
	87	7
KNOB,HANDLE	145	54
	146	37
KNOB/HYDRAULIC SENSI	96	38
	97	38
KNOCK/SEND/PZ8	120	9
	120	9-A
LABEL/A MOUNT OF FER	176	1
	176	1-A
	176	1-B
LABEL/ADJYUSTMENT/RO	155	21
	156	21
LABEL/ATTENTION/BLOW	176	10
LABEL/BATTERY/K	155	24
	156	23
LABEL/CAUTION	153	7-A
	154	7-A
LABEL/CAUTION/BATTER	153	5
	154	5
LABEL/CAUTION/BELT/	153	2
	154	2
LABEL/CAUTION/CHECK/	153	1
	154	1
LABEL/CAUTION/DRIVE/	153	8
	154	8
LABEL/CAUTION/FAN/K	154	12
LABEL/CAUTION/FERTIL	176	4
LABEL/CAUTION/FERTIL	176	4-A
LABEL/CAUTION/HAND	176	9
LABEL/CAUTION/HOPPER	176	8
LABEL/CAUTION/MARKER	153	13
	154	15
LABEL/CAUTION/RESERV	154	19
LABEL/CHANGE/K	155	9
	156	9
LABEL/CLUTCH/K	155	10
	156	10
LABEL/COLUMN/REAR/8K	96	42
	97	42
LABEL/CONTROLLER/8/K	155	14
	156	14
LABEL/COUPSULE/E16	176	7
LABEL/DANGER/NO FIRE	153	7
	154	7
LABEL/DEPTH ADJUSTME	155	11
	156	11
LABEL/DIESELFUEL/K	156	19
LABEL/DISCHARGE LEVE	176	11
LABEL/ENGINE	4	13
LABEL/ENGINE/620	155	27
LABEL/ENGINE/K	98	17
	100	17
LABEL/ERRORDISPLAY/K	155	15
	156	15
LABEL/FERTILIZER EXH	176	3
LABEL/FERTILIZER/HAL	176	2
	176	2-A
	176	2-B
LABEL/FRASH	147	6
LABEL/FUSE	98	8
	99	9
	100	8
	101	9
LABEL/GASOLINE/K	155	19
LABEL/HOCK SHED/E	155	26
	156	25
LABEL/LEFT/E16	155	16
	156	16
LABEL/MANUAL/CLEANER	155	23
LABEL/OFF/E16	176	13
LABEL/OIL LEVEL/FD/E	155	28
LABEL/OIL/K	155	22

Alpabetical Index

2213-097-110-10

Description	Fig.	Key
LABEL/OIL/K	156	22
LABEL/OILING/PZ/K	153	9
	154	9
LABEL/ON/E16	176	12
LABEL/PANEL/LH/K	96	10
	97	10
LABEL/PANEL/REAR/8K	97	36
LABEL/PANEL/REAR/K	96	36
LABEL/PANEL/RH/K	96	11
	97	11
LABEL/PETROL	12	9
LABEL/PLANT/INTERVAL	157	1
LABEL/RIGHT/E16	155	17
	156	17
LABEL/ROTOR/K	155	20
	156	20
LABEL/SEEDING TANK	155	25
	156	24
LABEL/SEEDLING ADJYU	155	12
	156	12
LABEL/SEND/PZ8/K	155	18
	156	18
LABEL/SLOW BLOW	101	7
LABEL/SLOWBLOW/8FK	99	7
LABEL/SPEED/8/K	96	37
	97	37
LABEL/SWITCH	163	24
	163	24-A
LABEL/TOTALCLUTCH/K	176	14
LABEL/WARNING	153	14
	154	16
LABEL/WARNING/BRAKE/	153	10
	154	10
LABEL/WARNING/CAP/K	153	16
	154	18
LABEL/WARNING/GAS/K	153	12
	154	14
LABEL/WARNING/MUFFLE	153	6
	154	6
LABEL/WARNING/PEDAL/	153	3
	154	3
LABEL/WARNING/RADIAT	153	11
	154	11
LABEL/WARNING/SHAFT	153	15
	154	17
LABEL/WARNING/SHIELD	154	13
LABEL/WARNING/TILT L	153	4
	154	4
LAMP/MASCOT ASSY	92	1-A
LAMP/TURNSIGNAL ASSY	147	1
	147	1-A
LAMPHARNES ASSY	96	2
	97	2
LANPHEAD	95	1
LEBEL/DISTANCE/SUB/8	157	2
LEVER	55	8
	90	5
LEVER,EXHAUST	162	22
LEVER/CHANGE COMP	13	23
LEVER/DEPTH/8 COMP	122	4
LEVER/HST/E16 SET	13	1
	13	1-A
LEVER/INTERVAL/ COMP	73	2
	74	2
LEVER/LH	109	3
LEVER/PZ	73	1
	73	1-A
	73	1-B
LEVER/RH	109	4
LEVER/RIDGE CLUTCH/L	109	3-A
LEVER/RIDGE CLUTCH/R	109	4-A
LEVER/ROCK/8 COMP	166	47
LEVER/SEEDLING/PZ8	135	2
LEVER/SEND/PZ8	120	23
LEVER/SPARSE PLANTIN	74	1
	74	1-A
LEVER/TOTALCLUTCH	173	20
LIFT/8 COMP	117	1
LINK/LOWER/8ROTARY	65	1
LINK/LOWER/PZ8 ASSY	65	1-B
LINK/LOWER/PZ8COMP	65	1-A
LINK/UPPER/8/ROTARY	66	1
	66	1-A
LOCK/BRAKE	56	58
MAGNET/BRAKE	56	11
MARKER(M)	93	5
MARKER,LINED/PGP	141	17
MARKER/SIDE/8	93	1
MASCOT, CENTER	92	2
MASCOT,LAMP	92	1
MAT,REAR STEP	115	12
	116	15
MATFRONT/LH/PZ	79	2
	80	2
	81	2
	82	2
MATFRONT/RH/PZ	79	3
	80	3
	81	3
	82	3
MATSTEP/PZ	79	16
	82	16
MATSTEP/REAR/LH	85	5
MATSTEP/REAR/RH	85	6
METAL/CAM/LEAD/E18	121	15-A
	121	15-B
	121	15-C
METAL/CAM/LEAD/PZ8	121	15
METAL/EXTENSION/RH	182	7
METAL/PULLEY/HST	17	18
METAL/PULLEY/HST/W	15	18
	17	18-A
METAL/S	131	29
METAL/SLIDE	191	5
	192	5
METAL/U	182	6
MIRROR ASSY	89	2
MIRROR ASSY	89	3
MOLDING/ENGINE	155	5
	155	6
	156	5
	156	6
MOLDING/FRONT	155	8
	156	8
MOLDING/HOOD	155	3
	155	4
MONITOR PANEL/PZ/E16	96	1
	97	1
MOTER	141	45
MOTOR/PLANT	71	11
	72	12
MOTORBRUSH/FZ ASSY	167	2
	167	2-A
MOTORCAP/LARGE	167	3-A
MUFFLER COMP	3	16

Description	Fig.	Key
NEEDLE	190	17
	191	15
	192	15
NEEDLE, SEPARATION/PG	186	2
NEEDLE, WIDE/PG	187	2
NETPOCKET	91	2
NIPPLE, GREASE	65	3
	67	51
	68	47
	69	51
	70	47
	110	5
	121	19
NIPPLE, GREASE/PT1/8	51	10
NOZZLE/OIL	132	9
NUT	3	11
	3	18
	4	2
	7	3
	7	7
	13	7-A
	13	18
	13	21
	14	16
	15	33
	16	16
	17	33
	18	19
	18	22
	19	19
	19	22
	39	2
	51	5
	56	42
	64	4
	64	9
	65	12
	72	18
	86	11-A
	87	11-A
	88	7
	89	7
	89	10
	92	5
	96	23
NUT	97	23
	109	14
	111	25
	115	18
	116	21
	119	21
	121	28
	121	31
	127	4
	127	4-A
	140	3
	141	35
	145	55
	146	38
	147	4
	148	19
	148	41
	149	19
	149	41
	160	37
	160	43
	160	49
	161	7
	162	5
	162	43
	163	16
	163	29
	165	11
	166	22
	166	24
	166	34
	166	37
	167	6
	167	6-A
	167	17
	167	30
	169	87
	172	20
	172	27
	173	21
	174	7
	174	16
	175	7
	175	16
	178	8
NUT	180	5
	180	11
	193	46
	193	53
	194	45
	194	52
	195	46
	195	53
	196	45
	196	52
	197	19
	197	37
	197	42
	197	48
	197	52
	198	19
	198	31
NUT(M12X1.0)	96	17
	97	17
NUT, HOLDER	145	65
	146	48
NUT, ADJUST/F	160	10
NUT, LOCK PUSH OUT	193	34
	194	33
	195	34
	196	33
NUT, LOCKED	193	29
	194	28
	195	29
	196	28
NUT, SPEED/4	198	12-A
NUT, SPEED/P6	77	8
	95	4
NUT/FLANGE/M10	131	34
NUT/JOINT	172	21
NUT/M 6	56	10
	151	54
NUT/M 8	71	13
	72	14
NUT/M10	14	19
	15	16
	16	19
	17	16
	47	3
	48	3

Alpabetical Index

Description	Fig.	Key
NUT/M10	79	24
	80	21
	81	23
	82	22
	110	37
	133	17
	134	17
NUT/M12	3	10
	3	10-A
	36	4
	37	4
	45	4
	119	16
	178	4
	181	4
	182	15
NUT/M14	64	2
NUT/M20	105	2
	106	2
	107	2
NUT/M4	11	4
	12	3
NUT/M5	98	25
	99	22
	100	25
	105	11
	106	11
	107	9
NUT/M6	5	36
	13	29
	13	39
	38	32
	55	30
	56	52
	61	37
	62	35
	63	40
	71	15
	72	16
	84	5
	86	13
	87	13
	88	14
	103	5
	104	3
NUT/M6	104	7
	105	8
	105	14
	106	8
	106	14
	107	6
	107	12
	111	10
	111	10-A
	111	34
	111	37
	111	40
	111	44
	111	47
	112	21
	113	21
	119	26-A
	119	27
	128	11
	145	31
	146	21
	148	35
	149	35
	150	3
	150	7
	151	26
	151	40
	151	50
	151	65
	161	19
	184	5
	190	20
	194	55
	196	55
NUT/M6X1.0/LH	56	53
NUT/M8	13	20
	18	21
	19	21
	38	14
	56	43
	73	15
	74	16
	93	3
	128	4
	143	6
NUT/M8	144	6
	148	12
	149	12
	160	40
	160	46
	166	17
NUT/RING	96	14
	97	14
NUT/U/M12	55	16
NUT/WASHER	3	29
	4	5
	11	28
	13	13
	13	26
	13	36
	18	3
	19	3
	20	11
	21	13
	55	10
	55	22
	64	5
	67	57
	68	55
	69	57
	70	55
	79	26
	79	35
	80	23
	81	25
	81	33
	82	24
	84	8
	86	6
	87	4
	89	13
	91	5
	91	9
	109	2
	111	23
	111	26
	112	5
	113	5
	113	28
	115	4

Description	Fig.	Key
NUT/WASHER	115	9
	115	16
	116	4
	116	9
	116	13
	116	19
	118	41
	122	7
	123	4
	124	4
	125	4
	126	4
	127	5-A
	130	4
	130	4-A
	133	7
	134	7
	148	34
	149	34
	160	33
	166	30
OILSEAL	191	32
	192	32
OILSEAL/TC152807	121	7-A
OILSEAL/TC355511	112	19
O-RING	34	6
	67	38
	67	45
	68	34
	68	41
	69	38
	69	45
	70	34
	70	41
	76	3
	131	35
	190	13
	190	19
O-RING/G55	110	14
O-RING/G60	14	6
	15	6
	16	6
	17	6
O-RING/OR	193	20
	194	19

Description	Fig.	Key
O-RING/OR	195	20
	196	19
O-RING/P 8	22	13
O-RING/P 9	189	7
O-RING/P12	61	32
	62	30
	63	35
O-RING/P14	59	5
	189	5
	190	8
	191	27
	192	27
O-RING/P15	121	3
O-RING/P16	190	23
O-RING/P18	14	4
	15	4
	16	4
	17	4
	190	15
O-RING/P28	193	43
	194	42
	195	43
	196	42
O-RING/P38	61	3
	62	3
	63	3
O-RING/P39	14	5
	15	5
	16	5
	17	5
	59	2
O-RING/P45	51	2
O-RING/P8	190	16
ORNAMENT/DIESEL/LH	156	3
ORNAMENT/DISEL/RH	156	4
ORNAMENT/FUSE/8D/K	98	5
	100	5
ORNAMENT/FUSE/8G/K	99	5
	101	5
ORNAMENT/FZ/8	176	5
ORNAMENT/ISEKI	77	2
	155	7
	156	7
	176	6
ORNAMENT/PZ80	155	2

Description	Fig.	Key
ORNAMENT/PZ80D	156	2
ORNAMENT/SUPER Z TUR	155	13
	156	13
ORNAMENT/TYM	155	1
	156	1
ORNAMENT/ZSHIFT/K	13	4
ORNAMENTO/I/STEERING	55	15
PACKING	5	27
	11	11
	12	8
	143	3
	144	3
	189	12
PACKING, CAPSULE/LOWE	169	9
	169	41
PACKING, CAPSULE/UPPE	169	16
	169	48
PACKING, DRAIN PLUG	79	8
	80	8
	81	8
	82	8
	85	8
PACKING, ROD	189	14
PACKING/HOPPER	197	43
	198	37
PANEL/HOOD	96	9
	97	9
PAWL LEAD	121	20
PEDAL, ACCELERATOR	20	2
	21	4
PEDAL/BRAKE/LH COMP	56	1
PEDAL/BRAKE/RH COMP	56	15
PEDAL/CLUTCH COMP	56	46
PEDAL/DIFFLOCK	35	4
PIECE/FORK/PK	158	1
	159	1
PIN	13	41
	13	42
	14	10
	15	10
	16	10
	17	10
	22	10
	28	16
	29	15

Alpabetical Index

2213-097-110-10

Description	Fig.	Key
PIN	30	15
	51	9
	54	3
	55	25
	56	13
	56	22
	56	28
	56	34
	56	45
	56	55
	56	57
	67	3
	68	4
	69	3
	70	4
	71	5
	72	4
	86	8
	87	8
	109	10
	109	21
	110	46
	110	47
	118	24
	118	28
	118	32
	118	35
	118	38
	119	3
	119	4
	119	9
	119	13
	131	4
	141	38
	145	69
	146	52
	148	13
	149	13
	162	15
	162	26
	166	7
	193	35
	194	34
	195	35
	196	34
PIN 10X68	71	7
	72	6
PIN STRAIGHT	49	3
	49	7
PIN, TAPPING	145	14
	145	24
	145	35
	145	41
	145	48
	146	14
	146	31
PIN,ARM PUSH-OUT	193	37
	194	36
	195	37
	196	36
PIN,CHANGE LEVER	119	8
PIN,CLUTCH	151	42
PIN,COTTER/2.5X15/SU	141	15
PIN,COTTER/2.5X20/SU	160	75
	197	26
	198	23
PIN,COTTER/3X25/SUS	66	3-A
	66	5-A
	120	7
	131	8
	173	15
PIN,COUNTER,GEAR	193	7
	194	7
	195	7
	196	7
PIN,CUTTER/2.5X30	56	6
	56	48
PIN,FLOAT	119	7
PIN,HAIR	13	44
	166	6
	166	49
PIN,HAIR (10)	55	26
	91	7
	109	7
	112	7
	112	32
	113	7
	113	33
	123	7
	124	7
PIN,HAIR (10)	125	7
	126	7
	136	9
	136	15
	137	9
	137	15
	138	9
	138	15
	139	9
	139	15
PIN,HAIR/16	166	12
	172	8
PIN,HAIR/19	150	37
PIN,KNOCKED	145	20
	146	10
PIN,LOCK	167	12
PIN,RAIL/LOWER/OUTER	145	59
	146	42
PIN,SEAT SET	91	6
PIN,SNAP	56	37
	182	10
PIN,SNAP/6	72	30
	88	18
	150	31
PIN,SPLIT/1.6X15	112	40
	113	41
PIN,SPLIT/2 X15	150	26
PIN,SPLIT/2.5X15	20	4
	21	6
	119	12
	130	8
	145	70
	146	53
	162	13
	162	33
PIN,SPLIT/2.5X20	13	7
	15	26
	17	26
	18	14
	19	14
	71	9
	72	7
	167	15
PIN,SPLIT/2.5X25	39	3
	56	6-A

Description	Fig.	Key
PIN, SPLIT/2.5X25	56	48-A
PIN, SPLIT/3 X15	56	60
	141	4
	141	7
	151	70
PIN, SPLIT/3 X20	110	40
	110	43
	112	36
	113	37-A
	119	19
	141	26
	180	6
PIN, SPLIT/3 X25	60	3
	65	6
	66	3
	66	5
	73	11
	74	12
	90	11
	141	23
	142	5-A
PIN, SPLIT/3 X35	118	3
PIN, SPLIT/3 X40	88	5
	88	24
PIN, SPLIT/3X30	142	5
PIN, SPLIT/3X30/SUS	111	31
	111	45
PIN, SPLIT/4 X25	73	9
	74	10
PIN, SPLIT/4 X40	51	6
PIN, SPRING/6 X28 W	50	3
PIN, ST	191	41
	192	41
PIN, STAND	79	14
	80	14
	81	14
	82	14
	165	6
PIN, SUPPORT/LEVER	136	5
	136	14
	137	5
	137	14
	138	5
	138	14
	139	5

Description	Fig.	Key
PIN, SUPPORT/LEVER	139	14
PIN, TRIP-HOOK ROD	18	12
	19	12
PIN, YOKE A	90	7
PIN/+	197	12
	198	14
PIN/05X28	112	39
	113	40
PIN/06X41	88	15
PIN/06X45	162	25
PIN/08X25	120	25
PIN/08X27	56	27
	56	33
	56	44
PIN/08X55	141	3
PIN/10X070	166	13
PIN/10X108	13	12
	13	25
	13	35
	55	9
PIN/10X135	109	6
PIN/10X156	123	6
	124	6
	125	6
	126	6
PIN/10X64	56	36
	166	48
PIN/12X100	90	9
PIN/12X105	182	9
PIN/12X31	20	7
	21	9
PIN/15X187	60	2
PIN/15X53/UPPER COMP	66	2
	66	2-A
PIN/18X163	66	4
PIN/18X195	65	9
PIN/18X217/LOWE COMP	65	5
	65	5-A
PIN/41	169	10
	169	42
PIN/75	112	25
	113	24
PIN/83E16	150	28
	150	29
PIN/BEARING/FRONT PL	145	60

Description	Fig.	Key
PIN/BEARING/FRONT PL	146	43
PIN/BLOWER	161	11
PIN/CYLINDER	166	11
PIN/DRIVE/8/RH COMP	160	31
PIN/FERTILIZE/8 COMP	72	17
PIN/HAIR	20	12
	21	14
	112	26
	113	25
	113	37
	142	8
PIN/LH	194	53
PIN/LOCKED	193	50
	194	49
	195	50
	196	49
PIN/RH	196	53
PIN/SET	166	23
PIN/SNAP	73	6
	73	17
	74	6
	74	18
PIN/SNAP/08	11	2
	13	15
	13	31
	18	13
	19	13
	20	3
	21	5
	79	15
	80	15
	81	15
	82	15
	90	8
	120	26
	150	25
	165	7
PIPE	5	30
	61	9
	62	9
	63	9
PIPE/JOINT/BOOT	121	9
PIPING/PUMP/VALVE/8	61	7
	62	7
	63	7

Alpabetical Index

2213-097-110-10

Description	Fig.	Key
PIPING/VALVE/POWERST	61	8
	62	8
	63	8
PIPING/VALVE/ROLLING	61	23
	62	22
	63	27
PISTON	191	6
	191	6-A
	192	6
PIVOT	89	5
PIVOT/DIAL/8	160	4
PIVOT/DRIVE/8 COMP	160	1
PLANTER/LH/E	193	22-A
	194	21
PLANTER/RH/E	195	22-A
	196	21
PLANTING/BT/9T	47	2
	48	2
PLANTINGARM/K/L ASSY	193	21
	193	21-A
	194	20
PLANTINGARM/K/R ASSY	195	21
	195	21-A
	196	20
PLATE	11	10
	12	7
	18	5
	19	5
	56	7
	56	30
	56	39
	65	7
	109	8
	109	15
	133	12
	134	12
	135	5
	145	7
	145	26
	145	29
	145	45
	145	76
	145	77
	146	16
	146	19

Description	Fig.	Key
PLATE	146	28
	146	59
	146	60
	148	4
	148	22
	148	23
	149	4
	149	22
	149	23
	166	36
	197	5
	197	31
	197	33
	198	5
	198	27
PLATE, ARM/ROTER	110	29
PLATE, BUTTERFLY	197	8
	198	8
PLATE, CONNECTING	148	16
	149	16
PLATE, COUPSULE	169	22
	169	54
PLATE, COUPSULE/UPPER	169	32
	169	64
PLATE, EXHAUST GUIDE	162	32
PLATE, EXHAUST LEVER	162	28
PLATE, HOLDER	122	2
	135	6
PLATE, HOPPER/LH	197	11
PLATE, HOPPER/RH	197	10
PLATE, LINK	119	11
PLATE, LINK/SENSOR	119	5
PLATE, METAL	121	16
PLATE, RAIL/OUTER	145	19
	145	51
	146	9
	146	34
PLATE, RUBBER/20X25X0	170	6
	171	6
PLATE, SEEDING/8	150	23-A
PLATE, STOPPER	145	67
	146	50
PLATE, SUB STEP	115	14
	116	17
PLATE/19X85	146	4

Description	Fig.	Key
PLATE/1R/13X280	145	79
	146	62
PLATE/30X60X02	5	15
PLATE/AUTO-TURN	64	11
PLATE/BASE	111	12
PLATE/BASE/MOTOR	71	1
PLATE/BLOWER/UP	166	40
PLATE/CABLE/ROTARY8	110	35
	110	35-A
PLATE/CAUTION	5	32
PLATE/CHANBER	172	23
PLATE/CLUTCH/6	151	16
PLATE/CLUTCH/7	151	14
PLATE/CONTROL	73	14
	74	15
PLATE/CONTROLER	163	19
PLATE/COUNTER/7 COMP	151	61
PLATE/COUNTER/LIFT	56	49
PLATE/COVER/LH COMP	111	20
PLATE/COVER/LOCK	87	9
PLATE/COVER/MARKER	141	39
PLATE/COVER/RH COMP	111	21
PLATE/DRIVE/8	160	34
	160	34-A
PLATE/FERTILIZE CLUT	72	21
PLATE/FLOAT LINK/8	119	10
PLATE/FLOAT/SENSOR	119	25
PLATE/FUSE	55	27
PLATE/GUIDE/DEPTH	133	13
	134	13
PLATE/GUIDE/E12	148	38
PLATE/GUIDE/E16 COMP	149	38
PLATE/GUIDE/LEAD	121	35
PLATE/HOPPER	166	14
PLATE/HOPPER/4/P	198	10
PLATE/HST	18	7
PLATE/HST/ADJUST	18	7-A
	18	8
	19	7
PLATE/HST/ADJUST/FUL	18	8-A
	19	8
PLATE/I/14X79	112	23
PLATE/I/30X43	160	25
PLATE/INTERVAL	73	4
	74	4

Alpabetical Index

Description	Fig.	Key
PLATE/L/15X36 COMP	84	6
	84	6-A
PLATE/L/17X34	56	50
PLATE/L/55X55	58	7
PLATE/L/68X47 COMP	84	3
PLATE/LH	109	9
PLATE/LINK/8 COMP	65	7-A
PLATE/LINK/SENSOR	119	5-A
PLATE/LOCK8	86	10
PLATE/MAGNET	77	4
PLATE/MARKERSPRING	141	9
PLATE/METAL/LEAD/E18	121	16-A
PLATE/MIRROR	89	8
PLATE/OUTER/RECEIVIN	73	19
	74	20
PLATE/RAIL/8LH	148	7
	149	7
PLATE/RAIL/8RH	148	6
	149	6
PLATE/RELAY	55	28
PLATE/ROTARYCASE	110	25
	110	25-A
PLATE/RUBBER/30X50X0	6	11
PLATE/SEAT/PZ	91	4
PLATE/SEAT/PZ/8	91	4-A
PLATE/SENSORBAS COMP	164	5
PLATE/SLIDER/8 COMP	148	27
	149	27
PLATE/SLIDER/SUPPORT	148	24
	149	24
PLATE/SOIL COVERING/	174	9
	174	10
	174	11
	174	12
	175	9
	175	10
	175	11
	175	12
PLATE/SPEED COMP	73	14-A
	74	15-A
PLATE/SPRING	197	23
	198	20
PLATE/STAY/CLUTCH/C	151	18
PLATE/STAY/SEND COMP	120	24
	120	24-A
PLATE/STEP/F	168	1
PLATE/STOPPER	151	58
PLATE/STOPPER/PULLEY	14	14
	16	14
PLATE/STOPPER/TANK/8	148	28
	149	28
	149	28-A
PLATE/SUPPORT	55	20
PLATE/SUPPORT/COLUMN	55	20-A
PLATE/SUPPORT/MARKER	141	49
PLATE/SWASH	191	4
	192	4
PLATE/TENSION/K	17	23
PLATE/TENSION/W	15	23
	17	23-A
PLATE/TURN COMP	40	1
PLATE/U/19X30 COMP	56	38
PLATE/VALVE/MOTOR	191	9
	192	9
PLATE/VALVE/PUMP	191	8
	192	8
PLUG	61	31
	62	29
	63	34
	120	1
	121	18
	131	25
	189	4
	193	18
	195	18
PLUG(G3/8)	191	25
	192	25
PLUG(PF1/4)	191	26
	192	26
PLUG,OIL	54	7
PLUG,OIL 18/BRACK	118	25
PLUG/47	131	17
	183	4
PLUG/M16	190	7
PLUG/M20	190	14
	190	25
PLUG/M35	190	4
PLUG/SCREW/SEAL	22	9
	41	27
	42	26
PLUG/SCREW/SEAL	189	18
	190	26
POPPET	190	10
POPPET/CHECK	191	22
	192	22
POPPET/CHECK/1.3	191	23
	192	23
POPPET/RELIEF	191	21
	192	21
PRESSURECAP	5	3
PROTECTOR	166	58
PROTECTOR,ENGINE	6	12
	55	7
	55	23
	58	4
	62	39
	63	44
	110	45
PROTECTOR/260	86	2-A
PULLEY,TENSION	9	6
	17	28
PULLEY,TENTION 70X47	15	28
	17	28-A
PULLEY/VB111	9	1
PULLEY/VB117	17	12
PULLEY/VB117/VB117	15	12
	17	12-A
PULLEY/VB135/8G	14	12
	16	12
PULLEY/VB151	8	1
PULLEY/VB151/VB151	8	1-A
PUMP/FUEL ASSY	11	16
	12	13
PUMP/OILSET	132	1
	132	1-A
PUMP/PZ	59	1
PUSHINGOUTNUT/E	193	33
	194	32
	195	33
	196	32
R.B.B	112	16
RADIATOR ASSY	5	1
RADIATOR/G ASSY	6	1
RAIL NAE TANK/CENTER	148	1
	149	1

Alpabetical Index

2213-097-110-10

Description	Fig.	Key
RAIL(CENTER/LOWER/8)	145	5
RAIL/SEEDINGUPPER/1	145	10
RAIL/SEEDLING TANK/C	145	22
	146	12
RAKE	136	6
	136	16
	137	6
	137	16
	138	6
	138	16
	139	6
	139	16
RAKE/CENTER/LH	184	2
RAKE/CENTER/RH	184	3
RAKE/F	184	1
RAKE/PZ	129	5
RAKE/SIDE/8 COMP	130	9
REAR STEP	115	11
	116	14
RELAY ASSY	98	9
	98	13
	99	10
	99	15
	100	9
	100	13
	105	6
	106	6
RELAY/4P ASSY	105	7
	106	7
RELAY/FLASHER ASSY	105	4
	106	4
	107	4
REVER/ROTARY/8 COMP	112	37
	113	38
RING(M12X18X1)	96	16
	97	16
RING, SNAP	160	27
	160	30
	162	29
	162	38
	162	40
	162	49
	166	28
	169	11
	169	25

Description	Fig.	Key
RING, SNAP	169	31
	169	43
	169	57
	169	63
	169	77
	169	85
RING,BRUSH	169	8
	169	40
RING,CIRCLIP	31	7
	32	7
	38	5
	40	3
	114	8
	131	15
RING,CUPLING/P	50	4
RING,SNAP 19	67	24
	68	9
	68	20
	69	24
	70	9
	70	20
RING,SNAP/ 6 E	151	43
RING,SNAP/10 C	141	25-A
	145	64
	146	47
RING,SNAP/15 C	9	7
	15	27
	17	27
	114	3
	114	15
	114	21
RING,SNAP/16 C	110	16
RING,SNAP/17 C	109	19
	114	9
	118	12
	121	21
	131	11
	191	40
	192	40
RING,SNAP/18 C	33	3
RING,SNAP/20C	25	6
	26	6
	28	11
	33	6
	41	7

Description	Fig.	Key
RING,SNAP/20C	42	7
	52	3
	53	3
	54	14
	191	29
	192	29
RING,SNAP/25 C	41	4
	42	4
	67	41
	68	37
	69	41
	70	37
	110	31
	120	34
RING,SNAP/30 C	160	68
	191	39
	192	39
RING,SNAP/32 C	49	2
	49	6
	120	4
	191	31
	192	31
RING,SNAP/35 C	112	17
	113	17
RING,SNAP/40 C	38	9
RING,SNAP/42 C	52	4
	53	4
RING,SNAP/45 C	41	5
	42	5
RING,SNAP/47 C	54	12
	118	11
	120	36
	191	30
	192	30
RING,SNAP/52 C	23	4
	24	4
	28	3
	33	4
	38	13
RING,SNAP/E10	112	28
	113	29
RING,STOP	120	6
RING,STOPPER	172	16
RING/16X45X02	110	12
RING/16X50X02	110	12-A

Description	Fig.	Key
RING/O	75	9
	75	11
	76	8
	76	10
	189	16
	190	5
	190	24
	191	28
	192	28
RING/SNAP	15	22
	17	22
	38	2
	41	10
	41	11
	41	13
	41	26
	42	10
	42	11
	42	13
	42	25
	112	18
	113	18
	131	28
RIVET	93	8
RIVET, POP	145	6
	146	2
	146	23
	146	25
RIVET/BLIND	79	6
	80	6
	81	6
	82	6
RIVET/BLIND/0	197	7
	197	30
	197	32
	198	7
	198	26
RIVET/BLIND/STEEL/4X	77	5
RIVET/STEM/3.2X	145	11
	145	37
	145	43
ROD	119	14
	128	3
ROD, ADJUST/90	7	6
	15	32
ROD, ADJUST/90	17	32
ROD, JOINT/ARM	145	58
	146	41
ROD, PISTON	189	11
ROD, TIE/6	39	1
ROD/ACCELERATOR	20	6
	21	8
ROD/AUTO-RETURN	64	3
ROD/BLOWCHANG/8Z	162	14
	162	14-A
ROD/BRAKE/CONNECT	56	32
ROD/BRAKE/LH COMP	56	24
ROD/BRAKE/RH COMP	56	25
ROD/BRAKE/TURN COMP	56	40
ROD/CHANGE/UNDER	13	43
ROD/CHANGE/UPPER	13	30
ROD/DIALADJUST/8	160	6
ROD/DRIVE	160	38
ROD/EXHAUST LEVER	162	34
ROD/HST	18	17
	19	17
ROD/HST/UP	13	16
ROD/JOINT	160	44
ROD/M8X205	127	3
ROD/PARKING BRAKE	56	51
ROD/PISTON/029 SET	189	11-A
ROD/WATERWHEEL MARKE	141	12
ROHTO	172	2
ROLL	169	17
	169	49
ROLLER	110	41
ROLLER(ROTARY)	111	29
ROLLER, SEEDLING TANK	133	16
	134	16
ROLLER, SEEDLING, UPPE	151	11
ROLLER/08X13X10	18	11
	19	11
ROLLER/SEEDLING	151	7
ROTARY PLANTING/K/LH	143	1
	143	1-A
	143	1-B
ROTARY PLANTING/K/RH	144	1
	144	1-A
ROTARYPLANTING/K/RH	144	1-B
ROTER/36	111	5
ROTER/72	111	6
S.W/M6	161	17
SCREW	13	3
	14	15
	16	15
	96	6
	97	6
	160	17
	160	22
	163	13
	169	24
	169	56
	172	24
	197	16
	197	20
	197	28
	197	45
	198	16
	198	34
SCREW, SEMS	96	50
	97	50
SCREW, SP/M4X12	145	75
	146	58
SCREW, TAPPING	163	7
SCREW, TAPPING/M3	165	9
SCREW/6	79	12
	80	12
	81	12
	82	12
	174	8
	175	8
SCREW/8X25	77	3
SCREW/FLAT	148	17
	148	39
	149	17
	149	39
SCREW/M3X	167	5
	167	5-A
SCREW/M3X12	56	21
SCREW/M3X16	94	3
SCREW/M4X12	197	49
SCREW/M5X25	105	10
	106	10
	107	8
SCREW/M8X16	148	21

Alpabetical Index

2213-097-110-10

Description	Fig.	Key
SCREW/M8X16	149	21
SCREW/M8X20	148	8
	149	8
SCREW/M8X30	115	8
	116	8
SCREW/M8X35	116	8-A
SCREW/SET	169	86
SCREW/SOCET/M8X20	40	5
SCREW/SOCKET	191	42
	192	42
SCREW/SP	38	30
	56	12
	119	24
	128	10
	145	74
	146	57
	148	43
	193	26-A
	194	25
	195	26-A
	196	25
SCREW/TAPPING	91	3
	145	73
	145	80
	146	56
	146	63
SCREW/TAPPING/6X16	96	7
	96	49
	97	7
	97	49
SEAL,DUST	189	15
	193	30
	194	29
	195	30
	196	29
SEAL,OIL	34	5
	113	19
	120	37
	193	6
	193	15
	193	27
	194	6
	194	14
	194	26
	195	6

Description	Fig.	Key
SEAL,OIL	195	15
	195	27
	196	6
	196	14
	196	26
SEAL,OIL TC122207	120	12
SEAL,OIL/SC152807	121	7
SEAL,OIL/SC17306	131	31
SEAL,OIL/SD016223	151	4
SEAL,OIL/SDD7/204	54	13
SEAL,OIL/SDD730508	43	4
	44	4
SEAL,OIL/TC12257	67	35
	67	42
	68	31
	68	38
	69	35
	69	42
	70	31
	70	38
	110	30
SEAL,OIL/TC15257	71	6
	72	5
SEAL,OIL/TC15307	120	39
	169	20
	169	52
SEAL,OIL/TC17408	38	10
SEAL,OIL/TC17478	118	13
	131	5
SEAL,OIL/TC20307	72	27
	120	39-A
	169	13
	169	45
SEAL,OIL/TC20357	67	6
	67	13
	67	31
	68	7
	68	27
	69	6
	69	13
	69	31
	70	7
	70	27
SEAL,OIL/TC20428	53	5
SEAL,OIL/TC25357	27	6

Description	Fig.	Key
SEAL,OIL/TC25357	35	2
SEAL,OIL/TC255210	38	12
SEAL,OIL/TC30428	160	69
SEAL,OIL/TC30508	28	13
SEAL,OIL/TC40558	114	16
SEAL,OIL/TC506810	41	25
	42	24
SEAL,OIL/TC6-254510	110	11
SEAL,PLANTING ARM	114	2
	114	2-A
	114	13
	114	20
	114	20-A
SEAL,WHEEL SHAFT	54	21
SEAL/47	191	35
	192	35
SEAL/OIL	28	15
	33	5
	52	5
	110	24
	114	7
	191	33
	191	34
	192	33
	192	34
SEAT,HOPPER/4	197	4
SEAT/PZ ASSY	91	1
SEATHOPPER/4/P	198	4
	198	4-A
SEEDING TANK/LH	145	3
SEEDING TANK/RH	145	4
SEEDLIGHOLDER/8K/OUT	150	24
SEEDLING FRAME/4/LH/	88	1
	88	1-A
SEEDLING FRAME/4/RH/	88	2
	88	2-A
SEEDLING HOLDER/8/OU	150	24-A
SEEDLING HOLDER/PZ/E	150	22
SEEDLING TANK/CENTER	145	1
	145	1-A
	146	1
	146	1-A
	146	1-B
SEEDLING TANK/LH/8	145	32
	145	32-A

Description	Fig.	Key
SEEDLING TANK/LH/8K	146	22
	146	22-A
	146	22-B
SEEDLING TANK/RH/8	145	38
	145	38-A
SEEDLING TANK/RH/8K	146	24
	146	24-A
	146	24-B
SEEDLINGHOLDER/8/E16	150	23
SENSOR	13	37
	28	18
	164	1
SENSOR ASSY	56	18
SENSOR, ANGLE	163	6
SENSOR, HOPPPER	163	17
SENSOR/ANGLE/110/R	38	29
	119	23
	128	8
SENSOR/SLOPE ASSY	128	15
SET PLATE/NEEDLE	186	1
	187	1
SETRING/E/9	162	29-A
	162	38-A
	162	40-A
	162	49-A
SHAFT	23	1
	24	1
	67	21
	68	17
	69	21
	70	17
	151	2
	151	12
	151	13
SHAFT(CLUTCH/UETUKE/	67	20
	68	16
	69	20
	70	16
SHAFT, CHANGE	25	1
	26	1
SHAFT, CHANGE/PG	161	4
SHAFT, EXHAUST	169	27
	169	59
SHAFT, GEAR	169	80
SHAFT, PINION/DEFF	29	3
SHAFT, PINION/DEFF	30	3
SHAFT, PLANTING ARM	131	26
SHAFT, SEEDLING	151	21
	151	41
SHAFT/6/L	169	68
SHAFT/ASSISTANCE/PZ	182	11
SHAFT/BRAKE	27	8
	52	1
	53	1
SHAFT/BRAKE COMP	56	29
SHAFT/CLUTCH	67	16
	69	16
	160	62
SHAFT/COUNTER	160	72
SHAFT/COUNTER COMP	27	3
SHAFT/COUNTER/8 COMP	31	3
	32	3
SHAFT/COUNTER/8/LH	151	51
	151	51-A
SHAFT/COUNTER/8/RH	151	52
	151	52-A
SHAFT/DIFF LOCK/F	35	1
SHAFT/DISCHARGE	169	27-A
	169	59-A
SHAFT/DRIVE/8	110	18
	118	1
	118	1-A
SHAFT/DRIVE/8D COMP	31	1
	31	1-A
SHAFT/DRIVE/8G COMP	32	1
	32	1-A
SHAFT/DRIVE/8R COMP	118	2
SHAFT/EXHAUST/8Z/L	162	35
	162	35-A
SHAFT/EXHAUST/RH	162	36
	162	36-A
SHAFT/FERTILIZE CLUT	72	25
SHAFT/FERTILIZE/8RH/	169	69
	169	69-A
SHAFT/FRONT DRIVE	29	13
	30	13
SHAFT/FRONT DRIVE/RH	29	14
	30	14
SHAFT/FRONT WHEEL/8D	43	1
SHAFT/FRONT WHEEL/8G	44	1
SHAFT/HST/8 COMP	18	4
	18	4-A
	19	4
SHAFT/INPUT/PZ8	118	8
SHAFT/KINGPIN/8	41	21
	42	20
SHAFT/MOTOR	191	11
	191	11-A
	191	11-B
	192	11
SHAFT/NAEOKURI/212	151	22
SHAFT/NAEOKURI/8	151	5
SHAFT/PLANTING ARM	131	26-A
SHAFT/PLANTING ARM/L	193	9
	193	9-A
	194	9
SHAFT/PLANTING ARM/R	195	9
	195	9-A
	196	9
SHAFT/PLANTING DRIVE	50	1
SHAFT/PLANTING/8	50	1-A
SHAFT/PLANTING/OUT/P	33	1
	33	1-A
SHAFT/PLANTING/PZ8	67	50
	68	46
	69	50
	70	46
SHAFT/PLANTING-FORK	193	47
	194	46
	195	47
	196	46
SHAFT/PUMP	191	10
	191	10-A
	191	10-B
	192	10
SHAFT/PZ	68	6
	70	6
SHAFT/PZ/F	67	5
	69	5
SHAFT/REAR/COUNTER/8	54	15
SHAFT/REAR/WHEEL/8	54	18
SHAFT/REARCLUTCH/8	28	7
	28	7-A
SHAFT/ROTARY/6/CENTE	111	1
	111	1-A

Alpabetical Index

Description	Fig.	Key
SHAFT/ROTARY/8/LH	111	2
	111	2-A
SHAFT/ROTARY/8/RH	111	3
	111	3-A
SHAFT/ROTARY/OUT	111	42
SHAFT/ROTOR/FRONT/8	110	2-A
SHAFT/ROTOR/REAR	110	1
	110	1-A
SHAFT/SEND/8	120	8
SHAFT/STEERING COMP	55	12-A
SHAFT/STEERING/IN	38	1
SHAFT/STERRING	55	12
SHAFT/STERRING ARM	38	7
SHEET/METER PANEL	77	7
SHIFTER,FEEDING	110	28
SHIFTER/CHANGE	13	40
SHIFTER/SEND/PZ8	120	11
SHIFTER/SPARSE PLANT	67	40
	68	36
	69	40
	70	36
SHIM,SAFETY CLUTCH	120	16
SHIM,TIMING GEAR	118	14
SHIM/0.9	191	7
SHIM/1.8	192	7
SHIM/22X30X01	67	33
	68	29
	69	33
	70	29
SHIM/MUFFLER	3	24
	3	26
SHROUD/FD620	6	14
SHUTTER	161	8
SHUTTER,EXHAUST	169	28
	169	60
SLEEVE	190	12
SLEEVE/CAM/LEAD/8	120	31
	120	31-A
SLIDER PLATE(E12)	145	17
	145	44
	146	6
	146	26
SNAPRING	160	5
	160	9
SOCKET	95	3
SOLENOID SET	189	1
SOLENOID/090/BL	190	1
SOREN/SP/M6X25	193	3
	193	26
	194	3
	195	3
	195	26
	196	3
SORING	96	31
	96	47
	97	31
	97	47
	163	31
SPAC/M8	148	10
	149	10
SPACER,BRAKE SENSOR	56	17
SPACER/OUTER/RH	150	13
SPACER/VALVE	75	2
SPOOL	189	10
SPOOL/PILOT	190	9
SPRING	90	10
	93	2
	131	16
	142	3
	160	20
	173	22
	189	2
	189	9
SPRING,BELT/4	151	9
SPRING,BELT/8	151	10
SPRING,CONE	56	8
SPRING,HC030	151	33
	151	46
SPRING,HE071	20	5
	21	7
	110	34
SPRING,PRESS/23	130	6
SPRING/12X25X01	55	5
SPRING/HC012	190	2
SPRING/HC013	173	14
SPRING/HC016	190	11
SPRING/HC021	69	37
	69	44
	70	33
	70	40
SPRING/HC024	34	2-A
	191	20
	192	20
SPRING/HC025	34	2
SPRING/HC026	61	33
	62	31
	63	36
SPRING/HC028	67	32
	68	28
	69	32
	70	28
SPRING/HC029	141	16
SPRING/HC030	191	19
	192	19
SPRING/HC035	67	15
	69	15
SPRING/HC036	190	6
SPRING/HC037	29	17
	193	17
	194	16
	195	17
	196	16
SPRING/HC040	30	17
SPRING/HC050	21	2
SPRING/HC053	191	18
	192	18
SPRING/HC054	110	21
SPRING/HC055	167	13
SPRING/HC080	73	13
	74	14
SPRING/HC086	193	36
	194	35
	195	36
	196	35
SPRING/HC100	169	81
SPRING/HC115	169	76
SPRING/HC145/SUB	64	13
SPRING/HC170	64	12
SPRING/HC193	145	71
	146	54
SPRING/HE046	72	20
SPRING/HE050	73	18
	74	19
SPRING/HE068	18	15
	19	15

Description	Fig.	Key
SPRING/HE071	109	16
	110	49
	151	71
SPRING/HE076	112	41
	113	42
SPRING/HE079	161	20
SPRING/HE088	112	34
	113	35
SPRING/HE089	15	29
	17	29
SPRING/HE110	9	9
SPRING/HE124	56	5
	56	16
	56	47
SPRING/HE128	18	16
	19	16
SPRING/HE130	88	16
SPRING/HE138	119	2
SPRING/HE140	141	8
SPRING/HE200	112	30
	113	31
SPRING/HE232	127	1
SPRING/HE300	127	2
SPRING/HT008	162	24
SPRING/HT012	56	59
SPRING/HT015/B	136	8
	139	8
SPRING/HT015/S	137	8
	138	8
SPRING/HT016	55	11
SPRING/HT016/8LH	197	24
	198	21
SPRING/HT016/8RH	197	25
	198	22
SPRING/HT020	86	9
	87	10
SPRING/HT020/L	71	3
	72	3
	169	29
SPRING/HT020/LH	71	3-A
	72	3-A
SPRING/HT020/R	71	4
	72	9
	169	61
SPRING/HT020/RH	71	4-A
SPRING/HT020/RH	72	9-A
SPRING/HT022L	166	50
SPRING/HT022R	166	51
SPRING/HT024	72	28
SPRING/HT025	13	5
SPRING/MAKER/LH	141	11
SPRING/MAKER/RH	141	10
SPRING/SEND/PZ8	120	10
	120	10-A
SPRING/SHIFTER/P	67	37
	67	44
	68	33
	68	40
SPRING/STOP	160	21
SPROCKET/12	110	19
SPROCKET/18	131	27
SPROCKET/8/DRIVE	110	15
SPROCKET/CLUTCH/PZ8	131	12
	131	12-A
STAND COMP	142	7
STAY	10	1
	89	4
	119	1
	125	5
	126	5
	138	12
	139	12
	150	16
	165	2
STAY(SIDEFRAME)	80	16
STAY(SLIDER/RAIL_NAE	148	30
	148	31
	149	30
	149	31
STAY,ADJUST/5	160	7
STAY,BLOWER/FG	167	11
STAY,FRAME SUPPORT	88	11
	88	12
STAY,FRAME SUPPORT/O	88	17
STAY,RESERVE TANK	4	14
STAY,SEEDLING UPPER	150	8
STAY/7	160	56
STAY/AIR CHAMBER	161	12
STAY/CABLEHOOK	141	5
STAY/CENTER	48	10
STAY/CENTER	48	10-A
STAY/CENTER FLOAT/8	123	5
	124	5
STAY/COOLEROIL COMP	63	17
STAY/COVER/LH COMP	111	32
	111	32-A
STAY/COVER/RH COMP	111	35
	111	35-A
STAY/DUCT/REAR/ COMP	166	43
STAY/DUCT/REAR/7R	166	44
STAY/FLOAT/CENTER/8	123	2
	124	2
	125	2
	126	2
STAY/FRAME SUPPORT/C	88	8
STAY/FRAME/8L COMP	133	15
	134	15
STAY/FRONT PLATE/OUT	148	20
	149	20
STAY/HINGE/PZ	86	14
	87	5
STAY/HOPPER/8 COMP	170	2
	171	2
STAY/LEVER/PLANT INT	73	7
	74	7
STAY/LH	138	2
	139	2
STAY/MIRROR COMP	89	9
STAY/MUFFLER	3	27
STAY/RADIATOR/G COMP	6	4
	6	4-A
STAY/RADIATOR/L COMP	5	5
STAY/RADIATOR/R COMP	5	6
STAY/RAKE/6/LH/L	129	1
STAY/RAKE/8L COMP	129	3
STAY/RAKE/SIDE/LH	130	1
STAY/RAKE/SIDE/RH	130	2
STAY/RESERVE TANK	4	14-A
STAY/RH	138	3
	139	3
STAY/ROTARY/LH COMP	111	14
STAY/ROTARY/RH COMP	111	16
STAY/ROTOR/SPRING/8	112	29
	113	30
STAY/SEEDLING TANK/8	133	3

Alpabetical Index

2213-097-110-10

Description	Fig.	Key
STAY/SEEDLING TANK/8	134	3
STAY/SEEDLING TANK/E	133	1
	133	1-A
	133	4
	133	4-A
	134	1
	134	4
STAY/SEEDLING/8E/LH	90	1
STAY/SEEDLING/8E/RH	90	2
STAY/SEEDLING_TANK/8	133	2
	134	2
STAY/SENSOR/ROLLING	128	13
STAY/SHAFT/EXHAUST	162	44
STAY/SHIFT	34	1
	34	1-A
STAY/SIDE FLOAT/8L	136	2
	137	2
STAY/SIDE FLOAT/8R	136	3
	137	3
STAY/SIDEFLOAT/ COMP	136	12
	137	12
STAY/SIDEFRAME	79	33
	81	31
STAY/SIDESTEP COMP	90	12
	90	12-A
STAY/SIDESTEP/RHCOMP	90	13
STAY/STEP/REAR COMP	79	31
	81	29
	82	29
STAY/STEP/REAR/ COMP	79	30
	80	26
	82	28
STAY/UPPER/LH COMP	88	19
STAY/UPPER/RH COMP	88	20
STAY/WINKER/8/T	147	5
STEERING/2/380 ASSY	55	13
STEP	79	11
	79	28
	80	11
	80	18
	80	24
	81	11
	81	27
	82	26
STEP/CENTER/PZ	80	10-A
STEP/CENTER/PZ/8	79	10-A
	79	10-B
	81	10-A
	81	10-B
	82	10-A
	82	10-B
STEP/CENTER/PZ/D	79	10
	81	10
	82	10
STEP/FRONT/PZ	79	1
	80	1
	81	1
	82	1
STEP/REAR/8	79	18
	81	17
	83	1
STEP/REAR/8/E	84	1
STEP/REAR/8G	85	3
STEP/SEETHROUGH	79	11-A
	79	28-A
	80	11-A
	80	18-A
	80	24-A
	81	11-A
	81	27-A
	82	11
	82	26-A
STEP/SIDE/LH COMP	79	20
	79	20-A
	81	19
	81	19-A
	82	18
	82	18-A
STEP/SIDE/REAR COMP	79	22
	82	20
STEP/SIDE/REAR/ COMP	80	19
	81	21
STEP/SIDE/RH COMP	79	21
	79	21-A
	81	20
	81	20-A
	82	19
	82	19-A
STETSP/CENTER/PZ	80	10
STOPPER,SEED/6/K	150	27
STOPPER/CHENGE/B	13	27
STUD/M 8X25	148	9
	149	9
SUPPORT,EXHAUST LEVE	162	16
SWICTH	141	41
SWICTH,TOGGLE/3	96	15
	97	15
SWITCH ASSY	145	72
	146	55
SWITCH ASSY	94	1
SWITCH,ALTERNATOR/G	96	34
	97	34
SWITCH,PUSH	64	6
	96	20
	97	20
	109	11
	163	26
	166	31
SWITCH,SAFETY ASSY	105	1
	106	1
	107	1
SWITCH,STARTER	96	12
SWITCH/ALTERNATOR/G	96	32
	97	32
SWITCH/MAIN ASSY	97	12
	97	12-A
SWITCH/VR ASSY	96	26
	96	45
	97	26
	97	45
SWITVH/COMBI	96	25
	97	25
TANK	145	2
	145	2-A
TANK,RESERVE	5	25
TANK,SEEDING/EXTEND/	152	1
TANK/FUEL	12	1
TANK/FUEL/PZ/8	11	1
TANK/LH	145	3-A
TANK/RH	145	4-A
TAPBOLT/6X20	79	12-A
	79	29
	80	12-A
	80	25
	81	12-A

Description	Fig.	Key
TAPBOLT/6X20	81	28
	82	12-A
	82	27
TAPE, ACRYLIC FORM	197	14
	198	12
TAPPINGSCREW	108	4
THRUST/51201	28	8
TIGHTNER/SUPPORT/8LO	131	21
TIGHTNER/SUPPORT/8UP	131	19
	131	20
TIRE/650/90/LH	45	1
TIRE/650/90/RH	45	2
TORQUEGENERATOR	76	1-A
TUBE	6	8
TUBE, EXHAUST/FG8	161	1
TUBE/08X10X17	162	23
TUBE/1040	166	26
TUBE/FRAME	115	6
TUBE/HANDRAIL COMP	116	6
	116	6-A
TUBE/ROLLER	111	30
TUBE/SEEDLING PICKIN	135	1
	135	1-A
TUBE/STAY	116	11
TUBE/STAY/8 COMP	166	27
TUBE/STAY/CASE	68	52
	70	52
TUBE/STAY/DRIVE/8	160	26
TUBE/UPPER/8A COMP	88	22
UNIT/VALVE/CYLINDER/	128	1-A
VALVE	5	19
VALVE, CONTROL	61	30
	62	28
	63	33
VALVE, RELIEF	190	22
VALVE/MAIN/PZ8 ASSY	75	1
WASHER	3	25
	9	2
	9	8
	15	25
	17	25
	51	3
	56	41
	73	10
	74	11
WASHER	110	13
	112	35
	113	36
	115	7
	116	7
	117	9
	119	20
	131	10
	141	32
	141	33
	151	69
	160	13
	160	24
	160	74
	161	5
	162	3
	162	11
	162	18
	162	47
	162	51
	162	51-A
	163	14
	163	23
	164	3
	164	7
	165	4
	166	3
	166	10
	167	22
	167	29
	169	6
	169	38
	169	67
	170	3
	171	3
	172	19
	172	26
	173	5
	173	18
	174	6
	174	14
	175	6
	175	14
	197	15
	197	27
WASHER	197	34
	197	35
	197	40
	197	46
	197	50
	198	13
	198	18
	198	24
	198	28
	198	29
WASHER / M6	65	4
	67	52
	68	48
	69	52
	70	48
	110	6
	110	48
	111	9
	150	18
	150	30
	190	27
WASHER /M12	3	14
	3	14-A
	13	6
	55	6
	110	39
	119	18
	128	7
WASHER, CONN ROD	141	22
WASHER, PL/M 4	145	13
	145	25
	145	36
	145	42
	145	49
	146	15
	146	32
WASHER, PL/M 8	13	6-A
	46	5
	56	14
	56	23
	56	26
	56	54
	57	4
	73	12
	74	13

Alpabetical Index

2213-097-110-10

Description	Fig.	Key
WASHER, PL/M 8	75	5
	90	4
	110	42
	115	19
	116	22
	127	5
	148	11
	149	11
WASHER, PL/M10	121	30
WASHER, PL/M14	114	5
	114	23
WASHER, PULLEY	143	4-A
	144	4-A
WASHER, ROLLER PIN	71	8
	72	10
WASHER, SP/M 3	56	20
	94	4
	141	44
WASHER, SP/M 4	11	5
	12	4
WASHER, SP/M 6	61	38
	62	36
	63	41
	86	12
	87	12
	119	26
	121	13
	128	12
	150	17
WASHER, SP/M 8	13	22
	18	23
	19	23
	22	6
	29	9
	46	4
	57	3
	64	8
	67	19
	69	19
	75	4
	96	22
	97	22
	109	13
	111	24
	119	22

Description	Fig.	Key
WASHER, SP/M 8	128	5
	141	34
	143	5
	144	5
	147	3
	160	42
	160	48
	163	28
	166	25
	166	33
WASHER, SP/M10	3	5
	3	13
	7	5
	9	4
	10	2
	14	9
	14	18
	15	9
	15	15
	16	9
	16	18
	17	9
	17	15
	38	19
	38	22
	39	4
	41	16
	42	16
	47	4
	48	4
	51	8
	65	11
	117	8
	118	17
	121	29
	121	32
	145	56
	146	39
	178	7
	180	4
	180	10
	182	4
WASHER, SP/M12	3	12
	3	12-A
	36	5

Description	Fig.	Key
WASHER, SP/M12	45	5
	76	6
	119	17
WASHER, SP/M20	51	4
WASHER, STAND SPRING	41	8
	42	8
WASHER, TENSION	52	7
	53	7
	140	4
	143	4
	144	4
WASHER, WIRE TENSION	4	12
	56	9
	61	39
	62	37
	63	42
	86	11
	87	11
	110	33
	130	7
	141	14
	151	38
	162	19
WASHER/05X16X01	160	19
WASHER/07X19X02	38	25
WASHER/08X19X03	141	6
WASHER/09X18X03	193	51
	194	50
	195	51
	196	50
WASHER/10X19X03	121	33
WASHER/10X20X01	96	48
	97	48
WASHER/10X20X2	18	9
	19	9
WASHER/11X18X02	141	25
WASHER/11X26X03	40	4
WASHER/13X22X2	67	14
	69	14
WASHER/13X30X0.4	169	78
WASHER/13X30X01	169	78-A
WASHER/14X24X02	29	5
	30	5
WASHER/16X25X0.4	169	21
	169	53

Description	Fig.	Key
WASHER/18X29X02	66	6
WASHER/18X45X1	169	18
	169	50
WASHER/19X30X0.4	169	83
WASHER/20X25X01	67	23
	68	8
	68	19
	69	23
	70	8
	70	19
WASHER/20X32X01	142	4
WASHER/21X45X01	169	15
	169	47
WASHER/22X38X01	25	8
	26	8
WASHER/23X30X0.4	169	82
WASHER/23X30X01	169	82-A
WASHER/23X32X1.2	191	43
	192	43
WASHER/23X47X1.6	191	44
	192	44
WASHER/25X30X1	191	36
	192	36
WASHER/25X36X01	29	7
	29	18
	30	7
WASHER/26X40X03	88	23
WASHER/30X38X01	30	18
WASHER/30X40X01	160	67
WASHER/41X54X01	111	19
WASHER/6X25X2.3	121	12
WASHER/7X16X2	151	6
WASHER/AT-508	96	19
	97	19
WASHER/LOCK	3	19
	4	3
	4	11
	89	6
	148	18
	148	40
	149	18
	149	40
	160	15
	160	18
	160	23

Description	Fig.	Key
WASHER/LOCK	160	36
	160	53
	160	55
	160	58
	160	61
	161	6
	161	14
	162	4
	162	10
	162	21
	162	42
	162	46
	163	12
	163	15
	163	22
	164	4
	164	8
	165	5
	165	10
	166	9
	166	16
	166	38
	166	42
	166	54
	167	18
	167	21
	167	28
	169	5
	169	23
	169	37
	169	55
	169	66
	170	4
	171	4
	172	18
	172	25
	173	4
	173	17
	174	5
	174	15
	175	5
	175	15
	193	52
	194	51
	195	52

Description	Fig.	Key
WASHER/LOCK	196	51
	197	9
	197	18
	197	36
	197	41
	197	47
	197	51
	198	9
	198	17
	198	30
WASHER/M10	3	6
	3	15
	7	4
	65	10
	72	22
	112	8
	112	31
	113	8
	113	32
	145	57
	146	40
WASHER/M12X20X01	151	35
	160	8
WASHER/M18	193	49
	194	48
	195	49
	196	48
WASHER/M3	56	19
	77	6
	79	7
	80	7
	81	7
	82	7
	94	5
	141	43
WASHER/M6	161	18
WEIGHT,HOSE	172	6
WEIGHT/PZ	57	1
WHEEL,900/LH	37	1
WHEEL,900/RH	37	2
WHEEL/850/PG/OUT	180	1
WHEEL/852/PG/OUT	178	1
WHEEL/870/PG/IN	181	1
WHEEL/900/LH/7 COMP	182	12
WHEEL/900/OUT SET	182	1

Alpabetical Index

Description	Fig.	Key	Description	Fig.	Key	Description	Fig.	Key
WHEEL/900/RH/7 COMP	182	13						
WHEEL/950/LH COMP	36	1						
	36	1-A						
WHEEL/950/RH COMP	36	2						
	36	2-A						
WHEEL/FRONT/650/90/L	45	1-A						
WHEEL/FRONT/650/90/R	45	2-A						
WHEEL/REAR/850/LH	180	7						
WHEEL/REAR/850/RH	180	8						
WHEEL/REAR/900/LH	37	1-A						
WHEEL/REAR/900/RH	37	2-A						
WHEEL/REAR/SUB/870/P	178	5						
	181	2						
WIRE BAND(92)	132	8						
	145	81						
	146	64						
WIRE,LEAD	98	22						
	100	22						
WIRE,SEEDING GUIDE/P	148	42						
	149	42						
WIREBAND/188	121	22-A						
WRENCH,PLUG	158	2						